[redacted]

UNITED STATES INTERNATIONAL TRADE COMMISSION
WASHINGTON, D.C.

Before the Honorable Monica Bhattacharyya
Administrative Law Judge

In the Matter of CERTAIN DISPOSABLE VAPORIZER DEVICES	Inv. No. 337-TA-1410

COMPLAINANTS' RESPONSIVE CLAIM CONSTRUCTION BRIEF

[redacted]

I. INTRODUCTION 1

II. REYNOLDS'S PROPOSED CONSTRUCTIONS SHOULD BE ADOPTED 1

A. "storage compartment [being configured for storage of a liquid aerosol-forming material]" (claims 1, 3-5, 8-9) 1

B. "heater" (claims 1, 9-12, 14, 18, 25-26) 4

C. "air passageway through at least a portion of the outer housing" (claims 1, 18) 10

D. "smoking article" (all claims) 12

E. "controller" (claims 1, 14) 12

F. "ends" (claims 1, 15) 14

III. CONCLUSION 18

RAI Exhibit 2009
Ecto World v. RAI
PGR2024-00049

[redacted]

TABLE OF AUTHORITIES

Page

CASES

Baran v. Med. Device Techs., Inc.,
616 F.3d 1309 (Fed. Cir. 2010).....18

Brookhill-Wilk 1, LLC v. Intuitive Surgical, Inc.,
326 F.3d 1215 (Fed. Cir. 2003).....4

Chef Am., Inc. v. Lamb-Weston, Inc.,
358 F.3d 1371 (Fed. Cir. 2004).....10

Intamin Ltd. v. Magnetar Techs., Corp.,
483 F.3d 1328 (Fed. Cir. 2007).....18

Kopykake Enterprises, Inc. v. Lucks Co.,
264 F.3d 1377 (Fed. Cir. 2001).....5, 16

Liebel-Flarsheim Co. v. Medrad, Inc.,
358 F.3d 898 (Fed. Cir. 2004).....1, 2, 12

Littelfuse, Inc. v. Mersen USA EP Corp.,
29 F.4th 1376 (Fed. Cir. 2022).....2

Merck & Co., Inc. v. Teva Pharms. USA, Inc.,
395 F.3d 1364 (Fed. Cir. 2005).....15, 16, 17

Philip Morris Prod. S.A. v. RAI Strategic Holdings, Inc.,
No. 2022-1846, 2023 WL 5970786 (Fed. Cir. Sept. 14, 2023).....8

SSI Techs., LLC v. Dongguan Zhengyang Elec. Mech. LTD.,
59 F.4th 1328 (Fed. Cir. 2023).....16

Tate Access Floors, Inc. v. Maxcess Techs., Inc.,
222 F.3d 958 (Fed. Cir. 2000).....4

TIP Sys., LLC v. Phillips & Brooks/Gladwin, Inc.,
529 F.3d 1364 (Fed. Cir. 2008).....18

Vitronics Corp. v. Conceptronic, Inc.,
90 F.3d 1576 (Fed. Cir. 1996).....6

RAI Exhibit 2009
Ecto World v. RAI
PGR2024-00049

[redacted]

Wilson Sporting Goods Co. v. Hillerich & Bradsby Co.,
442 F.3d 1322 (Fed. Cir. 2006).....13

RAI Exhibit 2009
Ecto World v. RAI
PGR2024-00049

[redacted]

TABLE OF EXHIBITS AND ABBREVIATIONS

Exhibit Name or Abbreviation	Definition
DI	Domestic Industry
DI Products	The Reynolds's products that practice the inventions claimed in the '202 Patent: VUSE Solo, VUSE Vibe, VUSE Ciro and VUSE Alto
IPR2020-01602 FWD	IPR2020-01602 Final Written Decision (attached as Ex. 1)
JX-0001	'202 Patent (attached as Ex. 2)
POSA	Person of ordinary skill in the art
Resp. Final Inv. Conts.	Respondents' Final Invalidity Contentions (attached as Ex. 3)
Resp. In. Inv. Conts.	Respondents' Initial Invalidity Contentions (attached as Ex. 4)
Resp. Op. Cl. Constr. Br.	Respondents' Opening Claim Construction Brief (EDIS Doc. ID No. 836283)
Reynolds	Collectively, Complainants RAI Strategic Holdings Inc., R.J. Reynolds Vapor Company, RAI Services Company, and R.J. Reynolds Tobacco Company
Staff's Op. Cl. Constr. Br.	Staff's Opening Claim Construction Brief (EDIS Doc. ID No. 836980)
The '202 Patent	United States Patent No. 11,925,202

RAI Exhibit 2009
Ecto World v. RAI
PGR2024-00049

[redacted]

I. INTRODUCTION

Reynolds's proposed constructions stay true to the plain and ordinary meaning of each disputed claim term, in view of the intrinsic record. Respondents' proposed constructions do not. The non-technical language used in the claims of the '202 Patent are not unusually defined in the specification, and thus should be given their plain and ordinary meaning as set forth in Reynolds's opening brief. Neither Respondents nor Staff set forth a legal or factual basis for adopting their outcome-driven constructions which seek to rewrite the claims in violation of long-established claim construction principles. Reynolds's plain and ordinary meaning constructions should be adopted—Respondents' constructions should be rejected.

II. REYNOLDS'S PROPOSED CONSTRUCTIONS SHOULD BE ADOPTED

A. "storage compartment [being configured for storage of a liquid aerosol-forming material]" (claims 1, 3-5, 8-9)

Complainants' Proposed Construction	Respondents' Proposed Construction	Staff's Proposed Construction
Plain and ordinary meaning, which is an area where something is stored[1]	Plain and ordinary meaning, which is an enclosure where something is stored	Plain and ordinary meaning, which is an enclosure area where something is stored

As Reynolds anticipated, Respondents' refusal to accept Reynolds's proposed construction of the "storage compartment" limitation as the plain and ordinary meaning—which is an area where something is stored—was premised on Respondents' intention to attempt to improperly read in a limitation from the specification. *Liebel-Flarsheim Co. v. Medrad, Inc.*, 358 F.3d 898, 904 (Fed. Cir. 2004) ("[I]t is improper to read a limitation from the specification into the claims."). For the first time in its opening claim construction brief, Respondents proposed that the plain and

[1] Reynolds notes that in the TEO ID, the ALJ construed "storage compartment" "according to its plain and ordinary meaning, which is not limited to 'containers' that are 'configured to permit replenishment of the liquid in the smoking article.'" TEO ID at 34-37. Reynolds agrees with the ALJ's analysis and conclusion therein, and submits that Respondents have not provided any additional or different arguments that should alter that conclusion.

RAI Exhibit 2009
Ecto World v. RAI
PGR2024-00049

[redacted]

ordinary meaning of "storage compartment" is "an enclosure where something is stored." Resp. Op. Cl. Constr. Br. at 8. And while Staff has now seemingly shifted positions with regard to this claim term, such a proposed construction is nothing more than a renewal of Respondents' previous "container" limitation proposed during the TEO phase of the Investigation. For all of the reasons set forth during the TEO phase and in Reynolds's opening brief, such a limitation (whether referred to as a "container" or an "enclosure") should be rejected.

During the TEO phase, Respondents sought to import a "container" requirement into the "storage compartment" limitation. As Reynolds explained then, apart from being inconsistent with the plain language of the claim, such a requirement would also violate the principle of claim differentiation. Here, dependent claim 8 expressly recites configuring the "storage compartment" as a "container," which makes clear that the term "storage compartment" by itself is not so limited. Therefore, a "container" limitation should not be imported into claim 1 under the guise of construing "storage compartment." *Liebel-Flarsheim*, 358 F.3d at 910 ("In such a setting, where the limitation that is sought to be 'read into' an independent claim already appears in a dependent claim, the doctrine of claim differentiation is at its strongest"). Worse, configuring the storage compartment as a container is the ***only*** limitation that claim 8 adds to claim 1, so Respondents' proposed construction would render claim 8 entirely superfluous. *See Littelfuse, Inc. v. Mersen USA EP Corp.*, 29 F.4th 1376, 1380 (Fed. Cir. 2022) ("Mersen's construction would not merely render the dependent claims superfluous, but would mean that those claims would have no scope at all, a result that should be avoided when possible.")

Now, in an apparent end-around of these principles, Respondents have replaced their proposed "container" requirement with an "enclosure" requirement. But this change in words does not reflect a change in meaning or strategy, as evidenced by Respondents' reliance on

RAI Exhibit 2009
Ecto World v. RAI
PGR2024-00049

[redacted]

exactly the same portions of the specification discussing a "cartridge" and a "liquid storage container." Resp. Op. Cl. Constr. Br. at 9. Respondents' attempted sleight-of-hand in replacing their proposed "container" requirement with an "enclosure" requirement should be rejected for the same reasons.

Respondents' characterization of Reynolds's plain-and-ordinary-meaning construction as "unbounded" further misses the mark. Resp. Op. Cl. Constr. Br. at 9. The term "storage compartment" is clear and meaningful—the word "storage" indicates that the compartment is for storing something, while the word "compartment" indicates that it is a "part," an area, that provides the means for that storage. Those storage areas need not be containers or enclosures, though in some cases they may be. As Reynolds showed in its opening brief, the specification of the '202 Patent sets forth several specific examples of "storage compartments" which expressly do not require any "container" or "enclosure." For example, the aerosol-forming material can be soaked within absorbent fibrous materials or sponge-like materials. JX-0001 at 14:39-43. Such fibers or sponges are not "enclosures," yet they are "storage compartments" within the meaning of the claim language. The specification further states that, alternatively, "the aerosol-forming material can be incorporated within, or carried by, a material that acts as a substrate." *Id.* at 14:45-47. Here, too, such substrates would not fairly be categorized as "enclosures," yet substrates are expressly described as "storage compartments" in the specification. These specific examples demonstrate that "storage compartment" is not limited to the bounds of any particular "container" or "enclosure."

In sum: Respondents seek to improperly narrow the construction of "storage compartment" to only the container-type embodiments in the specification. Reynolds, by contrast, offers a construction that comports with the term's plain and ordinary meaning, that is consistent

RAI Exhibit 2009
Ecto World v. RAI
PGR2024-00049

with dependent claim 8, and that is true to the specification by embracing all—not just some—of the various embodiments expressly disclosed in the specification. *Tate Access Floors, Inc. v. Maxcess Techs., Inc.*, 222 F.3d 958, 966 (Fed. Cir. 2000) ("[A]lthough the specification may well indicate that certain embodiments are preferred, particular embodiments appearing in the specification will not be read into the claims when the claim language is broader than such embodiments."). Reynolds's construction is correct and should be adopted.

B. "heater" (claims 1, 9-12, 14, 18, 25-26)

Complainants' Proposed Construction	Respondents' Proposed Construction	Staff's Proposed Construction
Plain and ordinary meaning, which is a heating element	Plain and ordinary meaning, which is an assembly configured to heat	Plain and ordinary meaning, which is an assembly configured to heat

Reynolds set forth in its opening brief why the claims should not be rewritten—as Respondents urge—such that the "electrical resistance heater" is construed as some larger "assembly" of components.[2] There is simply ***no*** support in the intrinsic record for Respondents' proposed construction. The claims do not recite or require an "assembly." The specification does not define the "electrical resistance heater" as any sort of an "assembly." And nowhere in the specification is the term "heater" ever used to define (or even connote) some larger collective device or "assembly." In fact, the '202 Patent actually demonstrates that the exact opposite is true. As Reynolds previously showed, the specification refers to element 72 as a ***heater***. JX-0001 at

[2] Although Respondents strategically proposed that only the term "heater" be construed, the term must be construed in the context of the surrounding language. *Brookhill-Wilk 1, LLC v. Intuitive Surgical, Inc.*, 326 F.3d 1215, 1220 (Fed. Cir. 2003) ("While certain terms may be at the center of the claim construction debate, the context of the surrounding words of the claim also must be considered in determining the ordinary and customary meaning of those terms"). Here, that language—"electrical resistance"—provides additional evidence that Respondents' construction is wrong. None of the other "components" of Respondents' proposed "assembly," whatever those might be, are "electrical resistance" components. It thus makes no sense to say that they are an "electrical resistance heater."

RAI Exhibit 2009
Ecto World v. RAI
PGR2024-00049

[redacted]

22:40 ("the resistance heater 72"). The specification then repeatedly refers to element 72 as "electrical resistance heating element," "resistance heating element," and/or "resistance element." *E.g., Id.* at 21:29-39, 22:5-6, 24:38-39, 24:52, 26:2-3, 27:34, 28:2-3, 28:44-45, 29:18-19, 32:15-28. And the patent expressly states that "[l]ike numbers refer to like elements throughout." *Id.* at 8:62. Therefore, the '202 Patent demonstrates that the use of the term "heater" was intended to refer to the "electrical resistance ***heating element***." Nothing more.[3]

Neither Respondents nor Staff cite to anything in the intrinsic record demonstrating that "heater" as used in the '202 Patent means something more than the heating element itself, and includes some broader "assembly." Instead, they seek to rely on a hodgepodge of extrinsic evidence. But where no ambiguity exists, extrinsic evidence has no purpose in the claim construction process. *Kopykake Enterprises, Inc. v. Lucks Co.*, 264 F.3d 1377, 1381 (Fed. Cir. 2001) (noting that extrinsic evidence is only to be reviewed where "ambiguity remains after consideration of the intrinsic evidence").

Even if such extrinsic evidence were to be considered, however, it is not persuasive here. Respondents' two dictionary definitions, for example, never use the term "assembly"; they simply refer to devices that "produce" or "impart" heat. Neither definition even alludes to the presence of additional components—components that do ***not*** impart heat—which would be necessary to construe the "electrical resistance heater" as some sort of undefined, larger "assembly." Similarly, Respondents' reference to a conventional "space heater" has no relevance to the claim term "electrical resistance heater," as used in the context of these claims. Adding the modifier "space"

[3] While ultimately unclear, Staff appears to assign some significance to the patent's use of the phrase "heating device." *See* Staff's Op. Cl. Constr. Br. at 7. To the extent relevant, however, this only supports Reynolds's proposed construction, as the patent expressly correlates the "heating device" to a "heating element." JX-0001 at Abstract ("and a heating device (e.g., at least one electrical resistance ***heating element***") (emphasis added).

RAI Exhibit 2009
Ecto World v. RAI
PGR2024-00049

[redacted]

to "heater" creates an entirely new term, and one that denotes a specific commercial product that has all kinds of components beyond the heating element itself (in the same way that "gas heater," "home heater," and the like reflect entirely different structures). The "electrical resistance heater" disclosed in the context of the claims shares no commonality with such a device. Indeed, taking Respondents' analogy to its logical extent would mean that the ***entire smoking article*** could be a "heater." This is not what the inventors intended.

Respondents then focus the majority of their argument on extrinsic testimony from one of Reynolds's expert witnesses in an unrelated PTAB proceeding involving a different patent addressing different claims. Resp. Op. Cl. Constr. Br. at 11-13. But the testimony that Respondents rely on was not addressing the claim term—"electrical resistance heater"—at issue here, or any other claim term. And even in the unrelated context of another patent, with no relation to the claim term at issue in this Investigation, Mr. Clemens never identified anything in the specification describing a "heater assembly" as urged by Respondents. *See, e.g.*, Respondents' Ex. 3 at 76:21-77:3 ("I don't have anything specific [in Robinson discussing a larger heater]"). Mr. Clemens further confirmed that he had done no analysis to determine whether the heating elements described in the '320 Patent were instead elements of the smoking device. *Id.* at 72:11-17 ("I don't really know. … I haven't done a specific analysis of that particular question."). Finally, even if Mr. Clemens had offered testimony suggesting that a heater is some undefined "assembly," such testimony would be at odds with the intrinsic evidence disclosed in the specification (as described above) and should be ignored. *E.g.*, *Vitronics Corp. v. Conceptronic, Inc.*, 90 F.3d 1576, 1584 (Fed. Cir. 1996) (finding that "expert testimony, which was inconsistent with the specification and file history, should have been accorded no weight").

RAI Exhibit 2009
Ecto World v. RAI
PGR2024-00049

[redacted]

Reynolds further showed in its opening brief that Respondents' proposed construction would inject unnecessary and indeterminable ambiguity into the claims. A brief review of Respondents' invalidity contentions in this Investigation demonstrates that fact, as well as the outcome-driven nature of Respondents' proposed construction. Some context, however, is necessary: U.S. Patent No. 9,901,123 ("the '123 Patent"), one of the parents of the '202 Patent, includes the following limitation: "the aerosol-forming material can be wicked into contact with the electrical resistance heater." The '202 Patent includes the same limitation. In prior litigation involving the '123 Patent—including the 1199 Investigation and IPR2020-01602—Philip Morris argued that a prior art device called Ruyan, as well as a patent to Hon Lik describing a similar device, anticipated the claims of the '123 Patent. The device described in the Hon patent includes a resistance heating element that is located inside the cavity of a cylindrical component, and the cylindrical component is surrounded on its outside by a porous body. In operation, liquid is wicked to the porous body, and then it is delivered to the heating element via airflow, when a user draws on the device. This arrangement is depicted below, where the yellow arrows depict the airflow that carries liquid to the heating element located inside the cavity.

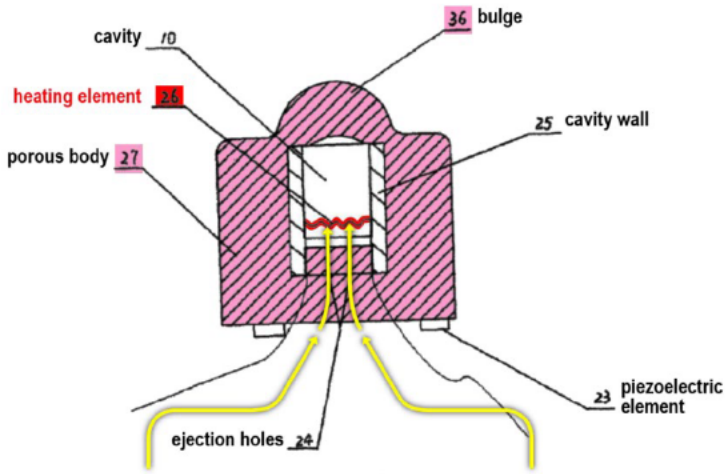

FIG. 6

IPR2020-01602 FWD at 21.

RAI Exhibit 2009
Ecto World v. RAI
PGR2024-00049

[redacted]

In the 1602 IPR, the PTAB found that the Hon patent did not anticipate the claims because it does not disclose the "wicked into contact" limitation:

> Hon, therefore, discloses wicking the liquid mixture in porous body 27 to an area that is separated from Hon's heating element 26 by atomization cavity wall 25, and that the liquid mixture is exposed to heat produced by heating element 26 only after it is driven through ejection hole 24 by the airflow generated by the user's draw. In light of these express disclosures in Hon, Petitioner does not establish that Hon's liquid mixture is wicked to an area in "close proximity" to Hon's heater, as the second part of our claim construction requires. . . . On the contrary, the evidence shows that high speed airflow created by the user's draw is necessary to propel the liquid mixture through Hon's ejection hole 24 and that atomization cavity wall 25 creates a physical separation between the liquid mixture in porous body 27 and heating element 26 that precludes the liquid mixture from being wicked into contact with an area in close proximity to, and exposed to the heat produced by, heating element 26.

Id. at 23-25. The Federal Circuit affirmed. *Philip Morris Prod. S.A. v. RAI Strategic Holdings, Inc.*, No. 2022-1846, 2023 WL 5970786 (Fed. Cir. Sept. 14, 2023). The Ruyan device (which is not actually prior art) operates in a similar manner, where the "porous body" is a metal mesh material; and in the 1199 Investigation, Staff came to the same conclusion that Ruyan did not disclose the "wicked into contact" limitation.

Now, in a transparent effort to avoid these previous conclusions, Respondents contend that everyone in both the 1199 Investigation and the 1602 IPR, including the Federal Circuit, was wrong because nobody considered that the "electrical resistance heater" limitation should be interpreted as an "assembly" of random and undefined components that includes more than just the component that heats. There is a reason, of course, that nobody from those prior cases proposed or considered this interpretation—it makes no sense. But what is worse, as Respondents' own contentions demonstrate, is that this interpretation is impossible to apply.

In their Initial Contentions in this Investigation, Respondents contended that the "electrical resistance heater" of the Ruyan device includes the metallic cloth that surrounds the cylindrical component of the device. Resp. In. Inv. Conts. at 56 ("Staff's conclusion on the wicking feature,

RAI Exhibit 2009
Ecto World v. RAI
PGR2024-00049

[redacted]

however, was based on a flawed application of the Ruyan E-Cigar, which failed to recognize that the claim's "electrical resistance heater" encompasses an assembly that contains a metallic cloth material to store and wick an aerosol forming material."). But in their Final Contentions, Respondents now contend that the "electrical resistance heater" of the Ruyan device ***does not*** include the metallic cloth (the metallic cloth is what wicks the liquid into contact with the cavity wall). Resp. Final Inv. Conts. at 57 ("Staff's conclusion on the wicking feature, however, was based on a flawed application of the Ruyan E-Cigar, which failed to recognize that the claim's 'electrical resistance heater' encompasses an assembly (including at least a cavity wall and a resistance heating element) and that a metallic cloth material stores and wicks an aerosol-forming material into contact [with] the cavity wall"). And yet, with respect to the Hon patent, Respondents contend that the "electrical resistance heater" ***should*** include the "porous body" surrounding the cylindrical wall. *Id.* at 61-62. As is readily apparent, Respondents seek a construction that is so malleable they can alter its application as they see fit in order to try to read various prior-art references onto the claims however they want. This is not the purpose of claim construction. Indeed, even Respondents cannot keep their own interpretation straight.

In sum: The '202 Patent claims an "electrical resistance heater," not some vague and undefined "heater assembly" which, under Respondents' reasoning, could be the entire claimed device. The specification reinforces that "heater" refers to a ***heating element*** used to aerosolize the e-liquid in the device. Such a meaning is consistent with how a POSA would understand the term "heater" in view of the intrinsic record—the component that heats. Respondents point ***only*** to extrinsic evidence in support of their "assembly" construction, and they have readily demonstrated the unworkability of their own construction. The claimed "electrical resistance heater" is a heating element, and the term should be construed such that no further extraneous

RAI Exhibit 2009
Ecto World v. RAI
PGR2024-00049

[redacted]

components are required. The claim construction process is not to be used as a tool for rewriting claims. *Chef Am., Inc. v. Lamb-Weston, Inc.*, 358 F.3d 1371, 1374 (Fed. Cir. 2004).

C. "air passageway through at least a portion of the outer housing" (claims 1, 18)

Complainants' Proposed Construction	Respondents' Proposed Construction	Staff's Proposed Construction
Plain and ordinary meaning, which is not limited to an opening in the outer housing	Plain and ordinary meaning, which is an opening in the outer housing through which air can flow	Plain and ordinary meaning, which is an opening in the outer housing through which air can flow

Respondents acknowledge that the specification of the '202 Patent describes different types of "air passageways." Resp. Op. Cl. Constr. Br. at 14 n.2. Yet Respondents maintain that their proposed narrowing construction—which limits the "air passageway" term to only one particular embodiment disclosed in the specification, absent any such narrowing language actually appearing in the claims—should be adopted based upon the other disclosed "air passageways" in the specification not passing ***through*** the outer housing. Respondents' proposed construction thus seeks to limit the "air passageway" limitation to only an opening that physically passes through the outer boundaries of the outer housing. Neither the claims nor the specification support such a narrow construction.

Claims 1 and 18 of the '202 Patent recite an "air passageway through at least a portion of the outer housing, the air passageway being arranged so that air drawn into the outer housing combines with volatilized liquid aerosol-forming material to produce an aerosol that can be drawn into the mouth of a user" of the device. JX-0001 at 33:7-13. The claims do not restrict the "air passageway" to only an "opening" in the outer housing. And the specification similarly does not provide any such restrictions. As Reynolds showed in its opening brief, the specification specifically sets forth numerous embodiments where the "air passageway" is distinctly ***not*** an "opening in the outer housing." *See, e.g.*, *id.* at 20:28-30, 24:34-41, 27:29-36, 29:14-20. The

RAI Exhibit 2009
Ecto World v. RAI
PGR2024-00049

[redacted]

claims do not place any restriction on the location of the claimed "air passageway."

Nothing restricts the "air passageway" from being entirely internal to the outer housing. Both the specification and the term's plainly understood meaning confirm this understanding. *First*, the specification discloses "air passageways" that are located at the edges of the outer housing (what Respondents refer to as an "opening" in the outer housing), ***but also*** "air passageways" that run ***entirely within*** the outer housing, with no terminal point at an "opening." JX-0001 at 20:28-30, 24:34-41, 27:29-36, 29:14-20. *Second*, internal passageways are commonly understood to run "through" the target object: A "passageway" may run through the interior of a building but not have terminal points entering or exiting the building; indeed, the *Oxford English Dictionary* defines "passageway" as "A way or path by which a person or thing may pass ***through***, in, or out; *spec.* a corridor or enclosed path giving access between buildings ***or to different rooms within a building***." Oxford English Dictionary, *passageway*, *available at* https://www.oed.com/dictionary/passageway_n?tab=meaning_and_use#31658452 (emphasis added). Thus, while a "passageway" *may* have external openings, such external openings are not required, and the plain and ordinary meaning of the term includes completely internal passageways.

Staff seemingly agrees with Respondents, but Staff fails to explain ***why*** such an opening-in-the-outer-housing limitation should be imported from the specification. Staff simply refers to the "context of the claim language itself and the broader specification," while failing to identify how that "context" mandates that the air passageway must include an "opening" in the outer housing. As Reynolds showed in its opening brief, the claims should not be restricted to any particular type of "air passageway"—for none of the intrinsic evidence supports such a narrowing construction.

RAI Exhibit 2009
Ecto World v. RAI
PGR2024-00049

[redacted]

In sum: The claims do not restrict the particular type of air passageway, and a POSA would understand that either, or both, of the "air passageways" disclosed in the specification (the completely internal ones and the external-opening ones) could satisfy the claim term. All that is required is that the passageway run through "at least a portion" of the outer housing. *Liebel-Flarsheim*, 358 F.3d at 904.

D. "smoking article" (all claims)

Complainants' Proposed Construction (Amended)	Respondents' Proposed Construction	Staff's Proposed Construction
Devices incorporating tobacco, including tobacco-derived components	A smoking device that possesses tobacco	Plain and ordinary meaning, which does not require presence of tobacco

The TEO ID tentatively construed the term "smoking article" to "mean devices incorporating tobacco, including tobacco-derived components." Without stating a position regarding the TEO ID's disavowal analysis, and without prejudice to Reynolds's right to argue for a different construction in other proceedings, Reynolds accepts the TEO ID's tentative construction for purposes of the permanent phase of this Investigation. To the extent Respondents or Staff contend that "smoking article" should be limited to solid tobacco, Reynolds disagrees with such a construction for all of the reasons Reynolds has previously stated in its TEO pre- and post-hearing briefing and its opening claim construction brief, as well as the reasons stated in the TEO ID (including at least at pp. 148-153).

E. "controller" (claims 1, 14)

Complainants' Proposed Construction	Respondents' Proposed Construction	Staff's Proposed Construction
Plain and ordinary meaning and does not require further narrowing by importing any exclusionary language[4]	Controller, distinct and separate from a sensor	Plain and ordinary meaning and does not require further narrowing by importing any exclusionary language

[4] Reynolds notes that in the TEO ID, the ALJ construed "controller" according to its plain and ordinary meaning, which does not impose any particular narrowing of the claimed controller.

RAI Exhibit 2009
Ecto World v. RAI
PGR2024-00049

[redacted]

Once again, the Parties presented detailed arguments during the TEO phase of the Investigation regarding whether the "controller" limitation of the independent claims should be construed as a separate structural component from the "sensor" limitation recited in subsequent dependent claims. Respondents' opening brief did not present any further arguments or evidence not previously introduced during the TEO phase of the Investigation. Resp. Op. Cl. Constr. Br. at 21-23. With all of the evidence already introduced and extensive briefing presented from each side, the Staff adopted Reynolds's position that the plain and ordinary meaning of "controller" "does not require further narrowing by importing any exclusionary language into the claim as Respondents propose." Staff's Op. Cl. Constr. Br. at 12.

Yet again, Respondents failed to rebut critical evidence presented at the TEO hearing that is fatal to their proposed construction. As an initial matter, Respondents fail to address why their evaluation of the Accused Products should influence the proper construction of the term "controller," in violation of longstanding claim construction principles. *Wilson Sporting Goods Co. v. Hillerich & Bradsby Co.*, 442 F.3d 1322, 1330–31 (Fed. Cir. 2006). This principle is best illustrated when considering the "controller" limitation of claim 1 and the "sensor" limitation of claim 13, which have different recited functions within the language of the claims themselves—the "controller" of claim 1 is "configured to ***activate current flow through the electrical resistance heater in response to a draw***," whereas the "sensor" of claim 13 is "adapted for ***sensing the draw by a user***." Respondents' expert testified during the TEO phase of the Investigation that every accused product has a pressure sensor that performs the function of the "controller" of claim 1—a point that the Staff similarly acknowledged in its opening brief, but that Respondents ignore. Tr.

TEO ID at 37-41. Reynolds agrees with the ALJ's analysis and conclusion therein, and submits that Respondents have not provided any additional or different arguments that should alter that conclusion.

RAI Exhibit 2009
Ecto World v. RAI
PGR2024-00049

[redacted]

(McAlexander) at 459:12-14, 460:1-13; Staff's Op. Cl. Constr. Br. at 12. Respondents cannot avoid infringement of claim 1 by applying flawed claim construction arguments with respect to claim 13.

In sum: The term "controller" does not require construction beyond its plain and ordinary meaning as would be readily understood by a POSA, which does not require the controller to be a separate component from the sensor.

F. "ends" (claims 1, 15)

Complainants' Proposed Construction	Respondents' Proposed Construction	Staff's Proposed Construction
Plain and ordinary meaning	Plain and ordinary meaning, which is the part of an area that lies at the boundary	Plain and ordinary meaning, which is the part of an area that lies at the boundary

Reynolds's proposed plain and ordinary meaning construction for the term "ends" is supported by the claims, the specification, and the common usage of the term. Respondents' proposed construction, in which Staff joins,[5] far exceeds any permissible scope in view of the plain meaning of the term—let alone any permissible scope in view of the claims and specification of the '202 Patent. That is precisely why Respondents are unable to support their exceedingly broad construction.

Reynolds showed in its opening brief why the claims themselves, in addition to the specification, support a plain and ordinary construction of the term that does not require any further location restrictions. Respondents' proposed construction, by contrast, fails to give meaning to every term in the claim, effectively reading the term "ends" out of the claim, as such a construction

[5] While the Staff joins Respondents' proposed construction, its brief—submitted after Reynolds's brief—fails to substantively address a number of issues. For example, the Staff failed to address Reynolds's argument that Respondents' proposed construction reads the term "ends" out of the claims entirely. Staff's brief further failed to address the common usage section of Reynolds's brief, including the proposed example identifying different "ends" of a table.

RAI Exhibit 2009
Ecto World v. RAI
PGR2024-00049

[redacted]

necessitates that every external surface of the device is an "end." *Merck & Co., Inc. v. Teva Pharms. USA, Inc.*, 395 F.3d 1364, 1372 (Fed. Cir. 2005). The claims also further recite two different "ends," which Respondents' proposed construction would eviscerate. *Id.* The specification uses the term "ends" consistent with the way it appears in the claims (JX-0001 at 8:47-49, 19:56-57, Figs. 2 and 3), which is consistent with the term's common usage.

Respondents resort to presenting cherry-picked portions of expert testimony from the TEO Hearing and extrinsic evidence from IPR proceedings involving entirely different patents in order to present their proposed construction. Reynolds presented a fulsome accounting of Mr. Wensley's TEO Hearing testimony in its opening brief, wherein he addressed how he would "define ends as when you have an object that is narrower than it is long, the two ends that are on the long ends are the ends." Tr. (Wensley) at 295:10-16. Respondents, however, present only an abbreviated excerpt devoid of any context. Mr. Wensley, immediately in response to the snippet that Respondents identified, went on to state that: "I'm taking the plain and ordinary meaning of 'end,' you know, like what are the two ends of a car. Well, it's the front and the back. What's what is the two ends of a pencil? It's the eraser and the point. Not necessarily the doors or the windows or the roof of the car. So that's what I meant by the two ends." Tr. (Wensley) at 296:16-22.

As Reynolds anticipated, Respondents seek to rely on an IPR proceeding involving a different patent, with a different specification and different claim terms, to support their proposed construction. But the PTAB in that proceeding was applying its then-applicable "broadest reasonable interpretation" standard, which differs considerably from the *Phillips* standard applied here. Respondents' reliance on the construction of a different claim term, from a different patent, having a different specification, construed under a different standard, is irrelevant to the proper construction of the term "ends" in this Investigation. The same goes for the dictionary definitions

RAI Exhibit 2009
Ecto World v. RAI
PGR2024-00049

[redacted]

which Respondents seek to rely on, which amount to nothing more than extrinsic evidence that should be given little weight in construing the term "ends" in view of the intrinsic record. *Kopykake Enterprises*, 264 F.3d at 1381.

Respondents' proposed construction is unnecessarily broad, effectively reading the term "ends" out of the claim entirely. As used within the context of the claims and the specification of the '202 Patent—and when properly ignoring the extraneous extrinsic evidence that constitutes the entirety of Respondents' argument—the term "ends" does not require construction beyond its plain and ordinary meaning as would be readily understood by a POSA.

The TEO ID takes the position that the plain and ordinary meaning of "ends," as used in the claims of the '202 Patent, corresponds to "openings" in the housing that relate to the movement of gas. TEO ID at 95-97. More specifically, the TEO ID suggests that the first end is the end closer to the user, where the air exits the device, and the second end is the end that is furthest from the user, where the air enters the device. *Id.* at 95. First, this interpretation is inconsistent with the language of the claims. The claims require the outer housing to have two ends, and then require the mouthpiece to be defined at one of those two ends. Under the TEO ID's interpretation of the claims, whereby the outflow of air ***defines*** one of the ends, this limitation—the location of the mouthpiece—becomes superfluous because the mouthpiece will ***always*** be at the location where the air exits the device. *See, e.g.*, *SSI Techs., LLC v. Dongguan Zhengyang Elec. Mech. LTD.*, 59 F.4th 1328, 1334–35 (Fed. Cir. 2023) (declining to adopt construction that would render claim terms superfluous); *Merck & Co. v. Teva Pharms. USA, Inc.*, 395 F.3d 1364, 1372 (Fed. Cir. 2005) ("A claim construction that gives meaning to all the terms of the claim is preferred over one that does not do so").

Second, such a construction leads to nonsensical results that are not consistent with the

RAI Exhibit 2009
Ecto World v. RAI
PGR2024-00049

[redacted]

way a skilled artisan would understand the term. As just one example, Respondents rely on U.S. Patent App. Pub. No. 2005/0205084 ("Gupta") in their invalidity contentions. In the Gupta device, the air ***both*** enters (at 136) ***and*** exits (at 132a) the device through the mouthpiece. As shown below in Figure 1, applying the TEO ID's construction to such a device makes no sense, and results in a mapping that not even Respondents would agree with.

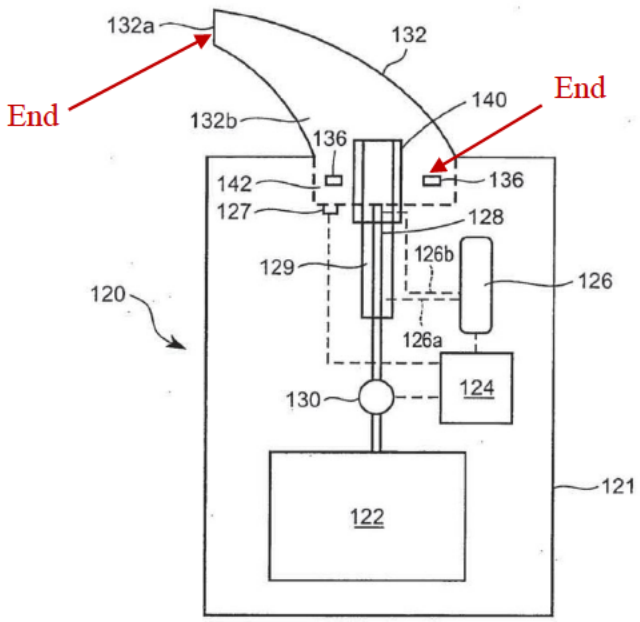

The TEO ID further states that "Reynolds' asserted construction—that the claimed 'ends' must be 'longitudinal ends'—would have the practical effect of imposing a particular shape on the outer housing, *e.g.*, an object that is narrower than it is long, which is at odds with the specification's statement that the 'dimensions and shape . . . can vary.'" TEO ID at 96. Reynolds respectfully disagrees. First, Reynolds's construction is not at odds with the specification. An object that is narrower than it is long can still vary considerably both in shape and dimension, and the specification's comment that the object's "dimensions and shape" may "vary" did not purport to encompass every imaginable variance; rather, the specification provides numerous examples of devices that are generally longer in one dimension. *See, e.g.*, JX-0001 at 19:58-62 (device "having

RAI Exhibit 2009
Ecto World v. RAI
PGR2024-00049

[redacted]

an overall length of about 11 cm and an outer diameter of about 1.5 cm"). The Accused Products in this case comprise a myriad of different shapes and dimensions, all of which are narrower than they are long.

More importantly, however, this is not a reason to reject Reynolds's proposed construction. That the specification teaches that the shape and dimensions of the device can vary does not mean that the claims must be read to cover every conceivable shape and dimension. Indeed, the law is well-established that claims do not need to be read to cover every possible embodiment. *Baran v. Med. Device Techs., Inc.*, 616 F.3d 1309, 1316 (Fed. Cir. 2010) ("It is not necessary that each claim read on every embodiment"); *Intamin Ltd. v. Magnetar Techs., Corp.*, 483 F.3d 1328, 1336–37 (Fed. Cir. 2007) ("[A] claim need not cover all embodiments"); *TIP Sys., LLC v. Phillips & Brooks/Gladwin, Inc.*, 529 F.3d 1364, 1373, 1378-79 (Fed. Cir. 2008) ("Our precedent is replete with examples of subject matter that is included in the specification, but is not claimed"). As the TEO ID recognizes, claim 17 limits the device to one that is rod shaped. Similarly, there is nothing wrong or inappropriate about concluding that claim 1 limits the device to one that has a shape that is longer in one direction than the other, and that the mouthpiece is located at one of the extents of the longitudinal lengths. This is legally appropriate, and is consistent with both the specification and the way that the claims are written.

In sum: The construction proposed in the TEO ID improperly reverses the logical relationship between the claims and their structure, prioritizing secondary features (e.g., the outflow of air) over the defined structural elements of the device. This is not how the claims are written. Reynolds's construction, which focuses on the overall shape and structural elements of the claimed device, should be adopted.

III. CONCLUSION

Reynolds's proposed constructions should be adopted.

RAI Exhibit 2009
Ecto World v. RAI
PGR2024-00049

[redacted]

Dated: November 22, 2024

Respectfully submitted,

David M. Maiorana
Ryan B. McCrum
Kenneth S. Luchesi
JONES DAY
901 Lakeside Avenue
Cleveland, OH 44114
Tel: (216) 586-3939
Fax: (216) 579-0212
Email: dmaiorana@jonesday.com
Email: rbmccrum@jonesday.com
Email: kluchesi@jonesday.com

Stephanie E. Parker
JONES DAY
1420 Peachtree Street, N.E., Suite 800
Atlanta, GA 30309
Tel: (404) 521-3939
Fax: (404) 581-8330
Email: separker@jonesday.com

John A. Marlott
JONES DAY
110 North Wacker Drive
Suite 4800
Chicago, IL 60606
Tel: (312) 782-3939
Email: jamarlott@jonesday.com

Nicole M. Smith
JONES DAY
555 South Flower Street, Fiftieth Floor
Los Angeles, CA 90071
Tel: (213) 489-3939
Email: nmsmith@jonesday.com

Counsel for Complainants
RAI Strategic Holdings, Inc.,
R.J. Reynolds Vapor Company,
R.J. Reynolds Tobacco Company,
and RAI Services Company

RAI Exhibit 2009
Ecto World v. RAI
PGR2024-00049

Certain Disposable Vaporizer Devices Investigation No. 337-TA-1410

CERTIFICATE OF SERVICE

I, Savanna Tess, hereby certify that on November 22, 2024 copies of the foregoing have been served upon the following parties as indicated:

The Honorable Monica Bhattacharyya Administrative Law Judge **U.S. International Trade Commission** 500 E Street, SW Washington, DC 20436	Via Email: Bhattacharya337@usitc.gov
The Honorable Lisa R. Barton Secretary **U.S. International Trade Commission** 500 E Street, SW Washington, DC 20436	Via EDIS
Steve Shahida Vu Bui **Office of Unfair Import Investigations** **U.S. International Trade Commission** 500 E Street, SW Washington, DC 20436	Via Email: khashayar.shahida@usitc.gov Vu.Bui@usitc.gov

Patrick J. McCarthy Brian T. Burgess Andrew Kim Lori A. Gordon Amanda E. Stephenson Danielle Fong Ruchira De Jacqueline Odum **GOODWIN PROCTER LLP** 1900 N Street, N.W. Washington, D.C. 20036 Telephone: (202) 346-4000 Molly Grammel Kathleen McGuinness **GOODWIN PROCTER LLP** 100 Northern Avenue Boston, MA 02210 Telephone: (617) 570-1000	*Counsel for Respondents Breeze Smoke, LLC and Dongguan (Shenzhen) Shikai Technology Co., Ltd.* Via Email: DG-Breeze-ptnt-ITC@goodwinlaw.com

Sanjeet K. Dutta **GOODWIN PROCTER LLP** 601 Marshall St. Redwood City, CA 94063 Telephone: (650) 752-3100 Adam J. Horowitz **GOODWIN PROCTER LLP** The New York Times Building 620 Eighth Avenue New York, New York 10018-1405 Telephone: (212) 813-8800	
Eric Allen Zelepugas Andrew Himebaugh **THOMPSON HINE LLP** 20 North Clark Street, Suite 3200 Chicago, Illinois 60602-5093 Phone: (312) 998-4240 Eric N. Heyer Meixuan (Michelle) Li Joseph A. Smith **THOMPSON HINE LLP** 1919 M Street, NW Suite 700 Washington, DC 20036 Phone: (202) 331-8800 Marla R. Butler Clint King **THOMPSON HINE LLP** Two Alliance Center 3560 Lenox Road NE, Suite 1600 Atlanta, Georgia 30326 Phone: (404) 541-2900	*Counsel for Respondents Maduro Distributors, Inc. (d/b/a The Loon) and TheSy, LLC (d/b/a Element Vape)* *Co-Counsel for SV3, LLC (d/b/a Mi-One Brands)* Via Email: th-337-1410@thompsonhine.com

Daniel E. Yonan Uma N. Everett Kyle E. Conklin Kristina Caggiano Kelly Robert E. Niemeier Ryan C. Richardson **STERNE, KESSLER, GOLDSTEIN & FOX, P.L.L.C.** 1101 K Street, NW, 10th Floor Washington, DC 20005 Telephone: 202.371.2600 Eric N. Heyer Michelle Li Joe Smith **THOMPSON HINE LLP** 1919 M Street, N.W., Suite 700 Washington, D.C. 20036-3537 Telephone: 202.331.8800 Clint King **THOMPSON HINE LLP** 3560 Lenox Rd. NE, Suite 1600 Atlanta, Georgia 30326 Telephone: 404.407.3680 Eric A. Zelepugas **THOMPSON HINE LLP** 20 N. Clark Street, Suite 3200 Chicago, IL 60602-5093 Telephone: 312.998.4240 Steven E. Adkins **FISHERBROYLES, LLP** 1200 G Street N.W., Suite 800 Washington, DC 20005 Telephone: 202.669.9630	*Counsel for Respondent SV3 LLC d/b/a Mi-One Brands* Via Email: SV3-1410@sternekessler.com

Barbara A. Murphy David F. Nickel Susan Koegel Matthew N. Duescher **FOSTER, MURPHY, ALTMAN & NICKEL, PC** 1150 18th Street, N.W., Suite 775 Washington, D.C. 20036 Telephone: (202) 822-4100 Azim Chowdhury Eric P. Gotting **KELLER AND HECKMAN LLP** 1001 G Street NW, Suite 500 West Washington, DC 20001 Telephone: (202) 434-4269 Andrew Bochner Serge Krimnus Erick Robinson Meredith Lloyd **BOCHNER PLLC** 1040 Avenue of the Americas, 15th Floor New York, New York 10018 Telephone: (646) 971-0685	*Counsel for Respondents Pastel Cartel, LLC, American Vape Company, LLC, Affiliated Imports, LLC* Via Email: FM-Pastel-1410@fostermurphy.com Email: KH-1410-Patent@khlaw.com Email: BochnerPastelItc@bochner.law
Gary M. Hnath **MAYER BROWN LLP** 1999 K Street, NW Washington, DC 20006-1101 Telephone: (202) 263-3040 Alex Liang Hao Tan Shen Wang Peter J. Curtin **ARCH & LAKE LLP** 203 N LaSalle Street, Suite 2100 Chicago, IL, 60601 Telephone: (312) 558-1368	*Counsel for Shenzhen Han Technology Co., Ltd.* Via Email: SZ-HAN-AL-337-TA-1410@archlakelaw.com

Charles C. Carson T. Cy Walker Robert Hails, Jr. Elizabeth N. Sneitzer **BAKER & HOSTETLER LLP** 1050 Connecticut Avenue, NW, Suite 1100 Washington, D.C. 20036-5403 Telephone: (202) 861-1500 Scott A. Skiles **BAKER & HOSTETLER LLP** 312 Walnut Street, Suite 3200 Cincinnati, OH 45202-4074 Telephone: (513) 929-3400	*Counsel for Respondent Bidi Vapor, LLC.* Via Email: bidi@bakerlaw.com
P. Andrew Riley Lei Mei Laurence M. Sandell Robert A. Hall Edward Naidich Guang-Yu Zhu Jiwei Zhang **MEI & MARK LLP** 818 18th Street NW, Suite 410 Washington, DC 20006 Telephone: 888-860-5678	*Counsel for Respondents Zhuhai Qisitech Co., Ltd., Guangdong Qisitech Co., Ltd., Guangdong Fuwo Intelligent Manufacturing Co., Ltd., and Guangdong Cellular Workshop Electronics Technology Co., Ltd.* Via Email: MeiMark-ITC-1410@meimark.com
Joseph V. Colaianni **FISH & RICHARDSON P.C.** 1000 Maine Avenue, S.W., Suite 1000 Washington, D.C. 20024 Telephone: (202) 783-5070 Carl E. Bruce **FISH & RICHARDSON P.C.** 1717 Main Street, Suite 5000 Dallas, Texas 75201 Telephone: (214) 747-5070 Elizabeth G.H. Ranks **FISH & RICHARDSON P.C.** One Marina Park Drive, Suite 1700, Boston, MA 02210 Telephone: (617) 542-5070 Shawn Bastani Nicholas H. Wang	*Counsel for Respondent Shenzhen Kangvape Technology Co., LTD.* Via Email: SERVICEFishKangvapeReynoldsITC@fr.com

FISH & RICHARDSON P.C. 111 Congress Avenue, Suite 2000 Austin, TX 78701 Telephone: (512) 472-5070	
Jason Xu **RIMON PC** 1050 Connecticut Ave NW, Suite 500 Washington, DC 20036 (202) 470-2141 Eric C. Cohen **RIMON PC** P.O. Box B113 150 Fayetteville St, Suite 2800 Raleigh, NC 27601-2960 (984) 960-2860 Michael F. Heafey **RIMON PC** 800 Oak Grove Avenue, Suite 250 Menlo Park, CA 94025 (650) 461-4433 John Handy 1765 Greensboro Station Place Tower I Suite 900 McLean, VA 22102 (703) 559-7360	*Counsel for Respondent Shenzhen Pingray Technology Co., Ltd.* Via Email: SZPingray337-1410@rimonlaw.com *Counsel for Respondent Shenzhen Yanyang Technology Co., Ltd.* Via Email: SZYanYang337-1410@rimonlaw.com
Jason Xu **RIMON PC** 1050 Connecticut Ave NW, Suite 500 Washington, DC 20036 (202) 470-2141	*Counsel for Respondent Shenzhen IVPS Technology Co., Ltd.* Via Email: SZIVPS337-1410@rimonlaw.com
Erik J. Dykema, Esq. **BOCHNER PLLC** 1040 Avenue of the Americas, 15th Floor New York, New York 10018 (646) 971-0685 Andrew D. Bochner, Esq. **Bochner PLLC** 1040 Avenue of the Americas, 15th Floor New York, New York 10018 (646) 971-0685	*Counsel for Respondent Price Point Distributors Inc.* Via Email: ppd-itc@bochner.law

Erick Robinson, Esq. **BOCHNER PLLC** 1040 Avenue of the Americas, 15th Floor New York, New York 10018 (646) 971-0685 Serge Krimnus, Esq. **BOCHNER PLLC** 1040 Avenue of the Americas, 15th Floor New York, New York 10018 (646) 971-0685 Meredith R. Lloyd, Esq. **BOCHNER PLLC** 1040 Avenue of the Americas, 15th Floor New York, New York 10018 (646) 971-0685	

/s/ Savanna Tess
Savanna Tess

Exhibit 1

Trials@uspto.gov
571-272-7822

Paper 32
Date: March 30, 2022

UNITED STATES PATENT AND TRADEMARK OFFICE

BEFORE THE PATENT TRIAL AND APPEAL BOARD

PHILIP MORRIS PRODUCTS, S.A.,
Petitioner,

v.

RAI STRATEGIC HOLDINGS, INC.,
Patent Owner.

IPR2020-01602
Patent 9,901,123 B2

Before MICHELLE N. ANKENBRAND, JO-ANNE M. KOKOSKI, and ELIZABETH M. ROESEL, *Administrative Patent Judges.*

KOKOSKI, *Administrative Patent Judge*.

JUDGMENT
Final Written Decision
Determining No Challenged Claims Unpatentable
35 U.S.C. § 318(a)

RAI Exhibit 2009
Ecto World v. RAI Strategic
IPR2024-01280

I. INTRODUCTION

We have jurisdiction to conduct this *inter partes* review under 35 U.S.C. § 6, and issue this Final Written Decision pursuant to 35 U.S.C. § 318(a). For the reasons that follow, we determine that Philip Morris Products, S.A. ("Petitioner") has not shown by a preponderance of the evidence that claims 1–7, 9, 11–19, 21, and 23–26 ("the challenged claims") of U.S. Patent No. 9,901,123 B2 ("the '123 patent," Ex. 1001) are unpatentable.

A. Procedural Background

Petitioner filed a Petition to institute an *inter partes* review of claims 1–7, 9, 11–19, 21, and 23–26 of the '123 patent. Paper 2 ("Pet."). RAI Strategic Holdings, Inc. ("Patent Owner") filed a Preliminary Response. Paper 6. With Board authorization, Petitioner filed a Preliminary Reply (Paper 7), and Patent Owner filed a Preliminary Sur-reply (Paper 8). Pursuant to 35 U.S.C. § 314(a), we instituted an *inter partes* review of claims 1–7, 9, 11–19, 21, and 23–26 on the grounds advanced in the Petition. Paper 9 ("Institution Decision" or "Dec."), 7, 34.

After institution of trial, Patent Owner filed a Patent Owner Response ("PO Resp.," Paper 16), Petitioner filed a Reply ("Pet. Reply," Paper 23), and Patent Owner filed a Sur-reply ("Sur-reply," Paper 25). We held an oral hearing on January 6, 2022, and a transcript is included in the record. Paper 31 ("Tr.").

B. Real Parties in Interest

Petitioner identifies Philip Morris Products, S.A., Philip Morris International, Inc., Altria Client Services LLC, and Philip Morris USA as the real parties-in-interest. Pet. 75. Patent Owner identifies RAI Strategic Holdings, Inc., R.J. Reynolds Vapor Company, RAI Innovations Company,

RAI Exhibit 2009
Ecto World v. RAI Strategic
IPR2024-01280

and R.J. Reynolds Tobacco Company as the real parties-in-interest. Paper 4, 1.

C. Related Matters

The parties indicate that the ’123 patent is involved in the following proceedings: (1) *RAI Strategic Holdings, Inc. v. Altria Client Services LLC*, No. 1:20-cv-00393-LO-TCB (E.D. Va.), and (2) *Certain Tobacco Heating Articles and Components Thereof*, U.S. International Trade Commission, Investigation No. 337-TA-1199. Pet. 75–76; Paper 4, 2.

D. The ’123 Patent

The ’123 patent is titled “Tobacco-Containing Smoking Article,” and relates to smoking articles “that produce aerosols incorporating components derived from, or provided by, tobacco,” where the aerosols “are not necessarily produced as a result of burning of tobacco.” Ex. 1001, code (54), 4:45–49. Instead, the smoking articles produce such aerosols “as a result of the application of heat upon tobacco or materials that are in contact with tobacco.” *Id*. at 4:49–52. The ’123 patent explains that the smoking articles “produce visible aerosols that are ‘smoke-like’ in nature, and exhibit many of the sensory characteristics associated with those types of smoking articles that burn tobacco.” *Id*. at 4:52–55.

Figure 1 of the ’123 patent is reproduced below.

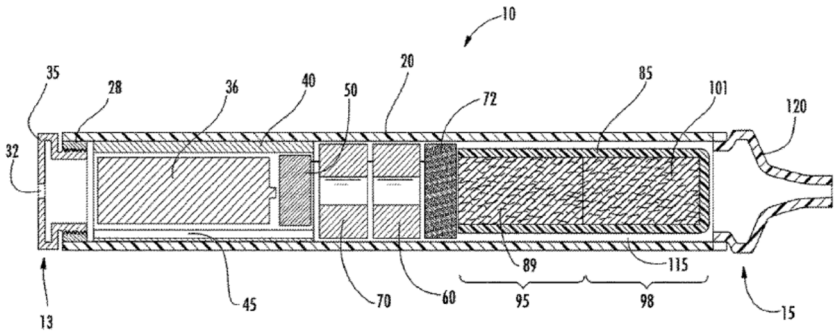

FIG. 1

RAI Exhibit 2009
Ecto World v. RAI Strategic
IPR2024-01280

Figure 1 depicts a longitudinal cross-sectional view of one embodiment of an electrically powered, tobacco-containing smoking article. Ex. 1001, 8:31–32. Smoking article 10 includes outer housing 20 that is "generally tubular in shape," and includes distal end 13 and mouth-end 15. *Id*. at 19:44–49. Control components 50 and sensor 60 are "preferably part of a puff-actuated controller adapted for regulating current flow through one or more of the" heating elements. *Id*. at 20:63–67. Resistance heating elements 70, 72 are powered by electric power source 36, controlled by electrically powered control components 50, and configured to allow airflow therethrough. *Id*. at 21:22–27. Second resistance heating unit 72 "can be formed from relatively high surface area absorbent or wicking-type materials," or

> can be employed in close proximity to an absorbent wicking material such that aerosol-forming material can be wicked or otherwise transferred so as to contact the second resistance element or contact an area in close proximity to the second resistance element (e.g., a region that is exposed to a the [*sic*] heat produced by the second resistance element).

Id. at 21:31–45. Smoking article 10 also includes cartridge 85 that contains tobacco 89 and an aerosol-forming material "in the form of an intimate mixture or provided in separate regions." *Id*. at 22:2–6.

The '123 patent explains that, during use, "[a]ir is drawn through the air passageways or openings 32 in the cap 35 located at the distal end 13 . . . and into the outer container 20." Ex. 1001, 24:20–23. The "[d]rawn air passes through air passageway 45 that extends along the length of the power source 36 and the electronic controls components 50," through an air passageway area within first heating element 70, through air flow sensing region 60, past or through second heating element 72, through an air

RAI Exhibit 2009
Ecto World v. RAI Strategic
IPR2024-01280

passageway that extends along the length of cartridge 85, and into mouth-end piece 120. *Id*. at 24:23–30. The heating elements provide surface region temperatures, and have the ability to heat the tobacco and aerosol-forming materials "in surrounding regions in the vicinity of those heating elements." *Id*. at 24:30–33. Aerosol is formed by the action of the drawn air passing the heated tobacco and aerosol-forming materials in the region of heating element 72. *Id*. at 24:39–41.

E. Illustrative Claim

Petitioner challenges claims 1–7, 9, 11–19, 21, and 23–26 of the '123 patent. Pet. 1, 3. Claims 1 and 15 are the only independent challenged claims. Claim 1 is illustrative of the claimed subject matter, and is reproduced below.

> 1. An electrically-powered, aerosol-generating smoking article comprising:
>
> [a] an electrical power source within a tubular outer housing having a mouth-end and an end distal to the mouth end;
>
> [b] at least one electrical resistance heater powered by said electrical power source;
>
> [c] a puff-actuated controller within the tubular outer housing and adapted for regulating current flow through the electrical resistance heater during draw, the controller comprising a sensor adapted for sensing draw on the smoking article by a user; and
>
> [d] a rod-shaped carrier device engaged with the mouth-end of the tubular outer housing and comprising a cartridge providing a liquid storage compartment containing a mixture comprising a tobacco extract and an aerosol-forming material absorbed within an absorbent fibrous material, the cartridge having a generally tubular shape and adapted for airflow therethrough;

RAI Exhibit 2009
Ecto World v. RAI Strategic
IPR2024-01280

> [e] wherein the rod-shaped carrier devise is operatively positioned such that, during draw, the mixture comprising the tobacco extract and the aerosol-forming material can be wicked into contact with the electrical resistance heater and volatilized to produce a visible mainstream aerosol incorporating tobacco components or tobacco-derived components that can be drawn into the mouth of the user of the smoking article.

Ex. 1001, 32:50–33:8 (bracketed labeling designated by Petitioner; *see* Pet. 18 n.3, App'x (Claim Listing)).

F. Prior Art and Asserted Grounds

Petitioner asserts that the challenged claims are unpatentable on the following grounds:

Claims Challenged	35 U.S.C.	References/Basis
1, 2, 5, 7, 9, 11, 12, 14, 15, 18, 21, 23–26	§ 103	Hon[1]
1, 2, 5, 7, 9, 11, 12, 14, 15, 18, 21, 23–26	§ 103	Hon, Brooks,[2] Whittemore[3]
3, 4, 13, 16, 17	§ 103	Hon, Whittemore, Brooks, Susa[4]
6, 19	§ 103	Hon, Whittemore, Brooks, Ray[5]

Pet. 3. Petitioner relies on the Declaration of Stewart Fox ("the Fox Declaration," Ex. 1003) in support of its contentions. Patent Owner relies on

[1] Chinese Patent No. CN 2719043 Y, published Aug. 24, 2005 (Ex. 1005, 1–13 (English translation), 16–28 (original Chinese), "Hon" or "Hon '043"). Petitioner provides an affidavit attesting to the accuracy of the translation. Ex. 1005, 14–15; *see* 37 C.F.R. § 42.63(b).
[2] U.S. Patent No. 4,947,874, issued Aug. 14, 1990 (Ex. 1006, "Brooks").
[3] U.S. Patent No. 2,057,353, issued Oct. 13, 1936 (Ex. 1007, "Whittemore").
[4] European Pat. Pub. No. EP 0845220 B1, published Sept. 3, 2003 (Ex. 1008, "Susa").
[5] U.S. Patent No. 4,284,089, issued Aug. 18, 1981 (Ex. 1009, "Ray").

RAI Exhibit 2009
Ecto World v. RAI Strategic
IPR2024-01280

the Declaration of Charles E. Clemens ("the Clemens Declaration," Ex. 2010) to support its arguments.

II. ANALYSIS

A. Level of Ordinary Skill in the Art

Factors pertinent to a determination of the level of ordinary skill in the art include "(1) the educational level of the inventor; (2) type of problems encountered in the art; (3) prior art solutions to those problems; (4) rapidity with which innovations are made; (5) sophistication of the technology; and (6) education level of workers active in the field." *Envtl. Designs, Ltd. v. Union Oil Co.*, 713 F.2d 693, 696–697 (Fed. Cir. 1983) (citing *Orthopedic Equip. Co. v. All Orthopedic Appliances, Inc.*, 707 F.2d 1376, 1381–82 (Fed. Cir. 1983)). Not all such factors may be present in every case, and one or more of these or other factors may predominate in a particular case. *Id*. Moreover, "[t]hese factors are not exhaustive but are merely a guide to determining the level of ordinary skill in the art." *Daiichi Sankyo Co. v. Apotex, Inc.*, 501 F.3d 1254, 1256 (Fed. Cir. 2007). In determining the level of ordinary skill, we may also look to the prior art, which may reflect an appropriate skill level. *Okajima v. Bourdeau*, 261 F.3d 1350, 1355 (Fed. Cir. 2001). Additionally, "[a] person of ordinary skill is also a person of ordinary creativity, not an automaton." *KSR Int'l Co. v. Teleflex, Inc.*, 550 U.S. 398, 421 (2007).

Petitioner contends that a person having ordinary skill in the art ("POSA") "would have had a Bachelor's degree in mechanical engineering, electrical engineering, chemistry, or physics, or a related field, and three to four years of industry experience," or a Master's degree in the same fields with "one to two years of industry experience." Pet. 9–10; Ex. 1003 ¶¶ 13–18. Petitioner further contends that "[s]uch a POSA would have been

RAI Exhibit 2009
Ecto World v. RAI Strategic
IPR2024-01280

familiar with electrically powered smoking articles and/or the components and underlying technology used therein." *Id*. at 10 (citing Ex. 1003 ¶¶ 13–18). Patent Owner states that, "[f]or the purposes of the trial in this proceeding," it "accepts Petitioner's proposed education and experience level of the POSA." PO Resp. 12 (citing Pet. 9–10; Ex. 2010 ¶¶ 48–50). Accordingly, we adopt Petitioner's assessment of the level of ordinary skill in the art, which is undisputed on this record and consistent with the level of skill in the art at the time of the invention as reflected in the prior art in this proceeding.

B. Claim Construction

We apply the claim construction standard articulated in *Phillips v. AWH Corp.*, 415 F.3d 1303 (Fed. Cir. 2005) (en banc). *See* 37 C.F.R. § 42.100(b) (2019). Under *Phillips*, the "words of a claim 'are generally given their ordinary and customary meaning,'" which is "the meaning that the term would have to a person of ordinary skill in the art in question at the time of the invention, i.e., as of the effective filing date of the patent application." *Phillips*, 415 F.3d at 1312–13 (quoting *Vitronics Corp. v. Conceptronic, Inc.*, 90 F3.d 1576, 1582 (Fed. Cir. 1996)). "[W]e need only construe terms 'that are in controversy, and only to the extent necessary to resolve the controversy." *Nidec Motor Corp. v. Zhongshan Broad Ocean Motor Co.*, 868 F.3d 1013, 1017 (Fed. Cir. 2017) (quoting *Vivid Techs., Inc. v. Am. Sci. & Eng'g, Inc.*, 200 F.3d 795, 803 (Fed. Cir. 1999)).

1. "wicked into contact"

Claims 1 and 15 recite, in relevant part, that "during draw, the mixture comprising the tobacco extract and the aerosol-forming material can be wicked into contact with the electrical resistance heater and volatilized." Ex. 1001, 33:2–5, 33:63–66. Patent Owner argues that "the plain and

RAI Exhibit 2009
Ecto World v. RAI Strategic
IPR2024-01280

ordinary meaning of 'wicked into contact,' as used in claims 1 and 15 of the '123 patent, is that the mixture comprising the tobacco extract and the aerosol-forming material (*i.e.*, the liquid) must be brought into contact with the electrical resistance heater by wicking." PO Resp. 10. Patent Owner argues that

> a POSA reading the specification of the '123 patent would understand that, for the embodiment where the heater is *located* in "proximity" to the wicking material, there are *multiple* options for the *manner* in which the liquid may reach (or not reach) the heater: (1) it can be "wicked . . . so as to contact" the heater; (2) it can be "otherwise transferred so as to contact" the heater; (3) it can be "wicked . . . so as to contact . . . an area in close proximity to" the heater; or (4) it can be "otherwise transferred so as to contact . . . an area in close proximity to" the heater.

Id. at 11 (citing Ex. 2010 ¶¶ 43–47) (alteration in original). According to Patent Owner, "claims 1 and 15 require the first option—'wicked so as to contact' the heater," and the claim language "does not encompass other manners of transfer, as those are explicitly described in the specification as *different* options." *Id*. (citing Ex. 2010 ¶ 46); *see also* Sur-reply 3 ("[T]he claim does ***not*** recite that the aerosol-forming material is 'wicked *or otherwise transferred* into contact' with the heater.").

Patent Owner also argues that "[i]n asserting that '[t]his claim element does not require the wick itself to contact the heater, but merely be in proximity to the heater' (Petition at 46), Petitioner improperly reads the 'mixture . . . can be wicked into contact' limitation entirely out of claims 1 and 15." PO Resp. 30–31 (second alteration in original). Patent Owner argues that "the dependent claims are directed to the *location* of the heater and the wick vis-á-vis one another, whereas claims 1 and 15 are directed to

RAI Exhibit 2009
Ecto World v. RAI Strategic
IPR2024-01280

the *manner* in which the liquid reaches the heater," and "[t]hese are different claim requirements." *Id*. at 31.

Petitioner responds that "the specification describes embodiments in which the absorbent wicking material does not contact the heater, but the aerosol-forming material is nonetheless wicked into contact with the heater," and, "[t]hus, 'wicked into contact' must allow for additional, assistive, mechanisms of liquid transport to allow the wicked liquid to contact the heater from some distance away." Pet. Reply 4 (citing Ex. 1001, 21:38–45). Therefore, Petitioner contends, "[t]he plain and ordinary meaning of the claim term allows for any number of additional methods of liquid transport, so long as the liquid is wicked and, as a result, contacts the heater." *Id*.

Having reviewed the claim language, the Specification, and the evidence from the complete record now before us, we determine that "wicked into contact with the electrical resistance heater" means "wicked into contact (1) with the heater, or (2) with an area in close proximity to, and exposed by the heat produced by, the heater." We do not adopt Patent Owner's position that "wicked into contact" requires that the liquid mixture must be brought into contact with the electrical resistance heater solely by wicking.

The Specification teaches that heating element 72 "can be formed from relatively high surface area absorbent or wicking-type materials" that "are useful for supporting or holding sufficient aerosol-forming material for aerosol generation, as well as for wicking additional aerosol-forming material for aerosol generation during subsequent puffs." Ex. 1001, 21:31–38. The Specification also teaches that heating element 72

> can be employed in close proximity to an absorbent wicking material such that aerosol-forming material can be wicked or

RAI Exhibit 2009
Ecto World v. RAI Strategic
IPR2024-01280

> otherwise transferred so as to contact the second resistance heating element or contact an area in close proximity to the second resistance heating element (e.g., a region that is exposed to a [*sic*] the heat produced by the second resistance element).

Id. at 21:39–45. The Specification goes on to teach that the "smoking article is assembled such that a certain amount of aerosol-forming material and tobacco components can be wicked or otherwise transferred to heating element 72 or the region in close proximity to the heating element." *Id*. at 22:20–24.

The Specification further teaches that the "resistance heating elements provide surface region temperatures, and hence the ability to heat aerosol-forming materials and tobacco materials in surrounding regions in the vicinity of those heating elements." Ex. 1001, 24:30–33. In that regard, the Specification describes that aerosol "is formed by the action of the drawn air passing heated tobacco components and aerosol-forming material in the region occupied by the second heating element 72" and is then "drawn through the mouth-end piece 120, and into the mouth of the smoker." *Id*. at 24:39–43.

Because volatilization occurs by exposure to and/or contact with the heating element, these disclosures in the Specification indicate that the mixture comprising the tobacco extract and the aerosol-forming material must be exposed to the heat produced by the heater. According to the Specification, this is accomplished when the absorbent fibrous or wicking material either contacts the heater, or contacts an area in close proximity to the heater. The Specification, therefore, conveys the necessity of the liquid mixture being wicked to an area that either contacts the heater, or that is close enough to the heater to be exposed to its heat.

RAI Exhibit 2009
Ecto World v. RAI Strategic
IPR2024-01280

Additional recitations found in the dependent claims further confirm that "wicked into contact with the electrical resistance heater" as used in claims 1 and 15 encompasses both wicking into contact with the heater, and wicking into contact with an area in close proximity to the heater. *See Philips*, 415 F.3d at 1314 ("Other claims of the patent in question, both asserted and unasserted, can also be valuable sources of enlightenment as to the meaning of a claim term."). Dependent claims 14, 24, and 25 are set forth below.

> 14. The smoking article of claim 1, wherein the absorbent fibrous material is in contact with the electrical resistance heater.
>
> 24. The smoking article of claim 15, wherein the absorbent wicking material is in contact with the electrical resistance heater.
>
> 25. The smoking article of claim 15, wherein the absorbent wicking material is positioned in proximity to the at least one electrical resistance heater.

Ex. 1001, 33:38–40, 34:23–28. These dependent claims, which are directed to the location of the heater in relation to the wicking material, also include the manner in which the liquid reaches the heater recited in the independent claims. Claims 14 and 24, therefore, require that the liquid be wicked into contact with the heater *and* the wicking material be in contact with the heater. Claim 25 requires that the liquid be wicked into contact with the heater *and* the wicking material be positioned in proximity to the heater. Because claims 14, 24, and 25 are narrower than the independent claims from which they depend, claims 1 and 15 necessarily encompass smoking articles in which the absorbent fibrous or wicking material is either in contact with the heater or is positioned in proximity to the heater. *Trustees of Columbia Univ. in City of New York v. Symantec Corp.*, 811 F.3d 1359,

RAI Exhibit 2009
Ecto World v. RAI Strategic
IPR2024-01280

1370 (Fed. Cir. 2016) ("[I]n a situation where dependent claims have no meaningful difference other than an additional limitation, the independent claim is not restricted by the added limitation in the dependent claim. In such situations, *construing the independent claim to exclude material covered by the dependent claim would be inconsistent*." (emphases added) (citations omitted)). Therefore, the phrase "wicked into contact with the resistance heater" must be construed broadly enough to encompass embodiments in which the wicking material "is in contact with" the heater *and* embodiments in which the wicking material is "positioned in proximity to" the heater.

Notably, the Specification does not provide any further detail as to how the liquid comes to contact the heater when the wicking material is in proximity to, instead of in contact with, the heater. Patent Owner argues that "[a] POSA would understand that a liquid can be wicked into contact with the heater even when the wicking material is not touching the heater" because "cohesive forces between molecules of a liquid can give rise to strong surface tension of the liquid and liquids can 'bridge' small gaps between surfaces." PO Resp. 31 (citing Ex. 2010 ¶¶ 75–79). In that regard, Mr. Clemens testifies:

> When the wicking material and the heater are in proximity to one another as described in the '123 patent, a POSA would understand that cohesive forces and surface tension allow the liquid (on the wicking material) to be wicked into contact with the heater even if the heater and wicking material are separated by a small distance. The liquid mixture that is present in the wicking material will extend a small distance from the wicking material to the heater, bridging the gap from the wicking material and into contact with the heater. As the liquid is vaporized and drawn away from the heater during draw by the user, the absence of liquid in the wicking material will cause

RAI Exhibit 2009
Ecto World v. RAI Strategic
IPR2024-01280

> more wicking action within the wicking material, thus wicking more liquid into its place and into contact with the heater.

Ex. 2010 ¶ 79.

The smoking article described in claims 1 and 15, however, includes elements in addition to the heater and the wicking material, and the Specification describes the arrangement of those elements and the use of the smoking article. Ex. 1001, 5:56–8:10, 19:37–30:36, Figs. 1–3. The Specification also describes the role the airflow generated by the user's draw plays in facilitating the volatilization of the liquid mixture. *Id.* at 21:15–62, 24:19–43, 27:16–33, 29:1–26. In light of these disclosures in the Specification, neither Patent Owner nor Mr. Clemens adequately addresses how a POSA would understand the arrangement of the other elements in the smoking article, and their function during use, to affect the cohesive forces and surface tension between the wicking material and the heater, and/or provide other mechanisms to transport the liquid from the wicking material to the heater. Moreover, as Petitioner points out, "'surface tension' and 'cohesive forces' are *additional* methods of liquid transport, beyond wicking." Pet. Reply 4.

Accordingly, we are not persuaded the term "wicked into contact" requires that the liquid mixture must be brought into contact with the electrical resistance heater solely by wicking, as Patent Owner contends. Nothing in the language of claims 1 and 15 would indicate to a POSA that "wicked into contact with the electrical resistance heater" cannot include forces other than wicking, particularly when the absorbent fibrous or wicking material is located in proximity to the heater. This is consistent with the Specification, which, as described above, teaches that the liquid is either wicked into contact with the heater or wicked into contact with an area

RAI Exhibit 2009
Ecto World v. RAI Strategic
IPR2024-01280

in close proximity to, and exposed to the heat produced by, the heater, for volatilization, depending on the location of the absorbent fibrous or wicking material in relation to the heater.

In view of the foregoing, we construe the phrase "wicked into contact with the electrical resistance heater" to mean "wicked into contact (1) with the heater, or (2) with an area in close proximity to, and exposed to the heat produced by, the heater."

C. Obviousness over Hon, Brooks, and Whittemore

Petitioner contends that the subject matter of claims 1, 2, 5, 7, 9, 11, 12, 14, 15, 18, 21, and 23–26 of the '123 patent would have been obvious over Hon alone, or over the combined teachings of Hon, Brooks, and Whittemore. Pet. 10–62. Petitioner relies on the Fox Declaration in support of its contentions. *Id*.

1. Overview of Hon

Hon is directed to an electronic atomization cigarette. Ex. 1005, 4. Figure 1 of Hon is reproduced below:

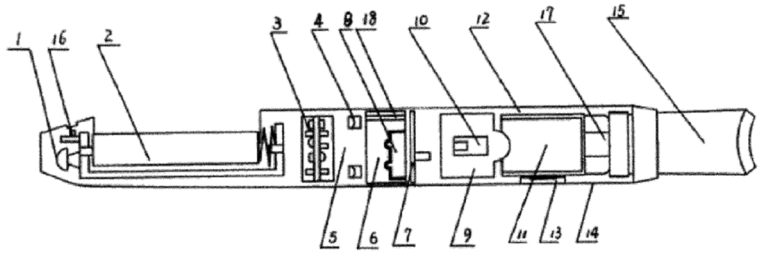

FIG. 1

Figure 1 is a schematic diagram of the structure of an electronic cigarette. *Id*. at 5. Hon teaches "a mouthpiece-shaped, cigar-shaped, or a pipe-shaped body" that includes battery 2, air inlet 4, normal pressure cavity 5, sensor 6, vapor-liquid separator 7, atomizer 9, liquid-supplying bottle 11, and mouthpiece 15 "set successively in the enclosure 14." *Id*. at 6.

RAI Exhibit 2009
Ecto World v. RAI Strategic
IPR2024-01280

Hon's Figure 6 is reproduced below.

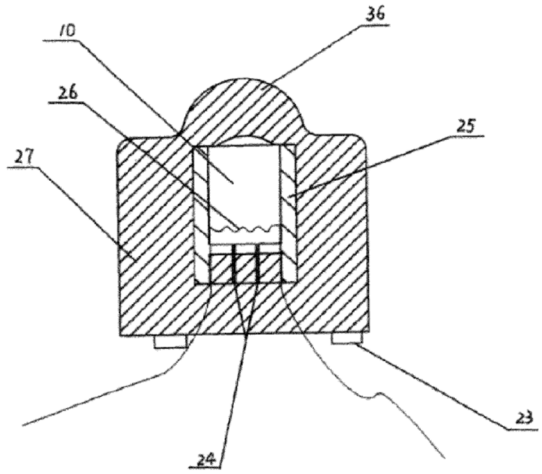

FIG. 6

Figure 6 is a structural diagram of an atomizer that includes atomization cavity 10, long stream ejection hole 24, atomization cavity wall 25, heating element 26, porous body 27, and bulge 36. Ex. 1005, 5–6. Hon teaches that "porous body 27 is wrapped around the atomization cavity wall 25" and "may be made of nickel foam, stainless steel fiber felt, high molecular polymeric foam, and ceramic foam." *Id*. "[A]tomization cavity wall 25 may be made of alumina or ceramic." *Id*.

Hon teaches that "[w]hen a smoker smokes, the mouthpiece 15 is under negative pressure[,] the air pressure difference or high-speed stream between the normal pressure cavity 5 and the negative pressure cavity 8 will cause the sensor 6 to output an actuating signal," which causes the cigarette to begin operating. Ex. 1005, 6. Air enters normal pressure cavity 5 through air inlet 4, proceeds through the through hole in vapor-liquid separator 7, and flows into atomization cavity 10 in atomizer 9. *Id*. at 7. The solution in porous body 27 is driven by a high speed airflow passing through ejection hole 24 and ejected in the form of droplets into atomization cavity 10. The

RAI Exhibit 2009
Ecto World v. RAI Strategic
IPR2024-01280

solution "is atomized ultrasonically by the first piezoelectric element 23 and is further atomized under the effect of heating element 26." *Id*. After atomization, large-diameter droplets are attached to the wall and reabsorbed by porous body 27 via overflow hole 29, and small-diameter droplets form an aerosol that is sucked out via aerosol passage 12, gas vent 17, and mouthpiece 15. *Id*. at 7. According to Hon, liquid storing porous body 28 in liquid-supplying bottle 11 is in contact with bulge 36 on atomizer 9 "to realize the solution supply via capillary infiltration." *Id.*; *see also id.* at 6, Fig. 11 (showing and describing porous body 28 in liquid-supplying bottle 11).

2. Overview of Brooks

Brooks relates to cigarettes and other smoking articles that "employ an electrical resistance heating element and an electrical power source to produce a tobacco-flavored smoke or aerosol." Ex. 1006, 1:6–10. Brooks teaches that the smoking articles "are capable of providing the user with the sensations of smoking (e.g., smoking taste, feel, satisfaction, pleasure, and the like), by heating but not burning tobacco, without producing sidestream smoke or odor, and without producing carbon monoxide." *Id*. at 1:11–16. Brooks also describes "a reusable controller which can be used with the cigarettes or disposable portions of the invention, as well as with other resistance heating aerosol producing articles." *Id*. at 4:35–38. This reusable controller includes "a current actuation means, a separate current regulating means to control the temperature of the heating element, and a battery power supply." *Id*. at 4:38–42.

Brooks states that "[p]referably, the current actuation means is puff actuated, so that current flows through the resistance heating element to produce aerosol only during draw by the user." Ex. 1006, 4:58–61. Brooks

RAI Exhibit 2009
Ecto World v. RAI Strategic
IPR2024-01280

also states that "the current regulating means preferably is based on controlling the time period during which current passes through the resistance element during draw," which, "in turn, controls the temperature experienced by the resistance element and by the aerosol forming substances." *Id*. at 4:64–5:1. Included in the current regulating means is an electrical control circuit that "maximizes initial heating of the heating element, until a desired temperature range for volatilization of the aerosol former and the tobacco flavor substances is reached, usually between about 150º C. and about 350º C." *Id*. at 5:1–6. Brooks teaches that the control circuit "normally maintains the heating element within the desired temperature range during the balance of the puff and/or ensures that the heating element does not overheat during puffing." *Id*. at 5:7–12.

3. Overview of Whittemore

Whittemore is directed to vaporizing units for a therapeutic apparatus. Ex. 1007, 1:1–2. Figure 2 is reproduced below:

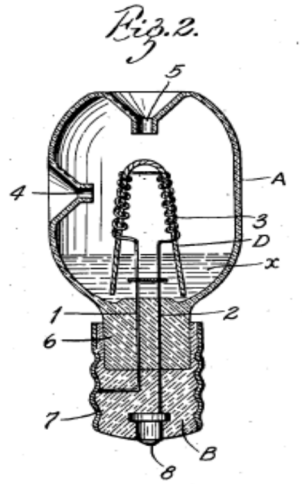

Figure 2 is an enlarged vertical sectional view of a therapeutic apparatus with a vaporizing unit. *Id*. at 1:15–16. Vaporizing vessel A is a hollow glass container that holds liquid medicament x. *Id*. at 1:19–23. Conductors 1 and 2 are combined with heating element 3 such that, when conductors 1

RAI Exhibit 2009
Ecto World v. RAI Strategic
IPR2024-01280

and 2 are energized, heating element 3 is heated. *Id*. at 1:24–27. Wick D is combined with heating element 3 so that a portion of wick D is always in contact, or in approximate contact, with heating element 3, and a portion of wick D is also in contact with liquid medicament x. *Id*. at 1:53–2:5.

According to Whittemore, medicament x is carried on wick D by capillary action to a point where it will be vaporized by the heat from heating element 3. Ex. 1007, 2:5–8. Whittemore states that "wick D consists of a thread, string or strand of some suitable wick material doubled intermediate its ends so as to form a substantially inverted V-shaped device whose side portions are encased in and surrounded by coiled or looped portions" of heating element 3, and "the lower ends or free ends of the side pieces of the wick projecting downwardly into the medicament and terminating at or in close proximity to the closed bottom 6 of the vessel." *Id*. at 2:9–18.

4. Claims 1 and 15

Petitioner contends that Hon, Brooks, and Whittemore disclose all of the elements of claims 1 and 15 as follows:

Preamble: "An electrically-powered, aerosol generating smoking article, comprising:" (Pet. 17–18 (relying on Ex. 1005, code (57), 7–8, Fig. 1; Ex. 1003 ¶¶ 88–89));

Element 1/15[a]: "an electrical power source [in the form of a battery] within a tubular outer housing having a mouth-end and an end distal to the mouth-end;" (Pet. 18–20 (relying on Ex. 1005, 6, Fig. 1; Ex. 1003 ¶¶ 90–95)).

Element 1/15[b]: "at least one electrical resistance heater powered by said electrical power source;" (Pet. 20–22 (relying on Ex. 1005, 5–7, Fig. 6, Fig. 12; Ex. 1007, 1:24–28; Ex. 1003 ¶¶ 96–99));

RAI Exhibit 2009
Ecto World v. RAI Strategic
IPR2024-01280

Element 1/15[c]: "a puff-actuated controller within the tubular outer housing and adapted for regulating current flow through the electrical resistance heater during draw, the controller comprising a sensor adapted for sensing draw on the smoking article by a user; and" (Pet. 22–29 (relying on Ex. 1005, 6–7, Fig. 1, Fig. 12; Ex. 1006, code (57), 1:6–10, 3:63–67, 4:50–5:26, 7:5–7, 7:25–8:23, 9:51–65, 10:42–47, 12:39–16:31, 20:53–21:27; Ex. 1003 ¶¶ 76–80 100–107, 114–117));

Element 1/15[d]: "a rod-shaped carrier device [removably] engaged with the mouth-end of the tubular outer housing comprising a cartridge providing a liquid storage compartment containing a mixture comprising a tobacco extract [comprising nicotine] and an aerosol-forming material [selected from glycerin, propylene glycol, or a mixture thereof, the mixture] absorbed within an absorbent [fibrous material/absorbent wicking material], the cartridge having a generally tubular shape and adapted for airflow therethrough;" (Pet. 29–45 (relying on Ex. 1005, 1, 3, 5–8, Fig. 1, Fig. 11; Ex. 1007, 2:7–25; Ex. 1003 ¶¶ 74, 75, 120–145, 151–153)); and

Element 1/15[e]: "wherein the rod-shaped carrier device is operatively positioned such that, during draw, the mixture comprising the tobacco extract and the aerosol-forming material can be wicked into contact with the electrical resistance heater and volatilized to produce a visible mainstream aerosol incorporating tobacco components or tobacco-derived components that can be drawn into the mouth of the user of the smoking article." (Pet. 45–53 (relying on Ex. 1005, 1, 6–7, Fig. 1, Fig. 6; Ex. 1007, 2:21–25; Ex. 1003 ¶¶ 146–168)).

Patent Owner argues in response that Petitioner does not establish that the asserted prior art discloses wicking the tobacco extract and aerosol-forming material mixture into contact with the electrical resistance heater

RAI Exhibit 2009
Ecto World v. RAI Strategic
IPR2024-01280

(element 1/15[e]) or a puff-actuated controller (element 1/15[c]) as independent claims 1 and 15 require. PO Resp. 20–55. We focus our analysis on element 1/15[e], which is dispositive of the controversy between the parties.

a) Element 1/15[e]: "the mixture comprising the tobacco extract and the aerosol-forming material can be wicked into contact with the electrical resistance heater and volatilized"

Petitioner contends that Hon alone, or the combined teachings of Hon and Whittemore, teaches claim element 1/15[e]. Pet. 45–53. We first address Petitioner's contentions as to Hon alone, and then turn to Petitioner's contentions as to Hon and Whittemore.

(1) Whether Hon teaches element 1/15[e]

Petitioner contends that Hon teaches "wicking material that is 'positioned in proximity to' the heater and wicks the liquid into contact with the heater." Pet. 47. Petitioner provides an annotated version of Hon's Figure 6, reproduced below, to illustrate its contentions:

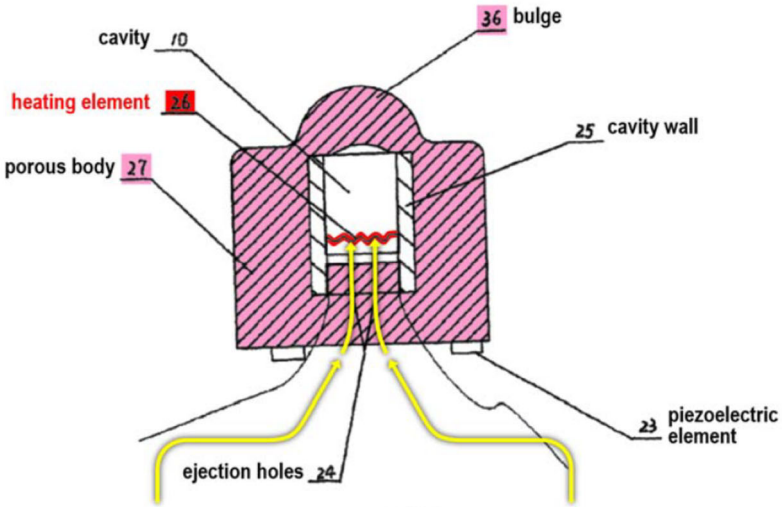

FIG. 6

Id. at 48. Annotated Figure 6 is a structural diagram of an atomizer described in Hon, wherein Petitioner labels each element, highlights heating

RAI Exhibit 2009
Ecto World v. RAI Strategic
IPR2024-01280

element 26 in red and porous body 27 in pink, and adds yellow arrows leading from outside the atomizer and through ejection holes 24. *Id*. With reference to annotated Figure 6, Petitioner contends that Hon's atomizer wicks the liquid mixture from the liquid-supplying bottle (not shown) to bulge 36 in porous body 27, after which the liquid mixture "is then further wicked around and through the porous body 27 'wrapped around the atomization cavity wall 25' to ejection holes 24." *Id*. at 47–48 (citing Ex. 1005, 6, Fig. 6; Ex. 1003 ¶ 152). Petitioner further contends that, "[d]uring the user's draw, the wicked liquid mixture contacts the heating element" when the solution in porous body 27 is driven by high speed airflow and ejected in the form of droplets into atomization cavity 10, "where it contacts 'heating element 26' and is volatilized." *Id*. at 48 (citing Ex. 1005, 7; Ex. 1003 ¶ 153).

Patent Owner responds that Hon's liquid mixture is not wicked into contact with Hon's heater. PO Resp. 27–33. Instead, Patent Owner argues, Hon's liquid mixture "is wicked out of bottle 11 and into the atomizer's porous body 27," and "[f]rom there the liquid is only transported by '*high-speed airflow of the ejection hole*,' not wicking." *Id*. at 27–28 (citing Ex. 1005, 7 (emphasis added); Ex. 2010 ¶ 71). Referring to Petitioner's annotated version of Hon's Figure 6, Patent Owner argues that "heating element 26 is located within cavity 10 and is separated from porous body 27 by cavity wall 25." *Id*. at 28 (citing Ex. 1003 ¶¶ 152–153; Ex. 2010 ¶ 73). Patent Owner further argues that "high speed airflow through ejection holes 24 is necessary to transport liquid into the atomization cavity 10," and this "reliance on the 'user's draw to carry droplets . . . from the ejection hole' is not wicking." *Id*. at 29 (citing Ex. 2010 ¶¶ 73–74; Ex. 1003 ¶¶ 152, 153, 160) (alteration in original). According to Patent Owner,

RAI Exhibit 2009
Ecto World v. RAI Strategic
IPR2024-01280

> Hon's use of the atomization cavity wall 25 to separate the heating element 26 from porous body 27, and "high-speed airflow through the ejection hole" 24 to move the liquid into the atomization cavity once it has separated from the wicking material, provides a fundamentally different transport phenomena from the claimed wicking into contact with the heater.

Id. at 33 (citing Ex. 2010 ¶ 80).

Having considered the complete trial record, we determine that Petitioner fails to establish by a preponderance of the evidence that Hon teaches that "the mixture comprising the tobacco extract and the aerosol-forming material can be wicked into contact with the electrical resistance heater" as claims 1 and 15 require. As set forth above, we determine that "wicked into contact" means that that the liquid mixture can be wicked into contact with the heater, or wicked into contact with an area in close proximity to, and exposed to the heat generated by, the heater. *See* Section II.B.1, *supra*. Hon teaches that contact between liquid storing porous body 28 in liquid-supplying bottle 11 and bulge 36 on atomizer 9 causes the liquid mixture to wick into porous body 27, which is wrapped around atomization cavity wall 25 of atomization cavity 10. Ex. 1005, 6–7. Hon also teaches that heating element 26 is set in atomization cavity 10. *Id*. at 6. Hon further teaches that the liquid mixture is "atomized under the effect of the heating element 26" after it is driven by the high-speed airflow of ejection holes 24 in cavity wall 25 and ejected as droplets into atomization cavity 10. *Id*. at 7.

Hon, therefore, discloses wicking the liquid mixture in porous body 27 to an area that is separated from Hon's heating element 26 by atomization cavity wall 25, and that the liquid mixture is exposed to heat produced by heating element 26 only after it is driven through ejection

RAI Exhibit 2009
Ecto World v. RAI Strategic
IPR2024-01280

hole 24 by the airflow generated by the user's draw. In light of these express disclosures in Hon, Petitioner does not establish that Hon's liquid mixture is wicked to an area in "close proximity" to Hon's heater, as the second part of our claim construction requires.

In particular, Petitioner does not show that the liquid in Hon's porous body 27 is wicked to an area in close proximity to the heater where it is exposed to heat generated by heating element 26. In Hon, atomization cavity wall 25 separates porous body 27 from heating element 26 and prevents liquid entrained in the porous body from being exposed to heat from the heating element. In that regard, Mr. Clemens testifies that "Hon's atomizer is structured with a very small, super-heated atomization cavity inside cavity wall 25, which may be made of a ceramic (an insulator to help concentrate heat)." Ex. 2010 ¶ 107; *see also id*. ¶ 89 ("Hon instead chose to separate the porous body and the heater with the walls of the atomization cavity (cavity wall 25)."). Hon teaches that the liquid mixture is wicked by porous body 27 to an area that contacts the outside of atomization cavity wall 25, which, as Mr. Clemens points out, insulates the porous body from heat generated by heating element 26 inside of atomization cavity 10. Neither Petitioner nor Mr. Fox show that this area is in close proximity to, and exposed to the heat produced by, the heater as claims 1 and 15 require.

Moreover, we are not directed to, nor do we discern, any evidence in the record that indicates that ejection hole 24 in atomization cavity wall 25 allows the liquid mixture in porous body 27 to be wicked to an area in close proximity to heating element 26. On the contrary, the evidence shows that high speed airflow created by the user's draw is necessary to propel the liquid mixture through Hon's ejection hole 24 and that atomization cavity wall 25 creates a physical separation between the liquid mixture in porous

RAI Exhibit 2009
Ecto World v. RAI Strategic
IPR2024-01280

body 27 and heating element 26 that precludes the liquid mixture from being wicked into contact with an area in close proximity to, and exposed to the heat produced by, heating element 26.

Accordingly, we determine that Petitioner does not establish, by a preponderance of the evidence, that Hon discloses that the liquid mixture is wicked into contact with an area in close proximity to, and exposed to the heat produced by, the heater as required by claims 1 and 15.

(2) Whether a POSA would have combined Hon and Whittemore to arrive at claim element 1/15[e]

Petitioner also contends that the combination of Hon and Whittemore teaches "the wicking material itself 'is in contact with' the heater." Pet. 47. In particular, Petitioner contends that "it would have been obvious to replace Hon's complicated atomizer with a simple heater/wick design as taught by Whittemore (Ex. 1007), thus wicking the liquid directly to the heater to volatilize Hon's mixture and generate the aerosol." *Id*. at 50. Petitioner contends Whittemore teaches that a liquid mixture is carried on a wick by capillary action to a point where it will be vaporized by the heat from the heating element that is wrapped around the wick. *Id*. Petitioner contends that a POSA would have been motivated to replace Hon's atomizer with Whittemore's heater/wick design "to reduce design costs and effort, reduce manufacturing costs including parts and assembly, [and] increase reliability." *Id*. at 53. According to Petitioner, "doing so would have been a simple substitution, and a POSA would have had a reasonable expectation of success in implementing such a device." *Id*. (citing Ex. 1003 ¶¶ 158–168).

Patent Owner responds that Petitioner and Mr. Fox do not provide "evidence to support that replacing Hon's dual stage atomizer design with Whittemore's wick/heater design" would simplify Hon's device, "or that a

RAI Exhibit 2009
Ecto World v. RAI Strategic
IPR2024-01280

POSA would have been motivated to modify Hon to incorporate Whittemore's ancient wick/heater design from the 1930s." PO Resp. 35 (citing Ex. 2010 ¶¶ 83–85). Patent Owner also argues that "Hon itself already describes an alternative embodiment that eliminates the first piezoelectric element '[t]o simplify the design.'" *Id*. at 36 (citing Ex. 1005, 7; Ex. 2010 ¶¶ 87–88) (alteration in original). According to Patent Owner, "even if a POSA had been motivated to simplify Hon's device, a POSA would not have had to look beyond Hon itself to understand that she could have removed the piezoelectric element 23 and continued to use a very similar atomizer." *Id*. (citing Ex. 2010 ¶ 87). Patent Owner further argues that "Hon's heater is more efficient, and thus works better and with less power consumption, than the heater in Whittemore's wick/heater design." *Id*. (citing Ex. 2010 ¶ 89).

The Supreme Court requires an expansive and flexible approach in determining whether a patented invention would have been obvious at the time it was made. *See KSR*, 550 U.S. at 415. The existence of a reason for a person having ordinary skill in the art to modify a prior art reference is a question of fact. *See In re Constr. Equip. Co.*, 665 F.3d 1254, 1255 (Fed. Cir. 2011). In an obviousness analysis, some kind of reason must be shown as to why a person having ordinary skill in the art would have thought of combining or modifying the prior art to achieve the patented invention. *See Innogenetics, N.V. v. Abbott Labs.*, 512 F.3d 1363, 1374 (Fed. Cir. 2008). A reason to combine or modify the prior art may be found explicitly or implicitly in market forces, design incentives, the "'interrelated teachings of multiple patents'; 'any need or problem known in the field of endeavor at the time of invention and addressed by the patent'; and the background knowledge, creativity, and common sense of the person of ordinary skill."

RAI Exhibit 2009
Ecto World v. RAI Strategic
IPR2024-01280

Perfect Web Techs., Inc. v. InfoUSA, Inc., 587 F.3d 1324, 1329 (Fed. Cir. 2009) (quoting *KSR*, 550 U.S. at 418–21).

Based on our review of the complete trial record, we determine that Petitioner fails to establish by a preponderance of the evidence that a POSA would have been motivated to replace Hon's atomizer with Whittemore's heater and wick.

As an initial matter, Hon itself describes ways to simplify its design. Ex. 1005, 7. In particular, Hon teaches that (1) first piezoelectric element 23 on atomizer 9 can be removed such that atomization only relies on heating element 26, which results in a smaller atomizer; or (2) first piezoelectric heating element 23 and the heating element can be removed, and "single or multi-layer, flat second piezo electric element 35 is added in the atomization cavity" that is vibrated by the airflow through the ejection holes "to realize atomization, and the strong ultrasonic atomization effect is achieved." *Id*. Petitioner concedes that removing Hon's piezoelectric element would also eliminate its associated circuitry, thereby "reducing cost and complexity," but argues that "the atomizer will no longer have the benefit of the piezoelectric device's vibrations to help form an aerosol" because "the heater is now the primary source of energy for forming the aerosol." Pet. 52 (citing Ex. 1005, 7). Petitioner goes on to argue that, as a result, a POSA would have "further simplified" Hon's design by replacing Hon's atomizer with Whittemore's wick and heater. *Id*. (citing Ex. 1003 ¶¶ 159–168).

We are not persuaded by Petitioner's argument. Petitioner does not show persuasively that replacing Hon's atomizer with Whittemore's wick and heater would have simplified the device as compared with the modifications Hon expressly teaches. In this regard, we credit Mr. Clemens's well-reasoned testimony that that Hon's heater produces

RAI Exhibit 2009
Ecto World v. RAI Strategic
IPR2024-01280

more aerosol at a higher efficiency while using less power than the heater in Whittemore's wick/heater design. Ex. 2010 ¶ 89 (explaining that "Hon's device and heater are volatilizing copious tiny aerosol droplets at high speed under conditions of negative pressure and high temperature, while Whittemore's design uses a continuous large volume of room-temperature liquid with a large (relative to Hon) heated and low surface area of cotton string").

Petitioner attempts to support its simplification argument with Mr. Fox's testimony, and also relies on what Petitioner refers to as "the Ruyan device." *See* Pet. 5. Petitioner contends that the Ruyan device (which Hon invented) is applicant-admitted prior art because "the '123 patent admits that '[r]epresentative smoking articles . . . can be provided' using the 'exemplary components' of the prior art Ruyan device." *Id*. (citing Ex. 1001, 19:25–36). Mr. Fox admits that the '123 patent does not describe the Ruyan device, and instead asserts that "the Tobacco Legacy Database (https://www.industrydocuments.ucsf.edu/tobacco/) has contemporary teardown reports generated by" R. J. Reynolds Tobacco Co. ("RJR") and Philip Morris U.S.A. ("PMUSA"), "showing the internals of the Ruyan devices." Ex. 1003 ¶¶ 24, 25; Ex. 1019; Ex. 1020; Ex. 1023. Petitioner points out that two inventors listed on the '123 patent (John Robinson and David Griffith) are also identified as authors of the RJR teardown report, which documents disassembling a Ruyan device. Pet. 6 (citing Ex. 1023; Ex. 1024); *see* Ex. 1001, code (72). Petitioner argues that "the commercially available Ruyan device—as documented by Patent Owner at the relevant time—illustrates a POSA's background knowledge of commercial practices in the art." Pet. 9 (citing *Yeda Research & Dev. Co. v. Mylan Pharms., Inc.*, 906 F.3d 1031, 1041–42 (Fed. Cir. 2018)). Patent Owner responds that

RAI Exhibit 2009
Ecto World v. RAI Strategic
IPR2024-01280

Petitioner and Mr. Fox improperly rely on the Ruyan device, as described in the RJR teardown report, as substantive support for Mr. Fox's opinions, and not solely as background information. PO Resp. 37–41.

We agree with Petitioner that evidence of a POSA's background knowledge is not limited to prior art references. *See, e.g.*, *Qualcomm Inc. v. Apple Inc.*, 24 F.4th 1367, 1376 (Fed. Cir. 2022) ("[E]ven though evidence such as expert testimony and party admissions are not themselves prior art references, they are permissible evidence in an *inter partes* review for establishing the background knowledge possessed by a person of ordinary skill in the art."); *Yeda*, 906 F.3d at 1041–42 (holding that a petition may rely on non-statutory prior art as evidence of the motivation of a POSA to combine or modify the prior art). We need not decide if Petitioner's reliance on the Ruyan device, as described in the RJR teardown report, is proper here, however, because we are not persuaded that the RJR teardown report supports Mr. Fox's opinions.

Mr. Fox relies on the RJR teardown report as evidence of what a POSA would have known about the Ruyan device, which, according to Mr. Fox, is "an actual implementation of Hon's design." Ex. 1003 ¶ 159. Mr. Fox then relies on that knowledge of the Ruyan device to support the contention that a POSA would have been motivated to replace Hon's atomizer with Whittemore's wick and heater. Pet. 51–53; Ex. 1003 ¶¶ 158–168. In particular, Mr. Fox testifies that the RJR teardown report explains that the Ruyan device "requires a long and slow draw to produce a satisfactory amount of aerosol," and, as a result, "a POSA would have wanted to ensure that sufficient liquid is delivered to the heater for volatilization." Ex. 1003 ¶ 159 (citing Ex. 1023, 11, 15–16). Mr. Fox further testifies that "[a] POSA would have realized that a separate problem

RAI Exhibit 2009
Ecto World v. RAI Strategic
IPR2024-01280

with the Ruyan device's performance may have been with the design of the atomizer itself," because "[i]f the user draws on the device with too much or too little force (or for an insufficient amount of time)," the heater would receive an unsatisfactory quantity or quality of the liquid mixture, which "may have contributed at least in part to the observed need for long and slow draws when using the Ruyan device." *Id*. ¶ 160. Mr. Fox also opines that the RJR teardown report demonstrates "that a POSA would have known that Ruyan's actual devices lacked the piezoelectric element and circuitry, or if it were included, it did not function in at least some of the commercially available devices," which "indicates that Ruyan eliminated them in practice or they were unreliable." *Id*. ¶¶ 163, 165 (citing Ex. 1023, 7–8).

The RJR teardown report, however, does not say that the Ruyan device failed to produce sufficient aerosol. Instead, the RJR teardown report states that, when using an "intense" puffing regimen that "consists of 22 puffs, 60ml volume, with each puff lasting two seconds" with "[o]ne puff taken every thirty seconds until the final puff is taken" (also called "60/30/2"), aerosol yields were "relatively low." Ex. 1023, 3. It goes on to state that when the duration of the individual puff was lengthened from two seconds to three seconds ("60/30/3"), "aerosol yields from the electronic cigar *increased significantly*," likely "due to an increase in temperature of the heating elements, *resulting in more efficient aerosol generation*." *Id*. at 11–12 (emphases added). Notably, Mr. Fox does not contend that a three second puff was unacceptable to users.

The RJR teardown report also states that "for first reaction (again anecdotal responses) of those who have tried it is that they are surprised at how much aerosol is generated during a puff." *Id*. at 15. It further notes that one "Medium" extract cartridge that came with the Ruyan device "yielded

RAI Exhibit 2009
Ecto World v. RAI Strategic
IPR2024-01280

significant amounts of aerosol for more than 600 puffs," which, "[w]ith 22 puffs defining one 'smoking' of an Eclipse cigarette, this cartridge . . . yielded aerosol equivalent to 25 to 30 Eclipse cigarettes." *Id*. at 13. Thus, the RJR teardown report appears to contradict Mr. Fox's opinion that a POSA would have been motivated to replace Hon's atomizer because the Ruyan device did not produce sufficient aerosol.

We also credit Mr. Clemens's testimony, which is consistent with the RJR teardown report, that:

> The RJR engineers actually found that "the Ruyan electronic cigar seems to have addressed several shortcomings of some of the earlier attempts at producing a cigarette-like aerosol without combustion." Ex. 1023 at 14–15. In doing so, the RJR engineers specifically stated that the Ruyan device provided an advancement over previous aerosol generating technology, including Whittemore itself. Ex. 1023 at 14 ("While the idea of generating a cigarette-like aerosol without burning tobacco is not new (see: Whittenmore [sic], Jr. US 2,057,353; McComick, US 2,104,266; Brooks et al., US 4,947,874; Counts, et al. US 5,060,671; Counts et al., US 5,144,962)) the Ruyan electronic cigar seems to have addressed several shortcomings of some of the earlier attempts at producing a cigarette-like aerosol without combustion.") Therefore, a POSA would not have been motivated to incorporate the heater/wick design of Whittemore in the Hon device, where the authors of the teardown report on the Ruyan device expressly found the Ruyan device to be an improvement over Whittemore.

Ex. 2010 ¶ 93.

The RJR teardown report, therefore, does not demonstrate that the Ruyan device failed to produce sufficient aerosol or otherwise displayed poor performance in need of improvement, and neither Petitioner nor Mr. Fox provide any other evidence that establishes that a POSA would have understood otherwise. Accordingly, we are not persuaded that Mr. Fox's

RAI Exhibit 2009
Ecto World v. RAI Strategic
IPR2024-01280

testimony establishes, on this record, that a POSA would have understood the Ruyan device to be deficient such that a POSA would have been motivated to replace Hon's atomizer with Whittemore's wick and heater as Mr. Fox proposes. Additionally, neither Petitioner nor Mr. Fox provide objective evidence to support the assertion that Whittemore's wick and heater is "simpler and cheaper" than Hon's atomizer, or that using Whittemore's wick and heater in Hon would have reduced design and manufacturing costs, increased reliability, or increased the expectation of success. Petitioner's analysis, and the cited testimony of Mr. Fox, does not persuade us that a POSA would have combined the teachings of Hon and Whittemore as Petitioner proposes.

We are also not persuaded that Petitioner establishes that a POSA would have had a reasonable expectation of success in replacing Hon's atomizer with Whittemore's wick and heater. Mr. Fox testifies that choosing an appropriate wick, heater, and physical arrangement "would have been well within a POSA's skill" and "would also simplify the design (and thus implementation and manufacturing cost and complexity)" by eliminating the piezoelectric element and its associated circuitry. Ex. 1003 ¶¶ 161–162. Mr. Fox also testifies that, as a result, "a POSA would have had a reasonable expectation of success in achieving a suitable wick/heater combination to provide the desired amount of aerosol during the user's draw with much less effort than implementing Hon's complicated atomizer." *Id.* ¶ 161. Petitioner also states that "a POSA would have had a reasonable expectation of success using well known methods and components, such as those taught by Whittemore, to improve the device taught by Hon." Pet. Reply 19. Such conclusory assertions, lacking factual substantiation, are insufficient for evaluating reasonable expectation of success as part of an obviousness

RAI Exhibit 2009
Ecto World v. RAI Strategic
IPR2024-01280

determination. *Wasica Fin. GmbH v. Cont'l Auto. Sys., Inc.*, 853 F.3d 1272, 1286 (Fed. Cir. 2017).

Petitioner also points to the Board's decision in IPR2016-01268 ("the 1268 IPR") to support Petitioner's contention that replacing Hon's atomizer with Whittemore's wick and heater "would have been a simple substitution." Pet. 53 (citing *R.J. Reynolds Vapor Co. v. Fontem Holdings 1 B.V.*, IPR2016-01268, Paper 63 at 17–18 (PTAB Dec. 19, 2017) ("the 1268 Decision," Ex. 1022)).

In the 1268 Decision, the Board evaluated the combination of Hon and Whittemore with respect to different claims of a different, unrelated patent. The Board determined that the petitioner did not adequately explain why replacing the heater in Hon's atomizer with Whittemore's wire-wrapped wick, while also retaining Hon's porous body, was a simple substitution, relying on credible testimony from the patent owner's declarant that Whittemore's wick performs the same function as Hon's porous body. Ex. 1022, 18. In that regard, the Board credited the patent owner's contention, supported with the declarant's testimony, that removing Hon's entire atomizer and replacing it with Whittemore's wire-wrapped wick would have been a simple substitution, over the petitioner's insufficiently supported contentions. *Id*. at 17. At the same time, the Board credited the patent owner's declarant's testimony that "if the porous body 27 and the heating wire 26 of Hon '043 are removed in making the modification, then the atomizer of Hon '043 is entirely discarded and replaced *with something else having little relation to the atomizer disclosed in Hon '043*." *Id.* at 18 (emphasis added). The italicized testimony is applicable to Petitioner's contention here. We find that Whittemore's wire-wrapped wick has little relation to the atomizer disclosed in Hon and that Petitioner has not shown

RAI Exhibit 2009
Ecto World v. RAI Strategic
IPR2024-01280

persuasively how or why Petitioner's proposed substitution would have improved Hon's electronic atomization cigarette.

Patent Owner was the petitioner in the 1268 IPR, and Petitioner contends that Patent Owner's arguments here contradict those it made as the petitioner in the 1268 IPR and "[t]hat should be dispositive." Pet. Reply 12–13. Relying on *Ultratec, Inc. v. CaptionCall LLC*, Petitioner contends that "Patent Owner's and Mr. Clemens's arguments that (i) a POSA would *not* combine Hon with Whittemore or (ii) Hon's heater is more efficient than Whittemore's, are not credible in light of Patent Owner's previous representations to the Board." *Id*. at 13–14 (citing *Ultratec, Inc. v. CaptionCall LLC*, 872 F.3d 1267, 1272–73 (Fed. Cir. 2017)).

The facts here are distinguishable from those in *Ultratec*. There, the same expert offered allegedly conflicting testimony addressing the same patents, references, and limitations. *Ultratec*, 872 F.3d at 1269–1270. Our reviewing court stated that, under those circumstances, conflicting testimony on cross-examination "would be highly relevant to both the Board's analysis of the specific issues on which [the expert] gave inconsistent testimony and to the Board's overall view of his credibility" and "any such inconsistencies would likely bear on the overall credibility of the expert." *Id*. at 1274.

In contrast, Mr. Clemens did not testify in the 1268 IPR, which was directed to different limitations of a different patent. *See* Ex. 1022, 2–6. Nor does Petitioner allege that Mr. Clemens previously provided any testimony regarding the '123 patent, the challenged claims, Hon, or Whittemore that conflicts with his testimony in this proceeding. We are not persuaded that Mr. Clemens's credibility here is undermined by the testimony of a different witness in a different proceeding concerning a different patent and different challenged claims. *See also Intel Corp. v.*

RAI Exhibit 2009
Ecto World v. RAI Strategic
IPR2024-01280

Qualcomm, Inc., IPR2018-01261, Paper 30 at 25–26 (PTAB Jan. 9, 2020) (refusing to accord less weight to the petitioner's expert's testimony because it allegedly conflicted with testimony given on behalf of the petitioner by a different expert in a different proceeding concerning the same patent). Moreover, Petitioner does not direct us to any authority to support the proposition that Patent Owner is precluded from making arguments regarding Hon and Whittemore in this proceeding that arguably conflict with the arguments it made as petitioner in the 1268 IPR. Accordingly, we disagree with Petitioner that the 1268 Decision is dispositive of any of the issues now before us.

For these reasons, we determine that Petitioner does not establish, by a preponderance of the evidence, that a POSA would have been motivated to combine Hon and Whittemore to arrive at the claim limitation requiring that the liquid mixture is wicked into contact with the heater.

(3) Conclusion

It is Petitioner's burden to establish facts supporting its challenge that claims 1 and 15 would have been obvious over Hon alone or the combined teachings of Hon, Brooks, and Whittemore by a preponderance of the evidence. 35 U.S.C. § 316(e) (2018); *see also Harmonic Inc. v. Avid Tech., Inc.*, 815 F.3d 1356, 1363 (Fed. Cir. 2016) (citing 35 U.S.C. § 312(a)(3) (requiring *inter partes* review petitions to identify "with particularity . . . the evidence that supports the grounds for the challenge to each claim")). After considering Petitioner's and Patent Owner's positions, as well as their supporting evidence, we are not persuaded that Petitioner has demonstrated that Hon teaches or suggests that the liquid mixture can be "wicked into contact with the electrical resistance heater" under the proper claim construction. We are also not persuaded that Petitioner has demonstrated

RAI Exhibit 2009
Ecto World v. RAI Strategic
IPR2024-01280

that a POSA would have had a reason to modify Hon in view of Whittemore to reach this limitation. Petitioner does not rely on Brooks to remedy this deficiency in Hon and Whittemore. Accordingly, we conclude that Petitioner has not demonstrated, by a preponderance of the evidence, that claims 1 and 15 of the '123 patent would have been obvious over Hon alone, or over the combined teachings of Hon, Brooks, and Whittemore.

5. Dependent Claims

Petitioner contends that claims 2, 5, 7, 9, 11, 12, and 14, which depend from claim 1, and claims 18, 21, and 23–26, which depend from claim 15, would have been obvious "for the same reasons as their respective independent claim" and for additional reasons related to the added limitations in each dependent claim. Pet. 53–62. Petitioner's arguments regarding the additional limitations in the dependent claims do not remedy the deficiencies discussed above with respect to independent claims 1 and 15. Thus, for the same reasons given above with respect to Petitioner's challenge to claims 1 and 15, we also conclude that Petitioner has not demonstrated, by a preponderance of the evidence, that claims 2, 5, 7, 9, 11, 12, 14, 18, 21, and 23–26 of the '123 patent would have been obvious over Hon alone, or over the combined teachings of Hon, Brooks, and Whittemore.

D. Remaining Grounds

Petitioner contends that claims 3, 4, 13, 16, and 17 would have been obvious over the combined teachings of Hon, Whittemore, Brooks, and Susa, and that claims 6 and 19 would have been obvious over the combined teachings of Hon, Whittemore, Brooks, and Ray. Pet. 62–68. Each of claims 3, 4, 6, 13, 16, 17, and 19 directly depend from either claim 1 or claim 15, and, therefore, require that the liquid mixture be "wicked into contact with the electrical resistance heater." Ex. 1001, 33:12–15, 33:18–21,

RAI Exhibit 2009
Ecto World v. RAI Strategic
IPR2024-01280

33:36–37, 34:3–6, 34:9–12. Thus, for the same reasons given above with respect to Petitioner's challenge of claims 1 and 15, we also conclude that Petitioner has not demonstrated by a preponderance of the evidence that claims 3, 4, 6, 13, 16, 17, and 19 would have been obvious over the asserted prior art.

III. CONCLUSION

For the reasons given, we are not persuaded that Petitioner has shown by a preponderance of the evidence that claims 1–7, 9, 11–19, 21, and 23–26 of the '123 patent would have been unpatentable based on the challenges presented in the Petition.

In summary:

Claims	35 U.S.C. §	References/Basis	Claims Shown Unpatentable	Claims Not shown Unpatentable
1, 2, 5, 7, 9, 11, 12, 14, 15, 18, 21, 23–26	103	Hon		1, 2, 5, 7, 9, 11, 12, 14, 15, 18, 21, 23–26
1, 2, 5, 7, 9, 11, 12, 14, 15, 18, 21, 23–26	103	Hon, Brooks, Whittemore		1, 2, 5, 7, 9, 11, 12, 14, 15, 18, 21, 23–26
3, 4, 13, 16, 17	103	Hon, Whittemore, Brooks, Susa		3, 4, 13, 16, 17
6, 19	103	Hon, Whittemore, Brooks, Ray		6, 19
Overall Outcome				1–7, 9, 11–19, 21, 23–26

RAI Exhibit 2009
Ecto World v. RAI Strategic
IPR2024-01280

IV. ORDER

In consideration of the foregoing, it is hereby:

ORDERED that Petitioner has not shown by a preponderance of the evidence that claims 1–7, 9, 11–19, 21, and 23–26 of the ’123 patent are unpatentable; and

FURTHER ORDERED that, because this is a Final Written Decision, parties to the proceeding seeking judicial review of the Decision must comply with the notice and service requirements of 37 C.F.R. § 90.2.

RAI Exhibit 2009
Ecto World v. RAI Strategic
IPR2024-01280

FOR PETITIONER:

Jonathan M. Strang
Matthew J. Moore
Lawrence J. Gotts
Clement Naples
Gregory K. Sobolski
Dale Change
LATHAM & WATKINS LLP
jonathan.strang@lw.com
matthew.moore@lw.com
lawrence.gotts@lw.com
clement.naples@lw.com
greg.sobolski@lw.com
dale.chang@lw.com

FOR PATENT OWNER:

David M. Maiorana
Anthony M. Insogna
Geoffrey K. Gavin
Kenneth S. Luchesi
Joshua R. Nightingale
David B. Cochran
JONES DAY
dmaiorana@jonesday.com
aminsogna@jonesday.com
ggavin@jonesday.com
kluchesi@jonesday.com
jrnightingale@jonesday.com
dcochran@jonesday.com

RAI Exhibit 2009
Ecto World v. RAI Strategic
IPR2024-01280

Exhibit 2

US011925202B2

(12) **United States Patent**
Robinson et al.

(10) **Patent No.: US 11,925,202 B2**
(45) **Date of Patent: *Mar. 12, 2024**

(54) **TOBACCO-CONTAINING SMOKING ARTICLE**

(71) Applicant: **RAI Strategic Holdings, Inc.**, Winston-Salem, NC (US)

(72) Inventors: **John Howard Robinson**, Kernersville, NC (US); **David William Griffith, Jr.**, Winston-Salem, NC (US); **Billy Tyrone Conner**, Clemmons, NC (US); **Evon Llewellyn Crooks**, Mocksville, NC (US); **Dempsey Bailey Brewer, Jr.**, East Bend, NC (US)

(73) Assignee: **RAI Strategic Holdings, Inc.**, Winston-Salem, NC (US)

(*) Notice: Subject to any disclaimer, the term of this patent is extended or adjusted under 35 U.S.C. 154(b) by 0 days.

This patent is subject to a terminal disclaimer.

(21) Appl. No.: **18/129,643**

(22) Filed: **Mar. 31, 2023**

(65) **Prior Publication Data**

US 2023/0232886 A1 Jul. 27, 2023

Related U.S. Application Data

(63) Continuation of application No. 17/673,424, filed on Feb. 16, 2022, now Pat. No. 11,758,936, which is a

(Continued)

(51) **Int. Cl.**
A24B 3/14 (2006.01)
A24B 13/02 (2006.01)

(Continued)

(52) **U.S. Cl.**
CPC ***A24B 3/14*** (2013.01); ***A24B 13/02*** (2013.01); ***A24B 15/12*** (2013.01); ***A24B 15/167*** (2016.11);

(Continued)

(58) **Field of Classification Search**
None
See application file for complete search history.

(56) **References Cited**

U.S. PATENT DOCUMENTS

438,310 A 10/1890 Edison
705,919 A 7/1902 Gill

(Continued)

FOREIGN PATENT DOCUMENTS

AU 276250 7/1965
CA 2562581 10/2005

(Continued)

OTHER PUBLICATIONS

"(±)-1,2-propanediol," ChemSpider, [online], 2019, retrieved from the Internet, [retrieved Jan. 16, 2019], <URL: http://www.chemspider.com/Chemical-Structure.13835224.html?rid=ae1c106a-376d-4104-9a7c-f0910a5b5b20&page_num=0>. (Year: 2019).

(Continued)

Primary Examiner — Phu H Nguyen
(74) *Attorney, Agent, or Firm* — Womble Bond Dickinson (US) LLP

(57) **ABSTRACT**

A smoking article may include a cigarette incorporated within an electrically powered aerosol generating device that acts as a holder for that cigarette. The smoking article possesses at least one form of tobacco. The smoking article also possesses a mouth-end piece that is used by the smoker to inhale components of tobacco that are generated by the action of heat upon components of the cigarette. A representative smoking article possesses an outer housing incorporating a source of electrical power (e.g., a battery), a sensing mechanism for powering the device at least during periods of draw, and a heating device (e.g., at least one electrical resistance heating element) for forming a thermally generated aerosol that incorporates components of tobacco. During use, the cigarette is positioned within the

(Continued)

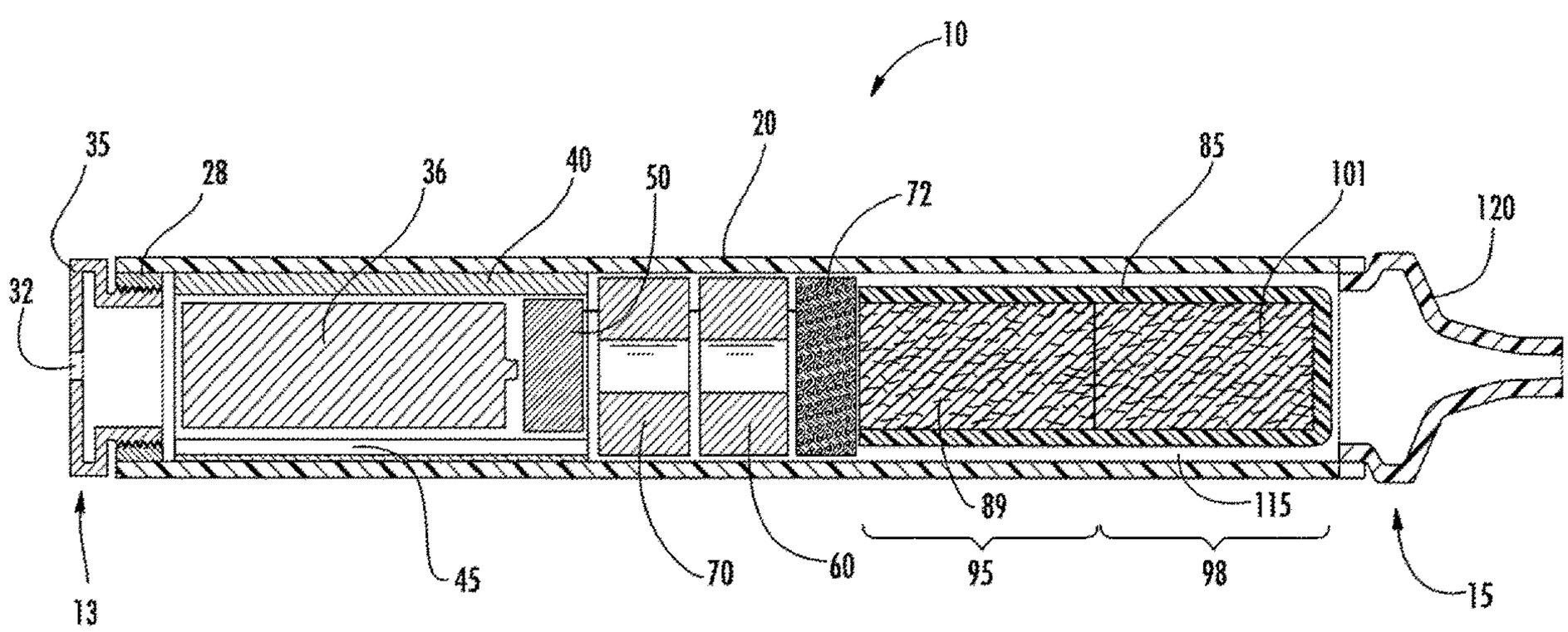

RAI Exhibit 2009
Ecto World v. RAI Strategic
IPR2024-01280

device, and after use, the used cigarette is removed from the device and replaced with another cigarette.

30 Claims, 5 Drawing Sheets

Related U.S. Application Data

continuation of application No. 16/271,443, filed on Feb. 8, 2019, now Pat. No. 11,785,978, which is a continuation of application No. 15/879,268, filed on Jan. 24, 2018, now Pat. No. 10,231,488, which is a continuation of application No. 15/286,087, filed on Oct. 5, 2016, now Pat. No. 9,901,123, which is a continuation of application No. 14/527,287, filed on Oct. 29, 2014, now Pat. No. 9,801,416, which is a continuation of application No. 13/297,983, filed on Nov. 16, 2011, now Pat. No. 8,899,238, which is a continuation of application No. 12/763,890, filed on Apr. 20, 2010, now Pat. No. 8,079,371, which is a continuation of application No. 11/550,634, filed on Oct. 18, 2006, now Pat. No. 7,726,320.

(51) **Int. Cl.**

A24B 15/12	(2006.01)
A24B 15/167	(2020.01)
A24D 1/00	(2020.01)
A24D 1/20	(2020.01)
A24F 40/10	(2020.01)
A24F 40/20	(2020.01)
A24F 40/40	(2020.01)
A24F 40/42	(2020.01)
H05B 3/42	(2006.01)

(52) **U.S. Cl.**

CPC ***A24D 1/002*** (2013.01); ***A24D 1/20*** (2020.01); ***A24F 40/40*** (2020.01); ***A24F 40/42*** (2020.01); ***H05B 3/42*** (2013.01); *A24F 40/10* (2020.01); *A24F 40/20* (2020.01); *H05B 2203/021* (2013.01)

(56) **References Cited**

U.S. PATENT DOCUMENTS

780,087 A 1/1905 Burt
1,016,844 A 2/1912 Moonelis
1,084,304 A 1/1914 Vaughn
1,147,416 A 7/1915 MacDonald
1,304,075 A 5/1919 Lofgren
1,347,631 A 7/1920 Jean
1,446,087 A 2/1923 Griffin
1,514,682 A 11/1924 Wilson
1,517,584 A 12/1924 Reece
1,771,366 A 7/1930 Wyss et al.
1,879,128 A 9/1932 Despe
1,968,509 A 7/1934 Tiffany
2,032,695 A 3/1936 Gimera
2,057,353 A 10/1936 Whittemore, Jr.
2,086,192 A 7/1937 Schumaker
2,104,266 A 1/1938 McCormick
2,140,516 A 12/1938 Cowan
2,461,664 A 2/1949 Smith
2,472,282 A 6/1949 Burchett
2,545,851 A 3/1951 Kardos
2,805,669 A 9/1957 Merino
2,959,664 A 11/1960 Fenn
3,060,429 A 10/1962 Winston
3,200,819 A 8/1965 Gilbert
3,203,025 A 8/1965 Schreur
3,234,357 A 2/1966 Seuthe
3,258,015 A 6/1966 Ellis et al.
3,281,637 A 10/1966 Hultquist
3,292,635 A 12/1966 Kolodny
3,316,919 A 5/1967 Green et al.
3,356,094 A 12/1967 Ellis et al.
3,385,303 A 5/1968 Hind
3,393,927 A 7/1968 Kelly et al.
3,398,754 A 8/1968 Tughan
3,419,015 A 12/1968 Wochnowski
3,424,171 A 1/1969 Rooker
3,428,053 A 2/1969 Schoenbaum
3,431,393 A 3/1969 Katsuda
3,476,118 A 11/1969 Gotthard Luttich
3,479,561 A 11/1969 Janning
3,486,508 A 12/1969 Sipos
3,502,588 A 3/1970 Winberg
3,516,417 A 6/1970 Moses
3,614,956 A 10/1971 Thornton
3,651,240 A 3/1972 Kirkpatrick
3,685,521 A 8/1972 Dock
3,685,522 A 8/1972 Kleinhans
3,738,374 A 6/1973 Bennett
3,747,120 A 7/1973 Stemme
3,766,000 A 10/1973 Gibson
3,844,294 A 10/1974 Webster
3,860,012 A 1/1975 Selke
3,878,850 A 4/1975 Gibson et al.
3,931,824 A 1/1976 Miano et al.
3,933,643 A 1/1976 Colvin
3,934,117 A 1/1976 Schladitz
3,943,941 A 3/1976 Boyd et al.
4,016,878 A 4/1977 Castel et al.
4,044,777 A 8/1977 Boyd et al.
4,054,145 A 10/1977 Berndt et al.
4,079,742 A 3/1978 Rainer et al.
4,131,117 A 12/1978 Kite et al.
4,150,677 A 4/1979 Osborne, Jr. et al.
4,168,712 A 9/1979 Labbe
4,190,046 A 2/1980 Virag
4,207,457 A 6/1980 Haglund
4,219,031 A 8/1980 Rainer et al.
4,219,032 A 8/1980 Tabatznik
4,233,993 A 11/1980 Miano et al.
4,259,970 A 4/1981 Green, Jr.
4,270,552 A 6/1981 Jenkins
4,284,089 A 8/1981 Ray
4,286,604 A 9/1981 Ehretsmann et al.
4,303,083 A 12/1981 Burruss, Jr.
4,326,544 A 4/1982 Hardwick et al.
4,340,072 A 7/1982 Bolt et al.
4,347,855 A 9/1982 Lanzillotti et al.
4,361,374 A 11/1982 Marmillion et al.
4,391,285 A 7/1983 Burnett et al.
4,449,541 A 5/1984 Mays et al.
4,484,376 A 11/1984 Glock et al.
4,506,682 A 3/1985 Muller
4,510,950 A 4/1985 Keritsis et al.
4,531,178 A 7/1985 Uke
4,550,967 A 11/1985 Riches et al.
4,583,559 A 4/1986 Hedge
4,589,428 A 5/1986 Keritsis
4,629,665 A 12/1986 Matsuo
4,635,651 A 1/1987 Jacobs
4,637,407 A 1/1987 Bonanno
4,674,519 A 6/1987 Keritsis et al.
4,676,237 A 6/1987 Wood
4,700,727 A 10/1987 Torigian
4,708,151 A 11/1987 Shelar
4,714,082 A 12/1987 Banerjee et al.
4,735,217 A 4/1988 Gerth et al.
4,756,318 A 7/1988 Clearman et al.
4,771,295 A 9/1988 Baker
4,771,795 A 9/1988 White et al.
4,771,796 A 9/1988 Myer
4,776,353 A 10/1988 Lilja et al.
4,793,365 A 12/1988 Sensabaugh, Jr. et al.
4,797,692 A 1/1989 Ims
4,800,903 A 1/1989 Ray et al.
4,807,809 A 2/1989 Pryor et al.

RAI Exhibit 2009
Ecto World v. RAI Strategic
IPR2024-01280

(56) **References Cited**

U.S. PATENT DOCUMENTS

4,819,665 A 4/1989 Roberts et al.
4,821,749 A 4/1989 Toft et al.
4,823,817 A 4/1989 Luke
4,830,028 A 5/1989 Lawson et al.
4,836,224 A 6/1989 Lawson et al.
4,836,225 A 6/1989 Sudoh
4,848,374 A 7/1989 Chard et al.
4,848,376 A 7/1989 Lilja et al.
4,874,000 A 10/1989 Tamol et al.
4,878,506 A 11/1989 Pinck
4,880,018 A 11/1989 Graves, Jr. et al.
4,887,619 A 12/1989 Burcham, Jr. et al.
4,892,109 A 1/1990 Strubel
4,893,639 A 1/1990 White
4,907,606 A 3/1990 Lilja et al.
4,913,168 A 4/1990 Potter et al.
4,917,119 A 4/1990 Potter et al.
4,917,121 A 4/1990 Riehl et al.
4,917,128 A 4/1990 Clearman et al.
4,920,990 A 5/1990 Lawrence et al.
4,922,901 A 5/1990 Brooks et al.
4,924,886 A 5/1990 Litzinger
4,924,888 A 5/1990 Perfetti et al.
4,928,714 A 5/1990 Shannon
4,938,236 A 7/1990 Banerjee et al.
4,941,483 A 7/1990 Ridings et al.
4,941,484 A 7/1990 Clapp et al.
4,941,486 A 7/1990 Dube
4,945,448 A 7/1990 Bremenour
4,945,929 A 8/1990 Egilmex
4,945,931 A 8/1990 Gori
4,947,874 A 8/1990 Brooks et al.
4,947,875 A 8/1990 Brooks et al.
4,961,438 A 10/1990 Korte
4,966,171 A 10/1990 Serrano et al.
4,968,263 A 11/1990 Silbernagel
4,969,476 A 11/1990 Bale et al.
4,972,854 A 11/1990 Kiernan et al.
4,972,855 A 11/1990 Kuriyama et al.
4,977,908 A 12/1990 Luke
4,981,522 A 1/1991 Nichols et al.
4,986,286 A 1/1991 Roberts et al.
4,987,906 A 1/1991 Young et al.
4,990,939 A 2/1991 Sekiya
4,991,606 A 2/1991 Serrano et al.
5,005,593 A 4/1991 Fagg
5,019,122 A 5/1991 Clearman et al.
5,020,548 A 6/1991 Farrier et al.
5,022,416 A 6/1991 Watson
5,025,814 A 6/1991 Raker
5,027,837 A 7/1991 Clearman et al.
5,033,483 A 7/1991 Clearman et al.
5,040,551 A 8/1991 Schlatter et al.
5,042,510 A 8/1991 Curtiss et al.
5,046,514 A 9/1991 Bolt
5,050,621 A 9/1991 Creighton et al.
5,056,537 A 10/1991 Brown et al.
5,060,667 A 10/1991 Strubel
5,060,669 A 10/1991 White et al.
5,060,671 A 10/1991 Counts et al.
5,060,676 A 10/1991 Hearn et al.
5,065,775 A 11/1991 Fagg
5,065,776 A 11/1991 Lawson et al.
5,072,744 A 12/1991 Luke et al.
5,074,319 A 12/1991 White et al.
5,074,321 A 12/1991 Gently et al.
5,076,296 A 12/1991 Nystrom et al.
5,076,297 A 12/1991 Farrier et al.
5,092,353 A 3/1992 Montoya et al.
5,093,894 A 3/1992 Deevi et al.
5,095,921 A 3/1992 Losee et al.
5,097,850 A 3/1992 Bmunshteyn et al.
5,099,861 A 3/1992 Clearman et al.
5,099,862 A 3/1992 White et al.
5,099,864 A 3/1992 Young et al.
5,101,839 A 4/1992 Jakob et al.
5,103,842 A 4/1992 Strang et al.
5,105,835 A 4/1992 Drewett et al.
5,105,836 A 4/1992 Gentry et al.
5,105,837 A 4/1992 Barnes et al.
5,105,838 A 4/1992 White et al.
5,115,820 A 5/1992 Hauser et al.
5,121,757 A 6/1992 White et al.
5,124,200 A 6/1992 Mallonee
5,129,409 A 7/1992 White
5,131,415 A 7/1992 Munoz et al.
5,137,034 A 8/1992 Perfetti et al.
5,143,097 A 9/1992 Stephen Sohn et al.
5,144,962 A 9/1992 Counts et al.
5,146,934 A 9/1992 Deevi et al.
5,148,821 A 9/1992 Best et al.
5,159,940 A 11/1992 Hayward et al.
5,159,942 A 11/1992 Brinkley et al.
5,177,424 A 1/1993 Connors
5,178,167 A 1/1993 Riggs et al.
5,179,966 A 1/1993 Losee et al.
5,183,062 A 2/1993 Clearman et al.
5,203,355 A 4/1993 Clearman et al.
5,211,684 A 5/1993 Shannon et al.
5,220,930 A 6/1993 Gentry
5,224,265 A 7/1993 Dux
5,224,498 A 7/1993 Deevi et al.
5,228,460 A 7/1993 Sprinkel et al.
5,230,354 A 7/1993 Smith et al.
5,235,992 A 8/1993 Sensabaugh, Jr.
5,240,014 A 8/1993 Deevi et al.
5,240,016 A 8/1993 Nichols et al.
5,243,999 A 9/1993 Smith
5,246,018 A 9/1993 Deevi et al.
5,247,947 A 9/1993 Clearman et al.
5,249,586 A 10/1993 Morgan et al.
5,255,674 A 10/1993 Oftedal et al.
5,261,424 A 11/1993 Sprinkel, Jr.
5,266,746 A 11/1993 Nishihara
5,269,327 A 12/1993 Counts et al.
5,271,419 A 12/1993 Arzonico et al.
5,282,798 A 2/1994 Bruse et al.
5,285,798 A 2/1994 Banerjee et al.
5,293,883 A 3/1994 Edwards
5,301,694 A 4/1994 Raymond et al.
5,303,720 A 4/1994 Banerjee et al.
5,318,050 A 6/1994 Gonzalez-Parra et al.
5,322,075 A 6/1994 Deevi et al.
5,322,076 A 6/1994 Brinkley et al.
5,327,915 A 7/1994 Porenski
5,327,917 A 7/1994 Lekwauwa et al.
5,331,981 A 7/1994 Tamaoki et al.
5,339,838 A 8/1994 Young et al.
5,345,951 A 9/1994 Serrano et al.
5,345,955 A 9/1994 Clearman et al.
5,353,813 A 10/1994 Deevi et al.
5,357,984 A 10/1994 Farrier et al.
5,360,023 A 11/1994 Blakley et al.
5,369,723 A 11/1994 Counts et al.
5,372,148 A 12/1994 McCafferty et al.
5,377,698 A 1/1995 Litzinger et al.
5,388,574 A 2/1995 Ingebrethsen
5,388,594 A 2/1995 Counts et al.
5,396,911 A 3/1995 Casey, III et al.
5,408,574 A 4/1995 Deevi et al.
5,415,186 A 5/1995 Casey, III et al.
5,435,325 A 7/1995 Clapp et al.
5,445,169 A 8/1995 Brinkley et al.
5,468,266 A 11/1995 Bensalem et al.
5,468,936 A 11/1995 Deevi et al.
5,479,948 A 1/1996 Counts et al.
5,497,791 A 3/1996 Bowen
5,498,850 A 3/1996 Das
5,498,855 A 3/1996 Deevi et al.
5,499,636 A 3/1996 Baggett, Jr. et al.
5,501,237 A 3/1996 Young et al.
5,505,214 A 4/1996 Collins et al.
5,515,842 A 5/1996 Ramseyer et al.
5,530,225 A 6/1996 Hajaligol

RAI Exhibit 2009
Ecto World v. RAI Strategic
IPR2024-01280

(56) **References Cited**

U.S. PATENT DOCUMENTS

5,533,530	A	7/1996	Young et al.
5,551,450	A	9/1996	Hemsley
5,551,451	A	9/1996	Riggs et al.
5,564,442	A	10/1996	MacDonald et al.
5,573,692	A	11/1996	Das et al.
5,588,446	A	12/1996	Clearman
5,591,368	A	1/1997	Fleischhauer et al.
5,593,792	A	1/1997	Farrier et al.
5,595,577	A	1/1997	Bensalem et al.
5,596,706	A	1/1997	Shimazaki et al.
5,598,868	A	2/1997	Jakob et al.
5,611,360	A	3/1997	Tang
5,613,504	A	3/1997	Collins et al.
5,613,505	A	3/1997	Campbell et al.
5,646,666	A	7/1997	Cowger
5,649,552	A	7/1997	Cho et al.
5,649,554	A	7/1997	Sprinkel et al.
5,659,656	A	8/1997	Das
5,665,262	A	9/1997	Hajaligol et al.
5,666,976	A	9/1997	Adams et al.
5,666,977	A	9/1997	Higgins et al.
5,666,978	A	9/1997	Counts et al.
5,687,746	A	11/1997	Rose et al.
5,692,525	A	12/1997	Counts et al.
5,692,526	A	12/1997	Adams et al.
5,703,633	A	12/1997	Gehrer
5,708,258	A	1/1998	Counts et al.
5,711,320	A	1/1998	Martin
5,715,844	A	2/1998	Young et al.
5,726,421	A	3/1998	Fleischhauer et al.
5,727,571	A	3/1998	Meiring et al.
5,730,158	A	3/1998	Collins et al.
5,732,685	A	3/1998	Nakamura
5,743,251	A	4/1998	Howell et al.
5,745,985	A	5/1998	Ghosh
5,750,964	A	5/1998	Counts et al.
5,778,899	A	7/1998	Saito et al.
5,799,663	A	9/1998	Gross et al.
5,816,263	A	10/1998	Counts et al.
5,819,751	A	10/1998	Barnes et al.
5,819,756	A	10/1998	Mielordt
5,829,453	A	11/1998	White et al.
5,865,185	A	2/1999	Collins et al.
5,865,186	A	2/1999	Volsey, II
5,878,752	A	3/1999	Adams et al.
5,880,439	A	3/1999	Deevi et al.
5,894,841	A	4/1999	Voges
5,915,387	A	6/1999	Baggett, Jr. et al.
5,934,289	A	8/1999	Watkins et al.
5,944,025	A	8/1999	Cook
5,954,979	A	9/1999	Counts et al.
5,967,148	A	10/1999	Harris et al.
5,996,589	A	12/1999	St. Charles
6,026,820	A	2/2000	Baggett, Jr. et al.
6,033,623	A	3/2000	Deevi et al.
6,040,560	A	3/2000	Fleischhauer et al.
6,053,176	A	4/2000	Adams et al.
6,062,213	A	5/2000	Fuisz
6,089,857	A	7/2000	Matsuura et al.
6,095,152	A	8/2000	Beven et al.
6,095,153	A	8/2000	Kessler et al.
6,102,036	A	8/2000	Slutsky
6,116,247	A	9/2000	Banyasz et al.
6,119,700	A	9/2000	Fleischhauer et al.
6,125,853	A	10/2000	Susa et al.
6,125,855	A	10/2000	Nevett et al.
6,125,866	A	10/2000	Nichols et al.
6,146,934	A	11/2000	Gardner et al.
6,155,268	A	12/2000	Takeuchi
6,164,287	A	12/2000	White
6,182,670	B1	2/2001	White et al.
6,196,218	B1	3/2001	Voges
6,196,219	B1	3/2001	Hess et al.
6,216,706	B1	4/2001	Kumar et al.
6,217,315	B1	4/2001	Mifune
6,232,784	B1	5/2001	Dulasky
6,234,167	B1	5/2001	Cox et al.
6,285,017	B1	9/2001	Brickell
6,289,898	B1	9/2001	Fournier et al.
6,311,561	B1	11/2001	Bang
6,322,268	B1	11/2001	Kaufmann
6,349,728	B1	2/2002	Pham
6,349,729	B1	2/2002	Meyer et al.
6,357,671	B1	3/2002	Cewers
6,397,852	B1	6/2002	McAdam
6,408,856	B1	6/2002	McAdam
6,418,938	B1	7/2002	Fleischhauer et al.
6,443,146	B1	9/2002	Voges
6,446,426	B1	9/2002	Sweeney et al.
6,476,151	B1	11/2002	Araki
6,501,052	B2	12/2002	Cox
6,516,796	B1	2/2003	Cox et al.
6,532,965	B1	3/2003	Abhulimen et al.
6,533,395	B2	3/2003	Dante et al.
6,537,186	B1	3/2003	Veluz
6,578,584	B1	6/2003	Beven et al.
6,591,841	B1	7/2003	White et al.
6,598,607	B2	7/2003	Adiga et al.
6,601,776	B1	8/2003	Oljaca et al.
6,615,840	B1	9/2003	Fournier et al.
6,620,659	B2	9/2003	Emma et al.
6,688,313	B2	2/2004	Wrenn et al.
6,690,121	B1	2/2004	Weindorf
6,701,936	B2	3/2004	Shafer et al.
6,715,494	B1	4/2004	McCoy
6,719,443	B2	4/2004	Gutstein
6,722,756	B2	4/2004	Choy et al.
6,722,763	B1	4/2004	Hsu
6,730,832	B1	5/2004	Dominguez et al.
6,739,700	B2	5/2004	Dante et al.
6,772,756	B2	8/2004	Shayan
6,803,545	B2	10/2004	Blake et al.
6,803,550	B2	10/2004	Sharpe et al.
6,808,407	B1	10/2004	Cannon
6,810,883	B2	11/2004	Felter et al.
6,823,873	B2	11/2004	Nichols et al.
6,854,461	B2	2/2005	Nichols
6,854,470	B1	2/2005	Pu
6,885,814	B2	4/2005	Saito
6,938,986	B2	9/2005	Macler
6,994,096	B2	2/2006	Rostami et al.
7,011,096	B2	3/2006	Li et al.
7,017,585	B2	3/2006	Li et al.
7,025,066	B2	4/2006	Lawson et al.
7,117,867	B2	10/2006	Cox et al.
7,159,464	B2	1/2007	Tohyama et al.
7,163,015	B2	1/2007	Moffitt
7,173,222	B2	2/2007	Cox et al.
7,173,322	B2	2/2007	Sakata et al.
7,185,659	B2	3/2007	Sharpe
7,234,470	B2	6/2007	Yang
7,284,424	B2	10/2007	Kanke
7,290,549	B2	11/2007	Banerjee et al.
7,293,565	B2	11/2007	Griffin et al.
7,337,782	B2	3/2008	Thompson
7,392,809	B2	7/2008	Larson et al.
7,445,007	B2	11/2008	Balch
7,513,253	B2	4/2009	Kobayashi et al.
7,647,932	B2	1/2010	Cantrell et al.
7,690,385	B2	4/2010	Moffitt
7,692,123	B2	4/2010	Baba et al.
7,726,320	B2	6/2010	Robinson et al.
7,775,459	B2	8/2010	Martens, III et al.
7,810,505	B2	10/2010	Yang
7,832,410	B2	11/2010	Hon
7,845,359	B2	12/2010	Montaser
7,878,209	B2	2/2011	Newbery et al.
7,896,006	B2	3/2011	Hamano et al.
7,997,280	B2	8/2011	Rosenthal
8,066,010	B2	11/2011	Newbery et al.
8,079,371	B2	12/2011	Robinson et al.
8,127,772	B2	3/2012	Montaser
8,156,944	B2	4/2012	Han
8,205,622	B2	6/2012	Pan

RAI Exhibit 2009
Ecto World v. RAI Strategic
IPR2024-01280

(56) **References Cited**

U.S. PATENT DOCUMENTS

8,314,591 B2 11/2012 Terry et al.
8,365,742 B2 2/2013 Hon
8,375,957 B2 2/2013 Hon
8,393,331 B2 3/2013 Hon
8,402,976 B2 3/2013 Fernando et al.
8,499,766 B1 8/2013 Newton
8,528,569 B1 9/2013 Newton
8,550,069 B2 10/2013 Alelov
8,833,364 B2 9/2014 Buchberger
8,851,068 B2 10/2014 Cohen et al.
8,899,238 B2 12/2014 Robinson et al.
8,950,587 B2 2/2015 Thomson et al.
9,259,035 B2 2/2016 Terry et al.
9,301,549 B2 4/2016 Liu
9,427,022 B2 8/2016 Levin et al.
9,462,832 B2 10/2016 Lord
9,549,573 B2 1/2017 Monsees et al.
9,714,878 B2 7/2017 Powers et al.
9,814,268 B2 11/2017 Robinson et al.
9,839,238 B2 12/2017 Worm et al.
9,930,915 B2 4/2018 Worm et al.
9,980,514 B2 5/2018 Malamud et al.
9,993,024 B2 6/2018 Liu
10,524,511 B2 1/2020 Worm et al.
2001/0026788 A1 10/2001 Piskorz
2001/0036365 A1 11/2001 Sanda et al.
2002/0146242 A1 10/2002 Vieira
2003/0011579 A1 1/2003 Gong
2003/0033055 A1 2/2003 McRae
2003/0108342 A1 6/2003 Sherwood
2003/0131859 A1 7/2003 Li et al.
2003/0189826 A1 10/2003 Yoon
2003/0226837 A1 12/2003 Blake et al.
2004/0020500 A1 2/2004 Wrenn et al.
2004/0020508 A1 2/2004 Earl
2004/0118401 A1 6/2004 Smith et al.
2004/0129280 A1 7/2004 Woodson et al.
2004/0149282 A1 8/2004 Hickle
2004/0149296 A1 8/2004 Rostami et al.
2004/0173229 A1 9/2004 Crooks et al.
2004/0198127 A1 10/2004 Yamamoto et al.
2004/0200488 A1 10/2004 Felter et al.
2004/0224435 A1 11/2004 Shibata et al.
2004/0226568 A1 11/2004 Takeuchi et al.
2004/0234916 A1 11/2004 Hale
2004/0255965 A1 12/2004 Perfetti et al.
2004/0261802 A1 12/2004 Griffin
2005/0005947 A1 1/2005 Hampl, Jr. et al.
2005/0016549 A1 1/2005 Banerjee et al.
2005/0016550 A1 1/2005 Katase
2005/0066986 A1 3/2005 Nestor et al.
2005/0067503 A1 3/2005 Katase
2005/0115243 A1 6/2005 Adle
2005/0151126 A1 7/2005 Yamakawa et al.
2005/0172976 A1 8/2005 Newman et al.
2005/0274390 A1 12/2005 Banerjee et al.
2006/0016453 A1 1/2006 Kim
2006/0032501 A1 2/2006 Hale et al.
2006/0070633 A1 4/2006 Rostami et al.
2006/0093977 A1 5/2006 Pellizzari
2006/0162733 A1 7/2006 McGrath et al.
2006/0185687 A1 8/2006 Hearn et al.
2006/0196518 A1 9/2006 Hon
2007/0030306 A1 2/2007 Okamura
2007/0062549 A1 3/2007 Holton, Jr. et al.
2007/0074734 A1 4/2007 Braunshteyn et al.
2007/0102013 A1 5/2007 Adams et al.
2007/0215167 A1 9/2007 Crooks et al.
2007/0267031 A1 11/2007 Hon
2007/0283972 A1 12/2007 Monsees et al.
2008/0085103 A1 4/2008 Beland et al.
2008/0092912 A1 4/2008 Robinson et al.
2008/0149118 A1 6/2008 Oglesby et al.
2008/0245377 A1 10/2008 Marshall et al.
2008/0257367 A1 10/2008 Paterno et al.
2008/0276947 A1 11/2008 Martzel
2008/0302374 A1 12/2008 Wengert et al.
2009/0065010 A1 3/2009 Shands
2009/0095311 A1 4/2009 Hon
2009/0095312 A1 4/2009 Herbrich et al.
2009/0126745 A1 5/2009 Hon
2009/0151717 A1 6/2009 Bowen et al.
2009/0188490 A1 7/2009 Hon
2009/0230117 A1 9/2009 Fernando et al.
2009/0260641 A1 10/2009 Monsees et al.
2009/0260642 A1 10/2009 Monsees et al.
2009/0272379 A1 11/2009 Thorens et al.
2009/0283103 A1 11/2009 Nielsen et al.
2009/0293892 A1 12/2009 Williams et al.
2009/0320863 A1 12/2009 Fernando et al.
2009/0320864 A1 12/2009 Rowley
2009/0324206 A1 12/2009 Young et al.
2010/0006113 A1 1/2010 Urtsev et al.
2010/0024834 A1 2/2010 Oglesby et al.
2010/0028766 A1 2/2010 Peckerar et al.
2010/0043809 A1 2/2010 Magnon
2010/0059070 A1 3/2010 Potter et al.
2010/0059073 A1 3/2010 Hoffmann et al.
2010/0065075 A1 3/2010 Banerjee et al.
2010/0083959 A1 4/2010 Siller
2010/0163063 A1 7/2010 Fernando et al.
2010/0200006 A1 8/2010 Robinson et al.
2010/0229881 A1 9/2010 Hearn
2010/0242974 A1 9/2010 Pan
2010/0242976 A1 9/2010 Katayama et al.
2010/0258139 A1 10/2010 Onishi et al.
2010/0300467 A1 12/2010 Kuistila et al.
2010/0307518 A1 12/2010 Wang
2010/0313901 A1 12/2010 Fernando et al.
2010/0319686 A1 12/2010 Schennum
2011/0005535 A1 1/2011 Xiu
2011/0011286 A1 1/2011 Strasser
2011/0011396 A1 1/2011 Fang
2011/0015513 A1 1/2011 Murá Yanez
2011/0036346 A1 2/2011 Cohen et al.
2011/0036363 A1 2/2011 Urtsev et al.
2011/0036365 A1 2/2011 Chong et al.
2011/0073121 A1 3/2011 Levin et al.
2011/0088707 A1 4/2011 Hajaligol
2011/0094523 A1 4/2011 Thorens et al.
2011/0120480 A1 5/2011 Gedevanishvili et al.
2011/0120482 A1 5/2011 Brenneise
2011/0126847 A1 6/2011 El-Shall et al.
2011/0126848 A1 6/2011 Zuber et al.
2011/0155153 A1 6/2011 Thorens et al.
2011/0155718 A1 6/2011 Greim et al.
2011/0162663 A1 7/2011 Bryman
2011/0168194 A1 7/2011 Hon
2011/0180082 A1 7/2011 Banerjee et al.
2011/0226236 A1 9/2011 Buchberger
2011/0265806 A1 11/2011 Alarcon et al.
2011/0290248 A1 12/2011 Schennum
2011/0290268 A1 12/2011 Schennum
2011/0309157 A1 12/2011 Yang et al.
2012/0042885 A1 2/2012 Stone et al.
2012/0060853 A1 3/2012 Robinson et al.
2012/0111347 A1 5/2012 Hon
2012/0132643 A1 5/2012 Choi et al.
2012/0186594 A1 7/2012 Liu
2012/0199146 A1 8/2012 Marangos
2012/0227752 A1 9/2012 Alelov
2012/0227753 A1 9/2012 Newton
2012/0231464 A1 9/2012 Yu et al.
2012/0260927 A1 10/2012 Liu
2012/0279512 A1 11/2012 Hon
2012/0318882 A1 12/2012 Abehasera
2013/0037031 A1 2/2013 Gredat
2013/0037041 A1 2/2013 Worm et al.
2013/0042865 A1 2/2013 Monsees et al.
2013/0056013 A1 3/2013 Terry et al.
2013/0081625 A1 4/2013 Rustad et al.
2013/0081642 A1 4/2013 Safari
2013/0192619 A1 8/2013 Tucker et al.
2013/0213418 A1 8/2013 Tucker et al.

RAI Exhibit 2009
Ecto World v. RAI Strategic
IPR2024-01260

(56) **References Cited**

U.S. PATENT DOCUMENTS

2013/0213419	A1	8/2013	Tucker et al.
2013/0220315	A1	8/2013	Conley et al.
2013/0228191	A1	9/2013	Newton
2013/0255702	A1	10/2013	Griffith, Jr. et al.
2013/0284192	A1	10/2013	Peleg et al.
2013/0298905	A1	11/2013	Levin et al.
2013/0306074	A1	11/2013	Bowditch et al.
2013/0306084	A1	11/2013	Flick
2013/0312742	A1	11/2013	Monsees et al.
2013/0312776	A1	11/2013	Newton
2013/0319431	A1	12/2013	Cyphert et al.
2013/0319439	A1	12/2013	Gorelick et al.
2013/0340750	A1	12/2013	Thorens et al.
2013/0340775	A1	12/2013	Juster et al.
2014/0000638	A1	1/2014	Sebastian et al.
2014/0014124	A1	1/2014	Glasberg et al.
2014/0020696	A1	1/2014	Liu
2014/0034071	A1	2/2014	Levitz et al.
2014/0060552	A1	3/2014	Cohen
2014/0060554	A1	3/2014	Collett et al.
2014/0060555	A1	3/2014	Chang et al.
2014/0076310	A1	3/2014	Newton
2014/0083442	A1	3/2014	Scatterday
2014/0096781	A1	4/2014	Sears et al.
2014/0096782	A1	4/2014	Ampolini et al.
2014/0109921	A1	4/2014	Chen
2014/0157583	A1	6/2014	Ward et al.
2014/0209105	A1	7/2014	Sears et al.
2014/0253144	A1	9/2014	Novak et al.
2014/0261408	A1	9/2014	DePiano et al.
2014/0261486	A1	9/2014	Potter et al.
2014/0261487	A1	9/2014	Chapman et al.
2014/0261489	A1	9/2014	Cadieux et al.
2014/0261495	A1	9/2014	Novak et al.
2014/0270727	A1	9/2014	Ampolini et al.
2014/0270729	A1	9/2014	DePiano et al.
2014/0270730	A1	9/2014	DePiano et al.
2014/0290674	A1	10/2014	Liu
2014/0305453	A1	10/2014	Hon
2014/0334804	A1	11/2014	Choi
2014/0345631	A1	11/2014	Bowen et al.
2014/0366898	A1	12/2014	Monsees et al.
2015/0020824	A1	1/2015	Bowen et al.
2015/0147055	A1	5/2015	Mino
2015/0201675	A1	7/2015	Lord
2015/0208729	A1	7/2015	Monsees et al.
2015/0245659	A1	9/2015	DePiano et al.
2016/0198767	A1	7/2016	Verleur

FOREIGN PATENT DOCUMENTS

CA	2 641 869		5/2010
CA	2 752 255		8/2010
CN	1135860		11/1996
CN	2 291 796	Y	9/1998
CN	2293957		10/1998
CN	2293957	Y	10/1998
CN	1233436	A	11/1999
CN	1333657		1/2002
CN	1530041	A	9/2004
CN	1541577		11/2004
CN	2719043		8/2005
CN	1775123		5/2006
CN	2777995		5/2006
CN	2819833		9/2006
CN	2870485		2/2007
CN	1931040		3/2007
CN	1931042		3/2007
CN	200997909	Y	1/2008
CN	101116542	A	2/2008
CN	201018927	Y	2/2008
CN	101176805	A	5/2008
CN	201085044	Y	7/2008
CN	201104488		8/2008
CN	201226774		4/2009
CN	201379072		1/2010
CN	201860753		6/2011
CN	102132957	A	7/2011
CN	201900065		7/2011
CN	202774133	U	3/2013
CN	103584287	A	2/2014
CN	104095291	A	10/2014
DE	2653133		5/1978
DE	2704218	A1	8/1978
DE	19854008		5/2000
DE	10 2006 004 484		8/2007
DE	10 2006 041 042	A1	3/2008
DE	20 2009 010 400	U1	11/2009
EP	0 283 672		9/1988
EP	0 295 122		12/1988
EP	0 342 538		11/1989
EP	0173845		11/1989
EP	0 358 114	A2	3/1990
EP	0 430 559	A2	6/1991
EP	0 430 566		6/1991
EP	0 501 419	A1	9/1992
EP	0 503 767		9/1992
EP	0 845 220		6/1998
EP	0 706 352		3/2002
EP	1 154 815		7/2004
EP	1 618 803		1/2006
EP	1 989 946		11/2008
EP	2022349		2/2009
EP	1 942 754		12/2010
EP	2 316 286	A1	5/2011
EP	2319334		5/2011
EP	2 468 116	A1	6/2012
EP	3 669 682		6/2022
ES	1070375		8/2009
GB	191125575	A	3/1912
GB	588117		5/1947
GB	755475		8/1956
GB	1 431 045		4/1976
GB	1444461		7/1976
GB	2 070 409		9/1981
GB	2469850		11/2010
JP	9075058		3/1997
JP	H09-326299		12/1997
JP	11075807		3/1999
JP	2949114		9/1999
JP	2000041654	A	2/2000
JP	P2001-291598		10/2001
KR	2002-0067473	A	8/2002
KR	10-0636287		10/2006
KR	10-0929382		12/2009
KR	100933516		12/2009
KR	200448259		3/2010
KR	20-20100006995		7/2010
KR	20110001457		2/2011
KR	20110004049		4/2011
KR	10-2011-0079584		7/2011
KR	20-2011-0006928	U	7/2011
KR	101069342		10/2011
KR	10-2012-0080287	A	7/2012
KR	10-1241782		3/2013
KR	2013-0127412		11/2013
WO	WO 86/02528	A1	5/1986
WO	WO 95/27412		10/1995
WO	WO 96/32854		10/1996
WO	WO 97/48293		12/1997
WO	WO 98/16125		4/1998
WO	WO 98/57556		12/1998
WO	WO 00/28842		5/2000
WO	WO 00/28843	A1	5/2000
WO	WO 00/28844		5/2000
WO	WO 02/37990	A2	5/2002
WO	WO 2004/095955	A1	3/2004
WO	WO 2004/043175		5/2004
WO	WO 2004/080216	A1	9/2004
WO	WO 2004/098324		11/2004
WO	WO 2005/099494	A1	3/2005
WO	WO 2005/032285		4/2005
WO	WO 2005/039326		5/2005
WO	WO 2006/098936		9/2006

RAI Exhibit 2009
Ecto World v. RAI Strategic
IPR2024-01280

(56) **References Cited**

FOREIGN PATENT DOCUMENTS

WO	WO 2007/015735		2/2007
WO	WO 2007/042941		4/2007
WO	WO 2007/077167		7/2007
WO	WO 2007/078273		7/2007
WO	WO 2007/131449		11/2007
WO	WO 2008/139411		11/2008
WO	WO 2009/105919		9/2009
WO	WO 2009/155734		12/2009
WO	WO 2010/003480		1/2010
WO	WO 2010/045670		4/2010
WO	WO 2010/073122	A1	7/2010
WO	WO 2010/091593		8/2010
WO	WO 2010/118644		10/2010
WO	WO 2010/140937		12/2010
WO	WO 2011/010334		1/2011
WO	WO 2011/050964		5/2011
WO	WO 2010/073122	B2	7/2011
WO	WO 2011/081558		7/2011
WO	WO 2011/147699		12/2011
WO	WO 2012/062600		5/2012
WO	WO 2012/072762		6/2012
WO	WO 2012/142293		10/2012
WO	WO 2012/174677		12/2012
WO	WO 2013/025921		2/2013
WO	WO 2013/089551		6/2013
WO	WO 2013/098396		7/2013
WO	WO 2013/098405		7/2013
WO	WO 2013/102611		7/2013
WO	WO 2013/147492		10/2013
WO	WO 2014/012906		1/2014
WO	WO 2014/012907		1/2014
WO	WO 2015/130598		9/2015

OTHER PUBLICATIONS

"(±)-nicotine," ChemSpider, [online], 2019, retrieved from the Internet, [retrieved Jan. 16, 2019], <URL: http://www.chemspider.com/Chemical-Structure.917.html>. (Year: 2019).

"Coresta Recommended Method No. 76; Determination of Moisture Content (Oven Volatiles) of Tobacco and Tobacco Products" CRM 76, Jul. 2017.

Aug. 13, 2020—717260—Respondents' notice of prior art (Public).

Dec. 18, 2020—728462—Respondents' pre-hearing brief, Part 1 of 2 (Public).

Dec. 18, 2020—728462—Respondents' pre-hearing brief, Part 2 of 2 (Public).

Dec. 18, 2020—728487—Complainants' Pre-Hearing Trial Brief, Part 1 of 8 (Public).

Dec. 18, 2020—728487—Complainants' Pre-Hearing Trial Brief, Part 2 of 8 (Public).

Dec. 18, 2020—728487—Complainants' Pre-Hearing Trial Brief, Part 3 of 8 (Public).

Dec. 18, 2020—728487—Complainants' Pre-Hearing Trial Brief, Part 4 of 8 (Public).

Dec. 18, 2020—728487—Complainants' Pre-Hearing Trial Brief, Part 5 of 8 (Public).

Dec. 18, 2020—728487—Complainants' Pre-Hearing Trial Brief, Part 6 of 8 (Public).

Dec. 18, 2020—728487—Complainants' Pre-Hearing Trial Brief, Part 7 of 8 (Public).

Dec. 18, 2020—728487—Complainants' Pre-Hearing Trial Brief, Part 8 of 8 (Public).

Jan. 19, 2021—731208—Staff's pre-hearing brief Part 1 of 2 (Public).

Jan. 19, 2021—731208—Staff's pre-hearing brief Part 2 of 2 (Public).

Feb. 22, 2021—734799—Respondents Post-Hearing Initial Brief (Public).

A Presentation of Coresta, updated Sep. 2019, pp. 1-7.

Amended Complaint for Patent Infringement, *RAI Strategic Holdings, Inc.* v. *Altria Client Services LLC*, No. 1:20-cv-00393-LO-TCB, filed Jul. 13, 2020: Exhibit 2007 *Philip Morris Products, S.A.* v. *RAI Strategic Holdings. Inc.* IPR2020-00921.

American Heritage College Dictionary (4th ed. 2010), p. 386.

Andrus et al., "Nicotine Microaerosol Inhaler", Can Respir Journal, vol. 6, No. 6, 1999, pp. 509-512.

Ariat-Technology, Honeywell Sensing and Productivity Solutions, accessed 2021, https://www.ariat-tech.com/parts/honeywell-sensing-and-productivity-solutions/CPCL04GC.

Author Unknown, "Beta Patent Review Meeting," 1995, p. 6, www.industrydocuments.ucsf.edu/docs/#id=tpfn0023.

Author Unknown, "Cigarette Brainstorming Team No. 2," May 1994, www.industrydocuments.ucsf.edu/docs/#id=gqcv0119.

Author Unknown, "Heater Development," Mar. 1994 www.industrydocuments.ucsf.edu/docs/#id=hxwy0118.

Author Unknown, "Philip Morris Patent Database Search Invention Disclosures Dating From About 800000 to Present for which Patent Applications Were Not Filed," 1996, p. 65, www.industrydocuments.ucsf.edu/docs/#id=kgdl0071.

Author Unknown, "Project Beta Core Teams—Ashland," May 1994, www.industrydocuments.ucsf.edu/docs/#id=szjn0076.

Barbara Demick, *A High-Tech Approach To Getting A Nicotine Fix*. L.A. Times (Apr. 25, 2009), https://www.latimes.com/archives/la-xpm-2009-apr-25-fg-china-cigarettes25-story.html.

Barney J. Feder, Reynolds Expands Test of Smokeless Cigarette, N.Y. Times, Apr. 30, 1996, at D10.

Beta Patent review meeting, p. 6, 1995.

Bourlas, M.C., et al., "The Generation of Water in the Tobacco Oven Volatile Test", 1980, *Beitraege zur Tabakforschung International*, vol. 10(3), pp. 149-154.

Brief of Amicus Curiae Fitbit, Inc. in Support of Plaintiffs' Motion for Summary Judgment, *Apple Inc.* v. *Iancu*, No. 20-cv-06128-EJD (N.D. Cal Dec. 23, 2020), ECF No. 81-1.

Cambridge Dictionary of American English (2nd ed. 2008), p. 715.

Chambers Dictionary of Science and Technology (Peter M.B. Walker, ed., 1999), pp. 261, 975.

Chemical and Biological Studies on New Cigarette Prototypes that Heat Instead of Burn Tobacco, R. J. Reynolds Tobacco Company Monograph, 1988, pp. 43-72.

Chemical and Biological Studies on New Cigarette Prototypes that Heat Instead of Burn Tobacco, R.J. Reynolds Tobacco Company Monograph (1988) ("RJR monograph") (excerpts).

Civil docket report for *RAI Strategic Holdings, Inc.* v. *Altria Client Services LLC*, No. 1:20-cv-00393-LO-TCB (E.D. Va. filed Apr. 9, 2020).

Civil Minutes, *Ancora Technologies, Inc.* v. *TCT Mobile (US), Inc., et al.*, No. SACV 19-2192-GW-ADSx (C.D. Cal. Nov. 12, 2020).

Claim Construction Order, *RAI Strategic Holdings, Inc.* v. *Altria Client Services LLC*, No. 1:20-cv-00393-LO-TCB (E.D. Va. Nov. 24, 2020), ECF No. 360.

Comments of The American Conservative Union in *Certain Tobacco Heating Articles and Components Thereof*, No. 337-3447 (U.S.I.T.C. Apr. 22, 2020).

Commission Investigative Staff's Opening Claim Construction Brief in *Certain Tobacco Heating Articles and Components Thereof*, No. 337-TA-1199 (U.S.I.T.C. Aug. 21, 2020).

Commission Investigative Staff's Responsive Claim Construction Brief in *Certain Tobacco Heating Articles and Components Thereof*, No. 337-TA-1199 (U.S.I.T.C. Sep. 4, 2020).

Communication of Further Notices of Opposition filed in corresponding European Application No. 19151511.3, U.S. Pat. No. 3,491,944, dated Mar. 16, 2021, 27 pages.

Communication of Further Notices of Opposition filed in corresponding European Application No. 19151511.3, U.S. Pat. No. 3,491,944, dated Mar. 16, 2021, 63 pages.

Complainants RAI Strategic Holdings, Inc., R.J. Reynolds Vapor Company, and R.J. Reynolds Tobacco Company's Infringement Claim Chart for U.S. Pat. No. 9,839,238 from ITC Inv. No. 337-TA-1199.

Complainants' Opening Claim Construction Brief in *Certain Tobacco Heating Articles and Components Thereof*, No. 337-TA-1199 (U.S.I.T.C. Aug. 21, 2020).

RAI Exhibit 2009
Ecto World v. RAI Strategic
IPR2024-01280

(56) **References Cited**

OTHER PUBLICATIONS

Complainants' Responsive Claim Construction Brief in *Certain Tobacco Heating Articles and Components Thereof*, No. 337-TA-1199 (U.S.I.T.C. Sep. 4, 2020).
Complaint and Public Interest Statement in *Certain Tobacco Heating Articles and Components Thereof*, ITC Inv. No. 337-TA-1199.
Complaint for Patent Infringement in *RAI Strategic Holdings, Inc.* v. *Altria Client Services LLC*, No. 1:20-cv-393 (E.D. Va. Apr. 9, 2020).
Concise Oxford English Dictionary (11th ed., 2008), pp. 311, 1213.
Consent Order in *RAI Strategic Holdings, Inc.* v. *Altria Client Services LLC*, No. 1:20-cv-393 (E.D. Va. May 4, 2020).
Coresta, Physical Test Methods Sub-Group Technical Report: Tobacco Moisture, Water and Oven Volatiles, Jul. 2014.
Coresta, Tobacco and Tobacco Products Analytes Sub-Group Technical Report: 2018 Moisture (OV), Water by Karl Fischer and Gas Chromatography Interlaboratory Study, Aug. 2018.
Curriculum Vitae of Dr. Deevi.
Curriculum Vitae of Dr. Seetharama C. Deevi.
Curriculum Vitae of Samir Nayfeh, Ph.D.
Curriculum Vitae of Stewart Fox.
D. Kirk Davidson, Selling Sin: The Marketing of Socially Unacceptable Products (2d ed. 2003).
Decision Denying Institution of Inter Partes Review in Inter Partes Review of U.S. Pat. No. 9,814,268, dated Nov. 16, 2020.
Decision Denying Institution of Inter Partes Review of U.S. Pat. No. 9,839,238 (Jan. 19, 2021).
Decision Denying Patent Owner's Request for Rehearing in Inter Partes Review of U.S. Pat. No. 9,930,915, dated Feb. 25, 2022.
Decision Denying Petitioner's Request for Rehearing in Inter Partes Review of U.S. Pat. No. 9,839,238 (Jul. 30, 2021).
Decision Granting Institution of Inter Partes Review in Inter Partes Review of U.S. Pat. No. 9,930,915, dated Jan. 25, 2021.
Decision Granting Request for Rehearing and Granting Institution of Inter Partes Review in Inter Partes Reexamination of U.S. Pat. No. 9,814,268, dated Aug. 5, 2021.
Decision of the Opposition Division dated Jul. 20, 2021 in corresponding European Application No. 18173918.6.
Declaration of Charles E. Clemens in Inter Partes Review of U.S. Pat. No. 9,930,915, dated Apr. 16, 2021.
Declaration of Dr. Deevi in Support of Petition for Inter Partes Review of '915 Patent ("Deevi Decl.").
Declaration of Dr. Seetharama C. Deevi in Support of Petition for Inter Partes Review of '268 Patent.
Declaration of Dr. Seetharama C. Deevi in Support of Petition for Inter Partes Review of '123 Patent.
Declaration of Dr. Seetharama C. Deevi in Support of Petitions for PTAB Review of '542 Patent ("Deevi Decl.").
Declaration of Dr. Seetharama Deevi in support of Petitioner's Reply in Inter Partes Review of U.S. Pat. No. 9,930,915, dated Jul. 10, 2021.
Declaration of Jonathan M. Strang in Response to Patent Owner's Objections to Petitioner's Exhibits [served Aug. 12, 2021, not filed].
Declaration of Samir Nayfeh, Ph.D. in Support of Petition for Inter Partes Review of '238 Patent ("Nayfeh Decl.").
Declaration of Stewart Fox in Support of Petition for Inter Partes Review of '123 Patent.
Defendants' Unopposed Motion to Invoke the Statutory Stay of Plaintiffs' Claims Relating to U.S. Pat. Nos. 9,839,238, 9,901,123, and 9,930,915 Pursuant to 28 U.S.C. § 1659 in *RAI Strategic Holdings, Inc.* v. *Altria Client Services LLC*, No. 1:20-cv-393 (E.D. Va. Jun. 12, 2020).
Douglas C. McGill, 'Smokeless' Cigarette's Hapless Start, N.Y. Times, Nov. 19, 1988, at 33.
Email exchange among Carolyn Carpenter, John Robinson et al. regarding electric cigarette, available at https://www.industrydocuments.ucsf.edu/docs/nsxy0228.
Email from Jonathan Strang "Precedential Opinion Panel Request: IPR2020-00921 (U.S. Pat. No. 9,814,268)", Exhibit 3002 in Inter Partes Review of U.S. Pat. No. 9,814,268, dated Dec. 15, 2020.
Email from Jonathan Strang "Precedential Opinion Panel Request: IPR2020-01097 (U.S. Pat. No. 9,839,238)" Exhibit 3001 in Inter Partes Review of U.S. Pat. No. 9,839,238 (Feb. 18, 2021).
Excerpts from James W. Dally, Packaging of Electronic Systems: A Mechanical Engineering Approach (1990), 18 pgs.
Extended European Search Report, EP 17 18 5645, dated Nov. 28, 2017.
FDA News release, *FDA Authorizes Marketing of IQOS Tobacco Heating System with 'Reduced Exposure' Information* (Jul. 7, 2020), https://www.fda.gov/news-events/press-announcements/fda-authorizesmarketing-iqos-tobacco-heating-system-reduced-exposure-information.
FDA News Release, FDA Permits Sale of IQOS Tobacco Heating System Through Premarket Tobacco Product Application Pathway (Apr. 30, 2019).
FDA News release, *FDA permits sale of IQOS Tobacco Heating System through premarket tobacco product application pathway* (Apr. 30, 2019), https://www.fda.gov/news-events/press-announcements/fdapermits-sale-iqos-tobacco-heating-system-through-premarket-tobaccoproduct-application-pathway.
File history for U.S. Pat. No. 9,814,268.
File History regarding U.S. Pat. No. 10,588,355 ("'355 FH").
File History regarding U.S. Pat. No. 9,839,238.
George Wypych, *Handbook of Polymers* (2d ed. 2016).
Hajaligol et al., "Method of Making a Heather with Bullet Shape (Design) to be Used in the Beta Article, Specifically Useful for Beta Cigarettes Made with Cut Filler" May 1994, Invention Record www.industrydocuments.ucsf.edu/docs/#id=mhpp0217.
Hajaligol, M. R., "Method of Making a Heater With Bullet Shape," Mar. 1994. Philip Morris Records; Master Settlement Agreement. https://www.industrydocuments.ucsf.edu/docs/ktbn0130.
Harvard School of Public Health, Division of Public Health Practice, Potentially Reduced Exposure Tobacco Products—A Public Health Information Guide (2008) ("Eclipse-Premier").
Hon Lik, *I Was Sure That The Electronic Cigarette Would Be Welcomed With Open Arms*, Sciences at Avenir (Oct. 7, 2013) https://www.sciencesetavenir.fr/sante/i-was-sure-that-the-electronic-cigarette-would-be-welcomed-with-open-arms_26020 (updated Oct. 18, 2013).
Honeywell datasheet for Pressure Sensors, 160PC Series ("Honeywell datasheet").
Honeywell Microbridge Mass Airflow Sensor/Unamplified, AWM2000 Series.
Horowitz, et al., The Art of Electronics, 1980, pp. 33-35.
IEEE 100, The Authoritative Dictionary of IEEE Standards Terms (7th ed. 2000), pp. 230, 234.
In re Court Operations Under the Exigent Circumstances Created by the Outbreak of Coronavirus Disease 2019 (COVID-19): Temporary Suspension of Criminal Jury Trials (E.D. Va. Nov. 16, 2020).
Inhalation Technology, Dr. Donald E. Garden, ed., vol. 12, No. 5, pp. 1-58, (2000).
IQOS—A New Era in Tobacco (2014).
J.P. Hammond et al., Brazing Ceramic Oxides to Metals at Low Temperatures, Welding Research Supplement, 227-232-s (1998) ("Hammond Brazing").
J.R. Davis, Joining, Metals Handbook Desk Edition, 1049-1056 (2d ed. 1998) ("ASM Joining").
James A. Speck, Mechanical Fastening, Joining, and Assembly, Marcel Dekker, Inc. 1997, 4 pgs.
Joint Proposed Discovery Plan Pursuant to Rule 26(f), *RAI Strategic Holdings, Inc.* v. *Altria Client Services LLC*, No. 1:20-cv-00393-LO-TCB (E.D. Va. Sep. 2, 2020), ECF No. 97.
Joint Proposed Procedural Schedule in *Certain Tobacco Heating Articles and Components Thereof*, ITC Inv. No. 337-TA-1199 (U.S.I.T.C. Jun. 9, 2020).
Jones J. et al. Cigarette Brainstorming Team No. 2. May 13, 1994. Philip Morris Records; Master Settlement Agreement. Unknown. https://www.industrydocuments.ucsf.edu/docs/gqcv0119.
Judgment Final Written Decision Determining All Challenged Claims Unpatentable in Inter Partes Review of U.S. Pat. No. 9,814,268, dated Jun. 30, 2022.

RAI Exhibit 2009
Ecto World v. RAI Strategic
IPR2024-01280

(56) **References Cited**

OTHER PUBLICATIONS

Judgment Final Written Decision Determining All Challenged Claims Unpatentable in IPR2020-01094, Inter Partes Review of U.S. Pat. No. 9,930,915, dated Jan. 11, 2022.
Judgment Final Written Decision in Inter Partes Review of U.S. Pat. No. 9,901,123, dated Mar. 30, 2022.
Kevin Hatch, et al., *Preliminary Evaluation of a Commercially Available Electric Aerosol Inhaler from China* (Sep. 14, 2006) ("RJR Teardown"), available at https://www.industrydocuments.ucsf.edu/docs/nyvy0228.
Laroy, B; Utsch, F. An Outline of Permanent Heater / Disposable Flavor Insert Concepts. Nov. 1991. Philip Morris Records; Master Settlement Agreement. Unknown. https://www.industrydocuments.ucsf.edu/docs/ygcc0114.
Laroy, et al., "An Outline of Permanent Heater/Disposable Flavor Insert Cncepts," Nov. 1991, www.industrydocuments.ucsf.edu/docs/#id=jxbh0090.
Letter accompanying subsequently filed items, Further Written Submissions filed in corresponding European Application No. 19151511.3, U.S. Pat. No. 3,491,944, dated Dec. 13, 2021.
Letter from David M. Maiorana, counsel for Complainants, to The Honorable Lisa R. Barton, regarding *Certain Tobacco Heating Articles and Components Thereof*, No. 337-TA-1199 (U.S.I.T.C. Apr. 9, 2020).
Letter from Maximillian Grant, counsel for Defendants, to David Maiorana, counsel for Plaintiffs, regarding *RAI Strategic Holdings, Inc.* v. *Altria Client Services LLC*, No. 1:20-cv-00393-LO-TCB (Sep. 18, 2020).
Letter from Robert B. Swierupski, Director, National Commodity Specialist Division, to Mark Weiss, Weiss & Moy, P.C. regarding tariff classification ruling (Aug. 22, 2006), https://rulings.cbp.gov/ruling/M85579.
Lish, Tom, What is the difference between Vented and Sealed Gauge Reference Pressure, Setra, Jan. 26, 2017, https://www.setra.com/blog/what-is-the-difference-between-vented-and-sealed-gauge-reference-pressure.
Lu, Zhang, "Safe Substitute", China Daily, Jul. 11, 2005.
Mark's Standard Handbook for Mechanical Engineers, Eugene A. Avallone et al., published 1978, p. 15-6.
McGraw-Hill Dictionary of Electrical and Computer Engineering (2003), p. 479.
Memorandum in Support of Defendants' Partial Motion to Stay Plaintiffs' Claims Regarding U.S. Pat. Nos. 9,814,268 and 10,492,542, *RAI Strategic Holdings, Inc.* v. *Altria Client Services LLC*, No. 1:20-cv-00393-LO-TCB (E.D. Va. Nov. 27, 2020), ECF No. 371.
Merriam-Webster's Collegiate Dictionary (10th ed., 2001), (excerpt).
Modern Dictionary of Electronics (7th ed., 1999), pp. 151, 636, 637.
Modification of Limited Exclusion Order and Cease and Desist Order; Termination of the Modification Proceeding as to U.S. Pat. No. 6,377,577 and Suspension of the Modification Proceeding as to U.S. Pat. No. 7,224,668 in *Certain Network Devices, Related Software and Components Thereof*, No. 337-TA-945 (U.S.I.T.C. Jun. 26, 2018) ("Commission Order").
Monique Williams & Prue Talbot, Variability Among Electronic Cigarettes in the Pressure Drop, Airflow Rate, and Aerosol Production, 13 Nicotine & Tobacco Research 1276-84 (Dec. 2011) ("Williams and Talbot").
Morgan et al., "Philip Morris USA Invention Record," Oct. 1988, www.industrydocuments.ucsf.edu/docs/#id=znbc0114.
Mosdesign Semiconductor Corp. Datasheet for M1600 LED Drivers ("Mosdesign M1600 Datasheet"), 1 pg.
MPL 502 Series Specifications, Micro Pneumatic Logic, Inc., (Mar. 11, 2006), http://www.pressureswitch.com/PDFs/0502STANDARDA.pdf [https://web.archive.org/web/20060311132848 / http://www.pressureswitch.com/PDFs/0502STANDARDA.pdf], 17 pgs.
MPL Pressure Switch Solutions, Micro Pneumatic Logic, Inc., (Product Brochure) (Mar. 11, 2006), http://www.pressureswitch.com/PDFs/2000_MPLBrochure.pdf [https://web.archive.org/web/20060311132419/ http://www.pressureswitch.com/PDFs/2000_MPLBrochure.pdf]. 2 pgs.
N.A. Fuchs, The Mechanics of Aerosols (1989), 22 pgs.
Notice of Opposition filed in corresponding European Application No. 18173918.6, U.S. Pat. No. 3,398,460 dated Apr. 14, 2020.
Notification of Receipt of POP Request in Inter Partes Review of U.S. Pat. No. 9,839,238 (dated Mar. 24, 2021).
Order Granting Defendants' Unopposed Motion to Invoke the Statutory Stay of Plaintiffs' Claims Relating to U.S. Pat. Nos. 9,839,238, 9,901,123, and 9,930,915 Pursuant to 28 U.S.C. § 1659 in *RAI Strategic Holdings, Inc.* v. *Altria Client Services LLC*, No. 1:20-cv-393 (E.D. Va. Jun. 18, 2020).
Order No. 28: Construing Certain Claims in *Certain Tobacco Heating Articles and Components Thereof*, No. 337-TA-1199 (U.S. I.T.C. Jan. 6, 2021).
Order No. 8 in *Certain Laser-driven Light Sources, Subsystems Containing Laser-driven Light Sources, and Products Containing Same*, No. 337-TA-983 (U.S.I.T.C. Mar. 3, 2016).
Order No. 8, Amending Ground Rules in *Certain Tobacco Heating Articles and Components Thereof*, No. 337-TA-1199 (U.S.I.T.C. Jul. 27, 2020).
Order, *Bushnell Hawthorne, LLC* v. *Cisco Systems, Inc.*, No. 1:18-cv-760 (E.D. Va. Apr. 22, 2019).
Order, *RAI Strategic Holdings, Inc.* v. *Altria Client Services LLC*, No. 1:20-cv-00393-LO-TCB (E.D. Va. Dec. 4, 2020), ECF No. 426.
Order, *RAI Strategic Holdings, Inc.* v. *Altria Client Services LLC*, No. 1:20-cv-00393-LO-TCB (E.D. Va. Dec. 7, 2020), ECF No. 432.
Order, *RAI Strategic Holdings, Inc.* v. *Altria Client Services LLC*, No. 1:20-cv-393 (E.D. Va. Feb. 16, 2021).
Ott, Henry W., Noise Reduction Techniques in Electronic Systems, (2d E. 1988), pp. 286-293.
Oxford Dictionary of English (3d ed. 2010), p. 477.
Patent Owner Preliminary Response in Inter Partes Review of U.S. Pat. No. 9,814,268 dated Aug. 17, 2020.
Patent Owner Preliminary Response in Inter Partes Review of U.S. Pat. No. 9,839,238 (dated Oct. 27, 2020).
Patent Owner Preliminary Response in Inter Partes Review of U.S. Pat. No. 9,930,915 dated Oct. 27, 2020.
Patent Owner Response to Petition for Inter Partes Review Pursuant to 37 C.F.R. § 42.220 in Inter Partes Review of U.S. Pat. No. 9,814,268, dated Dec. 6, 2021.
Patent Owner Response to Petition for Inter Partes Review Pursuant to 37 C.F.R. § 42.220 in Inter Partes Review of U.S. Pat. No. 9,930,915, dated Apr. 19, 2021.
Patent Owner Sur-Reply in Inter Partes Review of U.S. Pat. No. 9,814,268, dated Apr. 11, 2022.
Patent Owner Sur-Reply in Inter Partes Review of U.S. Pat. No. 9,930,915, dated Aug. 30, 2021.
Patent Owner's Demonstratives for Oral Argument: RAI's PTAB Presentation, *Philip Morris Products, S.A.* v. *RAI Strategic Holdings, Inc.*, IPR2020-00921, Exhibit 2011, May 11, 2022.
Patent Owner's Infringement Chart for '123 patent, In the Matter of Certain Tobacco Heating Articles and Components Thereof, Inv. No. ___, EDIS Doc. ID 707369 (filed Apr. 9, 2020).
Patent Owner's Mandatory Notices in Inter Partes Review of U.S. Pat. No. 9,839,238, dated Jul. 2, 2020.
Patent Owner's Rehearing Request in Inter Partes Review of U.S. Pat. No. 9,930,915, dated Feb. 10, 2022.
Patent Owner's Sur-Reply to Petitioner's Reply to Patent Owner's Preliminary Response in Inter Partes Review of U.S. Pat. No. 9,814,268, dated Sep. 29, 2020.
Patent Owner's Sur-Reply to Petitioner's Reply to Patent Owner's Preliminary Response in Inter Partes Review of U.S. Pat. No. 9,839,238 (dated Dec. 10, 2020).
Patent Owner's Sur-Reply to Petitioner's Reply to Patent Owner's Preliminary Response in Inter Partes Review of U.S. Pat. No. 9,930,915, dated Dec. 10, 2020.
Petition for Inter Partes Review of U.S. Pat. No. 10,492,542.
Petition for Inter Partes Review of U.S. Pat. No. 9,839,238.
Petition for Inter Partes Review of U.S. Pat. No. 9,930,915.
Petition for Inter Partes Review of U.S. Pat. No. 9,814,268, submitted May 8, 2020.
Petition for Inter Partes Review of U.S. Pat. No. 9,901,123, submitted May 8, 2020.

RAI Exhibit 2009
Ecto World v. RAI Strategic
IPR2024-01280

(56) **References Cited**

OTHER PUBLICATIONS

Petition for Inter Partes Review of U.S. Pat. No. 9,901,123, submitted Sep. 18, 2020.
Petition for Post-Grant Review of U.S. Pat. No. 10,492,542.
Petitioner's Demonstratives: *Philip Morris Products, S.A.* v. *RAI Strategic Holdings, Inc.*, IPR2020-00921, May 11, 2022.
Petitioner's Demonstratives: *Philip Morris Products, S.A.* v. *RAI Strategic Holdings, Inc.*, IPR2020-01094, in Inter Partes Review of U.S. Pat. No. 9,930,915, Oct. 27, 2021.
Petitioner's Reply in Inter Partes Review of U.S. Pat. No. 9,814,268, dated Feb. 28, 2022.
Petitioner's Reply in Inter Partes Review of U.S. Pat. No. 9,930,915, dated Jul. 12, 2021.
Petitioner's Reply to Patent Owner Preliminary Response in Inter Partes Review of U.S. Pat. No. 9,814,268, dated Sep. 18, 2020.
Petitioner's Reply to the Patent Owner Preliminary Response in Inter Partes Review of U.S. Pat. No. 9,839,238 (dated Nov. 25, 2020).
Petitioner's Reply to the Patent Owner Preliminary Response in Inter Partes Review of U.S. Pat. No. 9,930,915 (dated Nov. 25, 2020).
Petitioner's Request for Rehearing of Decision Denying Institution in Inter Partes Review of U.S. Pat. No. 9,839,238 (dated Feb. 18, 2021).
Petitioner's Updated Mandatory Notices in Inter Partes Review of U.S. Pat. No. 9,839,238 (dated May 11, 2021).
Philip Morris Incorporated Invention Record (dated Oct. 11, 1988).
Philip Morris Incorporated Invention Record (submitted May 19, 1994; witnessed May 23, 1994).
Philip Morris Int'l, 2019 Third-Quarter Results Presentation (Oct. 17, 2019).
Philip Morris Int'l, The IQOS Heating System, Tobacco Products Scientific Advisory Committee Presentation (Jan. 24, 2018).
Philip Morris Products SA's Comments to Complainants' Public Interest Statement in *Certain Tobacco Heating Articles and Components Thereof*, No. 337-TA-3447 (U.S.I.T.C. Apr. 23, 2020).
Philip Morris U.S.A. interoffice correspondence from R.H. Moffitt to K. Torrence regarding operational analysis of SBT Ruyan Atomizing Nicotine Inhaler (dated Sep. 27, 2004) (Original).
Philip Morris U.S.A. interoffice correspondence from R.H. Moffitt to K. Torrence regarding operational analysis of SBT Ruyan Atomizing Nicotine Inhaler (dated Sep. 27, 2004), https://www.industrydocuments.ucsf.edu/docs/fnpb0219.
Pilot Corp. Stores Offer Ruyan Smoking Alternatives in Knoxville, Tenn.-Area Convenience Stores; Ruyan Vegas(R) Disposable E-Cigar in Select Stores in December; Jazz Disposable E-Cigarette Will Premier in Next 30 Days, PR Newswire, Dec. 16, 2008.
Plaintiffs' Notice of Motion and Motion for Summary Judgment, *Apple Inc.* v. *Iancu*, No. 5:20-cv-06128-EJD (N.D. Cal. Nov. 23, 2020), ECF No. 65.
Plaintiffs' Opposition to Defendants' Partial Motion to Stay Plaintiffs' Claims Regarding U.S. Pat. Nos. 9,814,268 and 10,492,542, *RAI Strategic Holdings, Inc.* v. *Altria Client Services LLC*, No. 1:20-cv-00393-LO-TCB (E.D. Va. Dec. 2, 2020), ECF No. 405.
Press Release, Altria, FDA Authorizes Sale of IQOS Tobacco Heating System in the U.S. (Apr. 30, 2019) ("Altria Announcement").
Public Interest Comments of Congressman George Holding in *Certain Tobacco Heating Articles and Components Thereof*, No. 337-TA-3447 (U.S.I.T.C. Apr. 15, 2020).
Public Interest Comments of Dr. Nikan H. Khatibi, MD in *Certain Tobacco Heating Articles and Components Thereof*, No. 337-TA-3447 (U.S.I.T.C. Apr. 23, 2020).
Public Interest Comments of Nextera Healthcare in *Certain Tobacco Heating Articles and Components Thereof*, No. 337-TA-3447 (U.S.I.T.C. Apr. 23, 2020).
Public Interest Comments of Spark MD in *Certain Tobacco Heating Articles and Components Thereof*, No. 337-TA-3447 (U.S.I.T.C. Apr. 23, 2020).
Public Interest Comments of TechFreedom in *Certain Tobacco Heating Articles and Components Thereof*, No. 337-TA-3447 (U.S.I.T.C. Apr. 23, 2020).
Public Interest Comments of the Consumer Advocates for Smoke-free Alternatives Association in *Certain Tobacco Heating Articles and Components Thereof*, No. 337-TA-3447 (U.S.I.T.C. Apr. 23, 2020).
Public Interest Comments of the Progressive Policy Institute in *Certain Tobacco Heating Articles and Components Thereof*, No. 337-TA-3447 (U.S.I.T.C. Apr. 23, 2020).
Public Interest Comments of the Reason Foundation in *Certain Tobacco Heating Articles and Components Thereof*, No. 337-TA-3447 (U.S.I.T.C. Apr. 23, 2020).
Public Interest Comments of the Schizophrenia and Related Disorder Alliance of America in *Certain Tobacco Heating Articles and Components Thereof*, No. 337-TA-3447 (U.S.I.T.C. Apr. 23, 2020).
Public Interest Comments of the Smoke-Free Alternatives Trade Association in *Certain Tobacco Heating Articles and Components Thereof*, No. 337-TA-3447 (U.S.I.T.C. Apr. 23, 2020).
Public Version of Commission Investigative Staff's Pre-Hearing Brief filed in United States International Trade Commission Investigation 337-TA-1199 in the matter of Certain Tobacco Heating Articles and Components Thereof on Jan. 4, 2021.
Public Version of Commission Investigative Staff's Responsive Post-Hearing Brief in International Trade Commission Investigation No. 337-TA-1199 in the matter of *Certain Tobacco Heating Articles and Components Thereof* on Mar. 5, 2021.
Public Version of Commission Opinion in International Trade Commission Investigation No. 337-TA-1199 in the matter of *Certain Tobacco Heating Articles and Components Thereof* on Oct. 19, 2021.
Public Version of Complainant's Opening Post-Hearing Brief in International Trade Commission Investigation No. 337-TA-1199 in the matter of *Certain Tobacco Heating Articles and Components Thereof* on Mar. 31, 2021.
Public Version of Complainant's Responsive Post-Hearing Brief in International Trade Commission Investigation No. 337-TA-1199 in the matter of *Certain Tobacco Heating Articles and Components Thereof* on Mar. 31, 2021.
Public Version of Complainants' Pre-Hearing Brief filed in United States International Trade Commission Investigation 337-TA-1199 in the matter of Certain Tobacco Heating Articles and Components Thereof on Dec. 11, 2020. (Parts 1 & 2).
Public Version of Initial Determination on Violation of Section 337 and Recommended Determination on Remedy and Bond in International Trade Commission Investigation No. 337-TA-1199 in the matter of *Certain Tobacco Heating Articles and Components Thereof* on May 14, 2021.
Public Version of Representative Claim Chart of Domestic Industry of Claims 1-4 in U.S. Pat. No. 9,930,915 by the Vuse Solo Device from ITC Inv. No. 337-TA-1199 Nov. 25, 2020.
Public Version of Respondent's Joint Disclosure of Final Contentions in Response to Individual Interrogatory No. 12, in *Certain Tobacco Heating Articles and Components Thereof*, No. 337-TA-1199 (Sep. 18, 2020).
Public Version of Respondents' Notice of Prior Art filed in United States International Trade Commission Investigation 337-TA-1199 in the matter of Certain Tobacco Heating Articles and Components Thereof on Aug. 13, 2020.
Public Version of Respondents' Notice of Prior Art filed in United States International Trade Commission Investigation 337-TA-1199 in the matter of Certain Tobacco Heating Articles and Components Thereof dated Aug. 13, 2020.
Public Version of Respondents' Petition and Contingent Petition for Review of the Final Initial Determination in United States International Trade Commission Investigation 337-TA-1199 in the matter of Certain Tobacco Heating Articles and Components Thereof dated May 28, 2021.
Public Version of Respondents' Post-Hearing Initial Brief filed in United States International Trade Commission Investigation 337-TA-1199 in the matter of Certain Tobacco Heating Articles and Components Thereof on Feb. 12, 2021.

RAI Exhibit 2009
Ecto World v. RAI Strategic
IPR2024-01280

(56) **References Cited**

OTHER PUBLICATIONS

Public Version of Respondents' Post-Hearing Responsive Brief filed in United States International Trade Commission Investigation 337-TA-1199 in the matter of Certain Tobacco Heating Articles and Components Thereof on Mar. 31, 2021.
Public Version of Respondents' Prehearing Brief filed in United States International Trade Commission Investigation 337-TA-1199 in the matter of Certain Tobacco Heating Articles and Components Thereof on Dec. 11, 2020.
R.J. Reynolds Tobacco Co., *Chemical and Biological Studies on New Cigarette Prototypes that Heat Instead of Burn Tobacco*, Reynolds Tobacco Company Monograh, 1988, pp. 60-62, pp. 119-124.
R.R. Baker, *Temperature Distribution Inside a Burning Cigarette*, Nature, vol. 247, pp. 405-406, (1974).
Rebuttal Expert Report of Charles Clemens in *Certain Tobacco Heating Articles and Components Thereof*, No. 337-TA-1199 (U.S. I.T.C. Oct. 23, 2020).
Record of Oral Hearing held Oct. 27, 2021, in IPR2020-01094, Inter Partes Review of U.S. Pat. No. 9,930,915, Nov. 24, 2021.
Remote Deposition of Seetharama C. Deevi, Ph.D. in Inter Partes Review of U.S. Pat. No. 9,930,915, dated Aug. 20, 2021.
Remote Deposition of Seetharama C. Deevi, Ph.D. in Inter Partes Review of U.S. Pat. No. 9,930,915, dated Mar. 26, 2021.
Reply Support of Defendants' Partial Motion to Stay Plaintiffs' Claims Regarding U.S. Pat. Nos. 9,814,268 and 10,492,542, *RAI Strategic Holdings, Inc.* v. *Altria Client Services LLC*, No. 1:20-cv-00393-LO-TCB (E.D. Va. Dec. 3, 2020), ECF No. 422.
Respondents' Opening Claim Construction Brief in *Certain Tobacco Heating Articles and Components Thereof*, No. 337-TA-1199 (U.S. I.T.C. Aug. 21, 2020).
Respondents' Responsive Claim Construction Brief in *Certain Tobacco Heating Articles and Components Thereof*, No. 337-TA-1199 (U.S.I.T.C. Sep. 4, 2020).
Richard R. Baker, *Smoke Generation Inside a Burning Cigarette: Modifying Combustion to Develop Cigarettes That May be Less Hazardous to Health*, Progress in Energy and Combustion Science, vol. 32, pp. 373-385, (2006).
Robert W. Messler, Jr., Joining of Materials and Structures, Elsevier Butterworth-Heinemann 2004—Excerpt, 4 pgs.
Rohsenow, "Heat, Mass, And Momentum Transfer", copyright 1961 Prentice-Hall, 3 pgs.
Rule 16(b) Scheduling Order, *RAI Strategic Holdings, Inc.* v. *Altria Client Services LLC*, No. 1:20-cv-00393-LO-TCB (E.D. Va. Sep. 8, 2020), ECF No. 99.
Samejima, T., et al., "Moisture Sorption Isotherms of Various Tobaccos", 1978, *Agric. Biol. Chem.*, vol. 42(12), pp. 2285-2290.
Sherz, Paul, Practical Electronics for Inventors, 2000, p. 107, p. 234.
Steven M. Kaplan, Wiley Electrical and Electronics Engineering Dictionary (2004), pp. 144-145.
Submission in Opposition Proceedings, filed in corresponding European Application No. 18173918.6, U.S. Pat. No. 3,398,460, dated Dec. 3, 2020.
Submission in opposition proceedings, Further Written Submissions filed in corresponding European Application No. 18173918.6, U.S. Pat. No. 3,398,460, dated Apr. 16, 2021.
Summary of Group #3 Brainstorming on May 13, 1994.
The American Heritage Dictionary of the English Language (5th ed. 2011), p. 1467.
The Lady Smokes, www.theladysmokes.com, webpages archived at https://web.archive.org/web/20061107040128/http://theladysmokes.com (Nov. 7, 2006), https://web.archive.org/web/20061107040116/http://www.theladysmokes.com/CigaretteHolders.html (Nov. 7, 2006), https://web.archive.org/web/20061107040116/http://www.theladysmokes.com/Bitchsticks.html (Nov. 7, 2006), and https://web.archive.org/web/20061107040116/http://www.theladysmokes.com/FAQs.html (Mar. 13, 2007).
Thermal Ink-Jet Print Cartridge Designer's Guide (2nd Edition Hewlett Packard) ("Jet Print Cartridge Designers Guide"), 12 pgs.
Third Party Observation filed in corresponding European Application No. 19151515.4, U.S. Pat. No. 3,508,076, dated Jan. 18, 2021.
Third Party Observation filed in corresponding European Application No. 19151515.4, U.S. Pat. No. 3,508,076, dated Mar. 12, 2020.
Transcript of Motion Hearing Proceedings (Via Zoom Conference) Before the Honorable Theresa C. Buchanan, United States District Court Magistrate Judge, *RAI Strategic Holdings, Inc.* v. *Altria Client Services LLC*, No. 1:20-cv-00393-LO-TCB (E.D. Va. Dec. 4, 2020).
Transcript Record of Oral Hearing held May 11, 2022 in Inter Partes Review of U.S. Pat. No. 9,814,268.
U.S. Appl. No. 60/722,036.
UK Approved Judgment In the High Court of Justice Business and Property Courts of England and Wales Intellectual Property List (ChD) Patents Court, dated Mar. 9, 2021, EWHC 537.
Unknown. Heater Development. Mar. 1994. Philip Morris Records; Master Settlement Agreement. Unknown. https://www.industrydocuments.ucsf.edu/docs/hxwy0118.
Unknown. Philip Morris Patent Database Search Invention Disclosures Dating From About 800000 to Present for Which Patent Applications Were Not Filed. Aug. 21, 1996. Philip Morris Records; Master Settlement Agreement. Unknown. https://www.industrydocuments.ucsf.edu/docs/kgdl0071.
Unknown. Project Beta Core Teams—Ashland. May 6, 1994. Philip Morris Records; Master Settlement Agreement. Unknown. https://www.industrydocuments.ucsf.edu/docs/szjn0076.
Videotaped Deposition of Charles E. Clemens, Conducted Virtually in United States International Trade Commission Investigation 337-TA-1199 in the matter of Certain Tobacco Heating Articles and Components Thereof on Nov. 5, 2020.
Waybackmachine Archive of Wikipedia page "Polycarbonate" 2006, Accessed from web.archive.org/web/20060913000000/https://en.wikipedia.org/wiki/Polycarbonate.
Webpages from Beijing SBT Ruyan Technology & Development Corp., Sbtry.cn (archived at web.archive.org, 2005-2006, with affidavit).
Webpages from E-cig.com (archived at web.archive.org, 2006-2007, with affidavit).
Wiley Electrical and Electronics Engineering Dictionary (2004), p. 181.
Written Opinion of the International Searching Authority in International Application No. PCT/US2007/081461, dated Apr. 18, 2009.
Yunus A. Cengel & Michael A. Boles, Thermodynamics: An Engineering Approach (5th ed. 2006) (excerpts) ("Thermodynamics"), 9 pgs.
Patent Owner Preliminary Response in post-grant review of U.S. Pat. No. 10,492,542 dated Oct. 16, 2020.
Petitioner's Reply to the Patent Owner Preliminary Response in post-grant review of U.S. Pat. No. 10,492,542 dated Nov. 10, 2020.
Patent Owner's Sur-Reply to Petitioner's Reply to Patent Owner's Preliminary Response in post-grant review of U.S. Pat. No. 10,492,542 dated Nov. 20, 2020.
Decision Granting Institution of Post-Grant Review in post-grant review of U.S. Pat. No. 10,492,542 dated Jan. 13, 2021.
Declaration of Charles E. Clemens in post-grant review of U.S. Pat. No. 10,492,542 dated Apr. 6, 2021.
Deposition of Dr. Seetharama C. Deevi taken by videoconference on Mar. 22, 2021 in post-grant review of U.S. Pat. No. 10,492,542.
Patent Owner Response to Petition for Post-Grant Review Pursuant to 37 C.F.R. § 42.220 in post-grant review of U.S. Pat. No. 10,492,542 dated Apr. 7, 2021.
Petitioner's Reply in post-grant review of U.S. Pat. No. 10,492,542 dated Jun. 30, 2021.
Videotaped Deposition of Dr. Seetharama C. Deevi, Ph.D. taken remotely via Zoom on Jul. 30, 2021 in post-grant review of U.S. Pat. No. 10,492,542.
Patent Owner Sur-Reply in post-grant review of U.S. Pat. No. 10,492,542 dated Aug. 11, 2021.
Judgment Final Written Decision Determining All Challenged Claims Unpatentable in post-grant review of U.S. Pat. No. 10,492,542 dated Jan. 10, 2022.
Patent Owner's Rehearing Request in post-grant review of U.S. Pat. No. 10,492,542 dated Feb. 9, 2022.

RAI Exhibit 2009
Ecto World v. RAI Strategic
IPR2024-01280

(56) **References Cited**

OTHER PUBLICATIONS

Decision Denying Patent Owner's Request for Rehearing in post-grant review of U.S. Pat. No. 10,492,542 dated Mar. 31, 2022.
File History regarding U.S. Pat. No. 10,492,542 ("'542 FH").
Patent Owner Preliminary Response in Inter Partes Review of U.S. Pat. No. 9,901,123, dated Aug. 17, 2020.
Petitioner's Reply to the Patent Owner Preliminary Response in Inter Partes Review of U.S. Pat. No. 9,901,123, dated Sep. 18, 2020.
Patent Owner's Sur-Reply to Petitioner's Reply to the Patent Owner's Preliminary Response in Inter Partes Review of U.S. Pat. No. 9,901,123, dated Sep. 29, 2020.
Decision Denying Institution of Inter Partes Review in Inter Partes Review of U.S. Pat. No. 9,901,123, dated Nov. 16, 2020.
Patent Owner's Demonstratives for Oral Argument: RAI's PTAB Presentation, *Philip Morris Products, S.A.* v. *RAI Strategic Holdings, Inc.*, IPR2020-01602, Exhibit 2017, Jan. 6, 2021.
Patent Owner Preliminary Response in Inter Partes Review of U.S. Pat. No. 9,901,123, dated Jan. 8, 2021.
Petitioner's Reply to the Patent Owner Preliminary Response in Inter Partes Review of U.S. Pat. No. 9,901,123, dated Feb. 9, 2021.
Decision Granting Institution of Inter Partes Review in Inter Partes Review of U.S. Pat. No. 9,901,123, dated Apr. 2, 2021.
Declaration of Charles E. Clemens in Inter Partes Review of U.S. Pat. No. 9,901,123, dated Jul. 1, 2021.
Patent Owner Response in Inter Partes Review of U.S. Pat. No. 9,901,123, dated Jul. 2, 2021.
Remote Videotaped Deposition of Stewart M. Fox on Jun. 25, 2021, in Inter Partes Review of U.S. Pat. No. 9,901,123.
Petitioner's Reply in Inter Partes Review of U.S. Pat. No. 9,901,123, dated Oct. 8, 2021.
Patent Owner Sur-Reply in Inter Partes Review of U.S. Pat. No. 9,901,123, dated Nov. 19, 2021.
Record of Oral Hearing held Jan. 6, 2022, in Inter Partes Review of U.S. Pat. No. 9,901,123, entered Mar. 1, 2022.
Petitioner's Request for Rehearing of the Institution Decision in Inter Partes Review of U.S. Pat. No. 9,901,123, dated Jul. 21, 2022.
File History for U.S. Pat. No. 9,930,915.
File History for U.S. Pat. No. 9,901,123.
Patent Owner's Notice of Appeal in IPR2020-01094, Inter Partes Review of U.S. Pat. No. 9,930,915, dated Apr. 28, 2022.
Petitioner's Notice of Appeal in IPR2020-01602, Inter Partes Review of U.S. Pat. No. 9,901,123, dated May 27, 2022.
Notification of Receipt of POP Request in IPR2020-00919, Inter Partes Review of U.S. Pat. No. 9,901,123, dated Jul. 21, 2022.
POP Request in IPR2020-00919, Inter Partes Review of U.S. Pat. No. 9,901,123, dated Jul. 21, 2022.
POP Request Dismissed in IPR2020-00919, Inter Partes Review of U.S. Pat. No. 9,901,123, dated Jul. 26, 2022.
Panel Change Order Conduct of the Proceeding in IPR2020-00919, Inter Partes Review of U.S. Pat. No. 9,901,123, Sep. 13, 2022.
Decision Denying Petitioner's Request on Rehearing of Decision Denying Institution in IPR2020-00919, Inter Partes Review of U.S. Pat. No. 9,901,123, dated Oct. 13, 2022.
"How the eCigarette Works," Screenshots YouTube Video by esmokeinpeace, https://www.youtube.com/watch?v=eqz6TvAKcBQ, Mar. 1, 2009 "E10".
"How the eCigarette Works," Wayback Machine Screenshots YouTube Video by esmokeinpeace, https://web.archive.org/web/20140227122005/https:/www.youtube.com/watch?v=eqz6TvAKcBQ, Mar. 1, 2009 "E10'".
"How To Use An Electronic Cigarette," Screenshots YouTube Video by Vapin Lizards, https://www.youtube.com/watch?v=xPJxBRxLIfs, Nov. 15, 2013 "E15".
Annex to Notice of Opposition filed in corresponding European Patent Application No. 20156199.0, U.S. Pat. No. 3,669,682, dated Mar. 3, 2023, "Feature Analysis of Claim 1".
Notice of Opposition filed in corresponding European Patent Application No. 20156199.0, U.S. Pat. No. 3,669,682, dated Mar. 3, 2023.
Notice of Opposition filed in corresponding European Patent Application No. 20156199.0, U.S. Pat. No. 3,669,682, dated Mar. 8, 2023. (37 pgs).
Vape Ranks, "E-Cigarette Inventor Complains about Lack of Financial Rewards," Posted Oct. 14, 2013, Retrieved Feb. 20, 2023, "Hon Lik Article".
Notice of Opposition filed in corresponding European Patent Application No. 20156199.0, U.S. Pat. No. 3,669,682, dated Mar. 8, 2023. (47 pgs).
Letter Accompanying Notice of Opposition filed in corresponding European Patent Application No. 20156199.0, U.S. Pat. No. 3,669,682, dated Feb. 20, 2023.

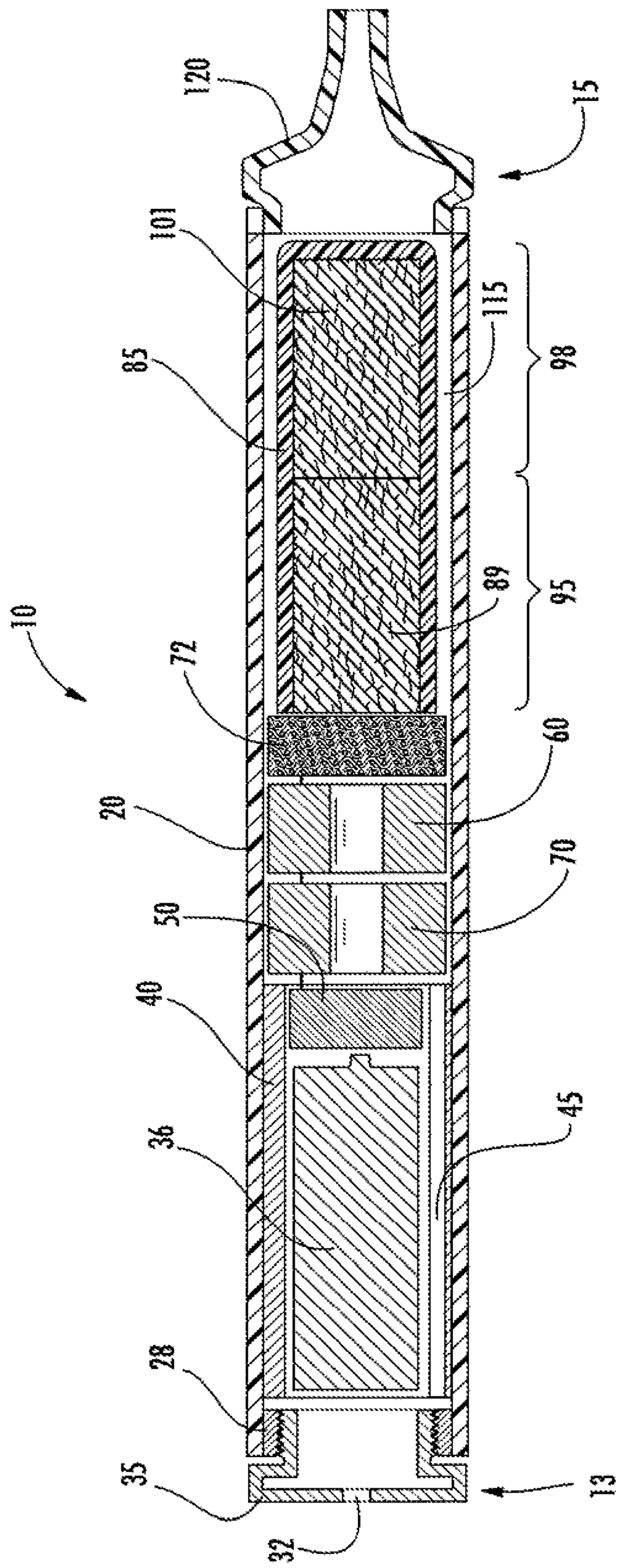

FIG. 1

RAI Exhibit 2009
Ecto World v. RAI Strategic
IPR2024-01280

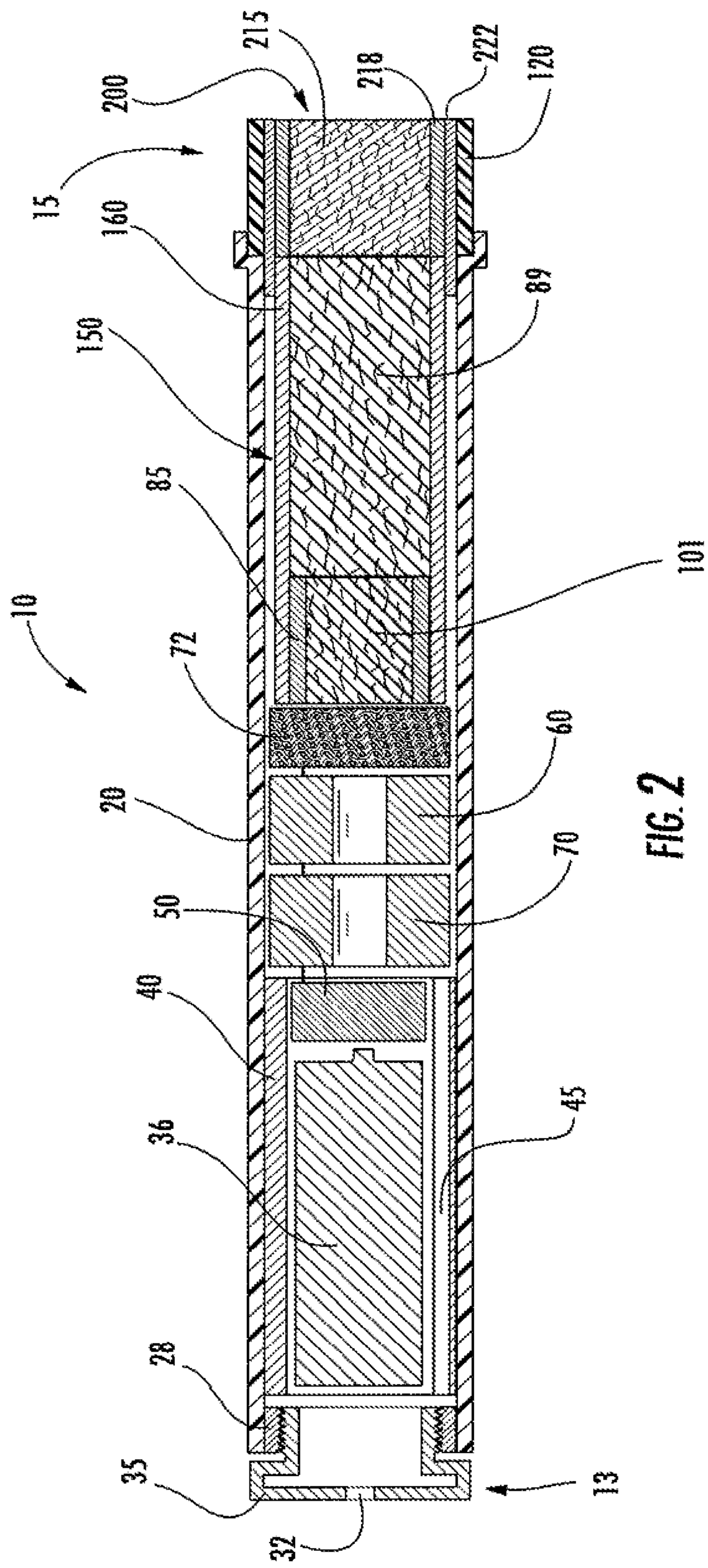

FIG. 2

RAI Exhibit 2009
Ecto World v. RAI Strategic
IPR2024-01280

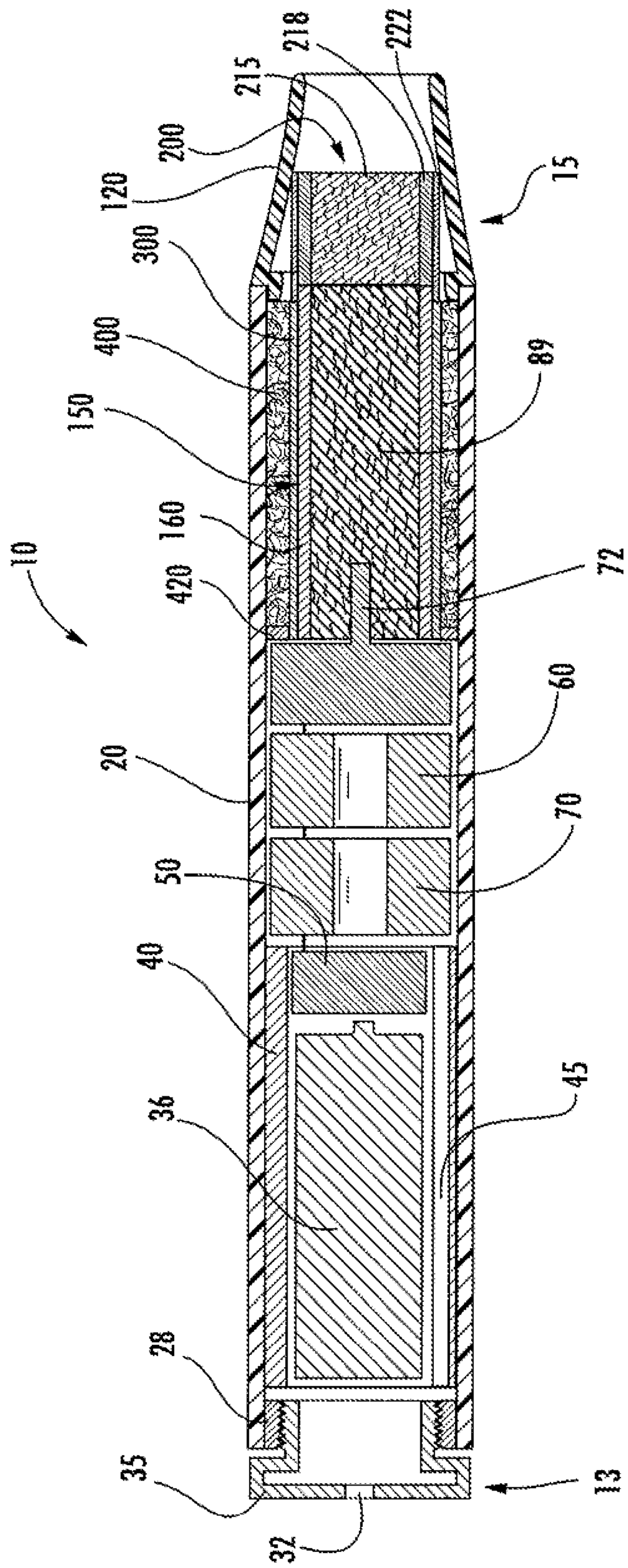

FIG. 3

RAI Exhibit 2009
Ecto World v. RAI Strategic
IPR2024-01280

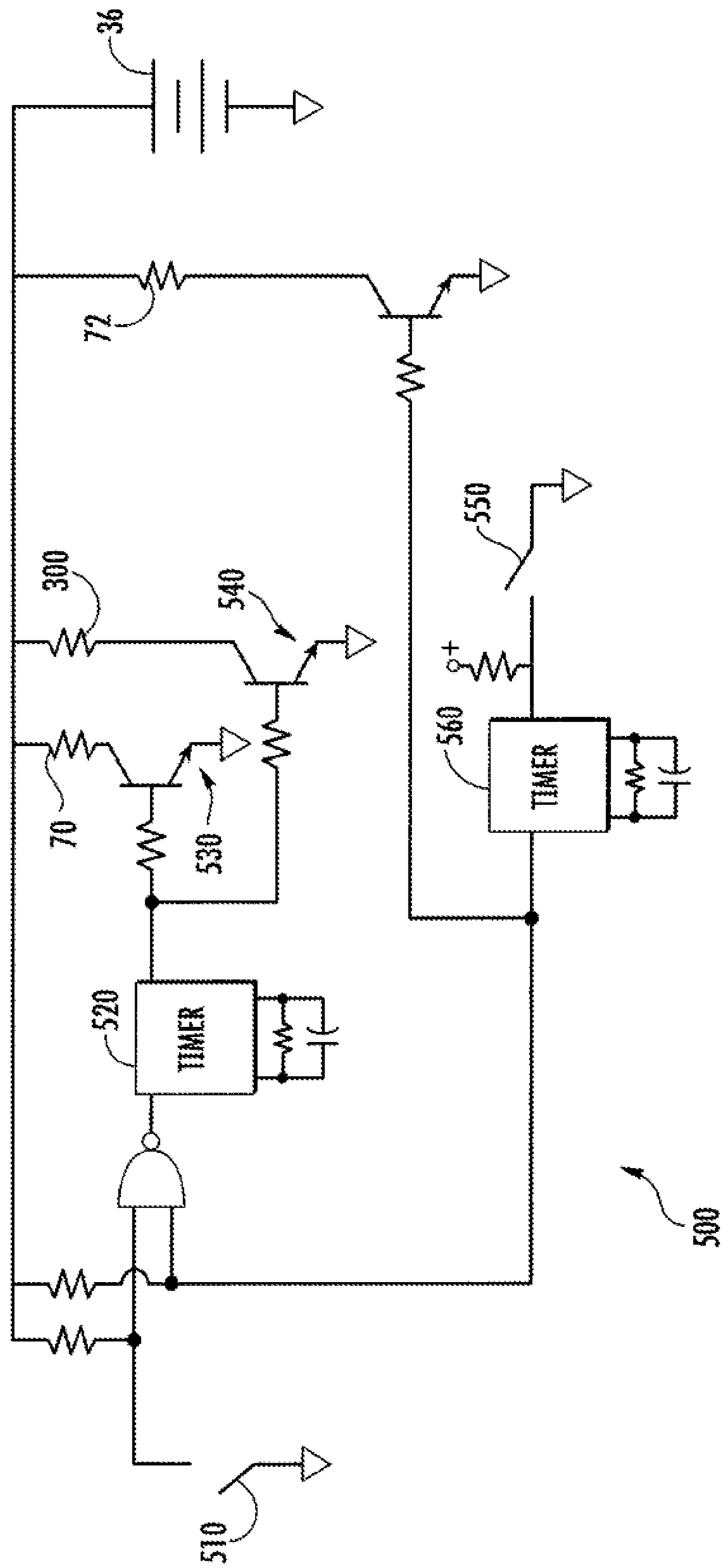

FIG. 4

RAI Exhibit 2009
Ecto World v. RAI Strategic
IPR2024-01280

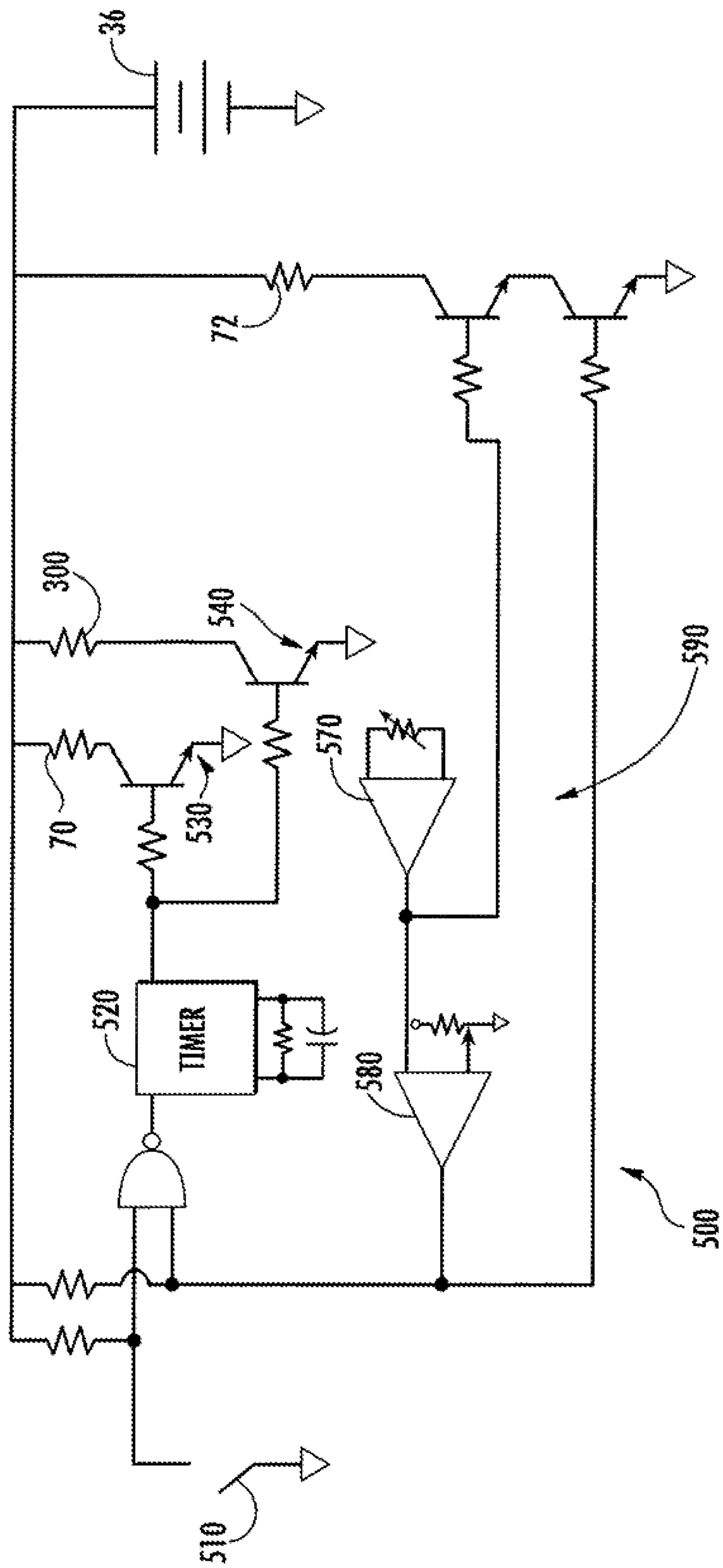

FIG. 5

RAI Exhibit 2009
Ecto World v. RAI Strategic
IPR2024-01280

TOBACCO-CONTAINING SMOKING ARTICLE

CROSS-REFERENCE TO RELATED APPLICATIONS

This application is a continuation of U.S. application Ser. No. 17/673,424; filed Feb. 16, 2022, which is a continuation of U.S. application Ser. No. 16/271,443; filed Feb. 8, 2019, which is a continuation of U.S. application Ser. No. 15/879,268; filed Jan. 24, 2018, issued on Mar. 19, 2019, as U.S. Pat. No. 10,231,488, which is a continuation of U.S. application Ser. No. 15/286,087; filed Oct. 5, 2016, issued on Feb. 27, 2018, as U.S. Pat. No. 9,901,123, which is a continuation of U.S. application Ser. No. 14/527,287; filed Oct. 29, 2014, issued on Oct. 31, 2017, as U.S. Pat. No. 9,801,416, which is a continuation of U.S. application Ser. No. 13/297,983, filed Nov. 16, 2011, issued on Dec. 2, 2014, as U.S. Pat. No. 8,899,238, which is a continuation of U.S. application Ser. No. 12/763,890, filed Apr. 20, 2010 and issued on Dec. 20, 2011 as U.S. Pat. No. 8,079,371, which is a continuation of U.S. application Ser. No. 11/550,634, filed on Oct. 18, 2006 and issued on Jun. 1, 2010 as U.S. Pat. No. 7,726,320, which are each incorporated by reference herein in their entirety.

FIELD OF THE INVENTION

The present invention relates to tobacco products, such as tobacco-containing smoking articles.

BACKGROUND OF THE INVENTION

Popular smoking articles, such as cigarettes, have a substantially cylindrical rod shaped structure and include a charge, roll, or column of smokable material, such as shredded tobacco (e.g., in cut filler form), surrounded by a paper wrapper, thereby forming a so-called "smokable rod" or "tobacco rod." Normally, a cigarette has a cylindrical filter element aligned in an end-to-end relationship with the tobacco rod. Preferably, a filter element comprises plasticized cellulose acetate tow circumscribed by a paper material known as "plug wrap." Certain filter elements can incorporate polyhydric alcohols. See, for example, UK Pat. Spec. 755,475. Certain cigarettes incorporate a filter element having multiple segments, and one of those segments can comprise activated charcoal particles. See, for example, U.S. Pat. No. 5,360,023 to Blakley et al. and U.S. Pat. No. 6,537,186 to Veluz. Preferably, the filter element is attached to one end of the tobacco rod using a circumscribing wrapping material known as "tipping paper." It also has become desirable to perforate the tipping material and plug wrap, in order to provide dilution of drawn mainstream smoke with ambient air. Descriptions of cigarettes and the various components thereof are set forth in *Tobacco Production, Chemistry and Technology*, Davis et al. (Eds.) (1999). Traditionally, a cigarette of the most popular type is employed by a smoker by lighting one end thereof and burning the tobacco rod. The smoker then receives mainstream smoke produced by the burning tobacco into his/her mouth by drawing on the opposite end (e.g., the filter end) of the cigarette.

Through the years, various methods for altering the composition of mainstream tobacco smoke have been proposed. In PCT Appl. Pub. No. WO 02/37990 to Bereman, it has been suggested that metallic particles and/or carbonaceous particles can be incorporated into the smokable material of a cigarette in an attempt to reduce the amounts of certain

compounds in the smoke produced by that cigarette. In US Patent Appl. Pub. No. 2005/0066986 to Nestor et al., it has been suggested that a smokable rod possessing tobacco wrapped in paper can incorporate tobacco filler combined with an aerosol-forming material, such as glycerin. U.S. Pat. No. 6,874,508 to Shafer et al. proposes a cigarette having a paper wrapped tobacco rod having a tip portion that is treated with an additive, such as potassium bicarbonate, sodium chloride or potassium phosphate.

Various tobacco substitute materials have been proposed, and substantial listings of various types of those materials can be found in U.S. Pat. No. 4,079,742 to Rainer et al. and U.S. Pat. No. 4,771,795 to White et al. Certain cigarette-type products that employ non-tobacco materials (e.g., dried vegetable leaves, such as lettuce leaves) as filler that is burned to produce smoke that resembles tobacco smoke have been marketed under the trade names "Cubebs," "Triumph," "Jazz," and "Bravo." See, for example, the types of materials described in U.S. Pat. No. 4,700,727 to Torigian. Furthermore, tobacco substitute materials having the trade names "Cytrel" and "NSM" were introduced in Europe during the 1970s. Representative types of proposed synthetic tobacco substitute materials, smokable materials incorporating tobacco and other components, and cigarettes incorporating those materials, are described in British Pat. No. 1,431,045; and U.S. Pat. No. 3,738,374 to Bennett; U.S. Pat. No. 3,844,294 to Webster; U.S. Pat. No. 3,878,850 to Gibson et al.; U.S. Pat. No. 3,931,824 to Miano et al.; U.S. Pat. No. 3,943,941 to Boyd et al.; U.S. Pat. No. 4,044,777 to Boyd et al.; U.S. Pat. No. 4,233,993 to Miano et al.; U.S. Pat. No. 4,286,604 to Ehretsmann et al.; U.S. Pat. No. 4,326,544 to Hardwick et al.; U.S. Pat. No. 4,920,990 to Lawrence et al.; U.S. Pat. No. 5,046,514 to Bolt; U.S. Pat. No. 5,074,321 to Gentry et al.; U.S. Pat. No. 5,092,353 to Montoya et al.; 5,778,899 to Saito et al.; U.S. Pat. No. 6,397,852 to McAdam; and U.S. Pat. No. 6,408,856 to McAdam. Furthermore, various types of highly processed smokable materials incorporating tobacco and other ingredients are set forth in U.S. Pat. No. 4,823,817 to Luke; U.S. Pat. No. 4,874,000 to Tamol et al.; U.S. Pat. No. 4,977,908 to Luke; U.S. Pat. No. 5,072,744 to Luke et al.; U.S. Pat. No. 5,829,453 to White et al.; and U.S. Pat. No. 6,182,670 to White et al.

Certain types of coaxial or concentric-type smoking articles have been proposed. There have been proposed cigarette-type smoking articles including tobacco smokable materials surrounding longitudinally extending cores of other materials. UK Pat. Appl. 2,070,409 proposes a smoking article having a rod of smoking material having at least one filament extending over at least a major portion of the length of the rod. U.S. Pat. No. 3,614,956 to Thornton proposes a smoking article having an annular outer portion made of tobacco smoking material and a central cylindrical core of absorbent material. U.S. Pat. No. 4,219,031 to Rainer et al. proposes a smoking article having a central core of carbonized fibers circumscribed by tobacco. U.S. Pat. No. 6,823,873 to Nichols et al. proposes a cigarette including an ignition element surrounded by tobacco, which is in turn surrounded by a composite outer wrapper. One type of cigarette-type smoking article has included a rod of tobacco smokable material surrounded a longitudinally extending annulus of some other material. For example, U.S. Pat. No. 5,105,838 to White et al. proposes a rod of smokable material, normally circumscribed by a layer of wrapping material, which is in turn circumscribed by an insulating material (e.g., glass filaments or fibers). PCT Appl. Pub. No. WO 98/16125 to Snaidr et al. proposes a smoking device

RAI Exhibit 2009
Ecto World v. RAI Strategic
IPR2024-01280

constructed from a very thin cigarette designed to fit into a tubular ceramic cartridge. Numerous references have proposed various smoking articles of a type that generate flavored vapor, visible aerosol, or a mixture of flavored vapor and visible aerosol. Some of those proposed types of smoking articles include tubular sections or longitudinally extending air passageways. See, for example, those types of smoking articles described in U.S. Pat. No. 3,258,015 to Ellis et al.; U.S. Pat. No. 3,356,094 to Ellis et al.; U.S. Pat. No. 3,516,417 to Moses; U.S. Pat. No. 4,347,855 to Lanzellotti et al.; U.S. Pat. No. 4,340,072 to Bolt et al.; U.S. Pat. No. 4,391,285 to Burnett et al.; U.S. Pat. No. 4,917,121 to Riehl et al.; U.S. Pat. No. 4,924,886 to Litzinger; and U.S. Pat. No. 5,060,676 to Hearn et al. Many of those types of smoking articles have employed a combustible fuel source that is burned to provide an aerosol and/or to heat an aerosol-forming material. See, for example, the background art cited in U.S. Pat. No. 4,714,082 to Banerjee et al. and U.S. Pat. No. 4,771,795 to White et al.; which are incorporated herein by reference. See, also, for example, those types of smoking articles described in U.S. Pat. No. 4,756,318 to Clearman et al.; U.S. Pat. No. 4,714,082 to Banerjee et al.; U.S. Pat. No. 4,771,795 to White et al.; U.S. Pat. No. 4,793,365 to Sensabaugh et al.; U.S. Pat. No. 4,917,128 to Clearman et al.; U.S. Pat. No. 4,961,438 to Korte; U.S. Pat. No. 4,966,171 to Serrano et al.; U.S. Pat. No. 4,969,476 to Bale et al.; U.S. Pat. No. 4,991,606 to Serrano et al.; U.S. Pat. No. 5,020,548 to Farrier et al.; U.S. Pat. No. 5,033,483 to Clearman et al.; U.S. Pat. No. 5,040,551 to Schlatter et al.; U.S. Pat. No. 5,050,621 to Creighton et al.; U.S. Pat. No. 5,065,776 to Lawson; U.S. Pat. No. 5,076,296 to Nystrom et al.; U.S. Pat. No. 5,076,297 to Farrier et al.; U.S. Pat. No. 5,099,861 to Clearman et al.; U.S. Pat. No. 5,105,835 to Drewett et al.; U.S. Pat. No. 5,105,837 to Barnes et al.; U.S. Pat. No. 5,115,820 to Hauser et al.; U.S. Pat. No. 5,148,821 to Best et al.; U.S. Pat. No. 5,159,940 to Hayward et al.; U.S. Pat. No. 5,178,167 to Riggs et al.; U.S. Pat. No. 5,183,062 to Clearman et al.; U.S. Pat. No. 5,211,684 to Shannon et al.; U.S. Pat. No. 5,240,014 to Deevi et al.; U.S. Pat. No. 5,240,016 to Nichols et al.; U.S. Pat. No. 5,345,955 to Clearman et al.; U.S. Pat. No. 5,551,451 to Riggs et al.; U.S. Pat. No. 5,595,577 to Bensalem et al.; U.S. Pat. No. 5,819,751 to Barnes et al.; U.S. Pat. No. 6,089,857 to Matsuura et al.; U.S. Pat. No. 6,095,152 to Beven et al; 6,578,584 Beven; and U.S. Pat. No. 6,730,832 to Dominguez; which are incorporated herein by reference. Furthermore, certain types of cigarettes that employ carbonaceous fuel elements have been commercially marketed under the brand names "Premier" and "Eclipse" by R. J. Reynolds Tobacco Company. See, for example, those types of cigarettes described in *Chemical and Biological Studies on New Cigarette Prototypes that Heat Instead of Burn Tobacco*, R. J. Reynolds Tobacco Company Monograph (1988) and *Inhalation Toxicology,* 12:5, p. 1-58 (2000).

Certain proposed cigarette-shaped tobacco products purportedly employ tobacco in a form that is not intended to be burned. See, for example, U.S. Pat. No. 4,836,225 to Sudoh; U.S. Pat. No. 4,972,855 to Kuriyama et al.; and U.S. Pat. No. 5,293,883 to Edwards; which are incorporated herein by reference. Yet other types of smoking articles, such as those types of smoking articles that generate flavored vapors by subjecting tobacco or processed tobaccos to heat produced from chemical or electrical heat sources, are described in U.S. Pat. No. 4,848,374 to Chard et al.; U.S. Pat. No. 4,947,874 to Brooks et al.; U.S. Pat. No. 5,060,671 to Counts et al.; U.S. Pat. No. 5,146,934 to Deevi et al.; U.S. Pat. No. 5,224,498 to Deevi; U.S. Pat. No. 5,285,798 to Banerjee et al.; U.S. Pat. No. 5,357,984 to Farrier et al.; U.S. Pat. No. 5,593,792 to Farrier et al.; U.S. Pat. No. 5,369,723 to Counts; U.S. Pat. No. 5,692,525 to Counts et al.; U.S. Pat. No. 5,865,185 to Collins et al.; U.S. Pat. No. 5,878,752 to Adams et al.; U.S. Pat. No. 5,880,439 to Deevi et al.; U.S. Pat. No. 5,915,387 to Baggett et al.; U.S. Pat. No. 5,934,289 to Watkins et al.; U.S. Pat. No. 6,033,623 to Deevi et al.; U.S. Pat. No. 6,053,176 to Adams et al.; U.S. Pat. No. 6,164,287 to White; U.S. Pat. No. 6,289,898 to Fournier et al.; U.S. Pat. No. 6,615,840 to Fournier et al.; and U.S. Patent Appl. Pub. Nos. 2003/0131859 to Li et al.; 2005/0016549 to Banerjee et al.; and 2006/0185687 to Hearn et al.; each of which is incorporated herein by reference. One type of smoking article that has employed electrical energy to produce heat has been commercially marketed by Philip Morris Inc. under the brand name "Accord."

Certain attempts have been made to deliver vapors, sprays or aerosols, such as those possessing or incorporating flavors and/or nicotine. See, for example, the types of devices set forth in U.S. Pat. No. 4,190,046 to Virag; U.S. Pat. No. 4,284,089 to Ray; U.S. Pat. No. 4,635,651 to Jacobs; U.S. Pat. No. 4,735,217 to Gerth et al.; U.S. Pat. No. 4,800,903 to Ray et al.; U.S. Pat. No. 5,388,574 to Ingebrethsen et al.; U.S. Pat. No. 5,799,663 to Gross et al.; U.S. Pat. No. 6,532,965 to Abhulimen et al.; and U.S. Pat. No. 6,598,607 to Adiga et al; and EP 1,618,803 to Hon; which are incorporated herein by reference. See also, U.S. Pat. No. 7,117,867 to Cox et al. and the devices set forth on the website, www.e-cig.com, which are incorporated herein by reference.

Smoking articles that employ tobacco substitute materials and smoking articles that employ sources of heat other than burning tobacco cut filler to produce tobacco-flavored vapors or tobacco-flavored visible aerosols have not received widespread commercial success. Thus, it would be highly desirable to provide a smoking article that provides a smoker with an ability to enjoy using tobacco without the necessity of burning any significant amount of tobacco. In particular, it would be highly desirable to provide a tobacco-containing smoking article, such as an article having the general appearance of a cigarette, cigar, or pipe, that possesses the ability to provide to a smoker many of the benefits and advantages of conventional tobacco smoking without necessarily delivering considerable quantities of incomplete combustion and pyrolysis products.

SUMMARY OF THE INVENTION

The present invention relates to smoking articles for providing tobacco enjoyment, as well as manners and methods for providing tobacco enjoyment using such smoking articles. That is, the present invention relates to articles that produce aerosols incorporating components derived from, or provided by, tobacco. Preferred articles produce aerosols that are not necessarily produced as a result of burning of tobacco, but rather, produce an aerosol incorporating components derived from, or provided by, tobacco as a result of the application of heat upon tobacco or materials that are in contact with tobacco. Preferred articles produce visible aerosols that are "smoke-like" in nature, and exhibit many of the sensory characteristics associated with those types of smoking articles that burn tobacco. As a result, the present invention relates to tobacco smoking articles that produce aerosols without experiencing any necessary burning of tobacco or other component materials during periods in which the articles are used. Thus, the present invention relates to smoking articles, and in particular, to smoking articles that incorporates tobacco in some form. Of particular

RAI Exhibit 2009
Ecto World v. RAI Strategic
IPR2024-01280

interest is generally rod-shaped smoking articles (e.g., a cigarette, a cigarillo, or a cigar), or smoking articles having shapes comparable to other traditional types of smoking products (e.g., pipes).

A preferred smoking article of the present invention, when smoked, is capable of providing mainstream aerosol that may be characterized as being flavorful and satisfying. Highly preferred cigarettes provide certain of the flavors, sensations and satisfaction of popular cigarettes that burn tobacco cut filler, because those preferred cigarettes generate mainstream aerosol, at least in part, by the action of heat upon some form of tobacco.

In one embodiment, the present invention relates to a cigarette that is smoked by coupling that cigarette to an electrically powered aerosol generating device that acts as a holder for that cigarette. The cigarette possesses at least one form of tobacco, and that tobacco is wrapped in a paper wrapper. If desired, various forms of tobacco, or various forms of tobacco containing compositions, can be positioned at specific locations within the cigarette. The cigarette also incorporates aerosol-forming material, and that aerosol-forming material can be an ingredient that is employed in addition to the tobacco. The cigarette may also possess a mouth-end piece that is used by the smoker to inhale components of tobacco, components derived from tobacco, and other components, preferably in the form of a visible aerosol, generated at least in part by the action of heat upon components of that cigarette. A representative device possesses a source of electrical power (e.g., a battery), a controller mechanism including a sensor that is capable of selectively powering certain components of the device (e.g., electrical resistance heating elements) at least during periods of draw, and at least one heating device (e.g., an electrical resistance heating unit) for forming a thermally generated aerosol that incorporates components of tobacco. During use, the cigarette is positioned within the outer housing of the smoking article, and after use, the used cigarette is removed from the smoking article. When desired, another cigarette is positioned within the device for further use.

In another embodiment, the present invention relates to a smoking article that is smoked by incorporating that tobacco within an electrically-powered, aerosol-generating device. At least one form of tobacco can be positioned at one or more specific locations within the cigarette. Aerosol-forming material is employed in addition to the tobacco. A mouth-end piece is used by the smoker to inhale components of tobacco that are generated by the action of heat upon components of that smoking article. A representative smoking article possesses a source of electrical power (e.g., a battery), a controller mechanism including a sensor that is capable of selectively powering certain components of the device (e.g., electrical resistance heating elements) at least during periods of draw, and at least one heating device (e.g., an electrical resistance heating unit) for forming a thermally generated aerosol that incorporates components of tobacco. During use, a cartridge containing some form of tobacco is positioned within the smoking article, and after use, the used cartridge is removed from the outer housing of the device. When desired, another cartridge is positioned within the device for further use.

In one preferred embodiment, a tobacco-containing, electrically-powered smoking article is provided, the smoking article comprising:

(a) an outer housing having a mouth-end and an end distal to the mouth-end, wherein the mouth-end comprises an opening adapted for egress of an aerosol generated within the smoking article and the distal end comprises an opening adapted for intake of air into the smoking article;

(b) an electrical power source within the outer housing and operatively positioned downstream of the opening in the distal end of the outer housing such that air entering the smoking article passes the electrical power source;

(c) a first electrical resistance heating element within the outer housing, powered by said electrical power source, and operatively positioned for heating air drawn through the opening in the distal end of the outer housing;

(d) a tobacco material positioned within the outer housing;

(e) an aerosol-forming material positioned within the outer housing in fluid communication with said tobacco material such that air can be drawn through both the tobacco material and the aerosol-forming material;

(f) a second electrical resistance heating element within the outer housing, powered by said electrical power source, and operatively positioned for heating the aerosol-forming material and tobacco material; and

(g) a puff-actuated controller adapted for regulating current flow through at least one of said first and second electrical resistance heating elements during draw, the controller comprising a sensor adapted for sensing draw by the user on the smoking article.

The aerosol-forming material and tobacco can be positioned within a cartridge within the outer housing, the cartridge having an opening facing the second electrical resistance heating element such that aerosol generated within the cartridge initially flows in the direction of the second electrical resistance heating element. The cartridge containing the tobacco material and the aerosol-forming material can be positioned between the second resistance heating element and the mouth-end of the outer housing, and the aerosol generated in the cartridge would initially flow in the direction of the second electrical resistance heating element and then flow towards the mouth-end of the outer housing.

In one further embodiment, the tobacco material is in the form of a tobacco rod circumscribed by a wrapping material and positioned between the second resistance heating element and the mouth-end of the outer housing. A cartridge comprising an aerosol-generating material circumscribed by a wrapping material can be positioned between the tobacco rod and the second resistance heating element. Preferably, a filter element is attached to the end of the tobacco rod closest to the mouth-end of the outer housing.

The smoking article can further include, in certain embodiments, a third resistance heating element within the outer housing, powered by the electrical power source, and operatively positioned to heat the tobacco rod. The third heating element can be, for example, a tubular heating element circumscribing all or a portion of the tobacco rod. When a third heating element is present, current through this heating element can also be selectively controlled and regulated by the puff-actuated controller.

In yet another preferred embodiment, a tobacco-containing, electrically-powered smoking article is provided which comprises:

(a) an outer housing having a mouth-end and an end distal to the mouth-end, wherein the mouth-end comprises an opening adapted for egress of an aerosol generated

RAI Exhibit 2009
Ecto World v. RAI Strategic
IPR2024-01280

within the smoking article and the distal end comprises an opening adapted for intake of air into the smoking article;

(b) an electrical power source within the outer housing and operatively positioned downstream of the opening in the distal end of the outer housing such that air entering the smoking article passes the electrical power source;

(c) a first electrical resistance heating element within the outer housing, powered by said electrical power source, and operatively positioned for heating air drawn through the opening in the distal end of the outer housing;

(d) a cigarette rod (which is preferably removable so that the rod can be replaced within the smoking article) within the outer housing and comprising a tobacco rod circumscribed by a wrapping paper and an adjacent filter element, the cigarette rod being positioned downstream of the second resistance heating element;

(e) an aerosol-forming material positioned within the outer housing in fluid communication with said cigarette rod such that air can be drawn through both the cigarette rod and the aerosol-forming material;

(f) a second electrical resistance heating element within the outer housing, powered by said electrical power source, and operatively positioned for heating the aerosol-forming material and the tobacco rod; and

(g) a puff-actuated controller adapted for regulating current flow through at least one of said first and second electrical resistance heating elements during draw, the controller comprising a sensor adapted for sensing draw by the user on the smoking article.

The aerosol-generating material may be in intimate contact with the tobacco in the tobacco rod, or the smoking article may further include a cartridge comprising the aerosol-generating material circumscribed by a wrapping material, the cartridge positioned between the tobacco rod and the second resistance heating element. In this embodiment also, the device may further include a third resistance heating element within the outer housing, powered by said electrical power source, and operatively positioned to heat the tobacco rod.

In a still further embodiment, the invention provides a tobacco-containing, electrically-powered smoking article comprising:

(a) an outer housing having a mouth-end and an end distal to the mouth-end, wherein the mouth-end comprises an opening adapted for egress of an aerosol generated within the smoking article and the distal end comprises an opening adapted for intake of air into the smoking article;

(b) a mouthpiece through which air can be drawn from the mouth-end of the outer housing, the mouthpiece being removably attached to the outer housing;

(c) an electrical power source within the outer housing and operatively positioned downstream of the opening in the distal end of the outer housing such that air entering the smoking article passes the electrical power source;

(d) a first electrical resistance heating element within the outer housing, powered by said electrical power source, and operatively positioned for heating air drawn through the opening in the distal end of the outer housing;

(e) a removable carrier device within the outer housing comprising a tobacco material and an aerosol-forming material in fluid communication with the tobacco material such that air can be drawn through both the tobacco material and the aerosol-forming material;

(f) a second electrical resistance heating element within the outer housing, powered by said electrical power source, and operatively positioned for heating the aerosol-forming material and the tobacco material; and

(g) a puff-actuated controller adapted for regulating current flow through at least one of said first and second electrical resistance heating elements during draw, the controller comprising a sensor adapted for sensing draw by the user on the smoking article.

An exemplary removable carrier device is a cigarette rod as described above, the cigarette comprising a tobacco rod circumscribed by a wrapping paper and an adjacent filter element, the cigarette rod being positioned between the second resistance heating element and the removable mouthpiece. Another example of a removable carrier device is a removable cartridge enclosing the aerosol-forming material and tobacco material as described above, the cartridge having an opening facing the second electrical resistance heating element such that aerosol generated within the cartridge initially flows in the direction of the second electrical resistance heating element. The removable carrier device can be heated by a third resistance heating element within the outer housing, the third heating element being powered by the electrical power source.

In any of the above embodiments, at least a portion of the tobacco in the tobacco rod can be in the form of tobacco cut filler, and the cut filler can be in intimate contact with the aerosol-forming material. In certain embodiments, at least a portion of the tobacco in the tobacco rod is in the form of an extract. In any embodiment, at least a portion of the tobacco in the tobacco rod and the aerosol-forming material can be in the form of an intimate mixture, or the two components can be separately-located within the smoking article, such as in separate, adjacent regions in the cigarette rod or in a cartridge. Exemplary aerosol-forming materials include glycerin, propylene glycol, and mixtures thereof.

BRIEF DESCRIPTION OF THE DRAWINGS

In order to assist the understanding of embodiments of the invention, reference will now be made to the appended drawings, which are not necessarily drawn to scale. The drawings are exemplary only, and should not be construed as limiting the invention.

FIG. **1** through FIG. **3** depict longitudinal cross-sectional views of various embodiments of an electrically powered, tobacco-containing smoking article; and

FIG. **4** and FIG. **5** each are representative schematic diagrams of electronic circuits for smoking articles.

DETAILED DESCRIPTION OF THE PREFERRED EMBODIMENTS

The present inventions now will be described more fully hereinafter with reference to the accompanying drawings. The invention may be embodied in many different forms and should not be construed as limited to the embodiments set forth herein; rather, these embodiments are provided so that this disclosure will satisfy applicable legal requirements. Like numbers refer to like elements throughout. As used in this specification and the claims, the singular forms "a," "an," and "the" include plural referents unless the context clearly dictates otherwise.

A smoking article of the present invention incorporates tobacco. The type of tobacco can vary. One type of tobacco

RAI Exhibit 2009
Ecto World v. RAI Strategic
IPR2024-01280

can be employed, or combinations or blends of various types of tobacco can be employed. Furthermore, different types of tobaccos, or different blends of tobaccos, can be employed at different locations within the smoking article.

The tobacco that is employed can include, or can be derived from, tobaccos such as flue-cured tobacco, burley tobacco, Oriental tobacco, Maryland tobacco, dark tobacco, dark-fired tobacco and *Rustica* tobacco, as well as other rare or specialty tobaccos, or blends thereof. See, also, for example, the types of tobaccos set forth in U.S. Pat. No. 6,730,832 to Dominguez et al.; and U.S. Pat. No. 7,025,066 to Lawson et al.; and U.S. Pat. Appl. Ser. No. 60/818,198, filed Jun. 30, 2006, to Stebbins et al.; each of which is incorporated herein by reference. Descriptions of various types of tobaccos, growing practices, harvesting practices and curing practices are set for in *Tobacco Production, Chemistry and Technology*, Davis et al. (Eds.) (1999). Most preferably, the tobacco that is employed has been appropriately cured and aged. Especially preferred techniques and conditions for curing flue-cured tobacco are set forth in Nestor et al., Beitrage Tabakforsch. Int., 20 (2003) 467-475 and U.S. Pat. No. 6,895,974 to Peele, which are incorporated herein by reference. Representative techniques and conditions for air curing tobacco are set forth in Roton et al., Beitrage Tabakforsch. Int., 21 (2005) 305-320 and Staaf et al., Beitrage Tabakforsch. Int., 21 (2005) 321-330, which are incorporated herein by reference.

The tobacco that is incorporated within the smoking article can be employed in various forms; and combinations of various forms of tobacco can be employed, or different forms of tobacco can be employed at different locations within the smoking article. For example, the tobacco can be employed in the form of cut or shredded pieces of lamina or stem; in a processed form (e.g., reconstituted tobacco sheet, such as pieces of reconstituted tobacco sheet shredded into a cut filer form; films incorporating tobacco components; extruded tobacco parts or pieces; expanded tobacco lamina, such as cut filler that has been volume expanded; pieces of processed tobacco stems comparable to cut filler in size and general appearance; granulated tobacco; foamed tobacco materials; compressed or pelletized tobacco; or the like); as pieces of finely divided tobacco (e.g., tobacco dust, tobacco powder, agglomerated tobacco powders, or the like); or in the form of a tobacco extract. See, for example, U.S. patent application Ser. No. 11/194,215 filed Aug. 1, 2005, to Cantrell et al. and Ser. No. 11/377,630 filed Mar. 16, 2006 to Crooks et al.; which are incorporated herein by reference.

The smoking article can employ tobacco in the form of lamina and/or stem. As such, the tobacco can be used in forms, and in manners, that are virtually identical in many regards to those traditionally used for the manufacture of tobacco products, such as cigarettes. Traditionally, cut or shredded pieces of tobacco lamina and stem have been employed as so-called "cut filler" for cigarette manufacture. Pieces of water extracted stems also can be employed. As such, the tobacco in such a form introduces mass and bulk within the smoking article. Manners and methods for curing, de-stemming, aging, moistening, cutting, reordering and handling tobacco that is employed as cut filler will be apparent to those skilled in the art of tobacco product manufacture.

Processed tobaccos that can be incorporated within the smoking article can vary. Exemplary manners and methods for providing reconstituted tobacco sheet, including casting and paper-making techniques, are set forth in U.S. Pat. No. 4,674,519 to Keritsis et al.; U.S. Pat. No. 4,941,484 to Clapp et al.; U.S. Pat. No. 4,987,906 to Young et al.; U.S. Pat. No. 4,972,854 to Kiernan et al.; U.S. Pat. No. 5,099,864 to Young et al.; U.S. Pat. No. 5,143,097 to Sohn et al.; U.S. Pat. No. 5,159,942 to Brinkley et al.; U.S. Pat. No. 5,322,076 to Brinkley et al.; U.S. Pat. No. 5,339,838 to Young et al.; U.S. Pat. No. 5,377,698 to Litzinger et al.; U.S. Pat. No. 5,501,237 to Young; and U.S. Pat. No. 6,216,707 to Kumar; each of which is incorporated herein by reference. Exemplary manners and methods for providing extruded forms of processed tobaccos are set forth in U.S. Pat. No. 4,821,749 to Toft et al.; 4,880,018 to Graves, Jr. et al.; 5,072,744 to Luke et al.; U.S. Pat. No. 4,874,000 to Tamol et al.; U.S. Pat. No. 5,551,450 to Hemsley; U.S. Pat. No. 5,649,552 to Cho et al.; U.S. Pat. No. 5,829,453 to White; U.S. Pat. No. 6,125,855 to Nevett et al.; and U.S. Pat. No. 6,182,670 to White; each of which is incorporated herein by reference. Extruded tobacco materials can have the forms of cylinders, strands, discs, or the like. Exemplary expanded tobaccos (e.g., puffed tobaccos) can be provided using the types of techniques set forth in U.S. Pat. No. Re 32,013 to de la Burde et al.; U.S. Pat. No. 3,771,533 to Armstrong et al.; U.S. Pat. No. 4,577,646 to Ziehn; U.S. Pat. No. 4,962,773 to White; U.S. Pat. No. 5,095,922 to Johnson et al.; U.S. Pat. No. 5,143,096 to Steinberg; U.S. Pat. No. 5,172,707 to Zambelli; U.S. Pat. No. 5,249,588 to Brown et al.; U.S. Pat. No. 5,687,748 to Conrad; and U.S. Pat. No. 5,908,032 to Poindexter; and US Pat. Pub. 2004/0182404 to Poindexter et al.; each of which is incorporated herein by reference. One particularly preferred type of expanded tobacco is dry ice expanded tobacco (DIET). Exemplary forms of processed tobacco stems include cut-rolled stems, cut-rolled-expanded stems, cut-puffed stems and shredded-steam expanded stems. Exemplary manners and methods for providing processed tobacco stems are set forth in U.S. Pat. No. 4,195,646 to Kite; U.S. Pat. No. 5,873,372 to Honeycutt et al.; each of which is incorporated herein by reference. Manners and methods for employing tobacco dust are set forth in U.S. Pat. No. 4,341,228 to Keritsis et al.; U.S. Pat. No. 4,611,608 to Vos et al.; U.S. Pat. No. 4,706,692 to Gellatly; and U.S. Pat. No. 5,724,998 to Gellatly et al.; each of which is incorporated herein by reference. Yet other types of processed tobaccos are of the type set forth in US Pat. Pub. No. 2006/0162733 to McGrath et al.

The tobacco can be used in a blended form. Typically, the blends of various types and forms of tobaccos are provided in a blended cut filler form. For example, certain popular tobacco blends for cigarette manufacture, commonly referred to as "American blends," comprise mixtures of cut or shredded pieces of flue-cured tobacco, burley tobacco and Oriental tobacco; and such blends, in many cases, also contain pieces of processed tobaccos, such as processed tobacco stems, volume expanded tobaccos and/or reconstituted tobaccos. The precise amount of each type or form of tobacco within a tobacco blend used for the manufacture of a particular smoking article can vary, and is a manner of design choice, depending upon factors such as the sensory characteristics (e.g., flavor and aroma) that are desired. See, for example, the types of tobacco blends described in *Tobacco Encyclopedia*, Voges (Ed.) p. 44-45 (1984), Browne, *The Design of Cigarettes,* 3rd Ed., p. 43 (1990) and *Tobacco Production, Chemistry and Technology*, Davis et al. (Eds.) p. 346 (1999). See, also, the representative types of tobacco blends set forth in U.S. Pat. No. 4,836,224 to Lawson et al.; U.S. Pat. No. 4,924,888 to Perfetti et al.; U.S. Pat. No. 5,056,537 to Brown et al.; and U.S. Pat. No. 5,220,930 to Gentry; U.S. Patent Appl. Pub. Nos. 2004/0255965 to Perfetti et al.; and 2005/0066986 to Nestor et al.; PCT Appl. Pub. No. WO 02/37990 to Bereman; and Bom-

RAI Exhibit 2009
Ecto World v. RAI Strategic
IPR2024-01280

bick et al., *Fund. Appl. Toxicol.,* 39, p. 11-17 (1997); each of which is incorporated herein by reference.

Certain processed tobaccos can incorporate ingredients other than tobacco. However, it is preferred that processed tobaccos be composed predominantly of tobacco of some form, based on the dry weights of those processed tobaccos. That is, the majority of the dry weight of those processed tobaccos, and the majority of the weight of a mixture incorporating those processed tobaccos (including a blend of materials, or materials having additives applied thereto or otherwise incorporated therein), are provided by tobacco of some form. For example, those materials can be processed tobaccos that incorporate minor amounts of non-tobacco filler materials (e.g., calcium carbonate particles, spongy or absorbent materials, carbonaceous materials including carbon particles and graphite fibers, grains or wood pulp) and/or binding agents (e.g., guar gum, sodium alginate or ammonium alginate); and/or a blend of those materials can incorporate tobacco substitutes or extenders. Exemplary types of tobacco substitutes or extenders are set forth in U.S. patent application Ser. No. 11/489,334, filed Jul. 19, 2006, to Fagg et al., which is incorporated herein by reference. The foregoing materials, and blends incorporating those materials, frequently include greater than about 70 percent tobacco, often are greater than about 80 percent tobacco, and generally are greater than about 90 percent tobacco, on a dry weight basis, based on the combined weights of the tobacco, non-tobacco filler material, and non-tobacco substitute or extender. However, those processed tobaccos also can be made of virtually all tobacco, and not incorporate any non-tobacco fillers, substitutes or extenders.

The tobacco can be treated with tobacco additives of the type that are traditionally used for the manufacture of tobacco products. Those additives can include the types of materials used to enhance the flavor and aroma of tobaccos used for the production of cigars, cigarettes, pipes, and the like. For example, those additives can include various cigarette casing and/or top dressing components. See, for example, U.S. Pat. No. 3,419,015 to Wochnowski; U.S. Pat. No. 4,054,145 to Berndt et al.; U.S. Pat. No. 4,887,619 to Burcham, Jr. et al.; 5,022,416 to Watson; U.S. Pat. No. 5,103,842 to Strang et al.; and U.S. Pat. No. 5,711,320 to Martin. Preferred casing materials include water, sugars and syrups (e.g., sucrose, glucose and high fructose corn syrup), humectants (e.g. glycerin or propylene glycol), and flavoring agents (e.g., cocoa and licorice). Those added components also include top dressing materials (e.g., flavoring materials, such as menthol). See, for example, U.S. Pat. No. 4,449,541 to Mays et al. Additives also can be added to the tobacco using the types of equipment described in U.S. Pat. No. 4,995,405 to Lettau, or that are available as Menthol Application System MAS from Kohl Maschinenbau GmbH. The selection of particular casing and top dressing components is dependent upon factors such as the sensory characteristics that are desired, and the selection and use of those components will be readily apparent to those skilled in the art of cigarette design and manufacture. See, Gutcho, *Tobacco Flavoring Substances and Methods*, Noyes Data Corp. (1972) and Leffingwell et al., *Tobacco Flavoring for Smoking Products* (1972). The tobacco also may be treated, for example, with ammonia or ammonium hydroxide or otherwise treated to incorporate ammonia (e.g., by addition of ammonia salts such as, for example, diammonium phosphate). Preferably, the amount of ammonia optionally incorporated into the smokable tobacco is less than about 5 percent, and generally about 1 to about 3 percent, based on the dry weight of the tobacco.

Tobacco can be incorporated with the smoking article in a form other than cut filler form. For example, tobacco leaf and/or reconstituted tobacco sheet can be used as a wrapper for a tobacco-containing component having the form of a cigar or an inner wrapper of a double wrapped cigarette rod. Alternatively, processed tobaccos, such as certain types of reconstituted tobaccos, can be employed as longitudinally extending strands. See, for example, the type of configuration set forth in U.S. Pat. No. 5,025,814 to Raker, which is incorporated herein by reference. In addition, certain types of reconstituted tobacco sheets can be formed, rolled or gathered into a desired configuration. In addition, molded, compressed or extruded segments or pieces of tobacco-containing materials that are formed into desired shapes (e.g., strands, tubes, cylinders, pellets, or the like) can be incorporated within the aerosol delivery article. See, for example, U.S. Pat. No. 4,836,225 to Sudoh; U.S. Pat. No. 4,893,639 to White; U.S. Pat. No. 4,972,855 to Kuriyama et al.; and U.S. Pat. No. 5,293,883 to Edwards; each of which is incorporated herein by reference. If desired, finely milled tobacco or tobacco dust can be incorporated within other types of processed tobaccos, such as extrudate formulations, reconstituted tobacco sheets, or the like. Furthermore, finely milled tobacco or tobacco dust can be contained on substrates, such as membranes or screens. If desired, at least a portion of the tobacco can be heat treated prior to use within the smoking article (e.g., have the form of high temperature dried, toasted, pre-pyrolyzed, condensed volatiles collected after tobacco is heated, condensed tobacco smoke components, or the like).

At least a portion of the tobacco incorporated with the smoking article can be provided in the form of a tobacco extract. As used herein, the term "tobacco extract" means components separated from, removed from, or derived from, tobacco using tobacco extraction processing conditions and techniques. Typically, tobacco extracts are obtained using solvents, such as solvents having an aqueous nature (e.g., water) or organic solvents (e.g., alcohols, such as ethanol or alkanes, such as hexane). As such, extracted tobacco components are removed from tobacco and separated from the unextracted tobacco components; and for extracted tobacco components that are present within a solvent, (i) the solvent can be removed from the extracted tobacco components, or (ii) the mixture of extracted tobacco components and solvent can be used as such. For example, tobacco can be subjected to extraction conditions using water as a solvent; the resulting aqueous extract of tobacco then is separated from the water insoluble pulp; and then (i) the mixture of aqueous extract of tobacco within water can be used as such, or (ii) substantial amounts of the water can be removed from extracted tobacco components (e.g., using spray drying or freeze drying techniques) in order to provide a tobacco extract in powder form. Preferred tobacco extracts incorporate numerous components that are separated from, removed from, or derived from, tobacco; and are not obtained using tobacco extraction processes conditions that are highly selective to a single component (e.g., preferred extracts are not high nicotine content extracts, or extracts that can be characterized as relatively pure nicotine compositions). As such, exemplary preferred tobacco extracts possess less than 45 percent nicotine, often less than 35 percent nicotine, and frequently less than 25 percent nicotine, on the basis of the total extract weight with solvent removed (e.g., on a dry weight basis when the solvent is water). In addition, highly preferred tobacco extracts are highly aromatic and flavorful, and hence introduce desirable sensory characteristics to the aerosol produced by the smoking articles incorporating

RAI Exhibit 2009
Ecto World v. RAI Strategic
IPR2024-01280

those extracts. Exemplary types of tobacco extracts, tobacco essences, solvents, tobacco extraction processing conditions and techniques, and tobacco extract collection and isolation procedures, are set forth in Australia Pat. No. 276,250 to Schachner; U.S. Pat. No. 2,805,669 to Meriro; U.S. Pat. No. 3,316,919 to Green et al.; U.S. Pat. No. 3,398,754 to Tughan; U.S. Pat. No. 3,424,171 to Rooker; U.S. Pat. No. 3,476,118 to Luttich; U.S. Pat. No. 4,150,677 to Osborne; U.S. Pat. No. 4,131,117 to Kite; U.S. Pat. No. 4,506,682 to Muller; U.S. Pat. No. 4,986,286 to Roberts et al.; U.S. Pat. No. 5,005,593 to Fagg; U.S. Pat. No. 5,065,775 to Fagg; U.S. Pat. No. 5,060,669 to White et al.; U.S. Pat. No. 5,074,319 to White et al.; U.S. Pat. No. 5,099,862 to White et al.; U.S. Pat. No. 5,121,757 to White et al.; U.S. Pat. No. 5,131,415 to Munoz et al.; U.S. Pat. No. 5,230,354 to Smith et al.; U.S. Pat. No. 5,235,992 to Sensabaugh; U.S. Pat. No. 5,243,999 to Smith; U.S. Pat. No. 5,301,694 to Raymond; U.S. Pat. No. 5,318,050 to Gonzalez-Parra et al.; U.S. Pat. No. 5,435,325 to Clapp et al.; and U.S. Pat. No. 5,445,169 to Brinkley et al.; each of which is incorporated herein by reference.

Tobacco extracts typically are carried by a substrate, or are otherwise contained within a carrier or material. The substrate for the tobacco extract can be provided by generally solid substances, such as alumina beads, pieces of carbonaceous materials, paper or paper-type materials (e.g., shredded or gathered pieces of porous paper, papers incorporating tobacco materials such as tobacco stems or stalks, papers incorporating pieces of absorbent carbon particles, or the like), pieces of tobacco lamina and/or stem, pieces of processed tobacco, synthetic fibers, or the like. Alternatively, the tobacco extract can be mixed with generally liquid or fluid substances, such as solvents, aerosol-forming materials, flavor carrying agents, and the like. Mixtures of tobacco extracts and generally liquid or fluid substances, in turn, can be carried by generally solid substrate materials or can be contained within suitable containers, vials, cartridges, or the like.

Various manners and methods for incorporating tobacco into smoking articles, and particularly smoking articles that are designed so as to not purposefully burn virtually all of the tobacco within those smoking articles, are set forth in U.S. Pat. No. 4,947,874 to Brooks et al.; U.S. Patent Application Pub. No. 2005/0016549 to Banerjee et al.; and U.S. patent applcation Ser. No. 11/194,215 filed Aug. 1, 2005, to Cantrell et al. and Ser. No. 11/377,630 filed Mar. 16, 2006 to Crooks et al.; which are incorporated herein by reference. In addition, tobacco has been incorporated with cigarettes that have been marketed commercially under the brand names "Premier" and "Eclipse" by R. J. Reynolds Tobacco Company. See, for example, those types of cigarettes described in *Chemical and Biological Studies on New Cigarette Prototypes that Heat Instead of Burn Tobacco*, R. J. Reynolds Tobacco Company Monograph (1988) and *Inhalation Toxicology,* 12:5, p. 1-58 (2000). Tobacco also has been incorporated within a smoking article that has been marketed commercially by Philip Morris Inc. under the brand name "Accord."

The smoking article of the present invention further includes an aerosol-generating material, which can be in intimate contact with the tobacco material (e.g., in the form of an intimate mixture), or can be carried by a non-tobacco substrate and segregated from the tobacco in the smoking article (e.g., positioned in an adjacent region of the device). The aerosol-generating material is positioned in fluid communication with the tobacco material such that air can be drawing through both the tobacco and the aerosol-generating material, thereby generating an aerosol that includes volatilized portions of the aerosol-generating material and volatilized components derived from the tobacco. The aerosol-forming material can vary, and mixtures of various aerosol-forming materials can be used. Representative types of aerosol-forming materials are set forth in U.S. Pat. No. 4,793,365 to Sensabaugh, Jr. et al.; and U.S. Pat. No. 5,101,839 to Jakob et al.; PCT Appl. Pub. No. WO 98/57556 to Biggs et al.; EPO 1,618,803 to Hon; and *Chemical and Biological Studies on New Cigarette Prototypes that Heat Instead of Burn Tobacco*, R. J. Reynolds Tobacco Company Monograph (1988); which are incorporated herein by reference.

A preferred aerosol-forming material produces a visible aerosol upon the application of sufficient heat thereto, or otherwise through the action of aerosol forming conditions using components of the smoking article. A highly preferred aerosol-forming material produces an aerosol that can be considered to be "smoke-like." A preferred aerosol-forming material is chemically simple, relative to the chemical nature of the smoke produced by burning tobacco. A preferred aerosol-forming material is a polyol; and exemplary preferred aerosol-forming materials include glycerin, propylene glycol, and mixtures thereof. If desired, aerosol-forming materials can be combined with other liquid materials, such as water. For example, aerosol-forming material formulations can incorporate mixtures of glycerin and water, or mixtures of propylene glycol and water. Exemplary aerosol-forming materials also include those types of materials incorporated within devices available through Atlanta Imports Inc., Acworth, Georgia, USA., as an electronic cigar having the brand name E-CIG, which can be employed using associated Smoking Cartridges Type C1a, C2a, C3a, C4a, C1b, C2b, C3b and C4b; and as Ruyan Atomizing Electronic Pipe and Ruyan Atomizing Electronic Cigarette from Ruyan SBT Technology and Development Co., Ltd., Beijing, China.

The aerosol-forming material can be maintained within the smoking article in a variety of ways. For example, the aerosol-forming material can be contained within a container in liquid form, or soaked within absorbent fibrous materials or sponge-like materials. Exemplary absorbent materials can be composed of synthetic polymeric materials, such as fibers of polyethylene terephthalate. Alternatively, the aerosol-forming material can be incorporated within, or carried by, a material that acts as a substrate. For example, the substrate can be, at least in part, a material that incorporates tobacco. Exemplary substrate materials, and exemplary formulations incorporating aerosol-forming materials, are set forth in U.S. Pat. No. 4,793,365 to Sensabaugh et al.; U.S. Pat. No. 4,893,639 to White; U.S. Pat. No. 5,099,861 to Clearman et al.; U.S. Pat. No. 5,101,839 to Jakob et al.; U.S. Pat. No. 5,105,836 to Gentry et al.; U.S. Pat. No. 5,159,942 to Brinkley et al.; U.S. Pat. No. 5,203,355 to Clearman et al.; U.S. Pat. No. 5,271,419 to Arzonico et al.; U.S. Pat. No. 5,327,917 to Lekwauwa et al.; U.S. Pat. No. 5,396,911 to Casey, III et al.; U.S. Pat. No. 5,533,530 to Young et al.; U.S. Pat. No. 5,588,446 to Clearman; U.S. Pat. No. 5,598,868 to Jakob et al.; and U.S. Pat. No. 5,715,844 to Young et al.; and U.S. Patent Application Pub. No. 2005/0066986 to Nestor et al.; which are incorporated herein by reference. See, also, *Chemical and Biological Studies on New Cigarette Prototypes that Heat Instead of Burn Tobacco*, R. J. Reynolds Tobacco Company Monograph (1988). Exemplary substrate materials have been incorporated within the types of cigarettes commercially

RAI Exhibit 2009
Ecto World v. RAI Strategic
IPR2024-01280

marketed under the trade names "Premier" and "Eclipse" by R. J. Reynolds Tobacco Company.

The substrate material can incorporate tobacco of some form, normally is composed predominantly of tobacco, and can be provided by virtually all tobacco material. The form of the substrate material can vary; but most preferably that material is employed in an essentially traditional cigarette, cigar or pipe filler form (e.g., as cut filler). The substrate material can be otherwise formed into desired configurations. The substrate material can be used in the form of a gathered web or sheet, using the types of techniques generally set forth in U.S. Pat. No. 4,807,809 to Pryor et al. The substrate material can be used into the form of a web or sheet that is shredded into a plurality of longitudinally extending strands, using the types of techniques generally set forth in U.S. Pat. No. 5,025,814 to Raker. The substrate material can have the form of a loosely rolled sheet, such that a spiral type of air passageway extends longitudinally through the aerosol-generation segment. Representative types of tobacco containing substrate materials can be manufactured from mixtures of tobacco types; or from one predominant type of tobacco (e.g., a cast sheet-type or paper-type reconstituted tobacco composed primarily of burley tobacco, or a cast sheet-type or paper-type reconstituted tobacco composed primarily of Oriental tobacco).

The substrate material also can be treated with tobacco additives of the type that are traditionally used for the manufacture of cigarettes, such as casing and/or top dressing components. The substrate material optionally can be ammoniated (e.g., by treatment with anhydrous ammonia, aqueous ammonium hydroxide, or ammonium salts such as diammonium phosphate). Alternatively those materials can be absent, or virtually absent, of any type of added ammonia (e.g., whether by treatment with anhydrous ammonia, aqueous ammonium hydroxide, or ammonium salts such as diammonium phosphate). Those materials also can be treated with other additives, such as potassium carbonate or sodium bicarbonate. Other materials, such as catalytic agents, nanoparticle compositions, and the like, also can be incorporated within any of the smokable materials of the smokable rod. See, for example, the types of components set forth in US Pat. Publication 2004/0173229 to Crooks et al. Preferably, the material is not treated with more that about 10 percent of any of those types of additive agents other than aerosol-forming materials, based on the dry weight of tobacco material within that substrate material.

The manner by which the aerosol-forming material is contacted with the substrate material (e.g., the tobacco) can vary. The aerosol-forming material can be applied to a formed tobacco material, or can be incorporated into processed tobaccos during manufacture of those tobaccos. The aerosol-forming material can be dissolved or dispersed in an aqueous liquid, or other suitable solvent or liquid carrier, and sprayed onto that substrate material. See, for example, U.S. Patent Appl. Pub. No. 2005/0066986 to Nestor et al. The amount of aerosol-forming material employed relative to the dry weight of substrate material can vary. Materials including exceedingly high levels of aerosol-forming material can be difficult to process into cigarette rods using conventional types of automated cigarette manufacturing equipment.

Cast sheet types of processed tobaccos preferably can incorporate relatively high levels aerosol-forming material. Reconstituted tobaccos manufactured using paper-making types of processes preferably can incorporate moderate levels of aerosol-forming material. Tobacco lamina strip and tobacco cut fuller can incorporate lower amounts of aerosol-forming material. For processed materials, such as cast sheet materials and paper-type reconstituted tobaccos, tobacco pulp materials that are extracted with aqueous liquids can be used as components thereof. The removal of some fraction or essentially all of the water soluble components of tobacco can assist in providing a processed material that is capable of acting as an effective substrate for higher levels of aerosol-forming material. In addition, dusting processed tobaccos with dry tobacco powders can assist in providing processed materials having relatively high levels of glycerin while not demonstrating overly tacky or sticky characteristics. Alternatively, relatively high levels of aerosol-forming materials can be applied to, or incorporated within, tobacco substrate materials; and those resulting materials can be considered to be somewhat moist, wet, tacky, sticky or gooey in nature.

Cast sheet processes tobaccos, and particularly cast sheet tobaccos incorporating certain amounts of tobacco pulp that have been extracted with water, often can comprise up to about 65 percent, often up to about 60 percent, and frequently up to about 55 percent, aerosol-forming material, based on the dry weight of the tobacco and aerosol-forming material in the processed material so produced. Paper-type reconstituted tobaccos, and particularly those forms of tobacco incorporating certain amounts of tobacco pulp materials that have been extracted with water, and not reapplying some or all of the water soluble extract components back to that pulp, often can comprise up to about 55 percent, often up to about 50 percent, and frequently up to about 45 percent, aerosol-forming material, based on the dry weight of the tobacco and aerosol-forming material in the material so produced. A tobacco material produced by spraying tobacco strip or cut filler with aerosol-forming material often does not comprise more than about 20 percent, and frequently does not comprise more than about 15 percent, aerosol-forming material, based on the dry weight of the tobacco and aerosol-forming material of the material so produced. Materials having relatively high loading levels of aerosol-forming material can be dried (e.g., by being subjected to a flow of hot air) to a moisture content of about 4 percent to about 5 percent, by weight; the dried material then can be processed to form the components of the designed configuration; and then those components can be re-equilibrated to a moisture content of about 12 to about 13 weight percent. Alternatively, those materials can be used in a somewhat moist or wet form.

Other types of materials incorporating relatively high levels of aerosol-forming material can be incorporated in the smoking article. Formed, encapsulated or microencapsulated materials can be employed. Such types of materials preferably include primarily of aerosol-forming material, and those materials most preferably incorporate some amount and form of tobacco. An example of such a type of material is a film produced by casting and drying an aqueous solution of about 65 to about 70 weight parts glycerin, and about 25 to about 30 weight parts binder (e.g., citrus pectin, ammonium alginate, sodium alginate or guar gum), and about 5 weight parts flavoring agent (e.g., vanillin, coffee, tea, cocoa and/or fruit flavor concentrates); and then surface-coating that film with about 2 to about 10 weight parts of a finely divided powder that is provided by milling tobacco lamina.

The amount of aerosol-forming material that is used within the smoking article is such that the cigarette exhibits acceptable sensory and organoleptic properties, and desirable performance characteristics. For example, it is highly preferred that sufficient aerosol-forming material, such as glycerin and/or propylene glycol, be employed in order to

RAI Exhibit 2009
Ecto World v. RAI Strategic
IPR2024-01280

provide for the generation of a visible mainstream aerosol that in many regards resembles the appearance of tobacco smoke. Typically, the amount of aerosol-generating material incorporated into the smoking article is in the range of less than about 1.5 g, often less than about 1 g, and sometimes less than about 0.5 g. The amount of aerosol-forming material is dependent upon factors such as the number of puffs desired per tobacco-containing cartridge or cigarette incorporated within the smoking article. The amount of aerosol-forming material also can be dependent upon factors such as the position or location of that material relative to the heat-producing components of the smoking article, the ability of that material to wick or transfer to heating regions within the smoking article, the desired concentration of that material in the aerosol generated by the smoking article, and the like.

It is desirable for the aerosol-generating composition not to introduce significant degrees of unacceptable off-taste, filmy mouth-feel, or an overall sensory experience that is significantly different from that of a traditional type of cigarette that generates mainstream smoke by burning tobacco cut filler. The selection of the particular aerosol-generating material and substrate material, the amounts of those components used, and the types of tobacco material used, can be altered in order to control the overall chemical composition of the mainstream aerosol produced by the cigarette.

Other types of flavoring agents, or materials that alter the sensory or organoleptic character or nature of the mainstream aerosol of the smoking article, can be employed. Such flavoring agents can be provided from sources other than tobacco, can be natural or artificial in nature, and can be employed as concentrates or flavor packages. Of particular interest are flavoring agents that are applied to, or incorporated within, those regions of the smoking article where aerosol is generated. Exemplary flavoring agents include vanillin, ethyl vanillin, cream, tea, coffee, fruit (e.g., apple, cherry, strawberry, peach and citrus flavors, including lime and lemon), maple, menthol, mint, peppermint, spearmint, wintergreen, nutmeg, clove, lavender, cardamom, ginger, honey, anise, sage, cinnamon, sandalwood, jasmine, cascarilla, cocoa, licorice; and flavorings and flavor packages of the type and character traditionally used for the flavoring of cigarette, cigar and pipe tobaccos. Syrups, such as high fructose corn syrup, also can be employed. Flavoring agents also can include acidic or basic characteristics (e.g., organic acids, such as levulinic acid). Preferably, such flavoring agents constitute less than about 10 percent, and often less than about 5 percent of the total weight of tobacco, on a dry weight basis. The flavoring agents can be added to the tobacco material or to the aerosol-generating material or both.

The amount of tobacco incorporated within each smoking article can vary. For certain embodiments, the amount of tobacco cut filler incorporated within each smoking article is at least about 20 mg, generally at least about 50 mg, often at least about 75 mg, and frequently at least 100 mg, on a dry weight basis. For certain embodiments, the amount of tobacco cut filler incorporated within each smoking article does not exceed about 400 mg, generally does not exceed about 350 mg, often does not exceed about 300 mg, and frequently does not exceed about 250 mg, on a dry weight basis. For segments or sections incorporating tobacco cut filler or processed tobacco in cut filler form, the packing density of the material within those segments or sections typically is less than about 400 mg/cm^3, and generally is less than about 350 mg/cm^3; while the packing density of the material within those segments or sections can exceed about 100 mg/cm^3, and often can exceed about 150 mg/cm^3. Preferably, each such segment or section is composed entirely of tobacco and/or processed tobacco. Alternatively, each such segment or section can be composed of tobacco and/or processed tobacco mixed or blended with a non-tobacco substrate material. In either case, the tobacco material, and optional non-tobacco substrate material, can act as a substrate for aerosol-forming materials, flavoring agents, and the like.

The moisture content of the tobacco that is used within the smoking article can vary. Typically, the moisture content of the tobacco exceeds about 12 weight percent, and often can exceed about 15 weight percent. In certain circumstances, moist tobacco can be employed; and that tobacco can have a moisture content in excess of about 20 weight percent, often in excess of about 30 weight percent, and even in excess of about 40 weight percent.

Certain embodiments of the smoking article of the invention incorporate a cigarette rod as a necessary component. That is, the smoking article of the invention can incorporate a tobacco rod wrapped in paper or other wrapping material. The wrapping material used as a wrapper for containing the tobacco, and hence used for cigarette manufacture, can vary. Exemplary types of wrapping materials are set forth in U.S. Pat. No. 4,938,238 to Barnes et al. and U.S. Pat. No. 5,105,837 to Barnes et al. Wrapping materials, such as those set forth in U.S. Patent Appl. Pub. No. 2005/0005947 to Hampl, Jr. et al. and PCT Appl. Pub. No. WO 2005/039326 to Rasouli et al., can be employed as inner wrapping materials of a so-called "double wrap" configuration. An exemplary type of heat conductive wrapping material is set forth in U.S. Pat. No. 5,551,451 to Riggs et al.; and other suitable wrapping materials are set forth in U.S. Pat. No. 5,065,776 to Lawson et al. and U.S. Pat. No. 6,367,481 to Nichols et al.; each of which is incorporated herein by reference. Exemplary wrapping materials, such as laminates of paper and metal foil, and papers used as the outer circumscribing wrapper of the heat generation segment, have been incorporated within the types of cigarettes commercially marketed under the trade names "Premier" and "Eclipse" by R. J. Reynolds Tobacco Company. Other representative wrapping materials, and processed wrapping materials, suitable for use for cigarette manufacture are set forth in U.S. Pat. No. 5,220,930 to Gentry; U.S. Pat. No. 6,976,493 to Chapman et al.; and U.S. Pat. No. 7,047,982 to Seymour et al.; and U.S. patent application Ser. No. 11/377,630 filed Mar. 16, 2006 to Crooks et al.; each of which is incorporated herein by reference. Paper materials can be composed of materials, or treated with films, in order to provide resilience, particularly when the paper material is used to contain tobacco materials that are substrates for relatively high amounts of liquid materials (e.g., aerosol-forming materials). For example, such papers can be treated with coatings of nitrocellulose or ethylcellulose. Alternatively, paper materials can be highly absorbent in nature, and can act as substrates for liquid materials (e.g., aerosol-forming materials, liquid flavoring agents, or mixture of aerosol-forming materials and tobacco extracts).

The tobacco can be wrapped in at least one layer of tobacco lamina and/or reconstituted tobacco sheet. As such, the tobacco that is incorporated within the smoking article is configured in a type of form characteristic of a cigar. Outer wrappers for cigar type tobacco segments or sections can act as substrates for liquid materials (e.g., aerosol-forming materials, liquid flavoring agents, tobacco extracts, or mixtures thereof).

RAI Exhibit 2009
Ecto World v. RAI Strategic
IPR2024-01280

The tobacco can be wrapped in moisture permeable and air permeable pouches, sachets, packets, or the like. For example, finely divided tobacco pieces can be sealed in mesh-type pouches. Suitable pouches are of the type traditionally used for containment of certain types of smokeless tobacco products. See, for example, the types of pouches and types of contents of those pouches that are set forth in U.S. patent application Ser. No. 11/233,399, filed Sep. 22, 2005, to Holton et al.; Ser. No. 11/351,919, filed Feb. 10, 2006, to Holton et al.; and Ser. No. 11/461,633, filed Aug. 1, 2006, to Mua et al.; which are incorporated herein by reference. Such pouches and the contents thereof can act as substrates for significant amounts of aerosol-forming materials, flavoring agents and tobacco extracts. For example, relatively high levels of liquid materials can be applied to, or incorporated within, those substrates; and those resulting materials can be considered to be moist, wet, tacky, sticky or gooey in nature. If desired, those substrates can be soaked in liquid mixtures of aerosol-forming material and other components that provide tobacco flavor characteristics to the aerosol produced by the smoking article. The number of such types of pouches that are incorporated within a representative smoking article can vary, and typically can range, for example, from 1 to about 5.

The smoking article typically possesses a mouth-end piece. Representative types of filter elements, such as those employed for cigarettes, including segmented cigarette filter elements, are set forth in U.S. patent application Ser. No. 11/461,941, filed Aug. 2, 2006, to Nelson et al., which is incorporated herein by reference. Mouth-end pieces also can be fashioned into desired shapes using plastic materials such as nylon, polypropylene, polystyrene, poly(butadiene/styrene/acrylonitrile), or the like.

Representative smoking articles can possesses certain components comparable to, and operate in a manner generally comparable to, that type of device set forth in EPO 1,618,803 to Hon. Representative smoking articles, and exemplary components thereof, also can be provided using components of those nicotine aerosol delivery systems available through Atlanta Imports Inc., Acworth, Georgia, USA., as an electronic cigar having the brand name E-CIG, which can be employed using associated Smoking Cartridges Type C1a, C2a, C3a, C4a, C1b, C2b, C3b and C4b. Exemplary components for representative smoking articles also have been available components of those devices available as Ruyan Atomizing Electronic Pipe and Ruyan Atomizing Electronic Cigarette from Ruyan SBT Technology and Development Co., Ltd., Beijing, China.

Aspects and embodiments of the present invention relating to various smoking articles now are described with reference to the illustrations contained in FIGS. **1-3**. Referring to FIG. **1**, an embodiment of a representative smoking article **10** is shown. The smoking article **10** has an overall shape that is generally rod-like or tubular in nature, generally akin to a cigarette-type or cigar-type smoking article. The smoking article **10** includes a distal end **13** and a mouth-end **15**.

The smoking article **10** possesses an outer container or housing **20**. Although the dimensions and shape of the outer container **20** can vary, a representative outer housing is generally tubular in shape (e.g., having an overall length of about 11 cm and an outer diameter of about 1.5 cm). The outer housing **20** can be provided using a variety of materials. For example, the outer housing **20** can be provided from metal (e.g., aluminum or stainless steel), heat-resistant plastic (e.g., polycarbonate), treated paperboard material, or the like. If desired, the outer housing can possess an aesthetically pleasing cover (not shown). A representative outer housing can be of the type possessed by the Ruyan Atomizing Electronic Cigarette available from Ruyan SBT Technology and Development Co., Ltd. As shown, the outer housing **20** includes a mouth-end **15** and an end **13** distal to the mouth-end, wherein the mouth-end comprises an opening adapted for egress of an aerosol generated within the smoking article and the distal end comprises an opening adapted for intake of air into the smoking article **10**.

The distal end **13** of the outer container **20** of the smoking article **10** can possess an end cover or cap **35**. The end cover or cap **35** can be maintained in place by friction fit, a threaded screw mechanism that cooperates with a complementing threaded mechanism **28** that is secured to the distal region of the outer container, or the like. The end cover **35** can act to assist in maintaining various components of the smoking article contained within the outer container. The end cover preferably possesses at least one air passageway **32** to allow drawn air to enter the inner region of the outer container **20**. A representative end cover or cap **35** can be of the type possessed by the Ruyan Atomizing Electronic Cigarette available from Ruyan SBT Technology and Development Co., Ltd.

Within the outer container **20** is located an electric power source **36**, such as at least one battery. The battery typically is maintained in place by a generally tubular battery holder **40** that is positioned and secured in place within the outer container **20**. Typically, at least one longitudinally extending air passageway **45** allows for drawn air to pass by the battery towards the mouth-end **15** of the smoking article **10**. As shown, the passageway **45** can be created by incorporation of one or more grooves in the battery holder **40** or, alternatively, by incorporating ribs (not shown) extending into the interior of the battery holder in order to prevent the power source **36** from entering the passageway. The battery holder **40** also can act as a container for relevant electrical wiring (not shown) that passes from the battery to downstream regions of the smoking article **10**. Representative types of power sources, and representative arrangements thereof within the outer container, are of the type incorporated within a device available as Ruyan Atomizing Electronic Cigarette from Ruyan SBT Technology and Development Co., Ltd. If desired, higher power electrical power sources can be employed.

The smoking article **10** incorporates various electrically powered control components **50**. For a representative embodiment, the control components **50** are positioned within the tubular battery holder **40** in a region downstream from the battery **36**. Typically, the electrically-powered control components **50** include microchips that provide control of time of operation, control of current, control of electrical resistance heat generation, and the like. Exemplary circuits that can be included in the controller **50** are set forth in FIGS. **4-5**. The electrically-powered components **50** are powered by the battery **36**. Representative types of electronic control components are of the type can be of the type possessed by the Ruyan Atomizing Electronic Cigarette available from Ruyan SBT Technology and Development Co., Ltd. See, also, the types of electronic systems set forth in U.S. Pat. No. 4,947,874 to Brooks et al.

The representative smoking article **10** incorporates suitably adapted sensing mechanism **60** in order to provide for operation of the electrically powered components during desired periods of time. Representative types of sensing mechanism components are incorporated within a device available as Ruyan Atomizing Electronic Cigarette from Ruyan SBT Technology and Development Co., Ltd. See,

RAI Exhibit 2009
Ecto World v. RAI Strategic
IPR2024-01280

also, those types of airflow sensing mechanisms proposed in EPO 1,618,803 to Hon; and U.S. Pat. No. 4,735,217 to Gerth et al.; U.S. Pat. No. 4,947,874 to Brooks et al.; and U.S. Pat. No. 5,388,574 to Ingebrethsen. The sensing mechanism **60** also can be powered by the battery **36**. Typically, the sensing mechanism components **60** are positioned within the outer container **20** in a location downstream from the electrically powered control components **50**. The sensor **60**, in concert with certain control circuitry within the controller **50**, is preferably part of a puff-actuated controller adapted for regulating current flow through one or more of the resistance heating elements discussed below. The sensor **60** is preferably adapted for sensing draw (i.e., intake of air from the smoking article) by the user of the smoking article. Representative types of draw sensors are set forth in U.S. Pat. No. 4,947,874 to Brooks et al., wherein pressure sensitive switches are discussed, such as pressure sensitive differential switches available from Micro Pneumatic Logic, Inc. of Ft. Lauderdale, Florida, pressure sensitive transducers, airflow-deflected vanes with motion sensors, and the like. See also, U.S. Pat. No. 7,117,867 to Cox et al. The sensor **60** is configured to allow airflow through or around the sensor. In the embodiment shown, the sensor **60** is configured in an annular shape with a passageway through the center thereof. Other configurations are also possible, such as configurations with multiple passageways through or around the sensor **60**.

The representative smoking article **10** also incorporates at least one electrical resistance heating element **70**, **72**. An optional first resistance heating element **70** can be located upstream from the sensing mechanism **60**, and as such, can act to heat drawn air passing through the smoking article from the distal end **13** of the outer housing **20**. A second resistance heating element **72** can be located downstream from the sensing mechanism **60**. The resistance heating elements **70**, **72** also can be powered by the battery **36**, and control of the operation of those heating elements can be controlled by the electrically powered control components **50**. The heating elements **70**, **72** are configured to allow airflow therethrough. The heating element **70** upstream of the sensor **60** is configured in the same manner as the sensor (i.e., in an annular shape); however, other configurations are possible as noted above.

Typically, the second resistance element **72** can be formed from relatively high surface area absorbent or wicking-type materials, such as graphite yarn, high surface area metallic cloth or screen, or the like. Resistance elements of such type are useful for supporting or holding sufficient aerosol-forming material for aerosol generation, as well as for wicking additional aerosol-forming material for aerosol generation during subsequent puffs. Alternatively, the second resistance element **72** can be employed in close proximity to an absorbent wicking material such that aerosol-forming material can be wicked or otherwise transferred so as to contact the second resistance element or contact an area in close proximity to the second resistance element (e.g., a region that is exposed to a the heat produced by the second resistance element). Representative types of resistance heating elements are incorporated within a device available as Ruyan Atomizing Electronic Cigarette from Ruyan SBT Technology and Development Co., Ltd. If desired, each of the heating elements **70**, **72** can be arranged to have current pass therethrough (and hence provide heat) in response to a signal provided by a puff-actuated controller that regulates current through one or more of the heating elements in response to signals from the sensor **60**. For example, each heating element **70**, **72** can be turned "on" and "off" in response to a signal provided in response to the sensing mechanism **60** and related control circuitry. Alternatively, current flow through the first heating element **70** can be controlled during periods of normal use of the smoking article **10**, and current flow through the second heating element **72** can be controlled only during periods of draw (i.e., the second heating element will be energized when the sensor **60** detects draw by the user).

The representative smoking article **10** of FIG. **1** incorporates a cartridge **85**. The cartridge can be manufactured from a variety of materials, such as metal (e.g., aluminum or stainless steel), paper (e.g., paperboard or paper coated with a hydrophobic film or coating), plastic (e.g., polyester, polypropylene, nylon, polycarbonate, or the like). The cartridge **85** contains tobacco **89** in some form. The cartridge **85** also most preferably contains aerosol-forming material. The tobacco **89** and the aerosol-forming material can be in the form of an intimate mixture or provided in separate regions of the cartridge **85**. Representative types of cartridges are of the type incorporated within a device available as Ruyan Atomizing Electronic Cigarette from Ruyan SBT Technology and Development Co., Ltd. can be modified by adding tobacco extract thereto, or by removing at least a portion of the substrate and nicotine-containing material incorporated therein and replacing that removed portion with a tobacco composition. For example, for the embodiment shown in FIG. **1**, the cartridge **85** can contain an upstream segment **95** composed of tobacco filler or processed tobacco filler material **89** incorporating aerosol-forming material, and a downstream segment **98** composed of a substrate **101**, such as fibers of polyethylene terephthalate carrying flavors and/or aerosol-forming material. The representative smoking article **10** is assembled such that a certain amount of aerosol-forming material and tobacco components can be wicked or otherwise transferred to heating element **72** or the region in close proximity to the heating element. Optionally, as shown, the extreme mouth end region of the cartridge **85** is sealed, and as such, tobacco components and aerosol-forming material have a tendency to travel upstream towards the resistance heater **72**. Typically, at least one air passageway **115** extends longitudinally between the inner surface of the outer container **20** and the outer surface of the cartridge **85**. This air passageway **115** can be created using the same techniques noted above in connection with the passageway **45** in the batter holder **40**.

A representative cartridge **85** is provided by modifying the components of a cartridge employed in a device available as Ruyan Atomizing Electronic Cigarette from Ruyan SBT Technology and Development Co., Ltd. For example, the section or segment of the fibrous substrate and aerosol-forming material is removed from that cartridge and discarded, and that portion is replaced by a section or segment composed of tobacco cut filler saturated with a mixture of glycerin and spray dried tobacco extract. As another example, a web of reconstituted tobacco sheet that is gathered so as to possess a plurality of longitudinally extending passageways can be treated with a mixture of propylene glycol, flavoring agent and tobacco extract. As still another example, the whole section or segment of the fibrous substrate and aerosol-forming material is removed from that cartridge and discarded, and all of that material is replaced by a section or segment composed of aqueous extracted tobacco cut filler pulp saturated or nearly saturated with a mixture of glycerin, flavoring agent and spray dried tobacco extract. As a further example, the fibrous substrate and aerosol-forming material can be positioned in the upstream end of the cartridge, and the downstream end of the cartridge

RAI Exhibit 2009
Ecto World v. RAI Strategic
IPR2024-01280

can be provided by a plurality of formed tobacco pieces or pellets that act as a substrate for aerosol-forming material and flavoring agent.

The amount of aerosol-forming material, tobacco extract, flavoring agent, and the like that is carried by the substrate can vary; and the weight of those ingredients typically can be as much as at least equal to, often can be at least about twice that, and frequently can be at least about three times that, of the dry weight of the substrate. As such, the cartridge can be adapted to provide components, of types and in amounts, sufficient to provide aerosols demonstrating acceptable visual characteristics, acceptable mouthfeel and other organoleptic effects, acceptable tobacco flavor, and the like.

In a further embodiment, tobacco can be incorporated within a cartridge **85** having the ability to act as a type of liquid storage container of the smoking article. For example, powdered spray dried tobacco extract can be incorporated within the liquid storage container **85**, or liquid tobacco extracts or essences can be combined within components contained within the liquid storage container (e.g., aerosol-forming materials) so as to be intimately combined with those components. In another embodiment, pieces of tobacco lamina, stems, or processed tobacco can be incorporated within the liquid storage container **85**. For example, pieces of tobacco lamina cut filler, tobacco dust, or pieces of reconstituted tobacco sheet, can be incorporated within the liquid storage container. As such, the tobacco can be mixed with, or be part of, the aerosol-forming mixture within the cartridge **85**. Most preferably, essentially pure nicotine, extracts composed predominantly of nicotine, or formulations composed predominantly of nicotine, are not incorporated within the liquid storage container **85** or elsewhere within the smoking article.

In another embodiment, the tobacco can be located within the smoking article **10** in a region that is physically separate from the cartridge **85**. For example, the tobacco can be positioned so as to abut the cartridge **85**, or positioned in a spaced apart relationship relative to the cartridge. As such, the tobacco is not mixed with the aerosol-forming mixture within the cartridge **85**. In one embodiment, a charge or roll of tobacco cut filler wrapped in paper (e.g., so as to provide a generally cylindrical charge of tobacco) can be positioned either upstream or downstream from the cartridge **85**. In another embodiment, tobacco-containing reconstituted tobacco sheet (e.g., a formed cast sheet or reconstituted tobacco paper) can be used as wrapping materials of various components (e.g., including the cartridge **85**) within the smoking article **10**. In another embodiment, tobacco cut filler can surround the cartridge **85** or other components located within the smoking article **10**. In another embodiment, tobacco extract can be carried by a substrate or positioned within a cartridge that is located within the smoking article **10** physically separate from the aforementioned cartridge **85** that contains the aerosol-forming material.

The number of puffs during the use of a single cartridge **85** can vary, depending upon factors such as the amount of aerosol-forming material, tobacco, and other associated components that is employed, the form of those components, the positioning of those components within the smoking article **10** relative to the resistance heating elements, and the like. The amount of those components can be sufficient to provide, for example, about 10 to about 15 puffs per cartridge, when that cartridge is employed within a smoking article and smoked under FTC smoking conditions. However, amount of those components can be sufficient to provide, for example, greater than about 200 puffs per cartridge, often greater than about 400 puffs per cartridge, and frequently greater than about 600 puffs per cartridge, when that cartridge is employed within a smoking article and smoked under FTC smoking conditions. For smoking articles employing cartridges containing sufficient components to provide a relatively large number of puffs, those smoking articles can be employed in conjunction with removable caps, or other suitable sealing means, in order that the smoking article can be sealed during periods of non-use. The smoking article **10** can be configured such that the cartridge **85** can be removed from the smoking article and replaced as needed.

The smoking article **10**, at its mouth-end **15**, possesses a mouth-end piece **120**. The mouth-end piece **120**, which is typically removable, can be maintained in place by friction fit, a threaded screw mechanism that cooperates with a complementing threaded mechanism that is secured to the outer container, or the like. A representative mouth-end piece can be of the type incorporated within a device available as Ruyan Atomizing Electronic Cigarette from Ruyan SBT Technology and Development Co., Ltd. Alternatively, the mouth-end piece **120** can have the form of other types of holders that have been proposed for use with smoking articles. See, also, for example, the types of mouth-end pieces and cigarette-type filter elements set forth in U.S. patent application Ser. No. 11/377,630 filed Mar. 16, 2006 to Crooks et al.

During use, the mouth-end **15** of the smoking article **10** is placed in the lips of the smoker. Air is drawn through the air passageways or openings **32** in the cap **35** located at the distal end **13** of the smoking article, and into the outer container **20**. Drawn air passes through air passageway **45** that extends along the length of the power source **36** and the electronic control components **50**, through an air passageway area within the first heating element **70**, through the air flow sensing region **60**, past or through the second heating element **72**, through air passageway **115** that extends along the length of the cartridge **85**, and into the mouth-end piece **120**. Typically, resistance heating elements provide surface region temperatures, and hence the ability to heat aerosol-forming materials and tobacco materials in surrounding regions in the vicinity of those heating elements. Typically, during relevant periods of use, those heating elements can provide surface region temperatures of at least about 200° C., and often at least about 300° C. Typically, those temperatures do not exceed about 600° C., often do not exceed about 500° C., and frequently do not exceed about 400° C. Aerosol that is formed by the action of drawn air passing heated tobacco components and aerosol-forming material in the region occupied by the second heating element **72** is drawn through the mouth-end piece **120**, and into the mouth of the smoker. That is, when used, the smoking article **10** yields visible mainstream aerosol that preferably resembles the mainstream tobacco smoke of traditional cigarettes that burn tobacco cut filler. The aerosol may also contain flavors and other components provided by, or derived from, tobacco.

Referring to FIG. **2**, another embodiment of a representative smoking article **10** is shown. The smoking article **10** has a rod-like shape, and includes a distal end **13** and a mouth-end **15**. The smoking article **10** possesses certain components comparable to, and in certain regards operates in a manner generally comparable to, that smoking article described previously with reference to FIG. **1**. However, the smoking article is adapted to incorporate a cigarette **150**.

RAI Exhibit 2009
Ecto World v. RAI Strategic
IPR2024-01280

An exemplary type of cigarette **150** possesses a charge or roll of tobacco **89** (e.g., tobacco cut filler or processed tobacco material) wrapped in wrapping material **160** (e.g., paper). The length of the resulting tobacco rod can vary; with a typical tobacco rod having a length of at least about 30 mm, often at least about 40 mm, while a typical tobacco rod has a length that does not exceed about 60 mm, and often does not exceed about 50 mm. The circumference of the tobacco rod can vary; with a typical tobacco rod having a circumference of about 20 mm to about 35 mm, and often about 25 mm to about 30 mm. Depending upon factors such as the ingredients incorporated within the cigarette **150**, the number of puffs of aerosol per cigarette than are expected, the configuration of the holder into which the cigarette is inserted, the amount of heat generated by the resistance heating element, and the like, the physical dimensions of the cigarette can be smaller than those of conventional, commercially available cigarettes that burn tobacco. Typically, the wrapping material **160** is wrapped around the tobacco **89** so as to form a generally cylindrical rod-shaped cigarette rod or tobacco rod. That is, the wrapping material **160** is formed into a generally tubular shape, and the tobacco is positioned within the hollow region within that tube. Preferably, the wrapping material **160** is formed such that each end of the tobacco rod is open to expose the tobacco contained therein, and to allow the passage of drawn air therethrough.

The wrapping material **160** can vary. The wrapping material **160** can be a paper wrapping material of the type traditionally used for cigarette manufacture. The wrapping material **160** also can be composed of a laminate of metallic foil and paper, and as such, heat generated by the second heating element can heat the metallic foil of the laminate and hence heat the tobacco contained within that laminate. See, for example, the types of wrapping materials, wrapping material laminates and wrapping material configurations set forth U.S. patent application Ser. No. 11/377,630 filed Mar. 16, 2006 to Crooks et al.

For the embodiment shown, the cigarette **150** possesses a type of cartridge **85** at its distal end within the wrapping material **160** and in fluid communication with the tobacco rod. That optional cartridge **85** contains an aerosol-generating material composition **101** therein. The components of the composition **101** can include a substrate material (e.g., polyethylene terephthalate fibers) that can be mixed or blended with tobacco filler. Typically, the substrate materials act as carriers for tobacco components and other aerosol-forming materials that can be delivered to the mouth of the smoker. The cartridge **85** can have a generally tubular shape with open ends such that air may flow therethrough. Cartridges can be manufactured from a variety of materials, such as paper or plastic, or heat conductive materials (e.g., metal foil, metal mesh or screen, ceramic non-woven web, or the like). Typically, when present, the length of the cartridge **85** does not exceed about 30 mm, and often does not exceed about 20 mm. Typically, when present, the cartridge **85** has a length of at least about 5 mm, and often at least about 10 mm. Optionally, an air passageway or gap (not shown) can exist downstream from the cartridge **85**, or the cartridge **85** can abut the tobacco rod as shown in FIG. **2** such that some migration of material between the tobacco rod and the cartridge is possible. Such an air passageway, when present, typically has a length of up to about 10 mm.

In one embodiment, the cartridge **85** and/or the wrapping material **160** of the tobacco rod can be manufactured from materials that, to some degree, conduct electricity. As such, depending upon the positioning of the cigarette **150** within the smoking article **10**, the cartridge **85** and/or the wrapping material **160** can be in electrical contact with the electrical circuitry associated with the electrical resistance heating element **72**. As a result, it is possible that some degree of electrical resistance heating also can be provided by the cartridge **85** and/or the wrapping material **160**.

In one embodiment, the cartridge **85** can be virtually devoid or free of nicotine. For example, the cartridge **85** can contain aerosol-forming materials, non-tobacco flavoring agents, and optionally, tobacco (e.g., as pieces of tobacco or as an extract) that has been de-nicotinized (e.g., using de-nicotinization processes or by using tobaccos virtually devoid of nicotine). As such, visible aerosol or flavored visible aerosol that is produced solely using components incorporated within the container **85** possesses virtually no nicotine. Rather, nicotine provided to the smoker of the smoking article within the mainstream aerosol delivered by the smoking article is provided by action upon tobacco **89** located in another region of the smoking article **10** rather than from nicotine incorporation within the cartridge **85**.

In one embodiment, the cartridge **85** can contain a gathered web of paper that incorporates carbon particles (e.g., about 10 to about 60 weight parts carbon and about 40 to about 90 weight parts wood pulp or flax fiber). See, for example, the types of carbon-containing papers set forth in U.S. Pat. No. 5,360,023 to Blakley et al., which is incorporated herein by reference. For example, a gathered sheet of carbon paper weighing about 40 mg, and having a length of about 10 mm to about 20 mm, can be saturated with a liquid mixture of glycerin, tobacco extract, and flavoring agent (e.g., with about 40 mg to about 120 mg of liquid mixture).

In a further embodiment, the cartridge **85** can contain a gathered web of paper that incorporates calcium carbonate particles (e.g., about 10 to about 40 weight parts calcium carbonate and about 60 to about 90 weight parts wood pulp or flax fiber). For example, a gathered sheet of carbon paper weighing about 40 mg, and having a length of about 10 mm to about 20 mm, can be saturated with a liquid mixture of glycerin, tobacco extract, and flavoring agent (e.g., with about 40 mg to about 100 mg of liquid mixture).

In yet another embodiment, the cartridge **85** can contain a fibrous carbonaceous material (e.g., graphite fibers). For example, a segment formed from about 40 mg to about 100 mg of those fibers, and having a length of about 10 mm to about 20 mm, can be saturated with a liquid mixture of glycerin, tobacco extract, and flavoring agent (e.g., in an amount of about 3 times of the dry weight of those fibers).

In a still further embodiment, the cartridge **85** can contain a reconstituted tobacco material (e.g., a cast sheet type material, an extruded material, or a paper-type reconstituted tobacco material) that incorporates particles or pieces of highly heat conductive materials (e.g., a matrix of aluminum wires, aluminum foil, copper wire, copper tubing, metal beads, or the like). Representative pieces or beads can have lengths, thicknesses or diameters of about 0.01 micrometers to about 1 mm. That material can act as a substrate for aerosol-forming material, tobacco extract, flavoring agents, and the like, and also can act as a conductor of heat produced by electrical resistance heating to regions within the cigarette **150**.

If desired, the region of the cigarette **150** that is wrapped in the paper wrapper **160** can be composed entirely of tobacco material, processed tobacco material, or a blend of tobacco material and other substrate material, and those materials is treated in such a manner so as to act as substrates for aerosol-forming materials. For such an embodiment, the previously described cartridge **85** is not incorporated within the cigarette **150**, and the components contained within the

RAI Exhibit 2009
Ecto World v. RAI Strategic
IPR2024-01280

wrapping material **160** are not necessarily positioned or arranged therein in a segmented fashion.

The cigarette **150** also can possess an optional filter element **200** located at the downstream end of the tobacco rod. The filter element can be composed of filter material **215** (e.g., cellulose acetate tow, gathered polypropylene web, plasticized cellulose acetate tube, or the like) wrapped in circumscribing plug wrap **218**. The filter element can be attached to the tobacco rod using a tipping material **222** that circumscribes the length of the filter element **200** and an adjacent region of the tobacco rod.

The mouth-end piece **120** of the smoking article **10** can be adapted to act as a support for the filter element **200** of the cigarette **150**, and can be removably attached to the outer housing **20** of the smoking article. That is, the mouth-end piece **120** can be removed from the outer housing **20** of the smoking article **10**, the filter element **200** of the cigarette **150** can be secured within the mouth-end piece (e.g., by friction fit), and the cigarette can be inserted into the downstream end of the outer housing. In such a circumstance, the mouth-end piece **120** can have a generally tubular shape. As such, the mouth-end piece can act as a type of support for the cigarette **120** while that cigarette is positioned within the outer housing **20** for use.

During use, the mouth-end **15** of the smoking article **10** is placed in the lips of the smoker. Air is drawn through the through the air passageways or openings **32** in the cap **35** located at the distal end **13** of the smoking article, and into the outer container **20**. Draw air passages through air passageway **45** that extends along the length of the power source **36** and the electronic control components **50**, through an air passageway area within the first optional heating element **70**, through the air flow sensing region **60**, past or through the second heating element **72**, through the cigarette **150** (including through cartridge **85**), and into the mouth-end piece **120**. Heat generated by the heating elements acting upon the tobacco and components thereof acts to volatilize components of the tobacco or otherwise cause components of tobacco to be entrained in drawn air. As such, the resulting aerosol incorporating tobacco components or tobacco-derived components is drawn into the mouth of the smoker. After use, the spent cigarette **150** is removed from the outer container **20** and disposed of, and when desired, a new cigarette is replaced within the outer container.

Referring to FIG. **3**, yet another embodiment of a representative smoking article **10** is shown. The smoking article possesses a distal end **13** and a mouth-end **15**. The smoking article **10** possesses certain components comparable to, and in certain regards operates in a manner generally comparable to, that smoking article described previously with reference to FIG. **1**. The smoking article **10** is adapted to incorporate a type of cigarette **150**. The tobacco segment **89**, circumscribed with a wrapping material **160**, can be provided so as to provide tobacco components or tobacco derived components by the action of heat. Components of the tobacco segment **89** can be treated (e.g., by contact with metal salts, moisture, or other suitable materials) in order that the tobacco (e.g., as cut filler, reconstituted tobacco sheet, or the like) that is subjected to heating by the action of the electrically generated heat exhibits desirable heat resistance, does not burn to an undesirable extent, experiences a controlled smolder, or the like. The tobacco segment **89** can also incorporate an aerosol-generating material. As shown, the cigarette **150** may include a filter element **200** as noted in connection with FIG. **2**.

The smoking article **10** possesses a third optional resistance heating element **300** that is powered by the power source **36**. The third resistance heating element is operated in essentially the same manner as the first and second resistance heating elements **70**, **72** that have been described previously with reference to FIG. **1**. As such, the third resistance heating element **300** is powered by the power source **36** and controlled by the electrically powered control components **50**, through suitable electrical connections, such as conductive wires, or the like (not shown). The third resistance heating element **300** can be provided by a suitable conductive material that can be suitably used as a resistance heating element, such as non-woven graphite yarn or web, ceramic material, metallic cloth or screen, metal alloy sheet, or the like. The physical size and shape of the third resistance heating element is such that the heating element can provide heat to at least a portion of the tobacco **89** of the cigarette **150**. For example, the third resistance heating element **300** can have the general shape of a tube that is adapted to fit snuggly around a portion of a tobacco rod **89** inserted therein. Alternatively, the third resistance heating element **300** can have a form so that aerosol-forming material and extracted tobacco components can be wicked from a tobacco substrate or a substrate paper material that is wrapped around that tobacco **89**. If desired, at least one of the resistance heating elements (e.g., the first and/or third resistance elements) can be equipped with a separate on/off timing mechanisms and/or switching mechanisms in order that the cigarette **150** can be pre-heated or heating can be otherwise controlled during certain desired periods of use of the smoking article **10**. In other words, each heating element can be selectively and separately controlled in certain embodiments. If desired, each of the heating elements can be arranged to have current pass therethrough (and hence provide heat) in response to a signal provided by response to the sensing mechanism component **60**. For example, each heating element can be turned "on" and "off" in response to a signal provided by response to the sensing mechanism **60**. Alternatively, current flow through the first heating element **70** can be controlled during periods of normal use of the smoking article **10**, and current flow through the second heating element **72** can be controlled only during periods of draw. Thus, each resistance heating element can provide differing amounts of heat, and can be operated to provide heat during differing periods.

Optionally, the size and shape of the second resistance heating element **72** can be altered. For example, as shown in FIG. **3**, at least a portion of the second resistance heating element can be elongated, and at least a portion thereof can extend downstream within the outer container **20**. As such, at least a portion of the second resistance heating element can extend into the tobacco segment **89**, and hence be in close contact with a significant amount of substrate and aerosol-forming material within the tobacco.

Preferably, a thermally insulated region **400** circumscribes the resistance heating element **300** of the smoking article **10** as shown, although the insulation can extend further down the smoking article and circumscribe, for example, the first and second heating elements as well. Representative types and configurations of insulation are set forth in U.S. patent application Ser. No. 11/194,215 filed Aug. 1, 2005, to Cantrell et al. and Ser. No. 11/377,630 filed Mar. 16, 2006 to Crooks et al. As such, there is provided a way to prevent the outer regions of the outer container **20** from becoming unduly hot to the touch during use of the smoking article **10**. In addition, a series of substantially non-permeable walls or like structural regions **420** can assist in ensuring that drawn air has a tendency to pass through the tobacco **89** during use of the smoking article **10**. The

RAI Exhibit 2009
Ecto World v. RAI Strategic
IPR2024-01280

insulating material **400** also can be positioned elsewhere within the smoking article **10**. For example, insulating material **400** can be used as a substrate material for tobacco extract, tobacco dust, aerosol-forming material, flavoring agent, and the like. In addition, insulating material **400** can be positioned at the locations or regions near the distal end **13** of the smoking article **10**, around the power source **36**, around the electronic and/or puff control components of the smoking article **10**, or elsewhere.

During use, the mouth-end **15** of the smoking article **10** is placed in the lips of the smoker. Air is drawn through the air passageways or openings **32** in the cap **35** located at the distal end **13** of the smoking article, and into the outer container **20**. Draw air passages through air passageway **45** that extends along the length of the power source **36** and the electronic control components **50**, through an air passageway area within the first heating element **70**, through the air flow sensing region **60**, past or through the second heating element **72**, through the cigarette **150**, and into the mouthend piece **120**. Heat generated by the three heating elements **70**, **72**, **300** acting upon the tobacco and components thereof act to volatilize components of the tobacco or otherwise cause components of tobacco to be entrained in drawn air. Typically, resistance heating elements provide surface region temperatures, and hence the ability to heat aerosol-forming materials and tobacco materials in surrounding regions in the vicinity of those heating elements. Typically, during relevant periods of use, those heating elements can provide surface region temperatures of at least about 200° C., and often at least about 300° C. Those temperatures typically do not exceed about 600° C., often do not exceed about 500° C., and frequently do not exceed about 400° C. As such, the resulting aerosol incorporating tobacco components or tobacco derived components is drawn into the mouth of the smoker. After use, the spent cigarette **150** is removed from the outer container **20** and disposed of, and when desired, a new cigarette is replaced within the outer container. Removal of the cigarette **150** can be accomplished by removing the mouthpiece **120**, which is typically removably attached to the outer housing **20**.

For all the embodiments described above, the selection of battery and resistance heating elements can vary, and can be a matter of design choice. For example, the battery voltage, amount of electrical current and resistance provided by the various resistance heating elements can be selected to provide sufficient power for initial heating (e.g., sufficient to provide virtually immediate aerosol formation and delivery of tobacco derived components upon draw), adequate heating of relevant components within the smoking article (i.e., sufficient heat to generate aerosol formation), adequate power source lifetime, and the like. Typically, the various components of the various control circuitry acts to ensure that current is controlled in order that resistance heating heats relevant components to a desired temperature or within a desired temperature range (i.e., a preferred smoking article does not overheat). Selection of the power source and resistance heating elements can be a matter of design choice, and will be readily apparent to one skilled in the art of design and manufacture of electrical resistance heating systems.

If desired, the smoking articles **10** of the present invention optionally can be air diluted. For smoking articles **10** that optionally are air diluted or ventilated, the amount or degree of air dilution or ventilation can vary. Frequently, the amount of air dilution for an air diluted cigarette is greater than about 10 percent, generally is greater than about 20 percent, often is greater than about 30 percent, and sometimes is greater than about 40 percent. Preferably, the upper level for air dilution for an air diluted cigarette is less than about 80 percent, and often is less than about 70 percent. As used herein, the term "air dilution" is the ratio (expressed as a percentage) of the volume of air drawn through the air dilution means to the total volume and air and aerosol drawn through the cigarette and exiting the mouth end portion of the cigarette. Higher air dilution levels can act to reduce the transfer efficiency of aerosol-forming material into mainstream aerosol.

Preferred smoking articles **10** of the present invention exhibit desirable resistance to draw. For example, an exemplary smoking article exhibits a pressure drop of between about 50 and about 200 mm water pressure drop at 17.5 cc/sec. air flow. Preferred smoking articles exhibit pressure drop values of between about 60 mm and about 180, more preferably between about 70 mm to about 150 mm, water pressure drop at 17.5 cc/sec. air flow. Preferably, pressure drop values of smoking articles are measured using a Filtrona Cigarette Test Station (CTS Series) available form Filtrona Instruments and Automation Ltd.

Aerosols that are produced by smoking articles of the present invention are those that comprise air-containing components such as vapors, gases, suspended particulates, and the like. Aerosol components can be generated by the action of heat upon tobacco of some form; and in certain circumstances, by thermally decomposing tobacco caused by heating tobacco, smoldering tobacco, and charring tobacco; and by vaporizing aerosol-forming agent. As such, the aerosol can contain volatilized components, combustion products (e.g., carbon dioxide and water), incomplete combustion products, and products of pyrolysis. Aerosol components may also be generated by the action of heat from burning tobacco of some form (and optionally other components that are burned to generate heat), upon substances that are located in a heat exchange relationship with tobacco material that is burned and other components that are burned. Aerosol components may also be generated by the aerosol generation system as a result of the action of heat of the heat generation system. Most preferably, components resulting from the aerosol generation system have an overall composition, and are positioned within the smoking article, such that those components have a tendency not to undergo a significant degree of thermal decomposition (e.g., as a result of combustion, smoldering or pyrolysis) during conditions of normal use.

Referring to FIG. **4**, there is shown a diagram of an embodiment of an electronic circuit **500** that can be incorporated within a smoking article of the present invention. The control circuitry for the smoking articles of the invention can be assembled as discrete electronic components or functionally as an integrated microprocessor device. The representative circuit includes a power source **36**, an actuation mechanism **510** (e.g., an actuation switch), and at least one resistance heating element; and for the embodiment shown, a first resistance heating element **70**, a second resistance heating element **72**, and a third resistance heating element **300**. Such a circuit that incorporates three resistance heating elements can be incorporated within the type of smoking article described previously with reference to FIG. **3**. It is noted that the circuit **500** of FIG. **4** can be readily adapted for use in a smoking article comprising two heating elements by simply removing the circuit pathways involving heating element **300**, and thus would be suitable for use in the embodiments of FIGS. **1** and **2**.

The actuation mechanism **510** typically is a switching mechanism that can be engaged by activity of the smoker. That is, such a switch can be activated by pressing or other

RAI Exhibit 2009
Ecto World v. RAI Strategic
IPR2024-01280

type of movement by the smoker using his/her finger, by activation by contact with the lips of the smoker, or by at least one other type of sensing mechanism located at an appropriate location on the smoking article. A representative switch can be manually operated by the smoker.

The circuit preferably incorporates a timing mechanism **520**. Such a timing mechanism can be programmed to provide for a controlled period of operation. For example, after the circuit has been activated by activity resulting in the switching of the current actuation mechanism **510** to an "on" position, the timing mechanism operates for a selected period of time (e.g., 1 minute, 2 minutes, 4 minutes, or the like). In the event that the remaining portion of the circuit is reactivated within the selected period of time, the timing mechanism **520** is reset and begins operating again. In the event of the occurrence a certain period of inactivity or non-use, the timing mechanism then can act to turn the circuit "off," until reactivation of the cycle.

During operation of the circuit, current passes through the first resistance heating element **70** and the third resistance heating element **300**, and as such, those resistance heating elements produce heat. Control of the temperatures generated by each resistance heating element is provided by control mechanisms **530**, **540**, respectively.

A puff control mechanism **550**, such as a suitable air flow sensing switch, acts to complete the circuit that provides current to the second resistance heating element **72**. That is, during periods of draw, the circuit that provides current through the second resistance heating element is closed, and hence that heating element produces heat. A predetermined quantity of heat can be produced by current controlled by a timer (e.g., a fixed pulse set at about 0.5 second to about 2 seconds in duration). Alternatively, a series of "on/off" types of pulses can be provided during draw periods. When draw is complete, that circuit is broken. A control mechanism **560**, such as a timer, acts to provide for control of the current passing through the circuit, and hence the amount of heat generated by heating element. For example, for longer puff periods, current supplied to the heating element, and hence power for aerosol generation, can be provided by a controlled sequential "on" and "off" signal provided by the timer. Typically, the timed period for current flow ranges from about 0.1 second to about 1 second, and about 0.2 second to about 0.6 second generally can be employed; while the "off" period for between periods of periodic current flow often can range from about 0.1 second to about 0.6 second.

Referring to FIG. **5**, there is shown a diagram of another embodiment of an electronic circuit **500** that can be incorporated within a smoking article of the present invention. It is again noted that the control circuitry for the smoking articles of the invention can be assembled as discrete electronic components or as an integrated microprocessor device. The representative circuit includes a power source **36**, an actuation mechanism **510**, and at least one resistance heating element; and for the embodiment shown, a first resistance heating element **70**, a second resistance heating element **72**, and a third resistance heating element **300**. Such a circuit that incorporates three resistance heating elements can be incorporated within the type of smoking article described previously with reference to FIG. **3**. Again, simply removing the third heating element **300** could produce a circuit useful in other smoking article embodiments set forth herein.

The circuit preferably incorporates a timing mechanism **520**. Such a timing mechanism can be programmed to provide for a controlled period of operation. For example, after the circuit has been activated by activity resulting in the switching of the current actuation mechanism **510** to an "on" position, the timing mechanism operates for a selected period of time. In the event that the remaining portion of the circuit is activated, the timing mechanism is reset and begins operating again. In the event of the occurrence a certain period of inactivity or non-use, the timing mechanism then can act to turn the circuit "off."

During operation, current passes through the first resistance heating element **70** and the third resistance heating element **300**, and as such, those resistance heating elements produce heat. Control of the temperatures generated by each resistance heating element is provided by control mechanisms **530**, **540**, respectively.

A puff control mechanism **590** acts to complete the circuit that provides current to the second resistance heating element **72**. That is, during periods of draw, the circuit that provides current through the second resistance heating element is closed, and hence that heating element produces heat. When draw is complete, that circuit is broken. In the embodiment shown, the puff control mechanism **590** is provided by a pressure sensor **570** and a threshold detector **580** (e.g., a Schmitt trigger), which can provide for control of the current passing through the second resistance heating element **72**, and hence for heat generation by heating element **72** that is proportional to the period and magnitude of the draw. For example, for longer puff periods, current supplied to the heating element **72**, and hence power for aerosol generation, can be provided for longer periods of time. As another example, for deeper or more rigorous puffs, a sensing of stronger draw can be used to provide for greater current flow to the appropriate resistance heating element, and hence provide for a correspondingly greater aerosol generation. Alternatively, a separate switch (not shown) can be selected by the smoker to provide control of current to at least one of the resistance heating elements; and as such, during periods of draw (e.g., whether or not the draw or puff is intense, long, short, deep, shallow, large in volume, small in volume, or the like) the conditions associated with heat generation for aerosol formation are controlled, and hence, consistent aerosol formation can be provided during each puff.

Many modifications and other embodiments of the invention will come to mind to one skilled in the art to which this invention pertains having the benefit of the teachings presented in the foregoing description; and it will be apparent to those skilled in the art that variations and modifications of the present invention can be made without departing from the scope or spirit of the invention. Therefore, it is to be understood that the invention is not to be limited to the specific embodiments disclosed and that modifications and other embodiments are intended to be included within the scope of the appended claims. Although specific terms are employed herein, they are used in a generic and descriptive sense only and not for purposes of limitation.

What is claimed is:

1. An electrically-powered, aerosol-generating smoking article comprising:

an outer housing having two ends;

a mouthpiece defined at one of the two ends;

an electrical power source arranged within the outer housing;

an electrical resistance heater positioned within the outer housing, the electrical resistance heater being configured for electrical connection with the electrical power source

RAI Exhibit 2009
Ecto World v. RAI Strategic
IPR2024-01280

a storage compartment defined within the outer housing, the storage compartment being configured for storage of a liquid aerosol-forming material and being arranged such that the liquid aerosol-forming material can be wicked into contact with the electrical resistance heater to volatilize the liquid aerosol-forming material;

an air passageway through at least a portion of the outer housing, the air passageway being arranged so that air drawn into the outer housing combines with volatilized liquid aerosol-forming material to produce an aerosol that can be drawn into the mouth of a user of the electrically-powered, aerosol-generating smoking article through the mouthpiece; and

a controller configured to activate current flow through the electrical resistance heater in response to a draw on the electrically-powered, aerosol-generating smoking article.

2. The electrically-powered, aerosol-generating smoking article of claim **1**, wherein the storage compartment is arranged within the housing proximate the mouthpiece.

3. The electrically-powered, aerosol-generating smoking article of claim **1**, wherein the storage compartment comprises a fibrous substrate.

4. The electrically-powered, aerosol-generating smoking article of claim **1**, wherein the aerosol that is produced passes at least partially through the storage compartment before exiting through the mouthpiece.

5. The electrically-powered, aerosol-generating smoking article of claim **1**, wherein the storage compartment is configured as a cartridge.

6. The electrically-powered, aerosol-generating smoking article of claim **5**, wherein the cartridge is circumscribed with a wrapping material.

7. The electrically-powered, aerosol-generating smoking article of claim **5**, wherein the cartridge comprises a plastic material.

8. The electrically-powered, aerosol-generating smoking article of claim **1**, wherein the storage compartment is configured as a container for holding liquid.

9. The electrically-powered, aerosol-generating smoking article of claim **1**, wherein the electrical resistance heater is arranged in contact with the storage compartment.

10. The electrically-powered, aerosol-generating smoking article of claim **1**, wherein the electrical resistance heater is arranged proximate to an absorbent wicking material configured for transferring the liquid aerosol-forming material to the electrical resistance heater.

11. The electrically-powered, aerosol-generating smoking article of claim **1**, wherein at least a portion of the electrical resistance heater extends into the storage compartment.

12. The electrically-powered, aerosol-generating smoking article of claim **1**, wherein the electrical resistance heater is configured to allow airflow therethrough.

13. The electrically-powered, aerosol-generating smoking article of claim **1**, further comprising a sensor adapted for sensing the draw by a user on the electrically-powered, aerosol-generating smoking article.

14. The electrically-powered, aerosol-generating smoking article of claim **1**, wherein the controller is configured to regulate the current flow through the electrical resistance heater during the draw on the electrically-powered, aerosol-generating smoking article.

15. The electrically-powered, aerosol-generating smoking article of claim **1**, further comprising an end cap defined at a second of the two ends.

16. The electrically-powered, aerosol-generating smoking article of claim **15**, wherein the electrical power source is arranged within the housing proximate the end cap.

17. The electrically-powered, aerosol-generating smoking article of claim **1**, wherein the electrically-powered, aerosol-generating smoking article is generally rod-shaped.

18. An electrically-powered, aerosol-generating smoking article comprising:

an outer housing;

an electrical power source arranged within the outer housing;

an electrical resistance heater positioned within the outer housing, the electrical resistance heater being configured for electrical connection with the electrical power source

a liquid storage arranged within the outer housing such that liquid aerosol-forming material in the liquid storage can be wicked into contact with the electrical resistance heater to volatilize the liquid aerosol-forming material;

an air passageway through at least a portion of the outer housing, the air passageway being arranged so that air drawn into the outer housing combines with volatilized liquid aerosol-forming material to produce an aerosol that can be drawn into the mouth of a user of the electrically-powered, aerosol-generating smoking article; and

a puff-actuated controller configured to regulate current flow through the electrical resistance heater in response to a draw on the electrically-powered, aerosol-generating smoking article.

19. The electrically-powered, aerosol-generating smoking article of claim **18**, wherein the puff-actuated controller comprises a sensor that senses the draw on the electrically-powered, aerosol-generating smoking article.

20. The electrically-powered, aerosol-generating smoking article of claim **18**, wherein the puff-actuated controller comprises additional control circuitry.

21. The electrically-powered, aerosol-generating smoking article of claim **18**, further comprising a mouthpiece attached to the outer housing.

22. The electrically-powered, aerosol-generating smoking article of claim **18**, wherein the liquid storage is configured as a container in which the liquid aerosol-forming material can be stored.

23. The electrically-powered, aerosol-generating smoking article of claim **18**, wherein the liquid storage is configured as an absorbent fibrous material.

24. The electrically-powered, aerosol-generating smoking article of claim **18**, wherein the aerosol that is produced passes at least partially through the storage before exiting through the electrically-powered, aerosol-generating smoking article.

25. The electrically-powered, aerosol-generating smoking article of claim **18**, wherein the electrical resistance heater is arranged in contact with the liquid storage.

26. The electrically-powered, aerosol-generating smoking article of claim **18**, wherein the electrical resistance heater is arranged proximate to an absorbent wicking material configured for transferring the liquid aerosol-forming material to the electrical resistance heater.

27. The electrically-powered, aerosol-generating smoking article of claim **18**, wherein at least a portion of the electrical resistance heater extends into the liquid storage.

28. The electrically-powered, aerosol-generating smoking article of claim **18**, wherein the electrical resistance heater is configured to allow airflow therethrough.

RAI Exhibit 2009
Ecto World v. RAI Strategic
IPR2024-01280

29. The electrically-powered, aerosol-generating smoking article of claim **18**, wherein the outer housing comprises a mouthpiece defined at a first end thereof and an end cap defined at a second end thereof.

30. The electrically-powered, aerosol-generating smoking article of claim **18**, wherein the electrically-powered, aerosol-generating smoking article is generally rod-shaped.

* * * * *

RAI Exhibit 2009
Ecto World v. RAI Strategic
IPR2024-01280

Exhibit 3

Contains Confidential Business Information Subject to Protective Order

Filed Under Seal

Exhibit 4

Contains Confidential Business Information Subject to Protective Order

Filed Under Seal

CERTIFICATE OF SERVICE

I, Savanna Tess, hereby certify that on December 2, 2024 copies of the foregoing have been served upon the following parties as indicated:

The Honorable Monica Bhattacharyya Administrative Law Judge **U.S. International Trade Commission** 500 E Street, SW Washington, DC 20436	Via Email: Bhattacharya337@usitc.gov
The Honorable Lisa R. Barton Secretary **U.S. International Trade Commission** 500 E Street, SW Washington, DC 20436	Via EDIS
Steve Shahida Vu Bui **Office of Unfair Import Investigations** **U.S. International Trade Commission** 500 E Street, SW Washington, DC 20436	Via Email: khashayar.shahida@usitc.gov Vu.Bui@usitc.gov

Patrick J. McCarthy Brian T. Burgess Andrew Kim Lori A. Gordon Amanda E. Stephenson Danielle Fong Ruchira De Jacqueline Odum **GOODWIN PROCTER LLP** 1900 N Street, N.W. Washington, D.C. 20036 Telephone: (202) 346-4000 Molly Grammel Kathleen McGuinness **GOODWIN PROCTER LLP** 100 Northern Avenue Boston, MA 02210 Telephone: (617) 570-1000	*Counsel for Respondents Breeze Smoke, LLC and Dongguan (Shenzhen) Shikai Technology Co., Ltd.* Via Email: DG-Breeze-ptnt-ITC@goodwinlaw.com

Sanjeet K. Dutta **GOODWIN PROCTER LLP** 601 Marshall St. Redwood City, CA 94063 Telephone: (650) 752-3100 Adam J. Horowitz **GOODWIN PROCTER LLP** The New York Times Building 620 Eighth Avenue New York, New York 10018-1405 Telephone: (212) 813-8800	
Eric Allen Zelepugas Andrew Himebaugh **THOMPSON HINE LLP** 20 North Clark Street, Suite 3200 Chicago, Illinois 60602-5093 Phone: (312) 998-4240 Eric N. Heyer Meixuan (Michelle) Li Joseph A. Smith **THOMPSON HINE LLP** 1919 M Street, NW Suite 700 Washington, DC 20036 Phone: (202) 331-8800 Marla R. Butler Clint King **THOMPSON HINE LLP** Two Alliance Center 3560 Lenox Road NE, Suite 1600 Atlanta, Georgia 30326 Phone: (404) 541-2900	*Counsel for Respondents Maduro Distributors, Inc. (d/b/a The Loon) and TheSy, LLC (d/b/a Element Vape)* *Co-Counsel for SV3, LLC (d/b/a Mi-One Brands)* Via Email: th-337-1410@thompsonhine.com

Daniel E. Yonan Uma N. Everett Kyle E. Conklin Kristina Caggiano Kelly Robert E. Niemeier Ryan C. Richardson **STERNE, KESSLER, GOLDSTEIN & FOX,** **P.L.L.C.** 1101 K Street, NW, 10th Floor Washington, DC 20005 Telephone: 202.371.2600 Eric N. Heyer Michelle Li Joe Smith **THOMPSON HINE LLP** 1919 M Street, N.W., Suite 700 Washington, D.C. 20036-3537 Telephone: 202.331.8800 Clint King **THOMPSON HINE LLP** 3560 Lenox Rd. NE, Suite 1600 Atlanta, Georgia 30326 Telephone: 404.407.3680 Eric A. Zelepugas **THOMPSON HINE LLP** 20 N. Clark Street, Suite 3200 Chicago, IL 60602-5093 Telephone: 312.998.4240 Steven E. Adkins **FISHERBROYLES, LLP** 1200 G Street N.W., Suite 800 Washington, DC 20005 Telephone: 202.669.9630	*Counsel for Respondent SV3 LLC d/b/a Mi-One Brands* Via Email: SV3-1410@sternekessler.com

Barbara A. Murphy David F. Nickel Susan Koegel Matthew N. Duescher **FOSTER, MURPHY, ALTMAN & NICKEL, PC** 1150 18th Street, N.W., Suite 775 Washington, D.C. 20036 Telephone: (202) 822-4100 Azim Chowdhury Eric P. Gotting **KELLER AND HECKMAN LLP** 1001 G Street NW, Suite 500 West Washington, DC 20001 Telephone: (202) 434-4269 Andrew Bochner Serge Krimnus Erick Robinson Meredith Lloyd **BOCHNER PLLC** 1040 Avenue of the Americas, 15th Floor New York, New York 10018 Telephone: (646) 971-0685	*Counsel for Respondents Pastel Cartel, LLC, American Vape Company, LLC, Affiliated Imports, LLC* Via Email: FM-Pastel-1410@fostermurphy.com Email: KH-1410-Patent@khlaw.com Email: BochnerPastelItc@bochner.law
Gary M. Hnath **MAYER BROWN LLP** 1999 K Street, NW Washington, DC 20006-1101 Telephone: (202) 263-3040 Alex Liang Hao Tan Shen Wang Peter J. Curtin **ARCH & LAKE LLP** 203 N LaSalle Street, Suite 2100 Chicago, IL, 60601 Telephone: (312) 558-1368	*Counsel for Shenzhen Han Technology Co., Ltd.* Via Email: SZ-HAN-AL-337-TA-1410@archlakelaw.com

Charles C. Carson T. Cy Walker Robert Hails, Jr. Elizabeth N. Sneitzer **BAKER & HOSTETLER LLP** 1050 Connecticut Avenue, NW, Suite 1100 Washington, D.C. 20036-5403 Telephone: (202) 861-1500 Scott A. Skiles **BAKER & HOSTETLER LLP** 312 Walnut Street, Suite 3200 Cincinnati, OH 45202-4074 Telephone: (513) 929-3400	*Counsel for Respondent Bidi Vapor, LLC.* Via Email: bidi@bakerlaw.com
P. Andrew Riley Lei Mei Laurence M. Sandell Robert A. Hall Edward Naidich Guang-Yu Zhu Jiwei Zhang **MEI & MARK LLP** 818 18th Street NW, Suite 410 Washington, DC 20006 Telephone: 888-860-5678	*Counsel for Respondents Zhuhai Qisitech Co., Ltd., Guangdong Qisitech Co., Ltd., Guangdong Fuwo Intelligent Manufacturing Co., Ltd., and Guangdong Cellular Workshop Electronics Technology Co., Ltd.* Via Email: MeiMark-ITC-1410@meimark.com
Joseph V. Colaianni **FISH & RICHARDSON P.C.** 1000 Maine Avenue, S.W., Suite 1000 Washington, D.C. 20024 Telephone: (202) 783-5070 Carl E. Bruce **FISH & RICHARDSON P.C.** 1717 Main Street, Suite 5000 Dallas, Texas 75201 Telephone: (214) 747-5070 Elizabeth G.H. Ranks **FISH & RICHARDSON P.C.** One Marina Park Drive, Suite 1700, Boston, MA 02210 Telephone: (617) 542-5070 Shawn Bastani Nicholas H. Wang	*Counsel for Respondent Shenzhen Kangvape Technology Co., LTD.* Via Email: SERVICEFishKangvapeReynoldsITC@fr.com

FISH & RICHARDSON P.C. 111 Congress Avenue, Suite 2000 Austin, TX 78701 Telephone: (512) 472-5070	
Jason Xu **RIMON PC** 1050 Connecticut Ave NW, Suite 500 Washington, DC 20036 (202) 470-2141 Eric C. Cohen **RIMON PC** P.O. Box B113 150 Fayetteville St, Suite 2800 Raleigh, NC 27601-2960 (984) 960-2860 Michael F. Heafey **RIMON PC** 800 Oak Grove Avenue, Suite 250 Menlo Park, CA 94025 (650) 461-4433 John Handy 1765 Greensboro Station Place Tower I Suite 900 McLean, VA 22102 (703) 559-7360	*Counsel for Respondent Shenzhen Pingray Technology Co., Ltd.* Via Email: SZPingray337-1410@rimonlaw.com *Counsel for Respondent Shenzhen Yanyang Technology Co., Ltd.* Via Email: SZYanYang337-1410@rimonlaw.com
Jason Xu **RIMON PC** 1050 Connecticut Ave NW, Suite 500 Washington, DC 20036 (202) 470-2141	*Counsel for Respondent Shenzhen IVPS Technology Co., Ltd.* Via Email: SZIVPS337-1410@rimonlaw.com
Erik J. Dykema, Esq. **BOCHNER PLLC** 1040 Avenue of the Americas, 15th Floor New York, New York 10018 (646) 971-0685 Andrew D. Bochner, Esq. **Bochner PLLC** 1040 Avenue of the Americas, 15th Floor New York, New York 10018 (646) 971-0685	*Counsel for Respondent Price Point Distributors Inc.* Via Email: ppd-itc@bochner.law

Erick Robinson, Esq. **BOCHNER PLLC** 1040 Avenue of the Americas, 15th Floor New York, New York 10018 (646) 971-0685 Serge Krimnus, Esq. **BOCHNER PLLC** 1040 Avenue of the Americas, 15th Floor New York, New York 10018 (646) 971-0685 Meredith R. Lloyd, Esq. **BOCHNER PLLC** 1040 Avenue of the Americas, 15th Floor New York, New York 10018 (646) 971-0685	

/s/ Savanna Tess
Savanna Tess