US011560707B2

(12) **United States Patent**
Tiramani et al.

(10) **Patent No.: US 11,560,707 B2**
(45) **Date of Patent: Jan. 24, 2023**

(54) **ENCLOSURE COMPONENT PERIMETER STRUCTURES**

(71) Applicant: **Build IP LLC**, Las Vegas, NV (US)

(72) Inventors: **Paolo Tiramani**, Las Vegas, NV (US); **Galiano Tiramani**, Las Vegas, NV (US); **Kyle Denman**, North Las Vegas, NV (US)

(73) Assignee: **Build IP LLC**, North Las Vegas, NV (US)

(*) Notice: Subject to any disclaimer, the term of this patent is extended or adjusted under 35 U.S.C. 154(b) by 157 days.

(21) Appl. No.: **16/786,202**

(22) Filed: **Feb. 10, 2020**

(65) **Prior Publication Data**

US 2020/0263412 A1 Aug. 20, 2020

Related U.S. Application Data

(60) Provisional application No. 62/960,991, filed on Jan. 14, 2020, provisional application No. 62/805,710, filed on Feb. 14, 2019.

(51) **Int. Cl.**
E04H 1/00 (2006.01)
E04B 1/344 (2006.01)
(Continued)

(52) **U.S. Cl.**
CPC ***E04B 1/344*** (2013.01); ***B32B 5/024*** (2013.01); ***B32B 5/18*** (2013.01); ***B32B 5/20*** (2013.01); ***B32B 5/245*** (2013.01); ***B32B 5/32*** (2013.01); ***B32B 15/046*** (2013.01); ***E04B 1/3442*** (2013.01); ***E04B 1/34357*** (2013.01); ***E04B 1/34384*** (2013.01); ***E04B 1/34853*** (2013.01);
(Continued)

(58) **Field of Classification Search**
CPC B32B 5/32; E04C 2/284; E04B 1/344
USPC 52/79.1
See application file for complete search history.

(56) **References Cited**

U.S. PATENT DOCUMENTS

1,498,173 A 6/1924 Kelley
2,063,052 A 12/1936 Washington
(Continued)

FOREIGN PATENT DOCUMENTS

AU 2013200386 A1 2/2013
CA 2227003 A1 7/1999
(Continued)

OTHER PUBLICATIONS

International Search Report and Written Opinion from related International Patent Application No. PCT/US2020/017527 dated Jun. 4, 2020.
(Continued)

Primary Examiner — Basil S Katcheves
(74) *Attorney, Agent, or Firm* — McCarter & English, LLP

(57) **ABSTRACT**

An enclosure member for a building structure comprising a planar laminate having a first facing layer; a layer of foam having a first face and a second opposing face; and a second facing layer; where the first facing layer is fastened to the first face of the layer of foam, and the second facing layer is fastened to the second opposing face of the layer of foam. An edge of the enclosure is provided with a perimeter structure that can perform one or more of a sealing function, an edge reinforcement function and a pivotable joining function with another enclosure, in accordance with the particular embodiment.

10 Claims, 32 Drawing Sheets

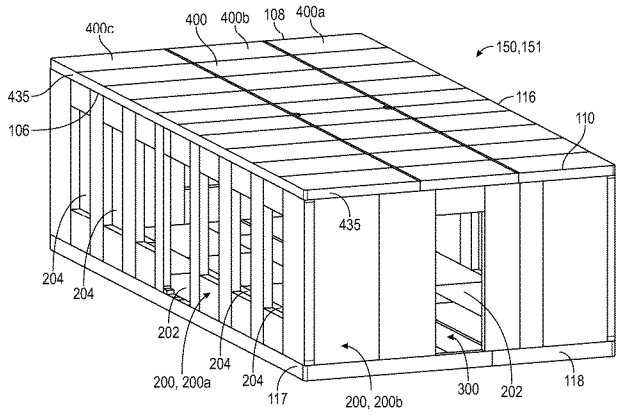

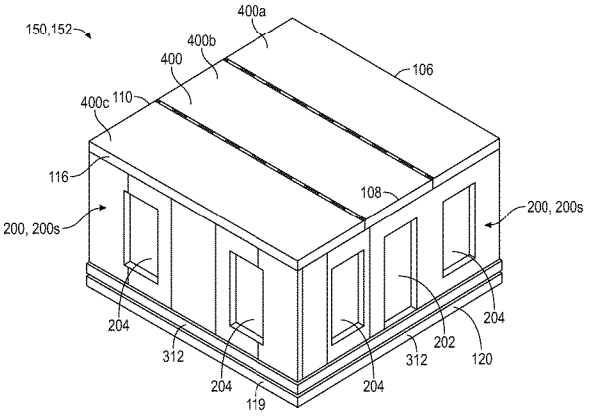

Columbia EX2027
Simpson Strong-Tie Company Inc. v. Columbia Insurance Company
PGR2024-00050
U.S. Patent No. 11,560,707

(51) **Int. Cl.**

E04C 2/284	(2006.01)
B32B 5/18	(2006.01)
B32B 5/32	(2006.01)
B32B 15/04	(2006.01)
B32B 5/02	(2006.01)
E04B 1/343	(2006.01)
B32B 5/20	(2006.01)
B32B 5/24	(2006.01)
E04B 1/348	(2006.01)

(52) **U.S. Cl.**

CPC ***E04C 2/284*** (2013.01); *B32B 2262/101* (2013.01); *B32B 2419/00* (2013.01); *E04B 2001/34389* (2013.01)

(56) **References Cited**

U.S. PATENT DOCUMENTS

2,070,924	A		2/1937	Derman
2,126,511	A		8/1938	Soule
2,302,101	A		11/1942	Boydstun
2,644,203	A		7/1953	Donahue
2,704,223	A		3/1955	Houdart
2,780,843	A		2/1957	Sherbinin
2,832,637	A		4/1958	Decosse
2,883,713	A		4/1959	Zug
2,904,849	A		9/1959	Bergstrom
2,904,850	A		9/1959	Whitman et al.
2,920,920	A		1/1960	Whitman et al.
2,933,055	A		4/1960	Whitman et al.
3,044,129	A		7/1962	Bigelow
3,097,400	A		7/1963	Davis et al.
3,107,116	A		10/1963	Weaker
3,147,024	A		9/1964	Brockman
3,280,796	A		10/1966	Hatcher
3,292,331	A		12/1966	Sams
3,305,993	A		2/1967	Nels
3,315,974	A		4/1967	Weaver et al.
3,324,831	A		6/1967	St. Onge
3,341,987	A		9/1967	Ragnhill
3,378,276	A		4/1968	Fulmer
3,465,488	A		9/1969	Miller
3,469,356	A		9/1969	White
3,497,231	A		2/1970	Fulmer et al.
3,550,334	A		12/1970	Van Der Lely
3,611,659	A		10/1971	Greenlaugh
3,624,786	A		11/1971	Lundahl
3,631,999	A		1/1972	Walerowski
3,694,977	A		10/1972	Verman
3,711,363	A		1/1973	Jarema et al.
3,712,007	A		1/1973	Kump
3,720,022	A		3/1973	Dattner
3,750,366	A		8/1973	Rich, Jr. et al.
3,793,796	A		2/1974	Hughes
3,828,502	A		8/1974	Carlsson
3,844,063	A		10/1974	Jackson
3,863,404	A		2/1975	Wahlquist
3,866,365	A		2/1975	Honigman
RE28,367	E		3/1975	Rich, Jr. et al.
3,983,665	A		10/1976	Burton
3,984,949	A		10/1976	Wahlquist
4,035,964	A		7/1977	Robinson
4,068,434	A		1/1978	Day et al.
4,074,475	A		2/1978	Wahlquist
4,118,901	A		10/1978	Johnson
4,155,204	A		5/1979	Prozinski
4,165,591	A		8/1979	Fitzgibbon
4,186,539	A	*	2/1980	Harmon E04B 1/6129 52/580
4,235,054	A		11/1980	Cable et al.
4,360,553	A		11/1982	Landheer
4,376,593	A		3/1983	Schaefer
4,415,184	A		11/1983	Stephenson et al.
4,441,286	A		4/1984	Skvaril
4,464,877	A		8/1984	Gebhardt et al.
4,534,141	A		8/1985	Fagnoni
4,567,699	A		2/1986	McClellan
4,570,959	A		2/1986	Grinwald
4,599,829	A		7/1986	DiMartino, Sr.
4,603,518	A		8/1986	Fennes
4,603,658	A		8/1986	Garnsey
4,633,626	A		1/1987	Freeman et al.
4,635,412	A		1/1987	Le Poittevin
4,641,468	A		2/1987	Slater
4,644,708	A		2/1987	Baudot et al.
4,674,250	A		6/1987	Altizer
4,689,924	A		9/1987	Jurgensen
4,744,182	A		5/1988	Shacket et al.
4,766,708	A		8/1988	Sing
4,779,514	A		10/1988	Prigmore et al.
4,780,996	A		11/1988	Julien, Jr.
4,856,244	A		8/1989	Clapp
4,890,437	A		1/1990	Quaile
4,891,919	A		1/1990	Palibroda
4,958,874	A		9/1990	Hegedus
4,958,974	A		9/1990	Schenk
4,989,379	A		2/1991	Suzuki
5,070,667	A		12/1991	Schulte
5,160,567	A		11/1992	Konicek et al.
5,185,973	A		2/1993	Oldani et al.
5,218,803	A		6/1993	Wright
5,265,394	A		11/1993	Gardner
5,345,730	A		9/1994	Jurgensen
5,461,832	A		10/1995	Smith
5,491,934	A		2/1996	Bigelow, Jr. et al.
5,497,593	A		3/1996	Riesberg
5,596,844	A		1/1997	Kalinowski
5,657,606	A		8/1997	Ressel et al.
5,664,388	A		9/1997	Chapman et al.
5,732,839	A		3/1998	Schimmang et al.
5,755,063	A		5/1998	Ohnishi et al.
5,761,854	A		6/1998	Johnson et al.
5,765,330	A		6/1998	Richard
5,845,441	A		12/1998	Swartz
5,867,963	A		2/1999	Hershey
5,899,037	A		5/1999	Josey
5,906,075	A		5/1999	Sowers
5,930,962	A		8/1999	Sokolean
5,950,373	A		9/1999	von Hoff et al.
5,966,956	A		10/1999	Morris et al.
6,003,278	A		12/1999	Weaver et al.
6,003,919	A		12/1999	Shook
6,047,519	A		4/2000	Bagn
6,054,194	A		4/2000	Kane
6,073,413	A		6/2000	Tongiatama
6,158,184	A		12/2000	Timmerman, Sr. et al.
6,185,898	B1		2/2001	Pratt
6,195,950	B1		3/2001	Harris
6,223,479	B1		5/2001	Stockli
6,231,706	B1		5/2001	Higaki et al.
6,244,016	B1		6/2001	Wolf
6,279,284	B1		8/2001	Moras
6,308,469	B1		10/2001	Leung
6,385,942	B1		5/2002	Grossman et al.
6,481,165	B1		11/2002	Romary et al.
6,481,172	B1		11/2002	Porter
6,625,937	B1		9/2003	Parker et al.
6,663,740	B2		12/2003	Yamasaki
6,745,531	B1		6/2004	Egan
6,925,761	B1		8/2005	De La Marche
6,941,718	B1		9/2005	diGirolamo et al.
6,959,514	B1		11/2005	Pingel
6,959,515	B1		11/2005	Beighton
6,983,567	B2		1/2006	Ciotti
6,996,947	B2		2/2006	Albora
6,997,495	B1		2/2006	Groezinger
7,299,596	B2		11/2007	Hildreth
7,326,022	B2		2/2008	Brown et al.
7,444,953	B1		11/2008	Player
7,740,257	B2		6/2010	Haire
7,828,367	B2		11/2010	Hickam et al.
7,841,136	B2		11/2010	Czyznikiewicz
7,882,659	B2		2/2011	Gyory et al.
7,930,857	B2		4/2011	Pope

(56) **References Cited**

U.S. PATENT DOCUMENTS

8,141,304	B2	3/2012	Shen et al.	
8,166,715	B2	5/2012	De Azambuja	
8,201,362	B2	6/2012	Alford et al.	
8,276,328	B2	10/2012	Pepin	
8,347,560	B2	1/2013	Gyory et al.	
8,474,194	B2	7/2013	Tiramani	
8,516,778	B1	8/2013	Wilkens	
8,733,029	B2	5/2014	Tiramani	
8,925,270	B2	1/2015	Grisolia et al.	
9,617,739	B2 *	4/2017	Krause	E04B 1/7645
D820,469	S	6/2018	Watson	
10,196,173	B2	2/2019	Tiramani	
10,661,835	B2	5/2020	Tiramani	
10,688,906	B2	6/2020	Tiramani et al.	
10,829,029	B2	11/2020	Tiramani et al.	
10,926,689	B2	2/2021	Tiramani et al.	
10,961,016	B2	3/2021	Tiramani	
11,007,921	B2	5/2021	Tiramani et al.	
11,066,832	B2 *	7/2021	Krause	E04B 2/7412
11,118,344	B2 *	9/2021	Tiramani	B32B 15/046
11,220,816	B2	1/2022	Tiramani et al.	
2001/0004820	A1	6/2001	Poliquin	
2002/0046514	A1	4/2002	Leung	
2002/0095896	A1 *	7/2002	Commins	E04B 1/10 52/483.1
2002/0179598	A1	12/2002	Kuhn	
2003/0009964	A1	1/2003	Trarup et al.	
2003/0051314	A1	3/2003	Jenks	
2003/0071426	A1	4/2003	Larouche	
2004/0108750	A1	6/2004	Park	
2004/0128930	A1	7/2004	Ohnishi	
2004/0139674	A1	7/2004	DiLorenzo	
2004/0148889	A1	8/2004	Bibee et al.	
2004/0177581	A1	9/2004	Starke	
2005/0055973	A1	3/2005	Hagen et al.	
2005/0066620	A1	3/2005	Albora	
2005/0076600	A1	4/2005	Moody et al.	
2005/0122014	A1	6/2005	Bucher et al.	
2005/0283371	A1	12/2005	Tiramani	
2006/0037256	A1	2/2006	Pryor	
2006/0070306	A1	4/2006	Lin	
2006/0137269	A1	6/2006	Di Lorenzo	
2006/0150573	A1	7/2006	Elliott et al.	
2006/0251851	A1	11/2006	Bowman	
2007/0051069	A1	3/2007	Grimes	
2007/0079573	A1	4/2007	Sarine et al.	
2007/0096473	A1	5/2007	Ortega	
2007/0144078	A1	6/2007	Frondelius	
2007/0170740	A1	7/2007	Di Franco	
2007/0209294	A1	9/2007	Harvey	
2007/0271857	A1	11/2007	Heather et al.	
2008/0066417	A1	3/2008	Orchard	
2008/0264463	A1	10/2008	Kim et al.	
2009/0014044	A1	1/2009	Hartman et al.	
2009/0139153	A1	6/2009	Hudson	
2009/0193734	A1	8/2009	Harig et al.	
2009/0217600	A1	9/2009	De Azambuja	
2009/0266006	A1	10/2009	Gyory et al.	
2009/0293395	A1 *	12/2009	Porter	E04B 7/04 52/579
2010/0012000	A1	1/2010	Gordon	
2010/0018130	A1	1/2010	Lopez et al.	
2010/0162636	A1	7/2010	Bonebrake	
2010/0192481	A1	8/2010	Shen et al.	
2010/0269419	A1	10/2010	Gyory et al.	
2011/0094167	A1	4/2011	Noiseux et al.	
2011/0126479	A1	6/2011	Alford et al.	
2011/0268916	A1	11/2011	Pardue, Jr.	
2011/0297675	A1	12/2011	Johnson et al.	
2012/0006369	A1	1/2012	Cantin et al.	
2012/0137610	A1	6/2012	Knight et al.	
2012/0240501	A1	9/2012	Spiegel	
2012/0255240	A1	10/2012	Shen	
2012/0317902	A1	12/2012	Kapteyn	
2013/0036688	A1 *	2/2013	Gosain	E04B 2/8647 52/220.1
2013/0067841	A1	3/2013	Grieco et al.	
2013/0081346	A1	4/2013	Kulprathipanja et al.	
2013/0232902	A1	9/2013	Mayer et al.	
2013/0263527	A1	10/2013	Barrett et al.	
2013/0269267	A1	10/2013	Tiramani	
2013/0283618	A1	10/2013	Wiliams	
2013/0305626	A1	11/2013	Strickland et al.	
2013/0326986	A1	12/2013	Krivtsov et al.	
2014/0001786	A1	1/2014	Cantin et al.	
2014/0033619	A1	2/2014	Merchant	
2014/0115991	A1	5/2014	Sievers et al.	
2014/0150352	A1	5/2014	Lee	
2014/0157710	A1 *	6/2014	Potter	E04C 2/284 52/582.1
2014/0202089	A1	7/2014	Nakajima et al.	
2014/0311051	A1	10/2014	Fagan	
2015/0007506	A1	1/2015	Wallance	
2015/0034634	A1	2/2015	Mullaney	
2015/0093535	A1	4/2015	Lambach et al.	
2015/0135623	A1	5/2015	Garrett et al.	
2015/0204068	A1	7/2015	Miller	
2015/0239221	A1 *	8/2015	Gillman	B32B 37/185 156/307.1
2015/0322668	A1 *	11/2015	Quinn	E02D 27/00 52/236.9
2015/0361653	A1	12/2015	Grant et al.	
2016/0059104	A1	3/2016	Monaco	
2016/0069062	A1	3/2016	Dynon	
2016/0069067	A1 *	3/2016	Ciuperca	E04C 2/34 52/309.8
2016/0138258	A1	5/2016	Schaffert et al.	
2016/0160501	A1	6/2016	Taraba et al.	
2016/0208479	A1 *	7/2016	Krause	E04F 13/0803
2016/0215508	A1	7/2016	Kimel	
2017/0030071	A1	2/2017	Sorensen et al.	
2017/0037637	A1	2/2017	Grisolia et al.	
2017/0145692	A1 *	5/2017	Zheng	B28B 5/028
2017/0146055	A1	5/2017	Lowrey	
2017/0268232	A1	9/2017	Renke et al.	
2017/0323780	A1	11/2017	Koga et al.	
2017/0342723	A1 *	11/2017	Krause	E04B 1/40
2017/0350114	A1	12/2017	Crozier	
2018/0016781	A1	1/2018	Fox et al.	
2018/0112394	A1	4/2018	Giles	
2018/0141134	A1	5/2018	Brigham	
2018/0148923	A1	5/2018	Bravo Valenzuela	
2018/0313074	A1	11/2018	Brown et al.	
2019/0024364	A1	1/2019	Lestini et al.	
2019/0056237	A1	2/2019	White et al.	
2019/0100908	A1	4/2019	Tiramani et al.	
2019/0128847	A1	5/2019	Humfeld et al.	
2019/0161964	A1	5/2019	Figueroa	
2019/0352515	A1	11/2019	Zoitos et al.	
2020/0002552	A1	1/2020	Song et al.	
2020/0123776	A1	4/2020	Leatherman et al.	
2020/0263412	A1	8/2020	Tiramani et al.	
2020/0263413	A1	8/2020	Tiramani et al.	
2020/0317880	A1	10/2020	Ruckdaeschel et al.	

FOREIGN PATENT DOCUMENTS

CA	2442403	A1	3/2005
CH	713912	A1	12/2018
CN	101249663	A	8/2008
CN	205935221	U	2/2017
CN	107012982	A	8/2017
CN	206957136	U	2/2018
CN	110000252	A	7/2019
CN	110273517	B	7/2020
CN	113423901	A	9/2021
CN	113454302	A	9/2021
DE	19800291	A1	7/1999
DE	19631647	C2	4/2000
EP	2000611	A2	12/2008
EP	2636807	A2	9/2013
EP	3059357	A1	8/2016

(56) **References Cited**

FOREIGN PATENT DOCUMENTS

FR	1484291	A	6/1967
FR	2652620	A1	4/1991
GB	2290567	A	1/1996
WO	86/04630	A1	8/1986
WO	1996013402	A1	5/1996
WO	1997013931	A1	4/1997
WO	2002066755	A1	8/2002
WO	2006056383	A1	1/2006
WO	2008067592	A1	6/2008
WO	2015155438	A1	10/2015
WO	2016074116	A1	5/2016
WO	2017182471	A1	10/2017
WO	2020167671	A2	8/2020
WO	2020167673	A1	8/2020
WO	2020167674	A1	8/2020

OTHER PUBLICATIONS

Thomas, Robert, MgO Board, igO Board, https://www.wconline.com/articles/85449-mgo-board, Oct. 31, 2007.
U.S. Appl. No. 17/527,520, filed Nov. 16, 2021, Tiramani et al.
U.S. Appl. No. 17/539,706, filed Dec. 1, 2021, Tiramani et al.
U.S. Appl. No. 17/513,176, filed Oct. 28, 2021, Tiramani et al.
U.S. Appl. No. 17/513,207, filed Oct. 28, 2021, Tiramani et al.
U.S. Appl. No. 17/513,266, filed Oct. 28, 2021, Tiramani et al.
U.S. Appl. No. 17/587,051, filed Jan. 28, 2022, Tiramani et al.
U.S. Appl. No. 17/504,883, filed Oct. 19, 2021, Tiramani et al.
U.S. Appl. No. 17/675,646, filed Feb. 18, 2022, Tiramani et al.
U.S. Appl. No. 17/675,653, filed Feb. 18, 2022, Tiramani et al.
U.S. Appl. No. 17/552,108, filed Dec. 15, 2021, Tiramani et al.
U.S. Appl. No. 17/569,962, filed Jan. 6, 2022, Tiramani et al.
U.S. Appl. No. 17/245,187, filed Apr. 20, 2021, Tiramani et al.
U.S. Appl. No. 16/143,598, filed Sep. 27, 2018, Paolo Tiramani et al.
U.S. Appl. No. 16/786,130, filed Feb. 10, 2020, Paolo Tiramani et al.
U.S. Appl. No. 16/786,315, filed Feb. 10, 2020, Paolo Tiramani et al.
U.S. Appl. No. 16/804,473, filed Feb. 28, 2020, Paolo Tiramani et al.
U.S. Appl. No. 15/931,768, filed May 14, 2020, Paolo Tiramani et al.
International Search Report and Written Opinion from related International Patent Application No. PCT/US2020/017528 dated May 1, 2020.
Moore, Tom, PE, "SIPs: An Engineer's Perspective," Powerpoint presented by the Structural Insulated Panel Association, 2018.
Video entitled, "Mega advanced Boxabl tech?", found at: https://www.facebook.com/boxabl/videos/660885174475648/(May 8, 2020).
Video entitled, "Mega advanced Boxabl tech?", found at: https://www.tiktok.com/@boxabl/video/6824523989658930437?is_copy_url=1&is_from_webapp=v1 (May 8, 2020).
Video entitled, "Sneak peek of some Boxabl parts being made in a fully automated steel processing . . . ," found at: https://www.facebook.com/boxabl/videos/1113135289041201/ (Apr. 30, 2020).
APA Product Guide—Structural Insulated Panels, printed 2018.
International Search Report and Written Opinion from related Int'l Patent Appl'n No. PCT/US2020/017524 dated Jul. 30, 2020.
International Search Report and Written Opinion from related Int'l Patent Appl'n No. PCT/US2021/061343 dated Feb. 9, 2022.
International Search Report and Written Opinion from related Int'l Patent Appl'n No. PCT/US2021/056415 dated Feb. 25, 2022.
International Search Report and Written Opinion from related Int'l Patent Appl'n No. PCT/US2021/058912 dated Feb. 24, 2022.
Picture from https://microshowcase.com/microdwell/minim-house/, believed available as submitted herewith by Apr. 27, 2020.
Structural Insulated Panels Association, "Designing With SIP's: Design Considerations", printed 2018.
European Search Report from related European patent application No. 18864413.2 dated May 19, 2021.
European Search Report from related European patent application No. 18863822.5 dated Jun. 28, 2021.
//topsider.com/floorF.html—believed available as submitted herewith by May 13, 2008.
Ching, Building Construction Illustrated (3d edition), Wall Systems 5.03, believed available as submitted herewith by Oct. 3, 2006.
BOCA 1999 (14th edition), p. 267, believed available as submitted herewith by Oct. 3, 2006.
Portion of www.thisoldhouse.com , believed available as submitted herewith by Aug. 2, 2006.
Pages 1 and 2 of //www.taunton.com/finehomebuilding/pages/h00023.asp , believed available as submitted herewith by Aug. 2, 2006.
Affidavit of Robert Delorenzo dated Oct. 3, 2006.
Decision on Appeal, Ex Parte Paolo Tiramani, Appeal 2010-008385, U.S. Appl. No. 10/653,523, dated Aug. 28, 2012.
L1019-Genuine-Parts-Flyer, attached—Air Springs, 2014.
Hendrickson—Trailer Air Springs—Hendrickson Genuine Parts, attached, believed available as submitted herewith by Nov. 7, 2018.
International Search Report & Written Opinion, dated Jan. 2, 2019, in PCT/US2018/053006. (15 Pages).
International Search Report & Written Opinion, dated Jan. 29, 2019 in corresponding PCT application No. PCT/US2018/053015.
Heavy Timbers, Structural Insulated Panels, SIPS, http://heavytimbers.com/sips.html. last viewe Oct. 31, 2018.
International Search Report and Written Opinion from related Int'l Patent Appl'n No. PCT/US2021/059440 dated Mar. 16, 2022.
International Search Report and Written Opinion from related Int'l Patent Appl'n No. PCT/US2022/014224 dated Apr. 25, 2022.
International Search Report and Written Opinion from related Int'l Patent Appl'n No. PCT/US2021/063581 dated May 3, 2022.
International Search Report and Written Opinion from related Int'l Patent Appl'n No. PCT/US2022/011415 dated May 24, 2022.
First Examination Report from related Chinese Patent Application No. 202080014606.4 dated Apr. 20, 2022.
First Examination Report from related Chinese Patent Application No. 202080014607.9 dated Mar. 24, 2022.
International Search Report and Written Opinion from related Int'l Patent Appl'n No. PCT/US2022/01699 dated Jul. 7, 2022.

* cited by examiner

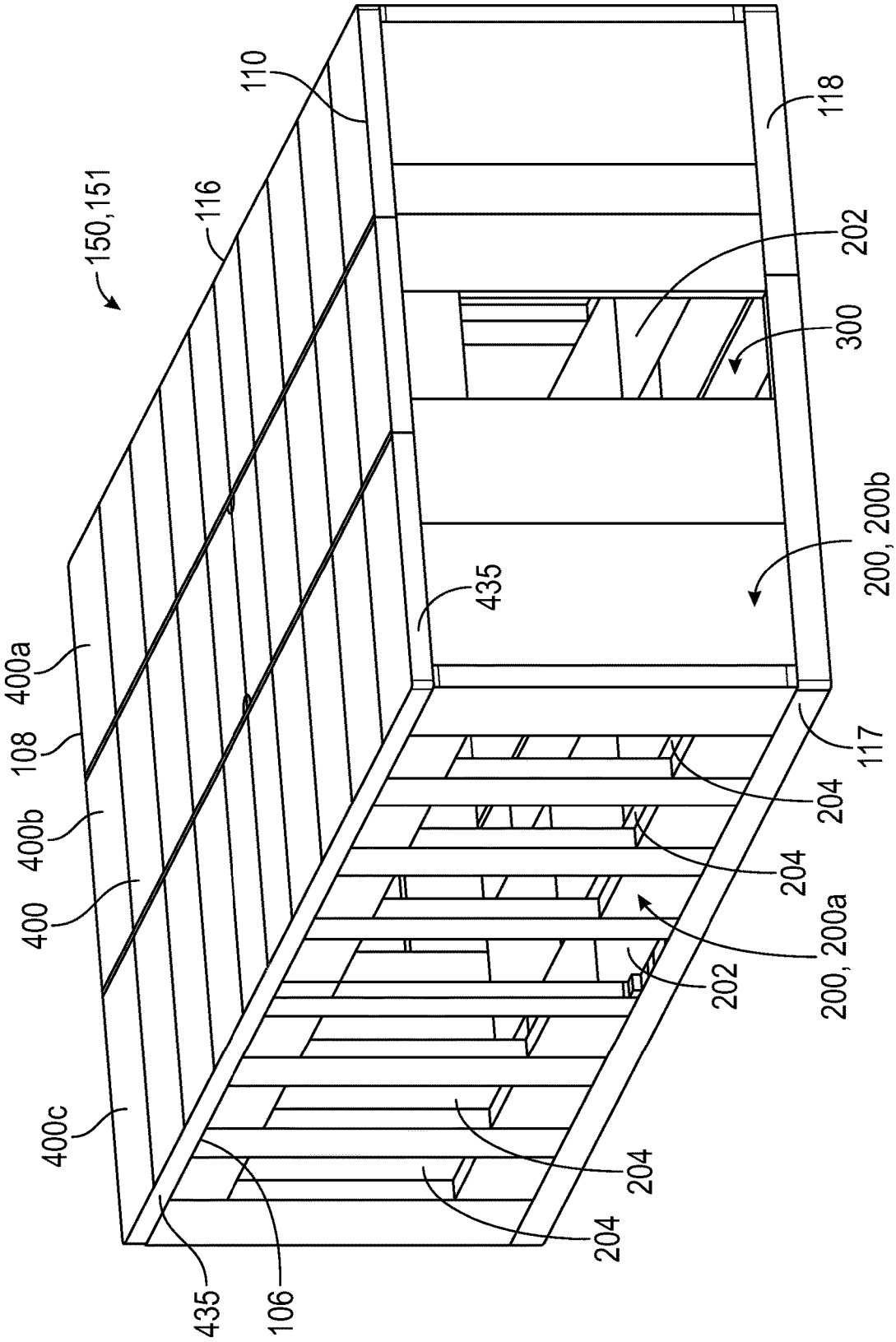
110
118
150,151
116
202
300
200, 200b
435
400a
108
400b
400
204
117
204
200, 200a
202
400c
204
204
435
106

Figure 1A

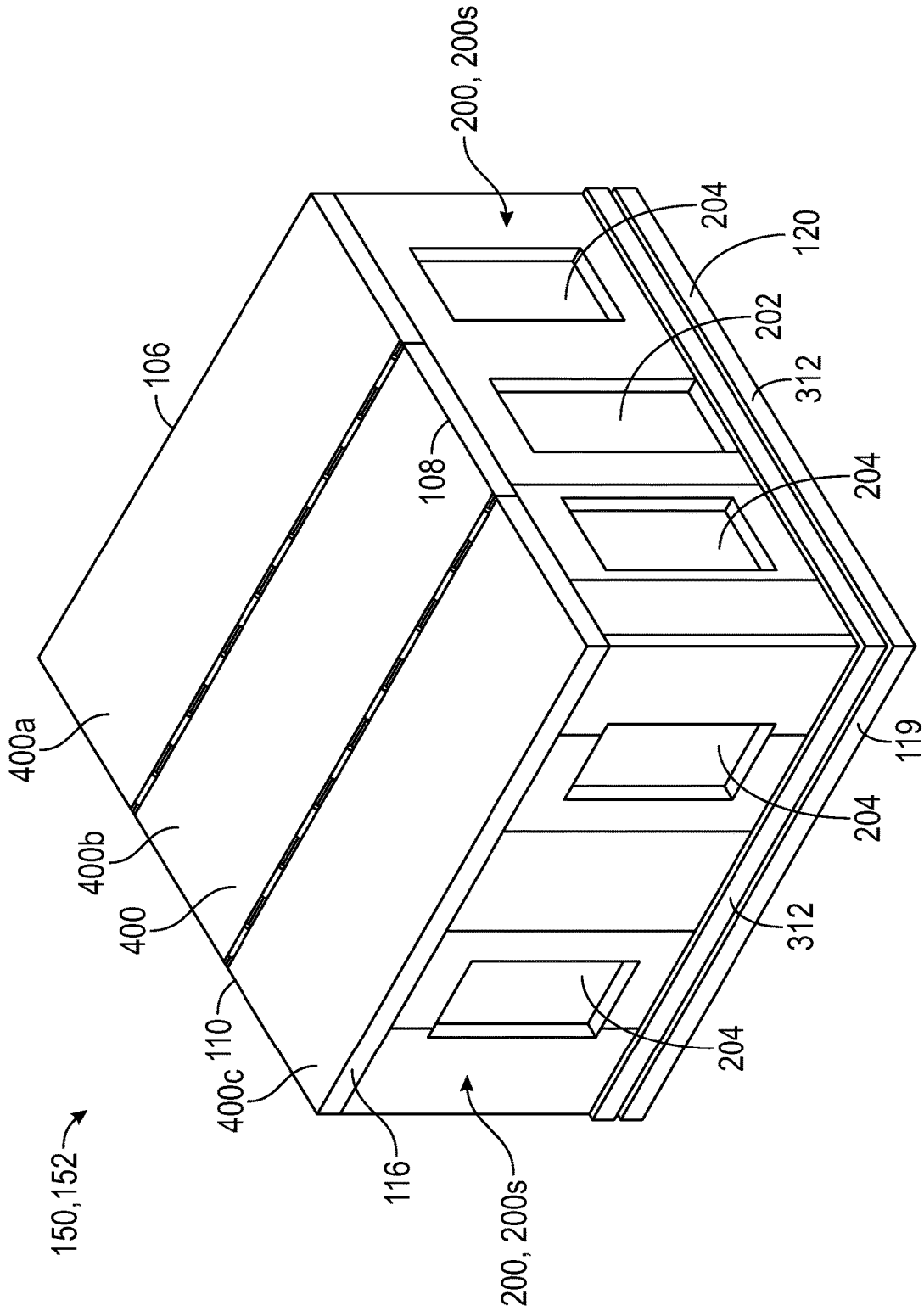
200, 200s
204
120
202
312
106
108
204
400a
400b
400
110
400c
204
312
204
119
150,152
116
200, 200s

Figure 1B

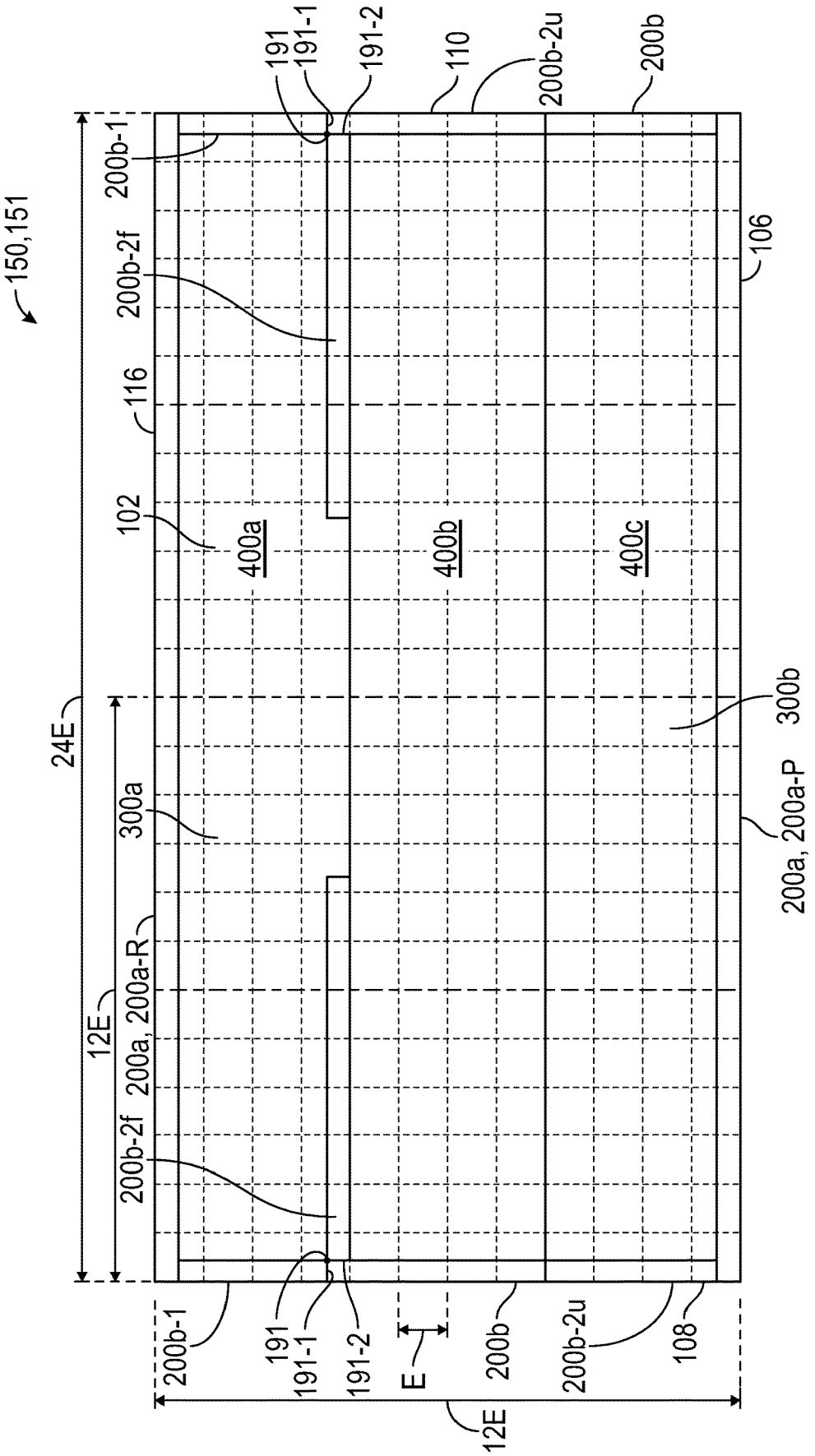
150,151
191
191-1
191-2
110
200b-2u
200b
200b-1
200b-2f
106
116
102
400a
400b
400c
24E
300b
300a
200a, 200a-P
12E
200a, 200a-R
200b-2f
200b-1
191
191-1
191-2
E
200b
200b-2u
108
12E

Figure 2A

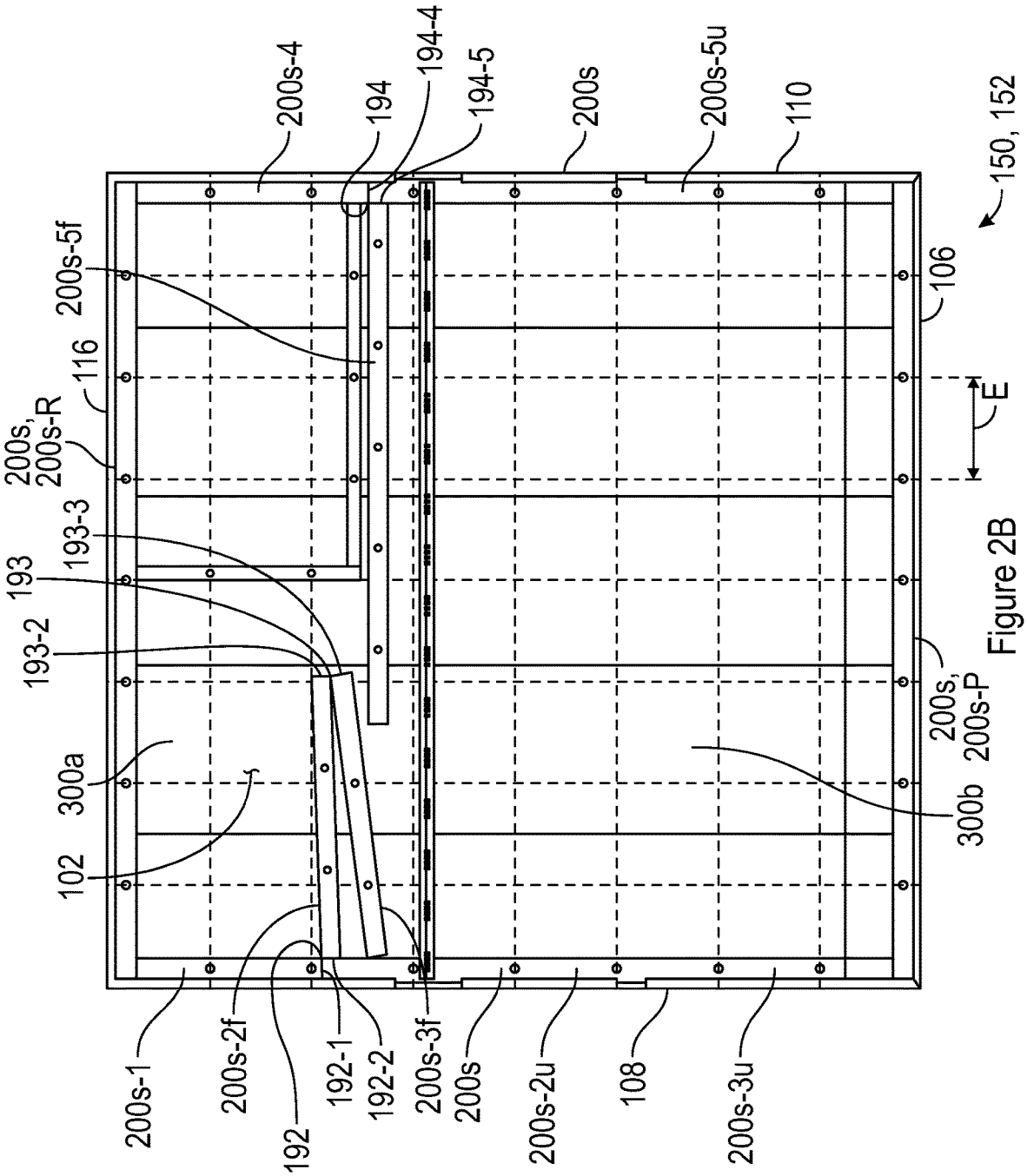
200s-4
194
194-4
194-5
200s
200s-5u
110
150, 152
200s-5f
116
106
200s,
200s-R
E
193-3
193
193-2
200s,
200s-P
300a
300b
102
200s-1
200s-2f
192
192-1
192-2
200s-3f
200s
200s-2u
108
200s-3u

Figure 2B

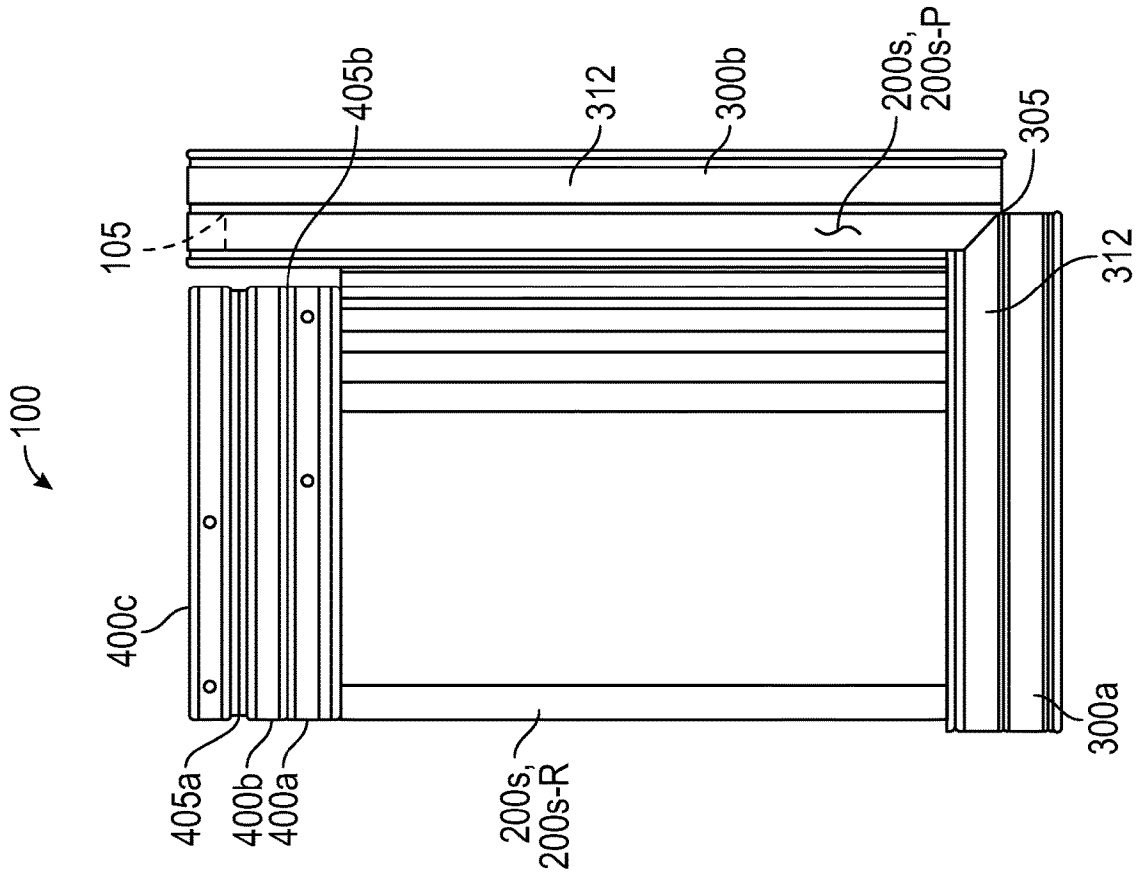

Figure 3B

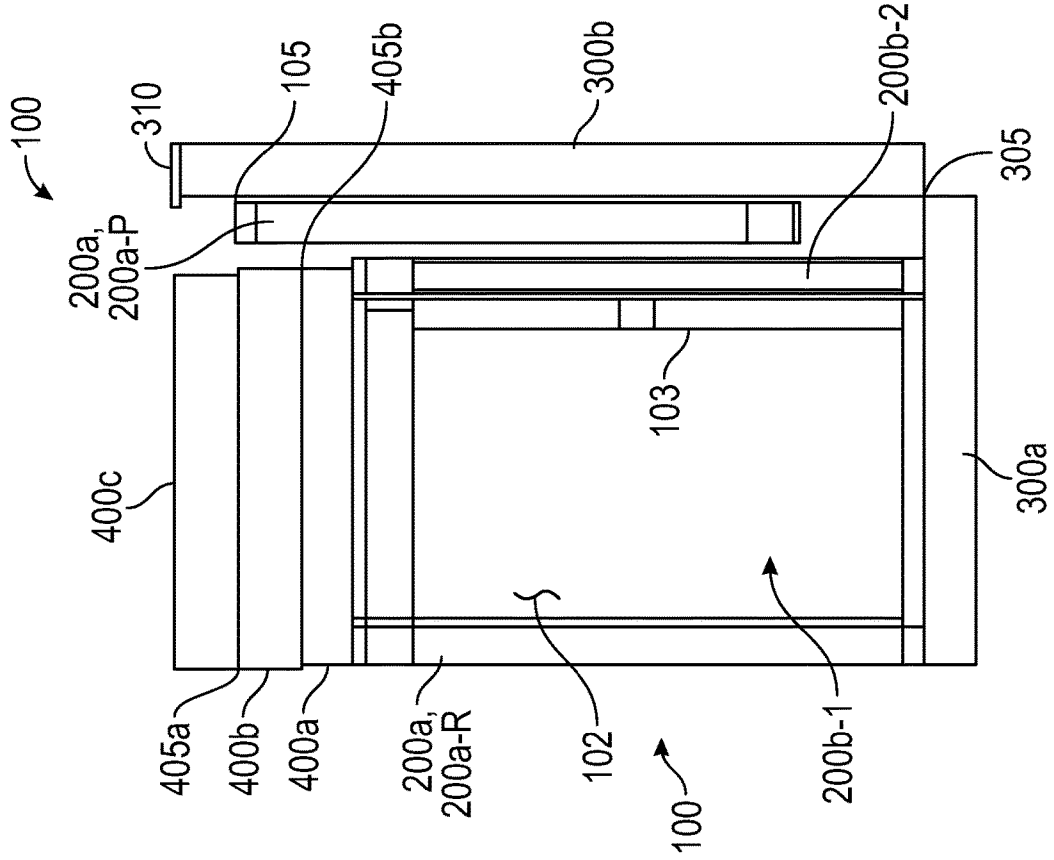

Figure 3A

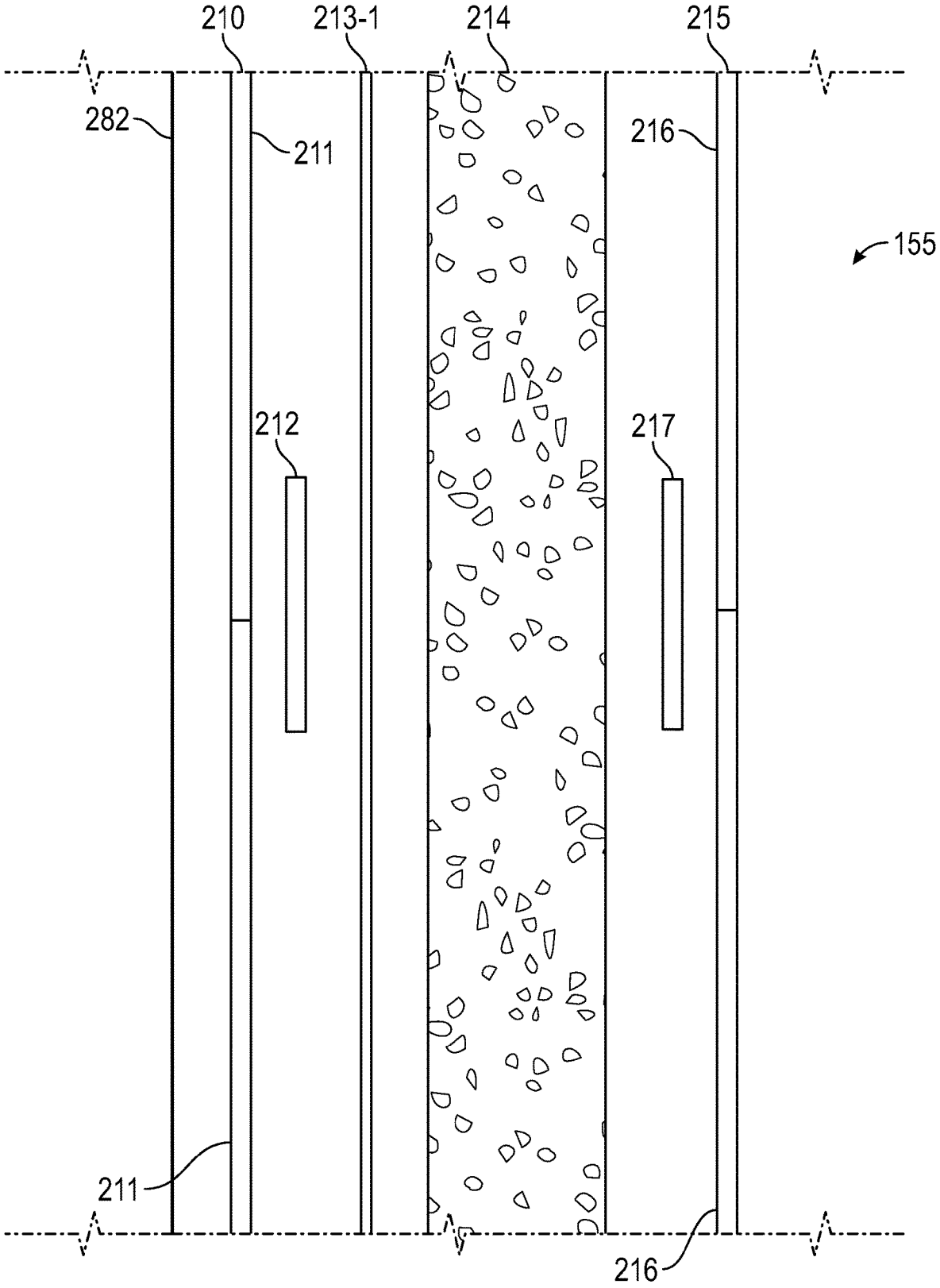

Figure 4A

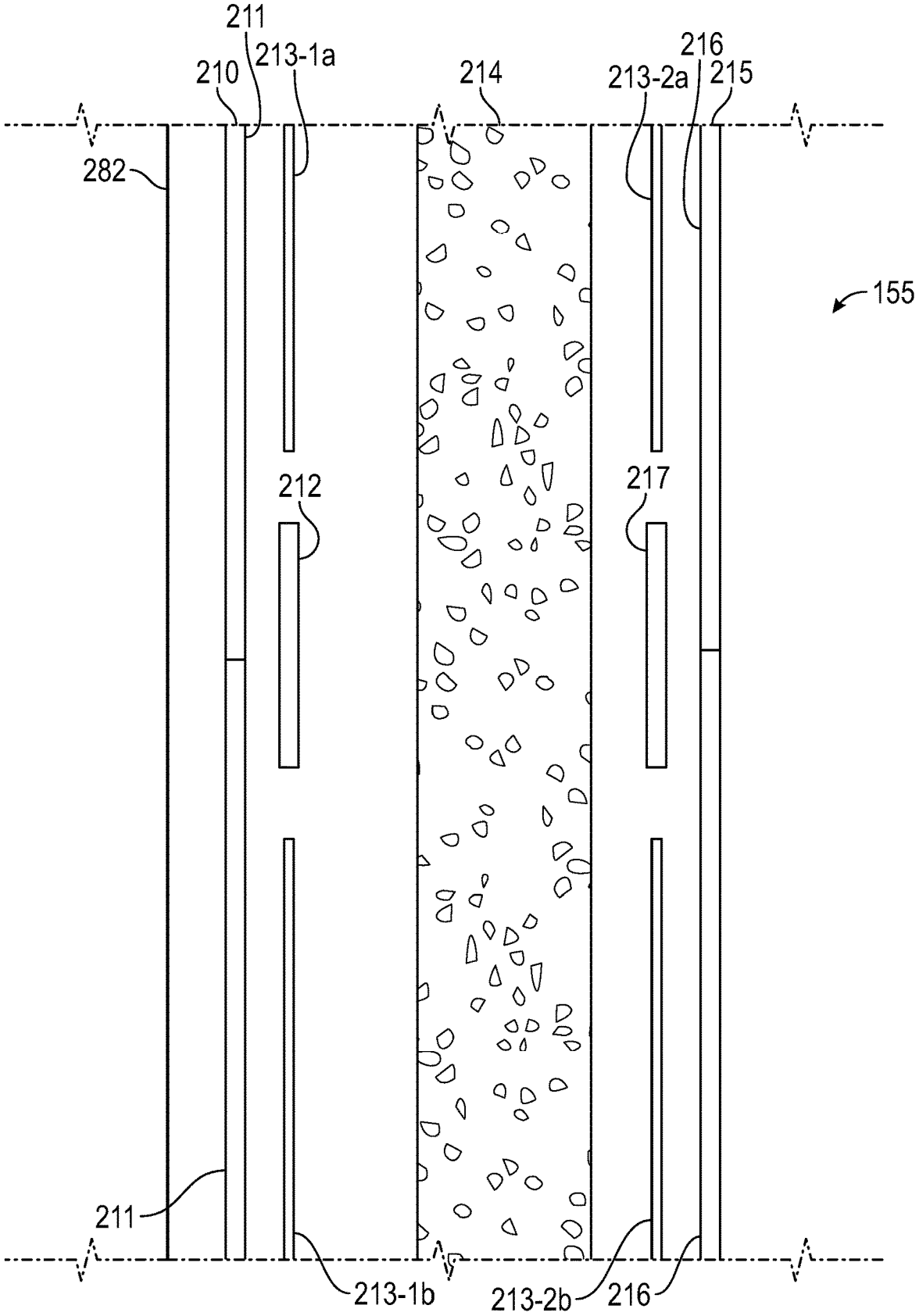
211
213-1a
210
214
213-2a
216
215
282
155
212
217
211
213-1b
213-2b
216

Figure 4B

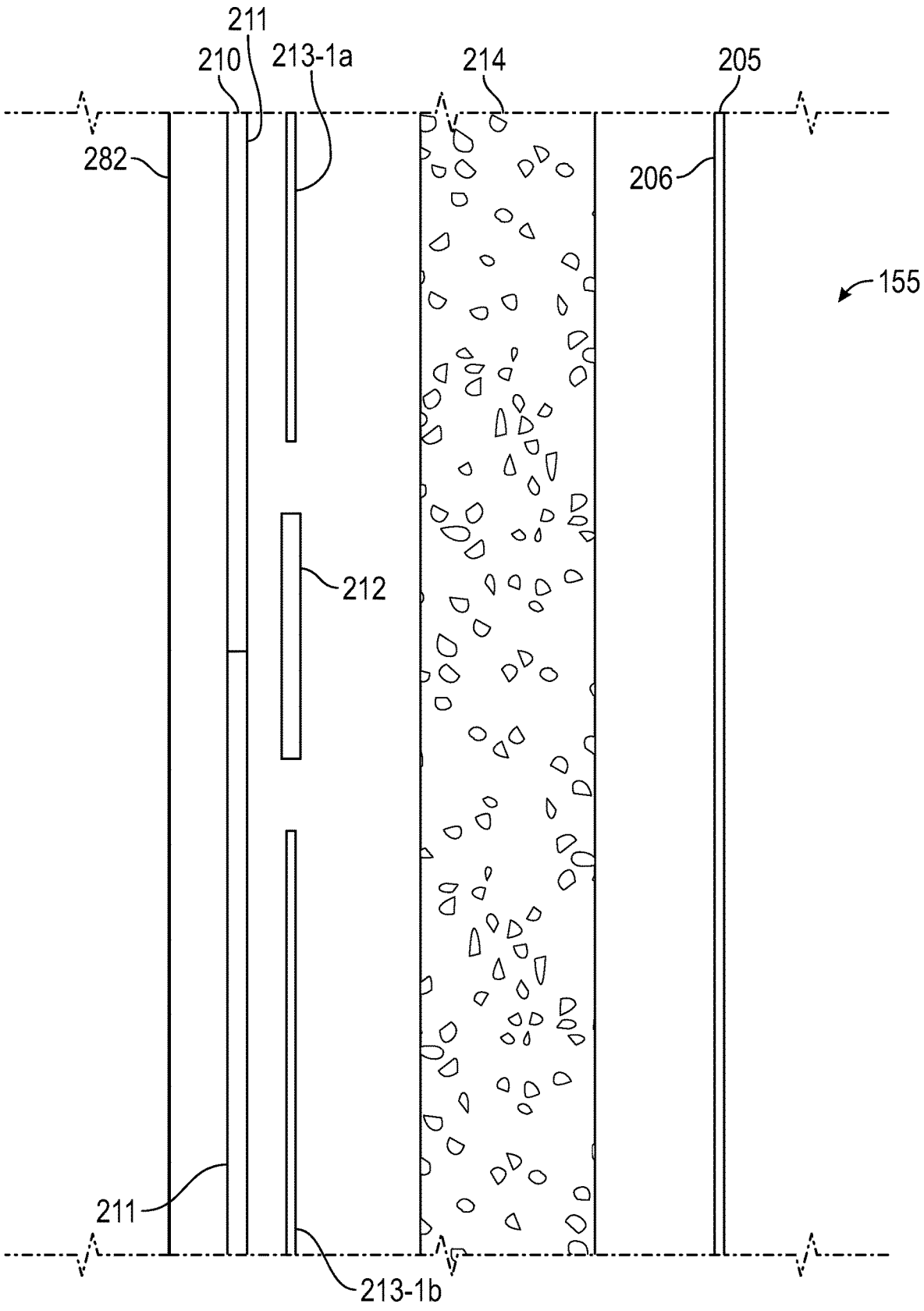

Figure 4C

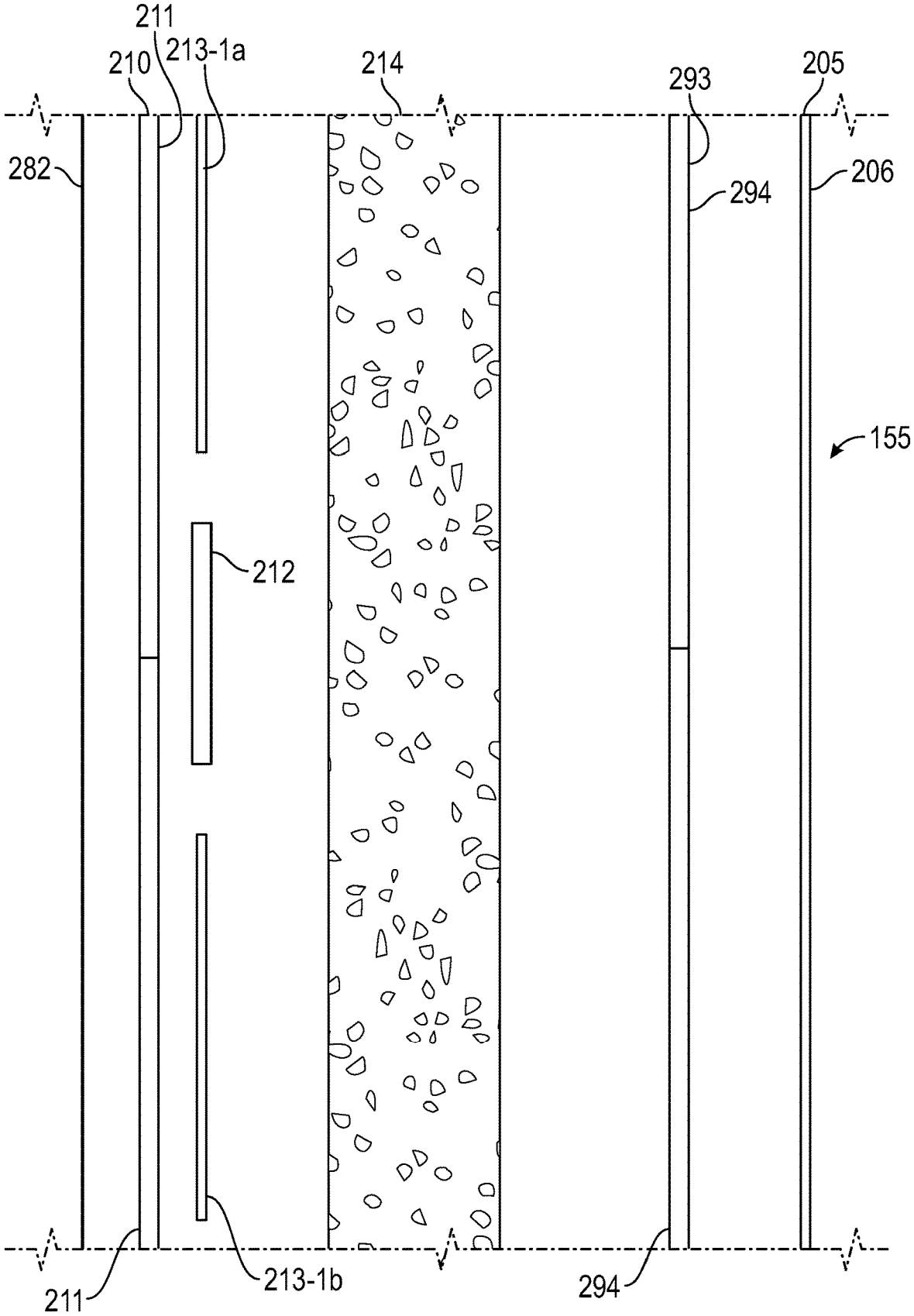

Figure 4D

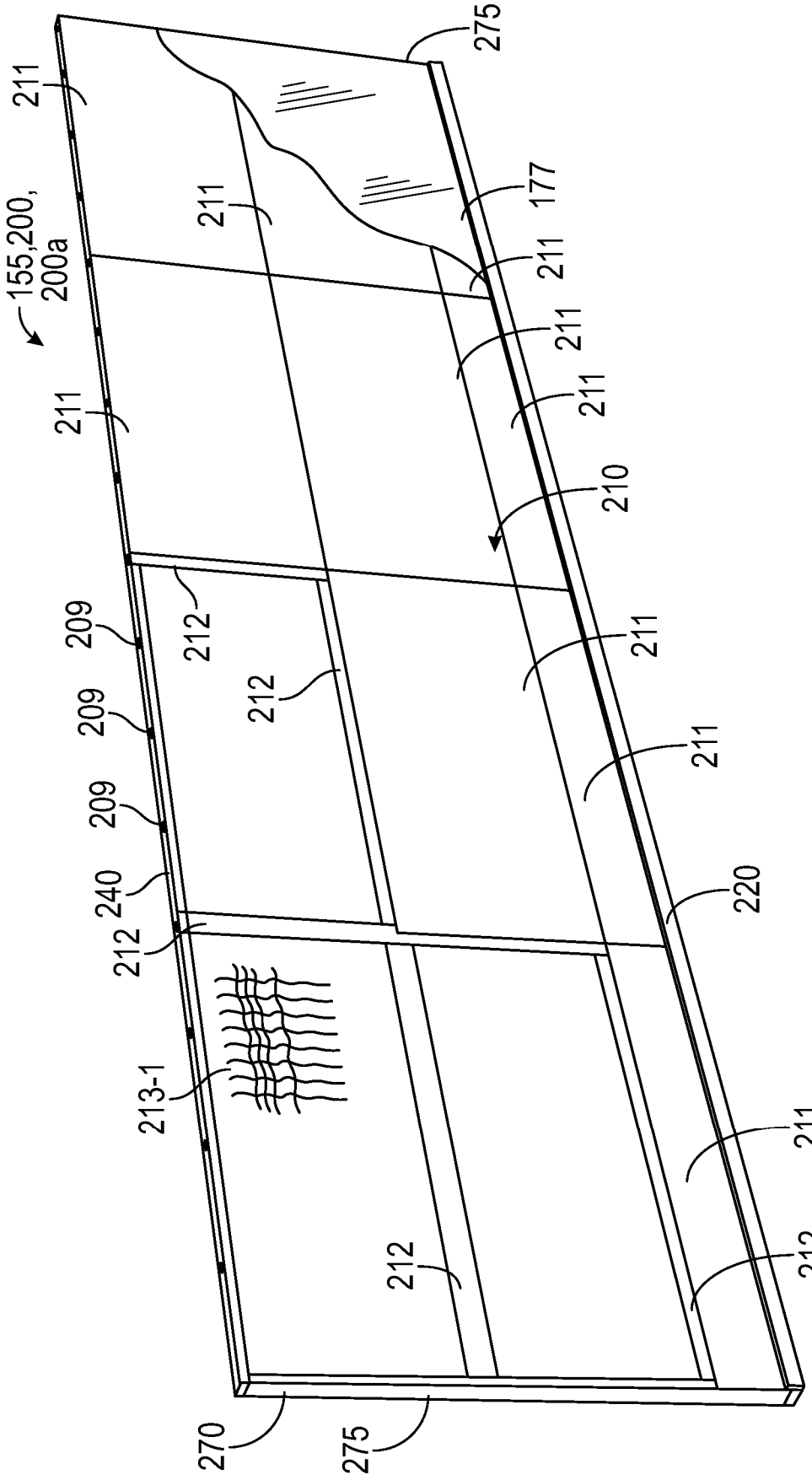
275
211
155,200,
200a
211
177
211
211
211
211
210
209
212
212
211
209
211
209
240
220
212
213-1
211
212
212
270
275

Figure 5A

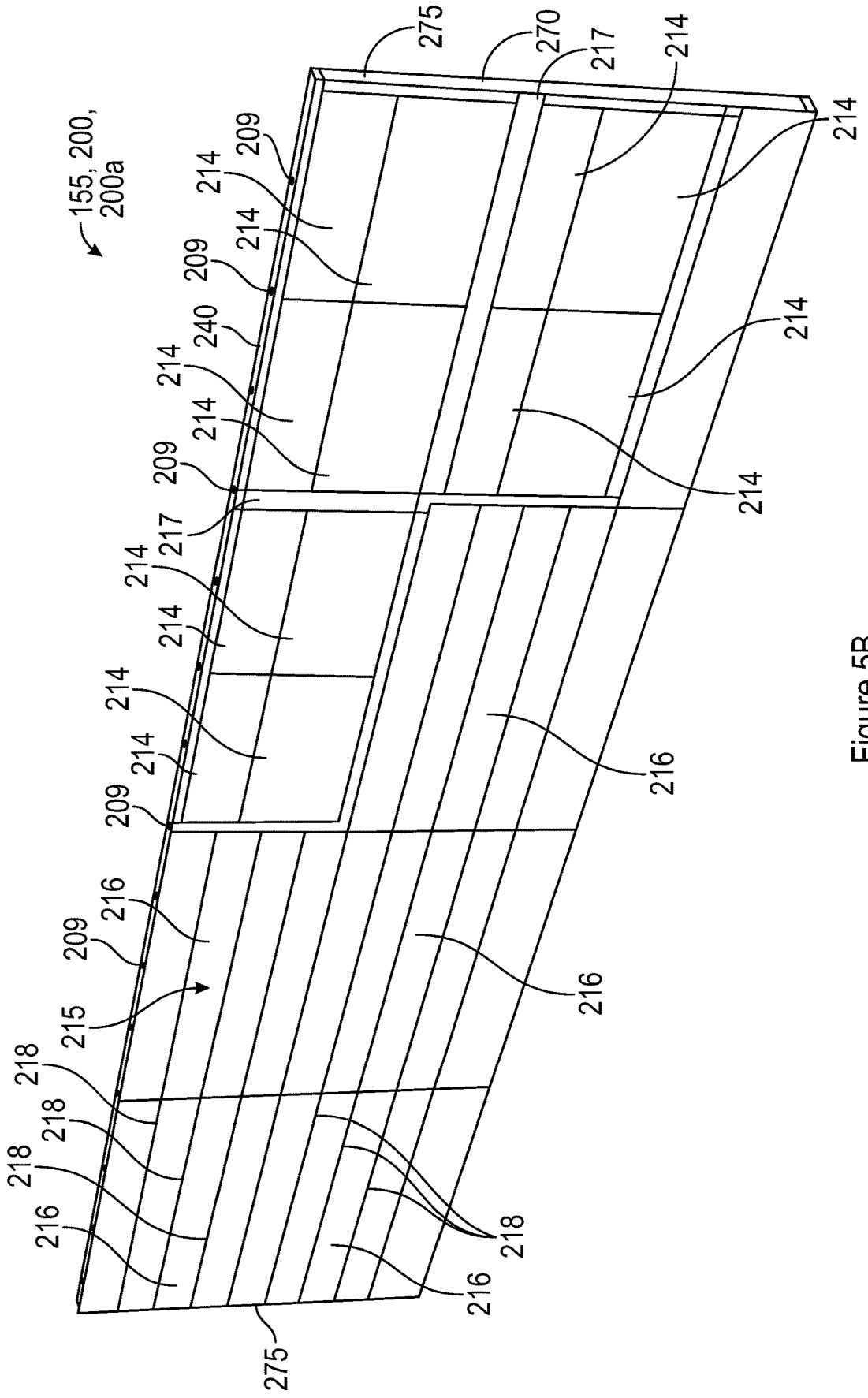

Figure 5B

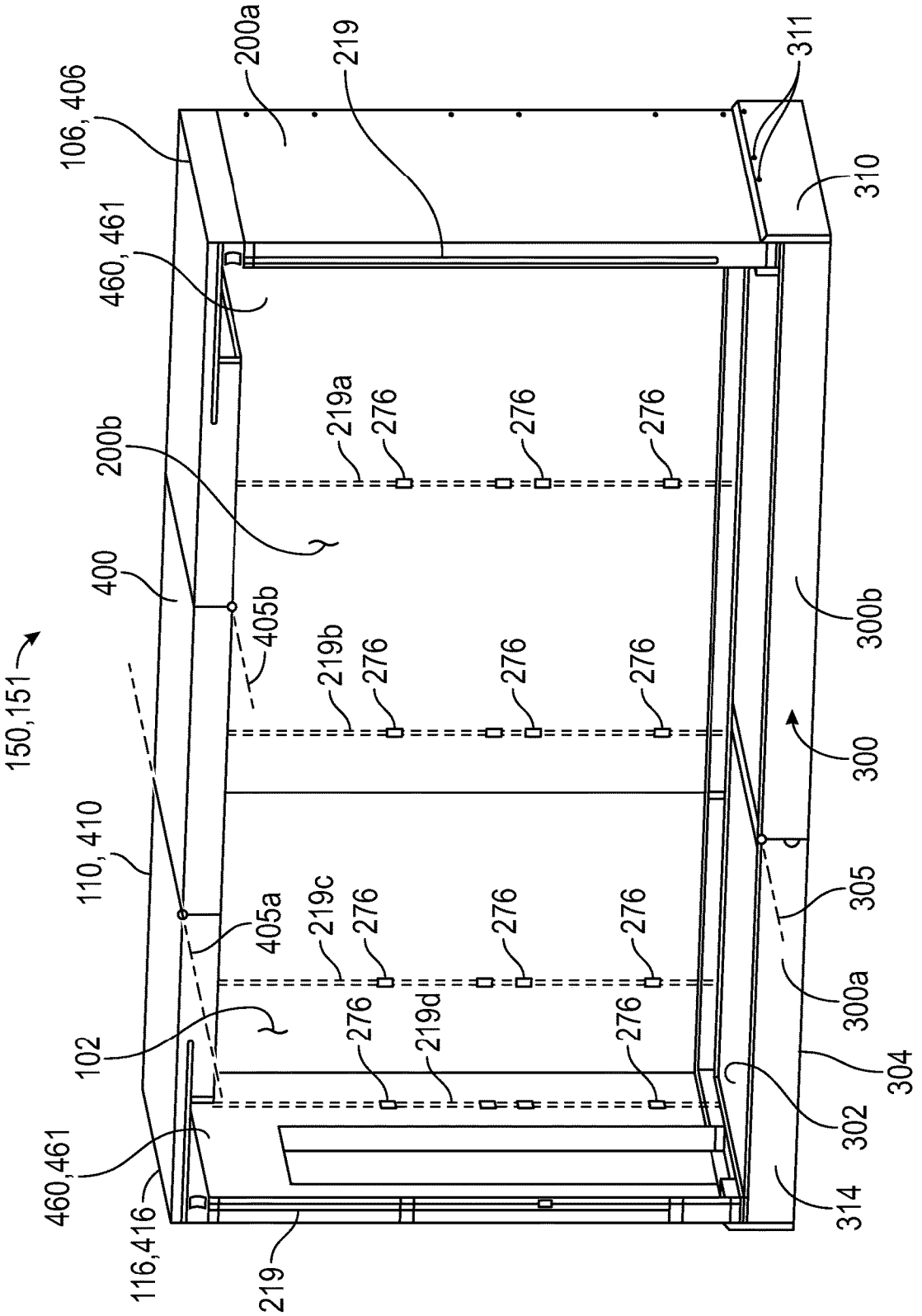
106, 406
200a
219
311
310
460, 461
219a
276
200b
400
405b
219b
300b
150,151
300
110, 410
305
405a
219c
300a
102
219d
304
460,461
302
314
116,416
219

Figure 6A

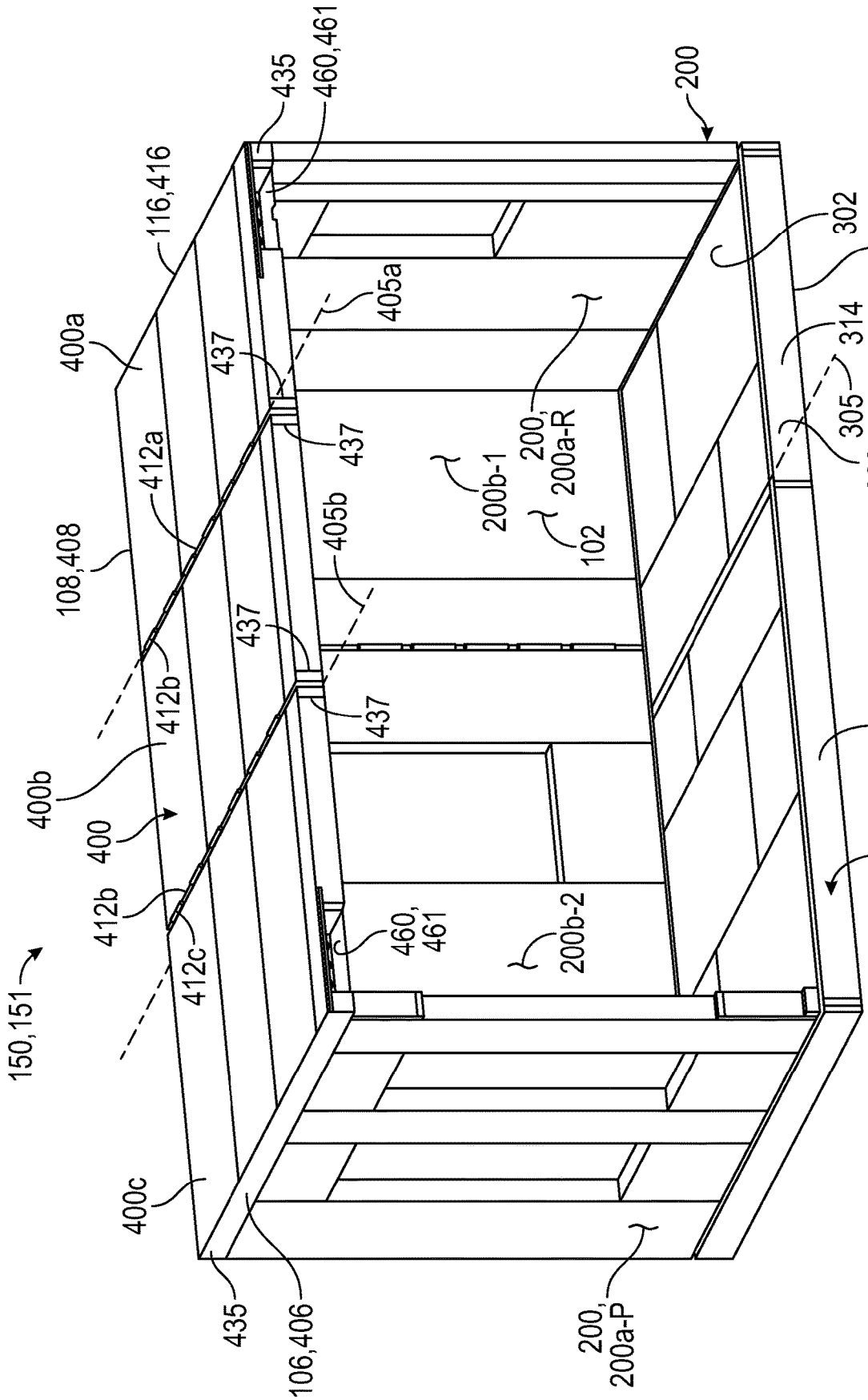
150,151
400a
116,416
435
460,461
200
302
304
405a
437
437
200,
200a-R
314
305
300a
412a
108,408
200b-1
102
405b
437
437
412b
400b
400
412b
412c
460,
461
200b-2
300b
300
400c
435
106,406
200,
200a-P

Figure 6B

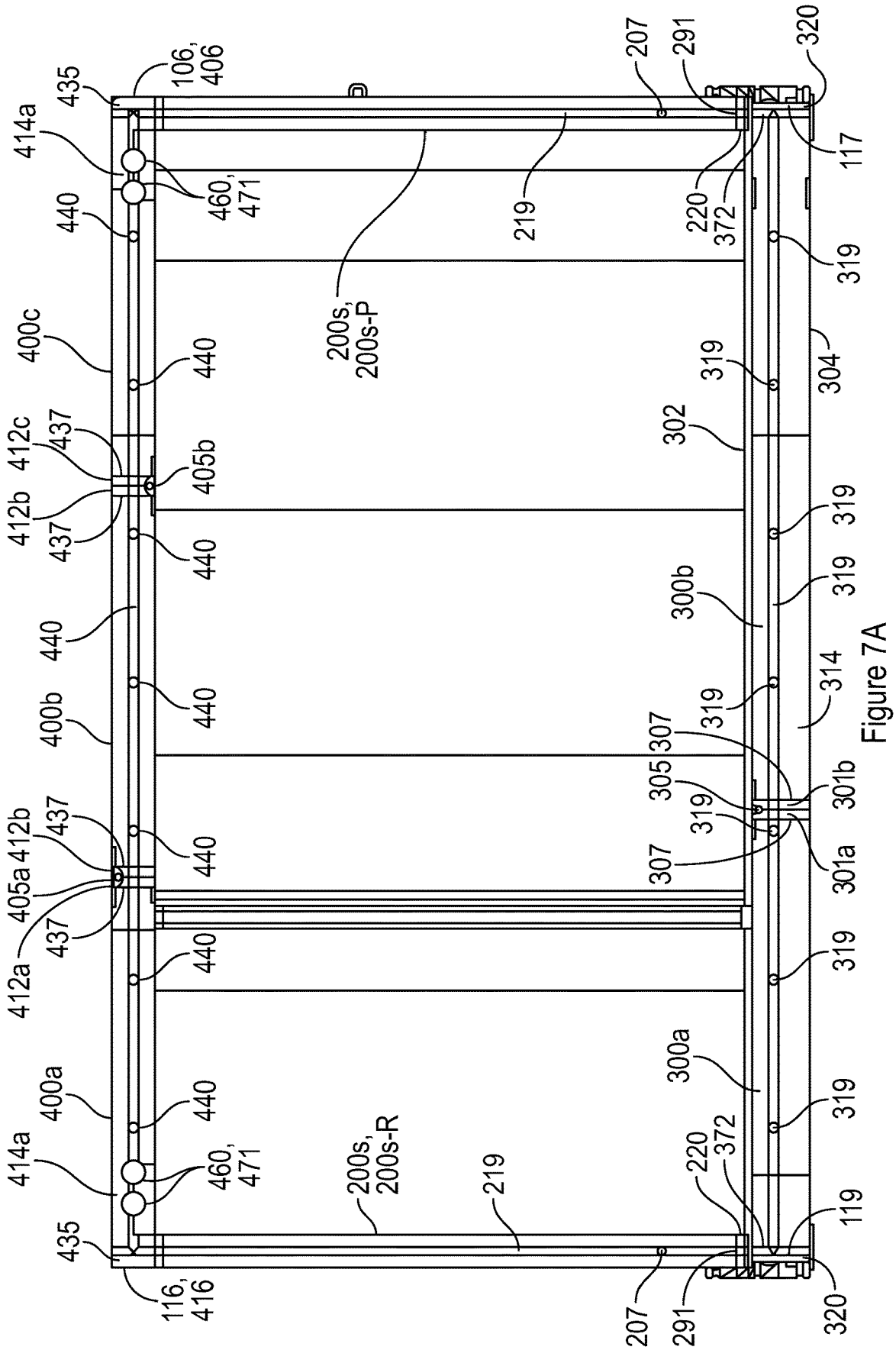
435
106, 406
414a
460, 471
440
400c
412c
437
405b
412b
400b
405a
412a
400a
116, 416
207
291
320
117
219
220
372
319
200s, 200s-P
200s, 200s-R
304
302
300b
314
307
305
301b
301a
300a
119

Figure 7A

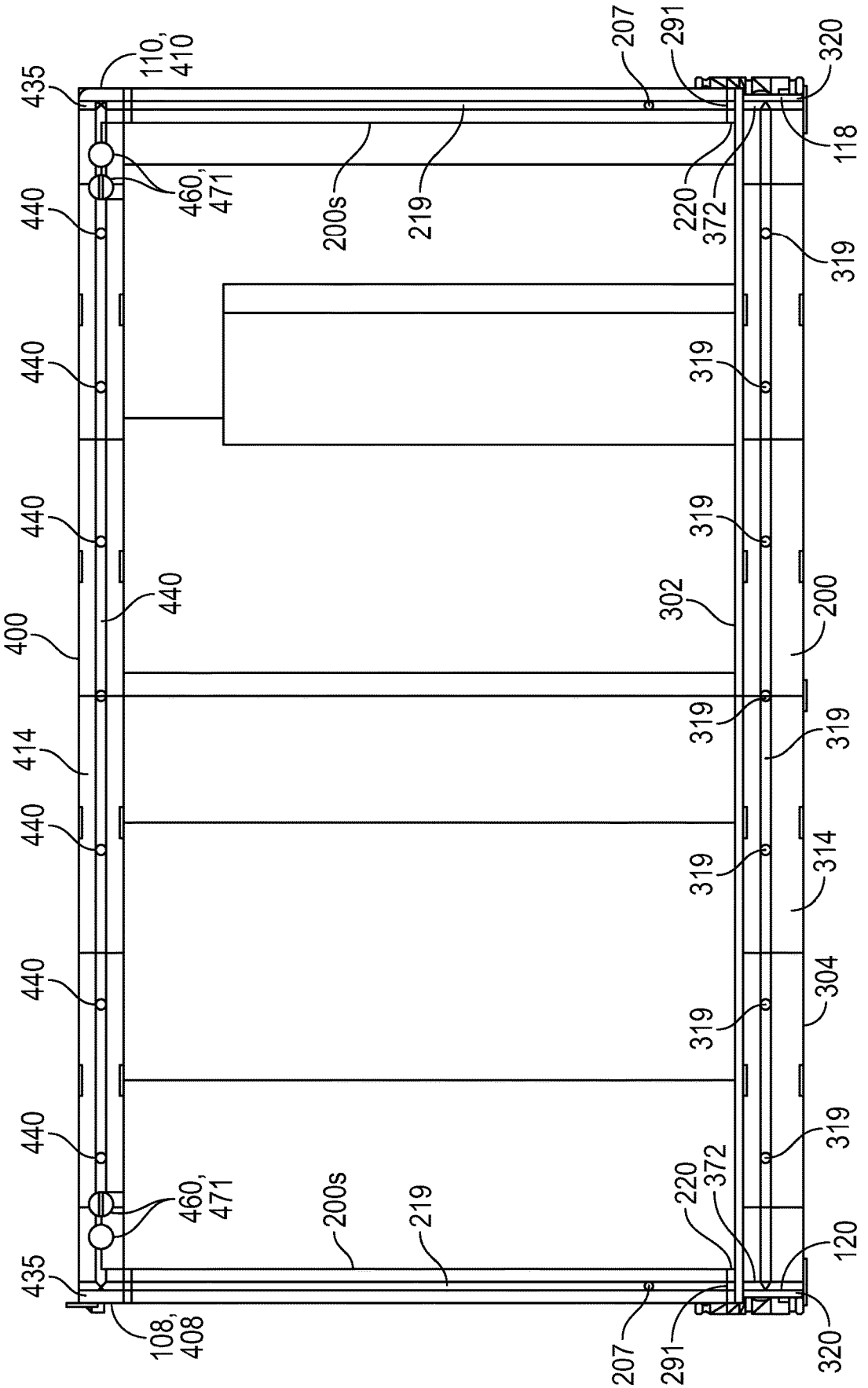
110, 410
207
291
320
435
460, 471
200s
219
220
372
118
440
319
400
302
200
414
314
304
120
108, 408

Figure 7B

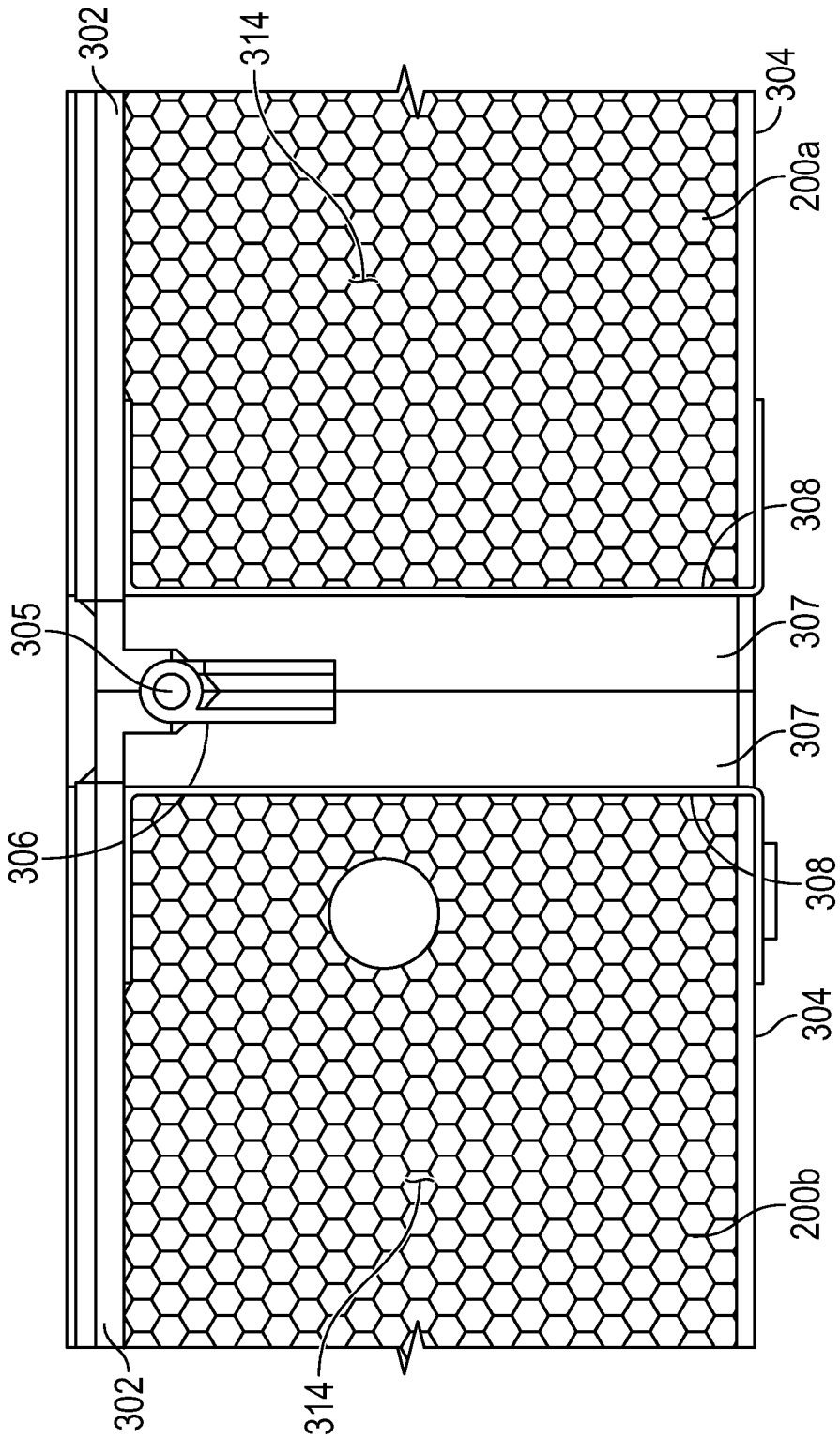

Figure 8

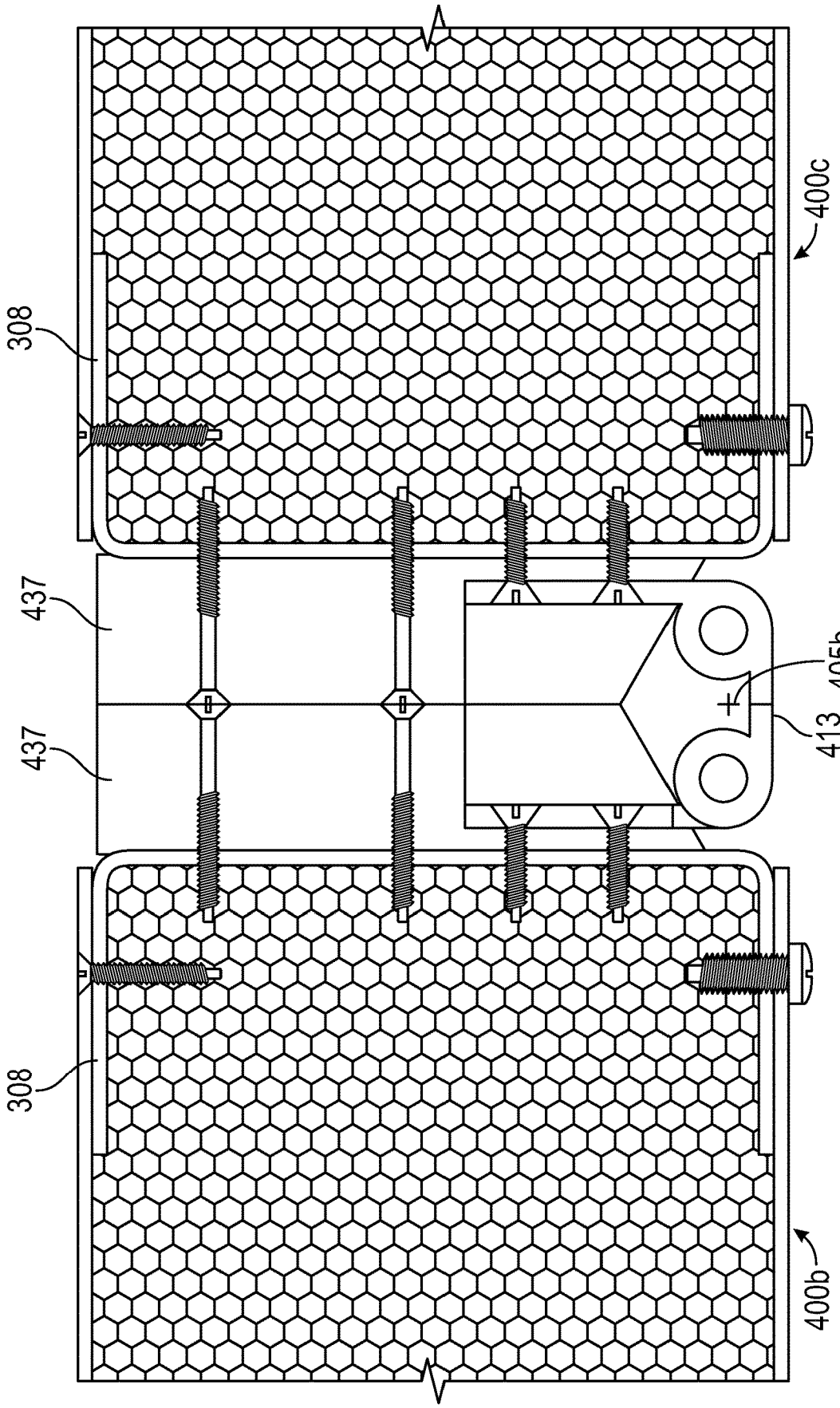

Figure 9

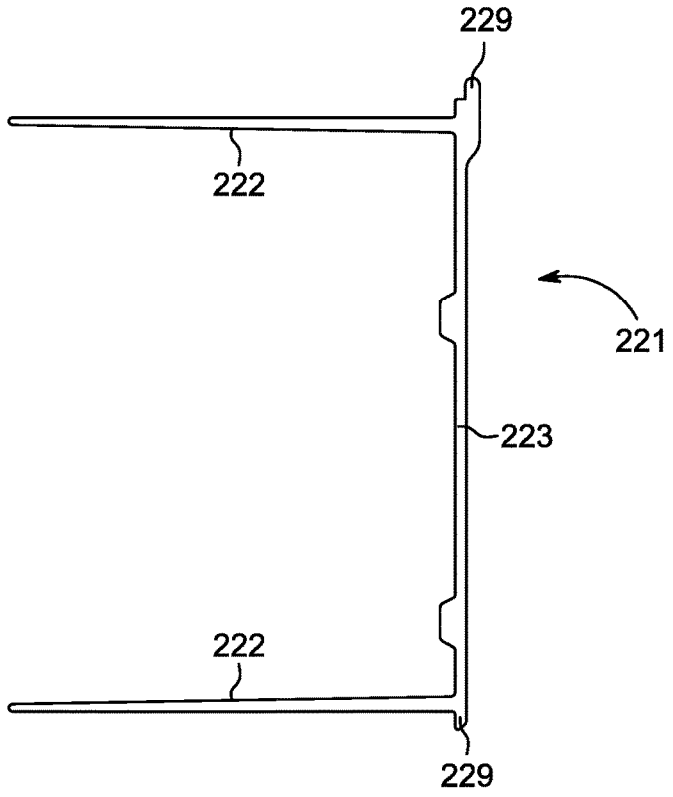

Figure 10

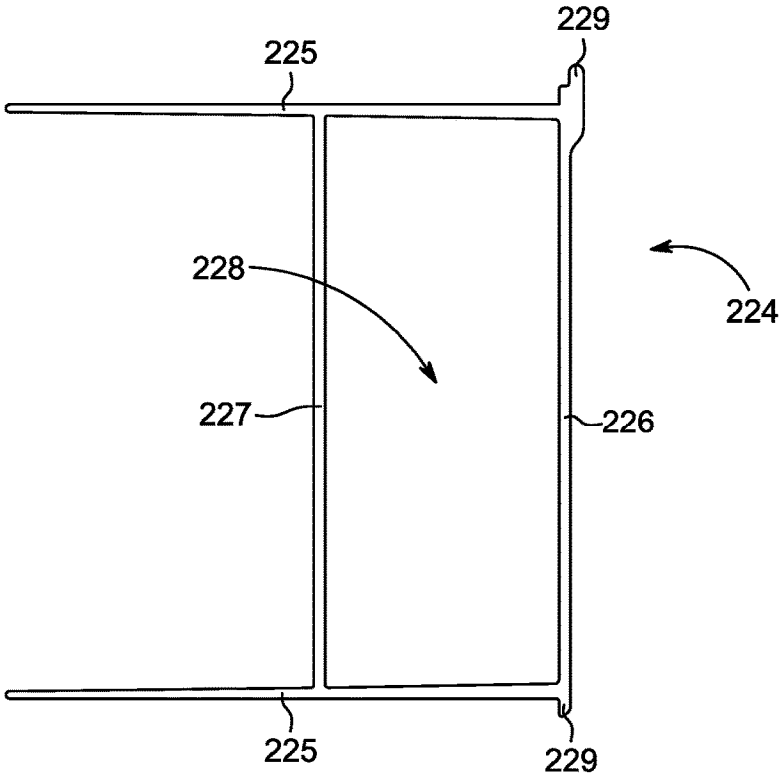

Figure 11

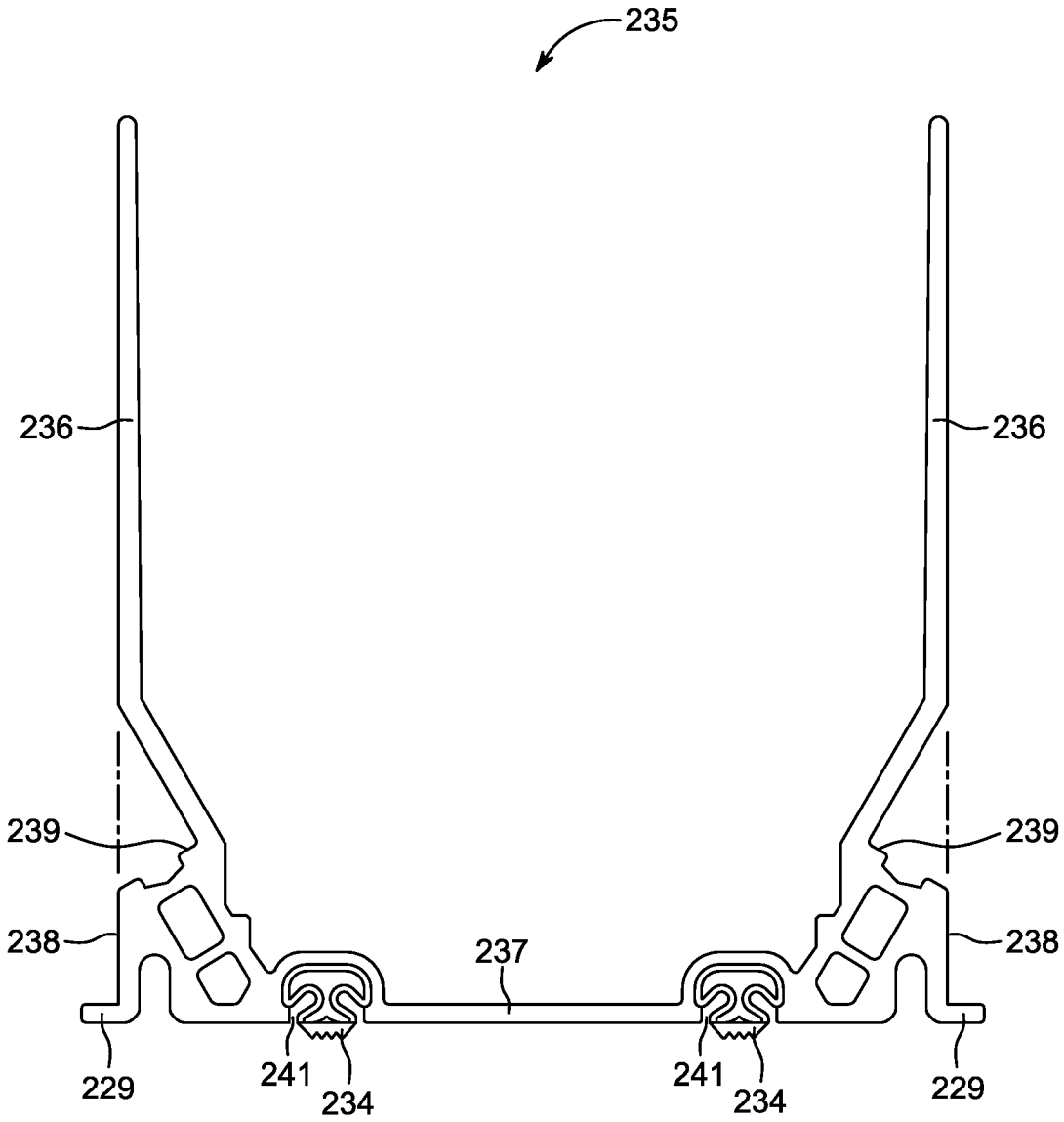

Figure 12

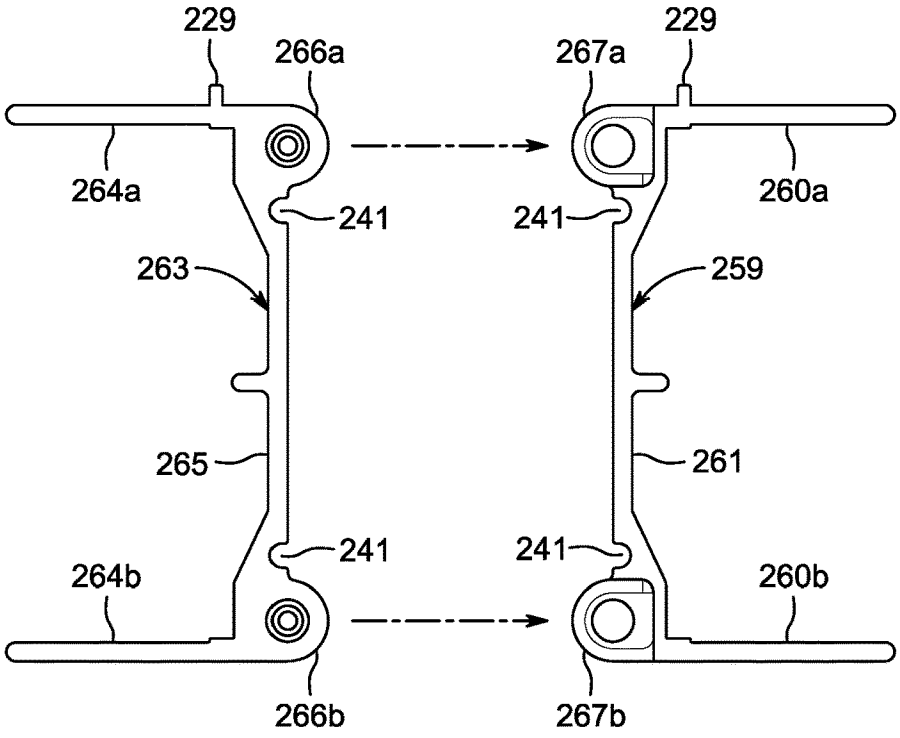

Figure 13A

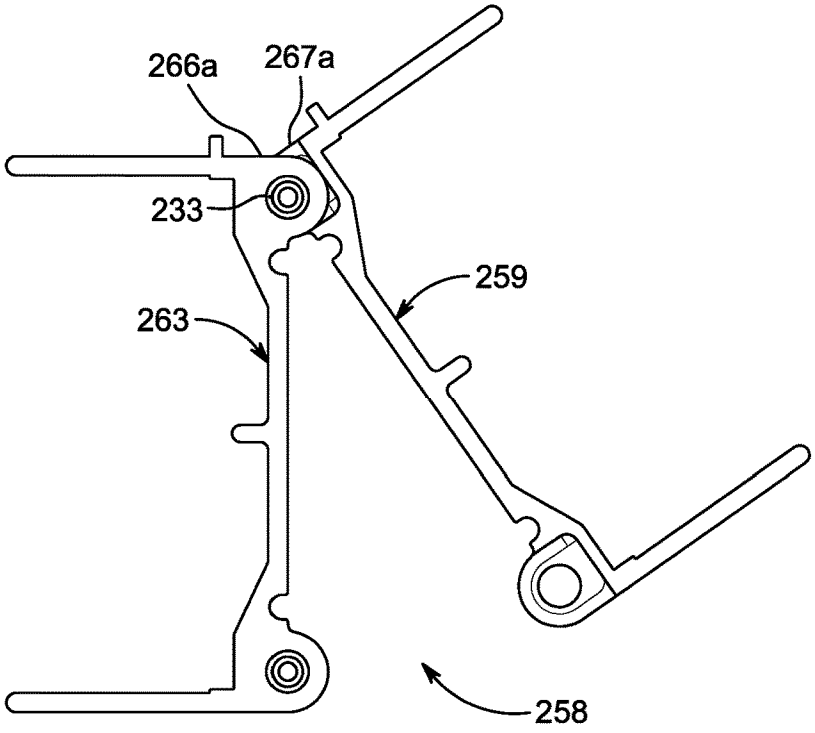

Figure 13B

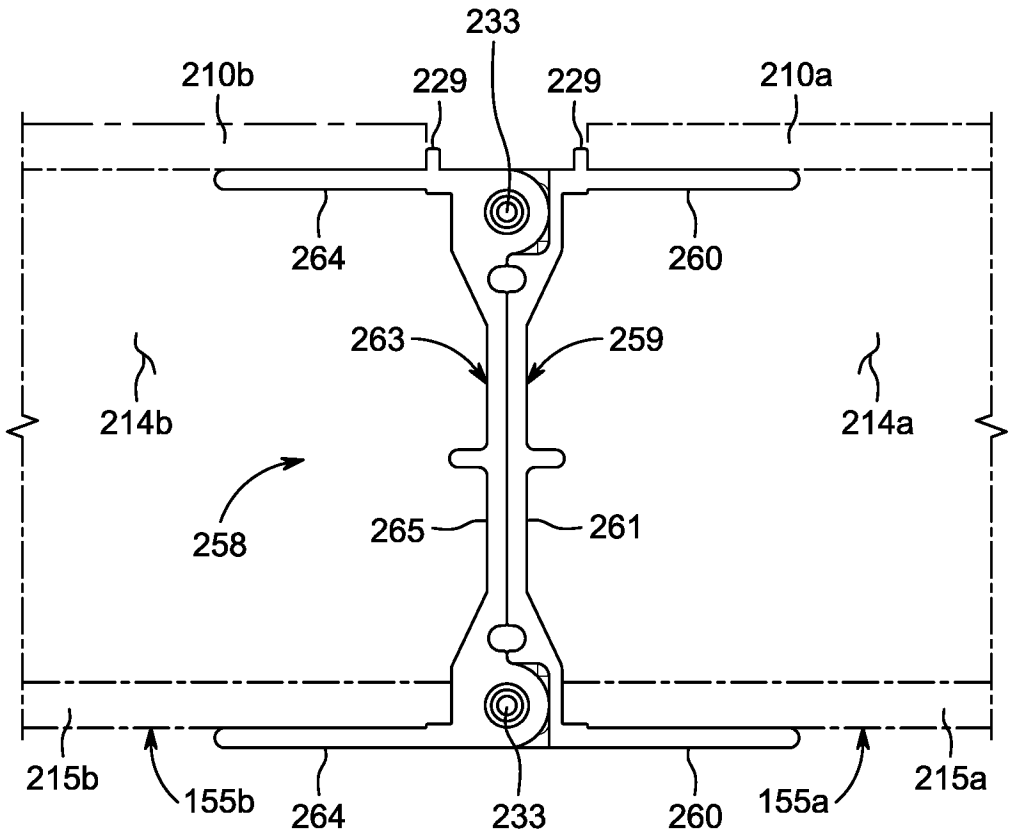
233
210b
229
229
210a
264
260
263
259
214b
214a
258
265
261
215b
155b
264
233
260
155a
215a

Figure 13C

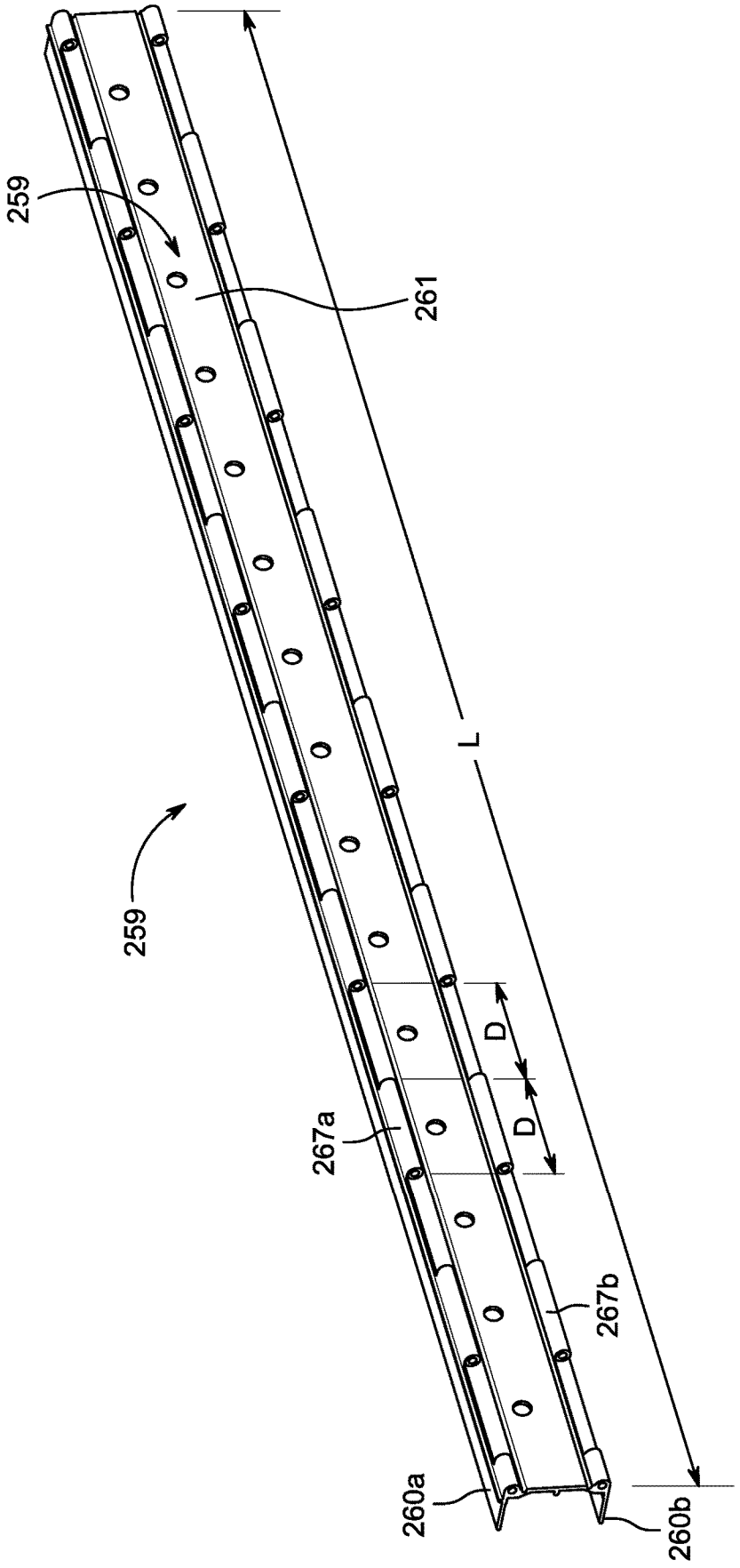

Figure 13D

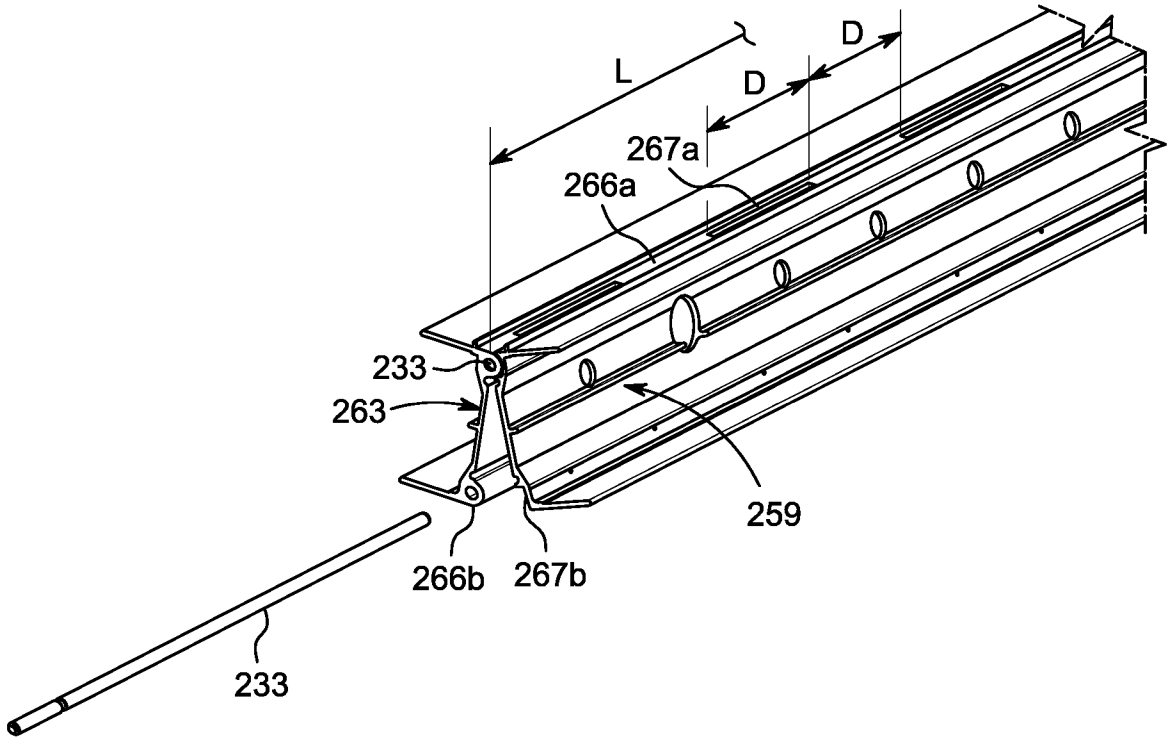

Figure 13E

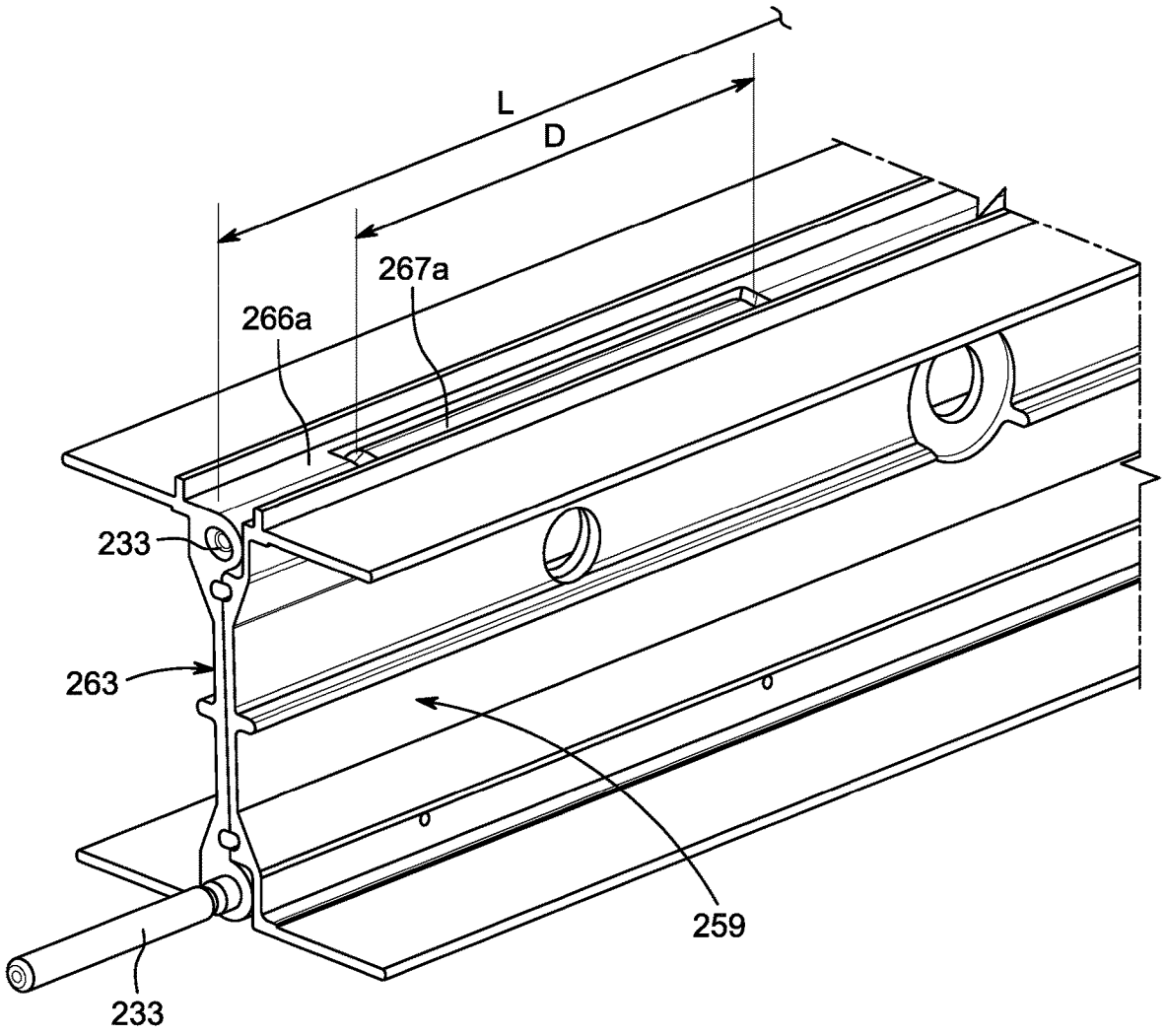

Figure 13F

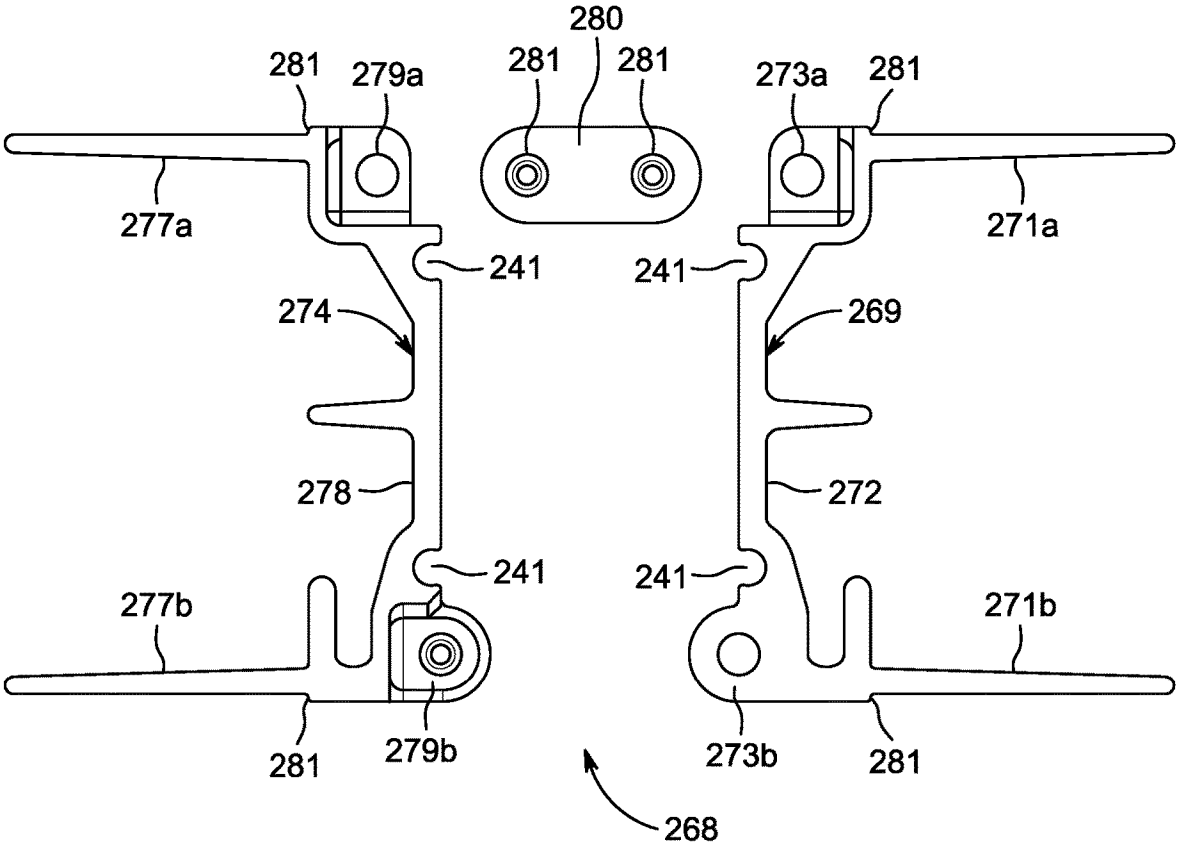
280
281
279a
281
281
273a
281
277a
271a
241
241
274
269
278
272
241
241
277b
271b
281
279b
273b
281
268

Figure 14A

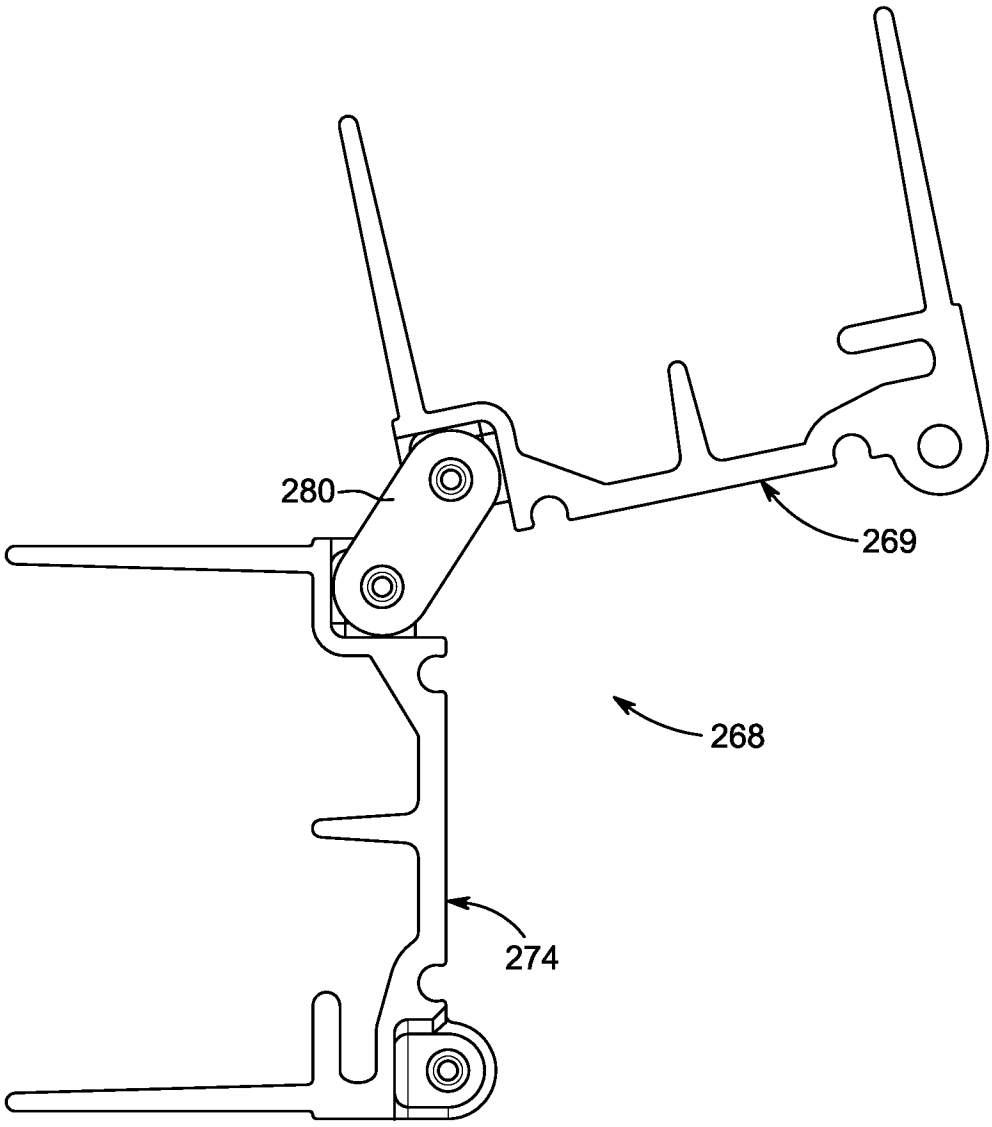

Figure 14B

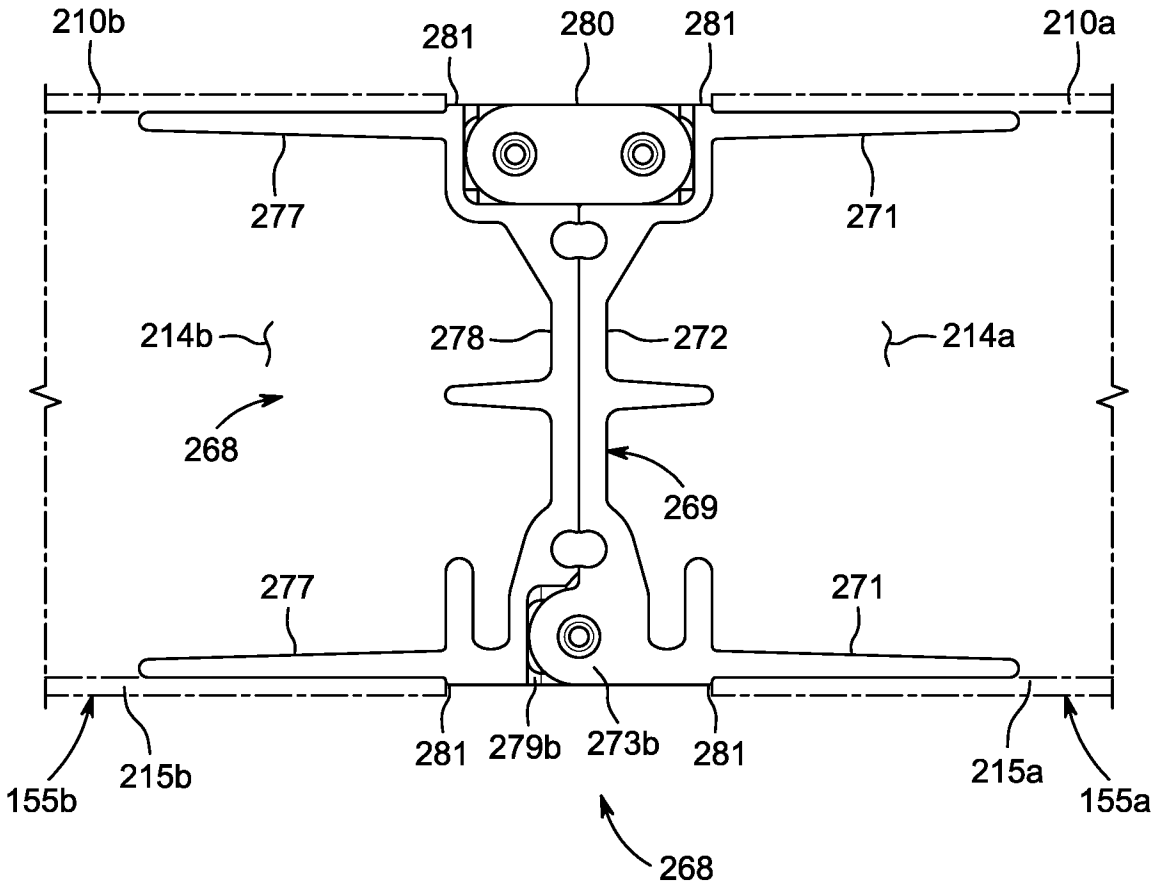
210b
281
280
281
210a
277
271
214b
278
272
214a
268
269
277
271
281
279b
273b
281
215b
155b
215a
155a
268

Figure 14C

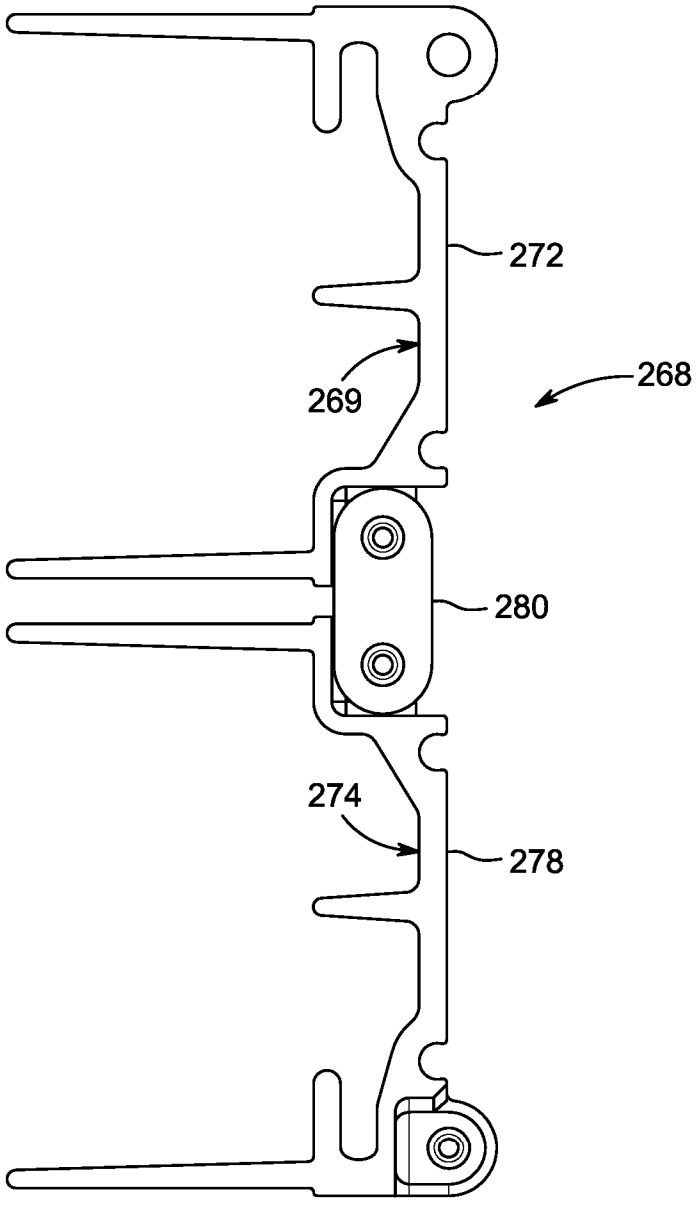

Figure 14D

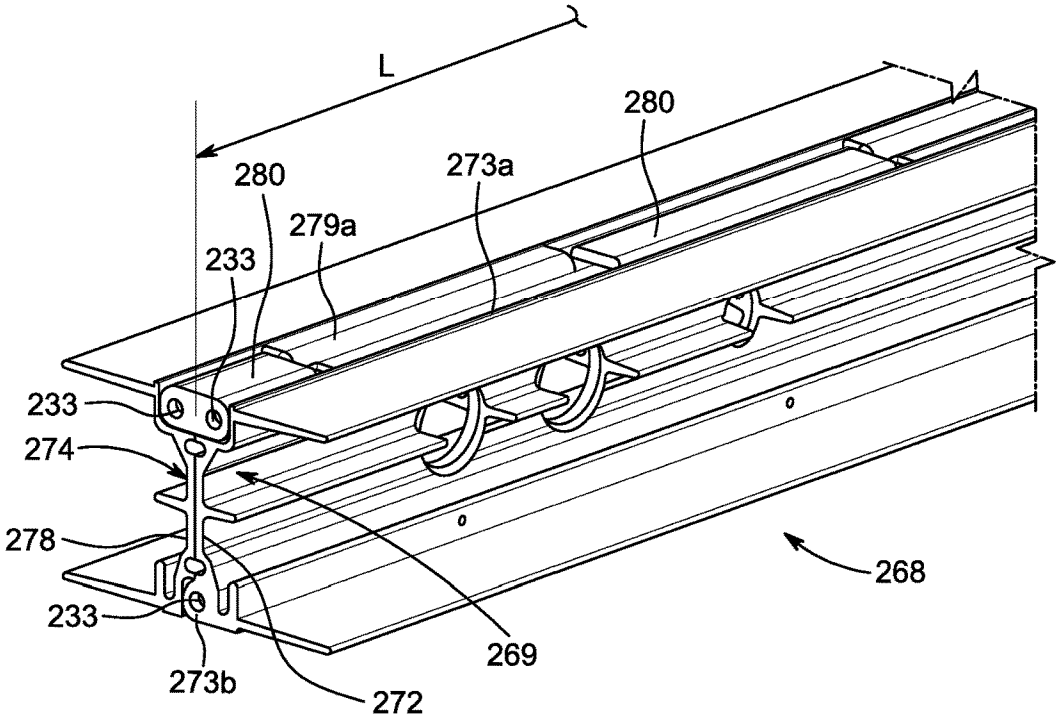

Figure 14E

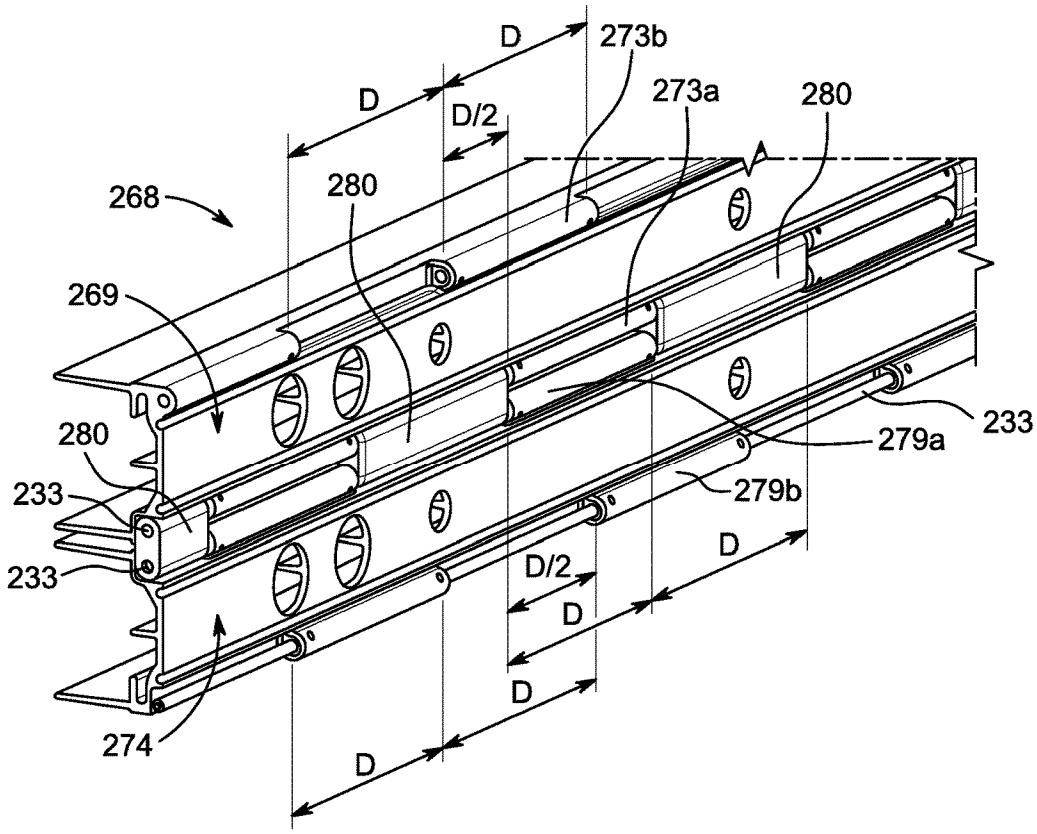

Figure 14F

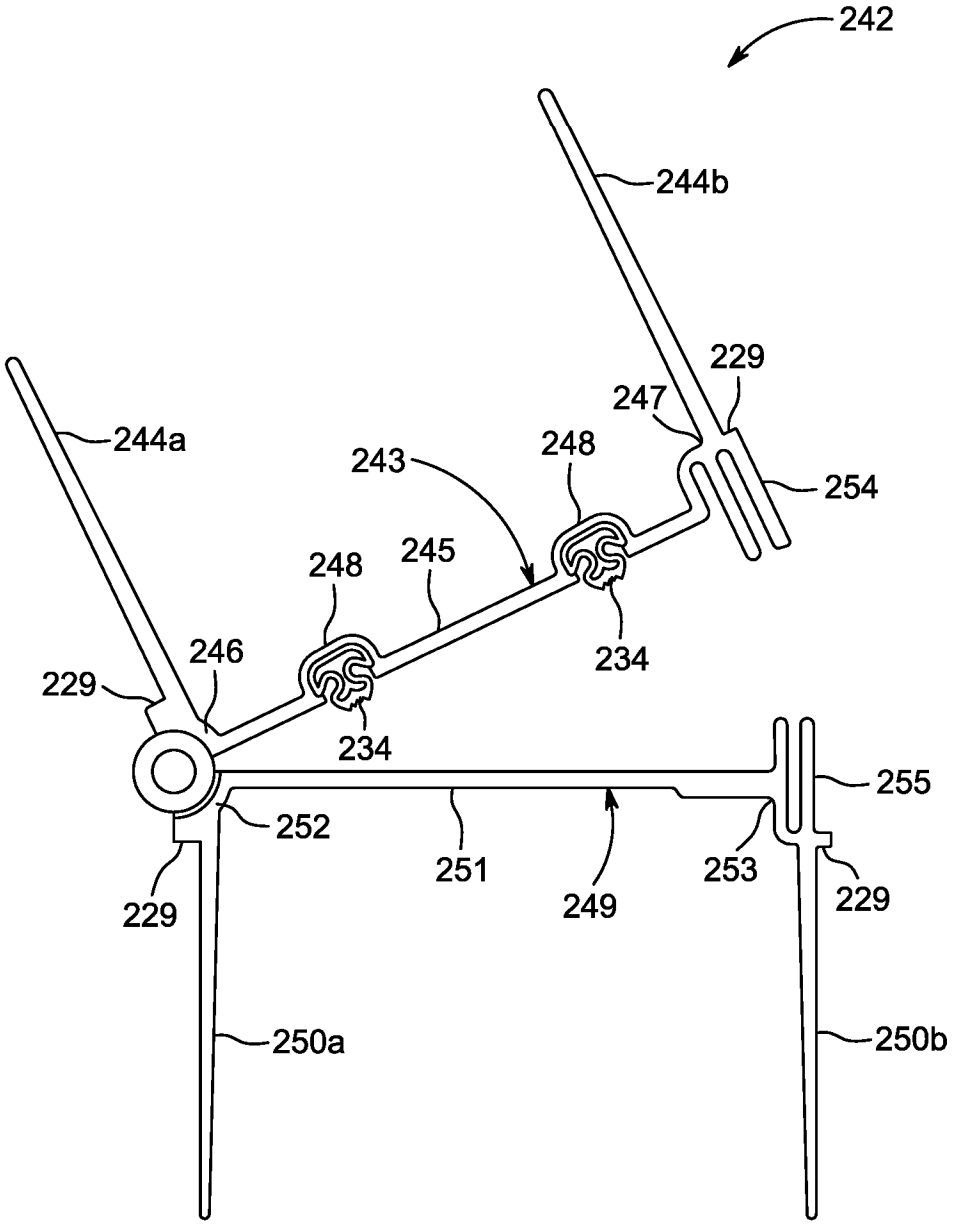
242
244b
229
247
244a
243
248
254
248
245
246
234
229
234
255
252
251
249
253
229
229
250a
250b

Figure 15

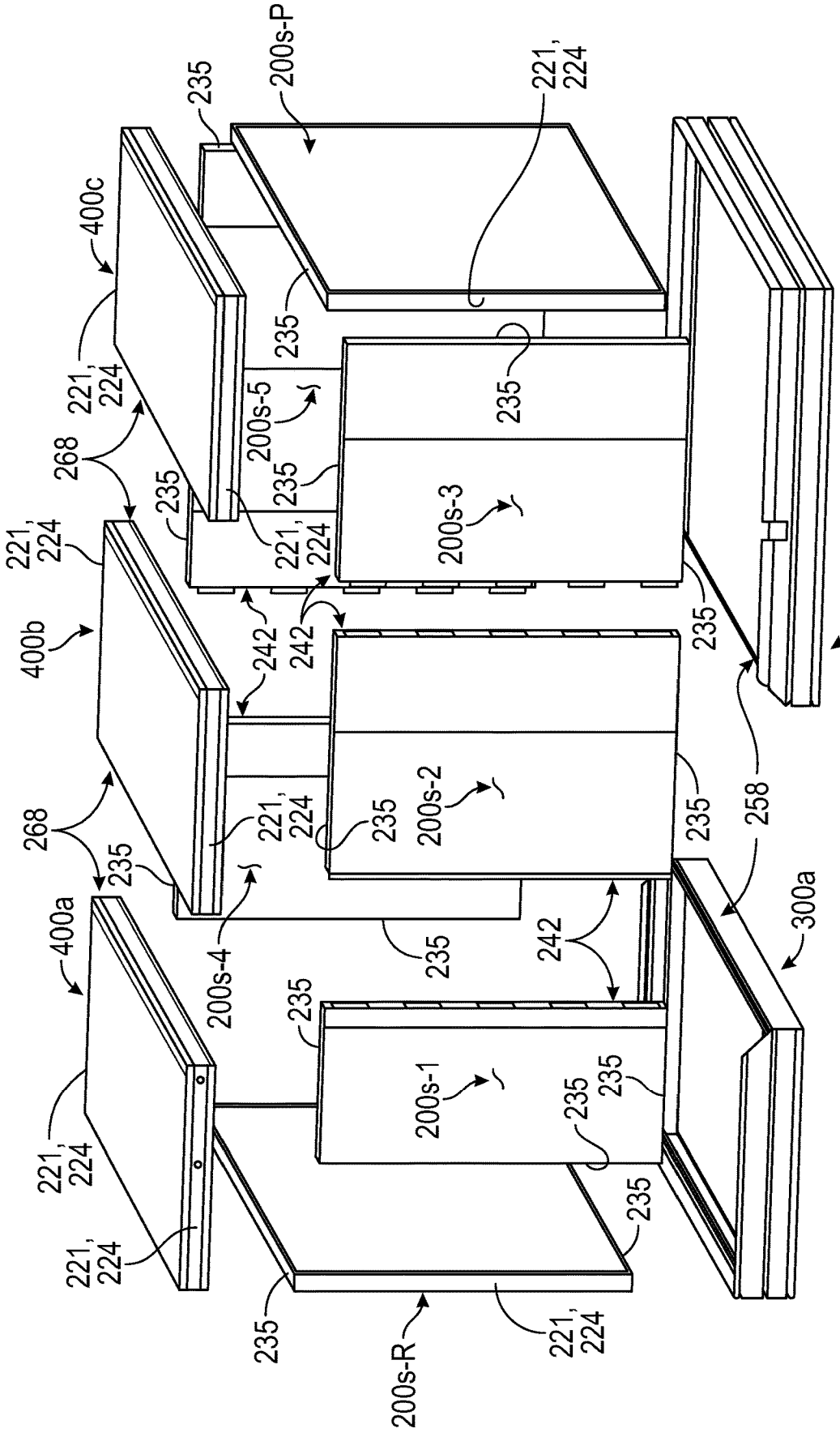
200s-P
235
221, 224
400c
235
235
200s-5
235
268
235
221, 224
221, 224
200s-3
400b
242
242
235
300b
268
235
221, 224
235
200s-2
235
258
400a
200s-4
235
242
300a
235
200s-1
235
235
221, 224
221, 224
235
235
200s-R
221, 224

Figure 16

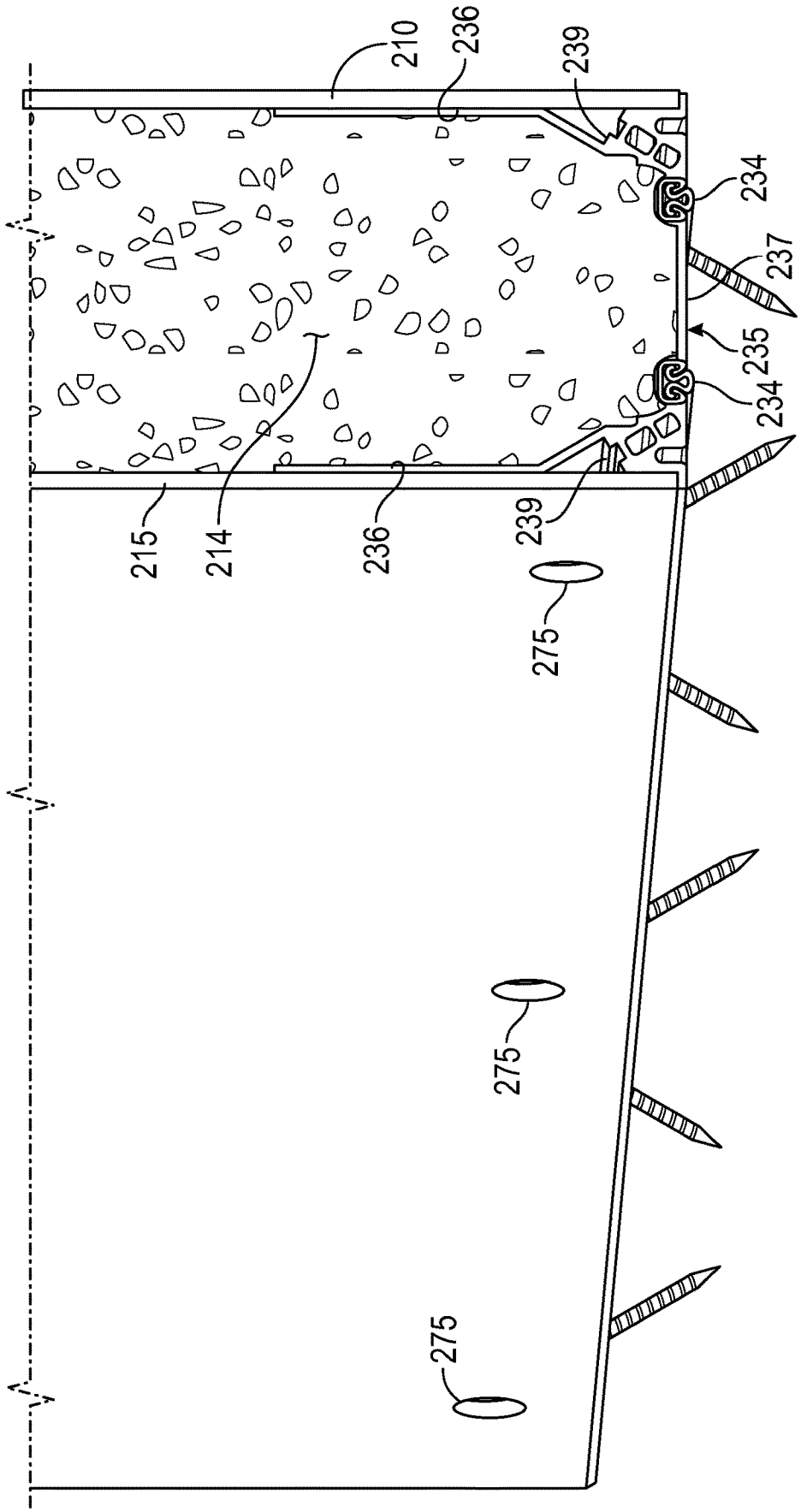

Figure 17

ENCLOSURE COMPONENT PERIMETER STRUCTURES

CROSS-REFERENCES TO RELATED APPLICATIONS

This application claims the benefit of U.S. Provisional Application No. 62/805,710, filed Feb. 14, 2019 and U.S. Provisional Application No. 62/960,991, filed Jan. 14, 2020.

BACKGROUND OF THE INVENTION

Field of the Invention

The inventions herein relate to structures, such as dwellings and other buildings for residential occupancy, commercial occupancy and/or material storage, and to components for such structures.

Description of the Related Art

In the field of residential housing, the traditional technique for building homes is referred to as "stick-built" construction, where a builder constructs housing at the intended location using in substantial part raw materials such as wooden hoards, plywood panels, and steel Lally columns. The materials are assembled piece by piece over a previously prepared portion of ground, for example, a poured concrete slab or a poured concrete or cinder block foundation.

There have been a variety of efforts to depart from the conventional construction techniques used to create dwellings, as well as commercial spaces and like. One of the alternatives to stick-built construction is very generally referred to as modular housing. As opposed to stick-built construction, where the structure is built on-site, a modular house is constructed in a factory and then shipped to the site, often by means of a tractor-trailer. A drawback of modular housing is that the prospective buyer can customize the structure layout only to a relatively limited degree. That is, while certain features, for example a closet, may be added or subtracted from a room, the general shape and layout of the house cannot be changed or adapted to the customer's preference.

Additionally, modular housing often exceeds in size normally-permitted legal limits for road transport. For example, in the United States the maximum permitted dimensions for road transport are in general 102 inches (259.1 cm) in width, 13.5 feet (4.11 m) in height and 65 to 75 feet (19.81 to 22.86 m) in length. Thus, in many cases transporting a modular house from factory to site requires oversize load permits, which may impose restrictions on when transport can be undertaken and what routes can be utilized. Oversize road regulations may also require the use of an escort car and a trailing car as well. All of these requirements and restrictions inevitably increase the cost of the modular housing.

Significant advancements in the construction of dwellings and commercial space are described in U.S. Pat. Nos. 8,474,194, 8,733,029 and U.S. Patent Publication No. 2019/0100908. In one aspect, those patent documents pertain to fabricating wall, floor and ceiling components in a factory that are folded together into a compact shipping module, and which are then transported to the intended location and unfolded to yield a structure, where the folding and unfolding of the components can be facilitated by the use of hinges.

SUMMARY OF THE INVENTION

The present inventions are directed to enclosure component perimeter structures, including hinged structures that

can be left in place after delivery, thereby reducing on-site set-up costs. In addition, the hinged and other enclosure component perimeter structures described herein can serve as structural load-bearing members, and also contribute to weather-proofing of the enclosure components to which they are affixed. The present inventions facilitate the provision of enclosure components and enclosure component portions which can be compactly packaged for easy shipment from a factory to a construction site, and which are joined to each other in a manner to permit rapid field-level deployment with factory-level tolerances and repeatability.

In one aspect, the present inventions are directed to a reinforced enclosure member for a building structure, comprising a planar laminate having a generally linear edge comprising a first facing layer; a layer of foam having a first face and a second opposing face; and a second facing layer; with the first facing layer fastened to the first face of the layer of the foam, and the second facing layer fastened to the second opposing face of the layer of foam; and a reinforced end cap comprising a first elongate flange surface joined to an elongate web surface at a first junction, a second elongate flange surface joined to the elongate web surface at a second junction, the first elongate flange surface and the second elongate flange surface being spaced-apart by a distance, and with the web surface, the first elongate flange surface and the second elongate flange surface generally forming a C-channel shape. There is provided an elongate cavity wall joined to each of the first and second elongate flange surfaces, the elongate cavity wall being spaced from and generally parallel to the elongate web surface, and spanning the distance spacing apart the first and second elongate flange surfaces, to define a reinforcement channel; and a filler reinforcement within the reinforcement channel. The reinforced end cap is secured to the generally linear edge of the planar laminate, with the distance spacing apart the first and second elongate flange surfaces adapted to receive between them at least the generally linear edge of the layer of foam.

In another aspect, the present inventions are directed to foldable enclosure members for a building structure that comprise a first planar laminate having a first generally linear edge and a second planar laminate having a second generally linear edge, where each planar laminate comprises a first facing layer; a layer of foam having a first face and a second opposing face; and a second facing layer; where the first facing layer is fastened to the first face of the layer of foam, and the second facing layer is fastened to the second opposing face of the layer of foam. The foldable enclosure components additionally comprise a first perimeter section comprising a first elongate web surface having a first elongate edge region and a second elongate edge region; and a second perimeter section comprising a third elongate edge region and a fourth elongate edge region. The first perimeter section is secured to the generally linear edge of the first planar laminate, and the second perimeter section is secured to the generally linear edge of the second planar laminate. The first perimeter section has a first series of hinge knuckles in proximity to the first elongate edge region, and a second series of hinge knuckles in proximity to the second elongate edge region; and the second perimeter section correspondingly has a third series of hinge knuckles in proximity to the third elongate edge, and a fourth series of hinge knuckles in proximity to the fourth elongate edge region. The first series of hinge knuckles is intermeshed with the third series of hinge knuckles, and a first rod is received in and joins the intermeshed first and third series of hinge knuckles to form a pivotable junction between the first perimeter section and the second perimeter section that can pivot from a folded

position, where the first elongate web surface is oriented at an angle to the second elongate web surface, to an unfolded position where the first elongate web surface is in flush contact with the second elongate web surface. The second series of hinge knuckles is adapted to intermesh with the fourth series of hinge knuckles when the pivotable junction is in the unfolded position. These foldable enclosure components also comprise a second rod, and the second series of hinge knuckles and the fourth series of hinge knuckles are adapted to receive, when intermeshed, the second rod, to form a rigid structure between the first perimeter section and the second perimeter section, the rigid structure comprising the first perimeter section and the second perimeter section.

These and other aspects of the present inventions are described in the drawings annexed hereto, and in the description of the preferred embodiments and claims set forth below.

BRIEF DESCRIPTION OF THE DRAWINGS

FIGS. **1**A and **1**B are perspective views of finished structures prepared in accordance with the present inventions.

FIGS. **2**A and **2**B are top schematic views of finished structures prepared in accordance with the present inventions.

FIGS. **3**A and **3**B are end views of shipping modules from which are formed the finished structures respectively shown in FIGS. **1**A and **1**B.

FIGS. **4**A, **4**B, **4**C and **4**D are exploded cross-sectional views of four embodiments of laminate multi-layer constructions for use in the enclosure components of the present inventions.

FIG. **5**A is a cutaway perspective interior view of a wall component in accordance with the present inventions, and FIG. **5**B is a cutaway perspective exterior view of a wall component in accordance with the present inventions.

FIGS. **6**A and **6**B are partial cutaway perspective views of a finished structure in accordance with the present inventions, depicting in greater detail aspects of the ceiling, wall and floor components of a first type of structure in accordance with the present inventions.

FIGS. **7**A and **7**B are partial cutaway views of a finished structure in accordance with the present inventions, depicting in greater detail aspects of the ceiling, wall and floor components of a second type of structure in accordance with the present inventions.

FIG. **8** is a schematic side view of an embodiment of a hinge structure joining two floor portions in accordance with the present inventions.

FIG. **9** is a schematic side view of an embodiment of a hinge structure joining two roof portions in accordance with the present inventions.

FIG. **10** is a side view of a free-standing end cap in accordance with the present inventions, FIG. **11** is a side view of a reinforced end cap in accordance with the present inventions and FIG. **12** is a side view of an abutting end cap in accordance with the present inventions.

FIGS. **13**A, **13**B and **13**C are side views of a first hinged I-beam structure in accordance with the present inventions, FIG. **13**D is a perspective view of a perimeter section of the first hinged I-beam structure in accordance with the present inventions, and FIGS. **13**E and **13**F are perspective views of the first hinged I-beam structure in accordance with the present inventions.

FIGS. **14**A, **14**B, **14**C and **14**D are side views of a second hinged I-beam structure in accordance with the present inventions, and FIGS. **14**E and **14**F are perspective views of the second hinged I-beam structure in accordance with the present inventions.

FIG. **15** is a side view of a tongue-and-groove hinged structure in accordance with the present inventions.

FIG. **16** is an exploded perspective view of a finished structure in accordance with the present inventions, depicting suitable locations for the enclosure component perimeter structures of the present inventions.

FIG. **17** is a perspective view of an enclosure component and its abutting end cap prepared in accordance with the present inventions, depicting the apertures in the structural layer for receiving fasteners.

DETAILED DESCRIPTION OF THE PREFERRED EMBODIMENTS

FIG. **1**A depicts a finished structure **150** of a first type (sometimes referred to herein as type 1 structure **151**) in accordance with the inventions disclosed herein, and FIG. **1**B depicts a finished structure **150** of a second type (sometimes referred to herein as type 2 structure **152**) in accordance with the inventions disclosed herein. Type 1 structure **151** is smaller than type 2 structure **152**, but the inventions described herein are equally applicable to the fabrication and deployment of type 1 structure **151**, type 2 structure **152**, and to other structures of different dimensions as well. Accordingly, references herein to "structure **150**" should be understood to generically denote type 1 structure **151** and type 2 structure **152** without distinction. Likewise, reference in this disclosure to the same numerically identified component among different embodiments indicates that such component is the same among such different embodiments.

Structure **150** as depicted in FIGS. **1**A and **1**B has a rectangular shape made of three types of generally planar and rectangular enclosure components **155**, the three types of enclosure components **155** consisting of a wall component **200**, a floor component **300**, and a ceiling component **400**. Structure **150** has one floor component **300**, one ceiling component **400** and four wall components **200**. As shown in FIGS. **1**A and **1**B, the perimeter of finished structure **150** is defined by first longitudinal edge **106**, first transverse edge **108**, second longitudinal edge **116** and second transverse edge **110**.

Enclosure components **155** (wall component **200**, floor component **300** and ceiling component **400**) can be fabricated and dimensioned as described herein and positioned together to form a shipping module **100**, shown end-on in FIGS. **3**A and **3**B, with FIG. **3**A depicting a shipping module **100** for a type 1 structure **151** and FIG. **3**B depicting a shipping module **100** for a type 2 structure **152**. The enclosure components **155** are dimensioned so that the shipping module **100** is within U.S. federal highway dimensional restrictions. As a result, shipping module **100** can be transported over a limited access highway more easily, and with appropriate trailering equipment, transported without the need for oversize permits. Thus, the basic components of finished structure **150** can be manufactured in a factory, positioned together to form the shipping module **100**, and the modules **100** can be transported to the desired site for the structure, where they can be readily assembled and customized, as described herein.

Enclosure Component Laminate Design

A laminate multi-layer design can be used to fabricate the enclosure components **155** of the present inventions. FIGS.

4A-4D depict four embodiments of that multi-layer design, in exploded cross-section, for an exemplary enclosure component **155**.

First and Second Embodiments

Interior Sheathing Layer (**282**). In the first and second embodiments of the laminate multi-layer design, shown in FIGS. **4**A and **4**B respectively, the surface of enclosure component **155** that will face toward the interior of structure **150** is optionally provided with an interior sheathing layer **282**. It is preferred that interior sheathing layer **282** be fabricated of relatively thick paper, of a weight comparable to that used as the exterior surface of drywall (marketed for example under the trademark Sheetrock®). Interior sheathing layer **282** preferably is unrolled from a continuous roll of paper (the paper roll optionally having a width approximating the width of enclosure component **155**) to yield a seamless interior finish for enclosure component **155**.

First Structural Layer (**210**). A first structural layer **210** is provided in the first embodiment depicted in FIG. **4**A and in the second embodiment depicted in FIG. **4**B. If used, the interior sheathing layer **282** is bonded to this first structural layer **210** with a suitable adhesive, preferably a polyurethane based construction adhesive. First structural layer **210** in the embodiments shown comprises a plurality of rectangular structural building panels **211** principally comprising an inorganic composition of relatively high strength, such as magnesium oxide (MgO). Suitable structural building panels **211** can be MgO boards approximately four feet (1.22 m) wide by approximately eight feet (2.44 m) long. In a specific implementation of the first embodiment of the multi-layer design of FIG. **4**A, the thickness of those structural building panels **211** using magnesium oxide board can be approximately 0.5 inch (1.27 cm); as an alternative, a thickness of approximately 0.25 inch (0.64 cm) can be employed.

To form first structural layer **210**, a number of generally rectangular structural building panels **211** are laid adjacent to each other to generally cover the full area of the intended enclosure component **155**. For example, for the wall component **200***a* shown in FIG. **5**A, structural building panels **211** are arranged horizontally and vertically adjacent each other in a checkerboard relationship to generally cover the full area of wall component **200***a*. As another exemplary arrangement, a number of structural building panels **211** of sufficient length can be vertically positioned side-by-side to generally cover the full area of a wall component **200**.

First structural layer **210** in the first and second embodiments, respectively shown in FIGS. **4**A and **4**B, additionally comprises multiple binding strips **212**, made for example of magnesium oxide board, laid both horizontally and/or vertically as appropriate. In particular, binding strips **212** are positioned over the linear junctions between adjacent panels **211**, and then are fastened to the regions of those panels bordering those junctions, using for example a suitable adhesive, preferably a polyurethane based construction adhesive, to form a lap joint between the adjacent building panels **211**, thereby bonding together the panels **211** of first structural layer **210** to form a single unit. Binding strips **212** of magnesium oxide board can be for example approximately six inches (15.2 cm) wide and 0.25 inch (0.635 cm) or 0.5 inch (1.27 cm) thick.

First Strengthening Layer (**213-1**). As shown in the first and second embodiments depicted in FIGS. **4**A and **4**B respectively, there is next provided a first strengthening layer **213-1**, made of woven fiber such as woven fiberglass. In the first embodiment, shown in FIG. **4**A, first strengthening layer **213-1** preferably is unrolled from a continuous roll of mat (the mat roll optionally having a width approximating the width of enclosure component **155**) to yield a seamless interior layer. In the second embodiment, shown in FIG. **4**B, first strengthening **213-1** comprises multiple separate fiber layer segments, as exemplified by segments **213-1***a* and **213-1***b* shown in FIG. **4**B, which are positioned between binding strips **212**.

Foam Panels (**214**). Referring again to FIGS. **4**A and **4**B, there is next provided in the first and second embodiments a plurality of generally planar rectangular foam panels **214** collectively presenting a first face and a second opposing face. Foam panels **214** are made for example of expanded polystyrene (EPS) or polyurethane foam. A number of these foam panels **214** are laid adjacent to each other to generally cover the full area of the intended enclosure component **155**. For example, for the wall component **200***a* shown in FIG. **5**B, foam panels **214** are arranged horizontally and vertically adjacent each other in a checkerboard relationship to generally cover the full area of wall component **200***a*. As another exemplary arrangement, a number of foam panels **214** of sufficient length can be vertically positioned side-by-side to generally cover the full area of a wall component **200**.

It is preferred that the seams between adjacent foam panels **214** not overlay or coincide with the seams between the structural building panels **211** of first structural layer **210**, in reference to the direction across the thickness of the enclosure component **155**. Rather, it is preferred that the seams between adjacent foam panels **214** be offset a distance from the seams between adjacent structural building panels **211** of first structural layer **210**. For example, for foam panels **214** vertically positioned side-by-side and structural building panels **211** vertically positioned side-by-side, the seams between adjacent foam panels can be positioned at or as near the mid-line (the middle dividing line) of structural building panels **211** as design, manufacturing and other considerations permit. Correspondingly, for foam panels **214** arranged in a checkerboard relationship and building panels **211** arranged in a checkerboard relationship, each corner where four foam panels **214** meet can be positioned at or as near the center of a structural building panel **211** as design, manufacturing and other considerations permit.

First strengthening layer **213-1** preferably is sandwiched between and fastened to both first structural layer **210** and to the first face of foam panels **214** using a suitable adhesive, preferably a polyurethane based construction adhesive. If the woven fiber of first strengthening layer **213-1** has a relatively open weave, only one adhesive spread is required during manufacture to bond together the layers **210**, **213-1** and **214** into a bonded laminate structure. Adjacent foam panels **214** optionally can be fastened to each other with a suitable adhesive applied between abutting panels, preferably a polyurethane based construction adhesive.

Second Strengthening Layer (**213-2**). In the first embodiment of the laminate multi-layer design shown in FIG. **4**A, there is a strengthening layer of woven fiber, first strengthening layer **213-1**, on one face of foam panels **214** only. In the second embodiment of the laminate multi-layer design, shown in FIG. **4**B, there is a second strengthening layer **213-2**, made of woven fiber such as woven fiberglass, on the second opposing face of foam panels **214**. Second strengthening layer **213-2** can be continuous, like first strengthening layer **213-1** shown in FIG. **4**A, or can comprise multiple separate fiber layer segments, as exemplified by segments **213-2***a* and **213-2***b* shown in FIG. **4**B, which are positioned between binding strips **217**, described further below.

Second Structural Layer (**215**). In the first embodiment of the laminate multi-layer design shown in FIG. **4**A, there is provided a second structural layer **215**, which is positioned on the second opposing face of foam panels **214** (the face distal from first structural layer **210**). In the second embodiment of the laminate multi-layer design, shown in FIG. **4**B, there is also provided a second structural layer **215**, although in this second embodiment the second strengthening layer **213-2** is sandwiched between the second opposing face of foam panels **214** and second structural layer **215**. Second structural layer **215** comprises a plurality of rectangular structural building panels **216**, each principally comprising an inorganic composition of relatively high strength, such as magnesium oxide. Suitable building panels **216** can be magnesium oxide boards approximately four feet (1.22 m) wide by eight feet (2.44 m) long. In an exemplary embodiment of second structural layer **215**, the thickness of those structural building panels **216** using magnesium oxide board can approximately 0.5 inch (1.27 cm) as an alternative, a thickness of approximately 0.25 inch (0.64 cm) can be employed.

To form second structural layer **215**, a number of rectangular structural building panels **216** are laid adjacent to each other to generally cover the full area of the intended enclosure component **155**. For example, for the wall component **200***a* shown in FIG. **5**B, structural building panels **216** are arranged horizontally and vertically adjacent each other in a checkerboard relationship to generally cover the full area of wall component **200***a*. As another exemplary arrangement, a number of structural building panels **216** of sufficient length can be vertically positioned side-by-side to generally cover the full area of a wall component **200**.

As is the case for first structural layer **210**, it is preferred that the seams between adjacent foam panels **214** not overlay or coincide with the seams between the structural building panels **216** of second structural layer **215** in the direction across the thickness of the enclosure component **155**. Rather, it is preferred that the seams between adjacent foam panels **214** be offset a distance from the seams between adjacent structural building panels **216** of second structural layer **215**. For example, for foam panels **214** vertically positioned side-by-side and structural building panels **216** vertically positioned side-by-side, the seams between adjacent foam panels **214** can be positioned at or as near the mid-line of structural building panels **216** as design, manufacturing and other considerations permit. Correspondingly, for foam panels **214** arranged in a checkerboard relationship and structural building panels **216** arranged in a checkerboard relationship, each corner where four foam panels **214** meet can be positioned at or as near the center of a structural building panel **216** as design, manufacturing and other considerations permit. On the other hand, the seams between the structural building panels **211** of first structural layer **210** can coincide without preference in the direction across the thickness of the enclosure component **155** with the seams of structural building panels **216** of second structural layer **215**.

The second structural layer **215** in the first and second embodiments, shown in FIGS. **4**A and **4**B respectively, additionally comprises multiple binding strips **217**, made for example of magnesium oxide board, positioned between building panels **216** and foam panels **214**. Binding strips **217** are positioned over the linear junctions between adjacent panels **216**, and then are fastened to the regions of those panels bordering those junctions, using for example a suitable adhesive, preferably a polyurethane based construction adhesive, to form a lap joint between the adjacent building panels **216**, thereby bonding together the panels **211** of first structural layer **210** to form a single unit. Binding strips **217** of magnesium oxide board can be for example approximately six inches (15.2 cm) wide and 0.25 inches (0.635 cm) or 0.5 inch (1.27 cm) thick.

If first strengthening layer **213-1** and/or second strengthening layer **213-2** are formed from a continuous roll, then foam panels **214** can be provided with suitable recesses (not shown) to accommodate such local thickness variations of the combination of layer **213-1**/binding strips **212** and/or layer **213-2**/binding strips **217** as may arise in the regions proximate the binding strips. If first strengthening layer **213-1** and/or second strengthening layer **213-2** are formed from separate segments, then foam panels **214** can be provided with suitable recesses (not shown) to receive binding strips **212** and/or **217**.

In the first embodiment shown in FIG. **4**A, second structural layer **215** is fastened to foam panels **214** using for example a suitable adhesive, preferably a polyurethane based construction adhesive. In the second embodiment shown in FIG. **4**B, second strengthening layer **213-2** preferably is fastened to both second structural layer **215** and to foam panels **214** using for example a suitable adhesive, preferably a polyurethane based construction adhesive. If first strengthening layer **213-2** has a woven fiber having a relatively open weave, only one adhesive spread is required during manufacture to bond together the layers **214**, **213-2** and **215** into a bonded laminate structure.

In the embodiment of wall component **200** shown in FIG. **5**B, the exterior of the structural building panels **216** of second structural layer **215** are provided with grooves **218** for aesthetic reasons, particularly to better conceal the presence of the seams between adjacent panels **216**. Optionally, the exterior of panels **216** can be covered with additional protective material unrolled from a continuous roll.

Strengthening layer **213-1** and/or strengthening layer **213-2** can be omitted in the absence of tensile loading in the applicable region. Further, although the interior sheathing layer **282** is shown bonded to first structural layer **210**, it can with equal facility be bonded to second structural layer **215**, where that structural layer faces the interior, inhabited portion of the structure. Interior sheathing layer **282** can also be omitted where not desired.

Third and Fourth Embodiments

A third embodiment of the laminate multi-layer design is shown in FIG. **4**C. As compared to the second embodiment shown in FIG. **4**B, the third embodiment of FIG. **4**C has a sheet metal layer **205** in lieu of second structural layer **215**, but is otherwise identical in design to the second embodiment shown in FIG. **4**B. Sheet metal layer **205**, which can be steel or aluminum for example, is made from a plurality of generally planar rectangular metal sheets **206** positioned adjacent to each other to generally cover the full area of the intended enclosure component **155**, and joined to each other, such as by riveting or welding. Following joining, the joined metal sheets **206** of sheet metal layer **205** are fastened with a suitable adhesive spread to the second opposing face of foam panels **214** (the face of foam panels **214** distal from structural layer **210**).

It is preferred that the seams between adjacent foam panels **214** not overlay or coincide with the seams in the joined metal sheets **206** of sheet metal layer **205** in the direction across the thickness of the enclosure component **155**. Rather, it is preferred that the seams between adjacent foam panels **214** be offset a distance from the seams in the joined metal sheets **206** of sheet metal layer **205**. For

example, for foam panels **214** vertically positioned side-by-side and joined metal sheets **206** vertically positioned side-by-side, the seams between adjacent foam panels can be positioned at or as near the mid-line (the middle dividing line) of joined metal sheets **206** as design, manufacturing and other considerations permit.

In this third embodiment, the metal sheets **206** of sheet metal layer **205** can be made of steel, optionally given a protective and/or decorative surface treatment, each having for example a thickness in the range of approximately 26 to 20 gauge (0.0179 inch (0.454 mm) to 0.0478 inch (1.214 mm)). Use of sheet metal layer **205** provides increased tensile strength as compared for example to a second structural layer **215** comprising structural building panels **216**, particularly magnesium oxide boards. At the same time, the laminate multi-layer design shown in FIG. **4**C exhibits substantial compressive strength in the region of a first structural layer **210** comprising structural building panels **211**, particularly magnesium oxide boards.

A fourth embodiment of the laminate multi-layer design is shown in FIG. **4**D. As compared to the third embodiment shown in FIG. **4**C, the fourth embodiment of FIG. **4**D includes a protective layer **293** interposed between foam panels **214** and sheet metal layer **205**, but is otherwise identical in design to the third embodiment shown in FIG. **4**C. Protective layer **293** comprises a plurality of generally rectangular protective panels **294** arranged adjacent to each other to generally cover the full area of the intended enclosure component **155**. The protective panels **294** of protective layer **293** can principally comprise a fire-resistant inorganic composition, such as magnesium oxide (MgO) or calcium sulfate dihydrate (also known as drywall and marketed for example under the trademark Sheetrock®). Suitable protective panels **294** for protective layer **293** can be magnesium oxide boards approximately four feet (1.22 m) wide by approximately eight feet (2.44 m) long.

The protective building panels **294** of protective layer **293** are bonded to both foam panels **214** and sheet metal layer **205** with a suitable adhesive spread applied between protective layer **293** and the second opposing face of foam panels **214**, and between protective layer **293** and sheet metal layer **205**. A suitable thickness for protective building panels **294** of protective layer **293**, using magnesium oxide boards, can be 0.125 inch (3.18 mm). A principal function of protective layer **293** in the fourth embodiment of the laminated multi-layer construction shown in FIG. **4**D is to impart fire resistance.

Enclosure Component Exterior Edge Reinforcement

The exterior edges defining the perimeter of each enclosure component **155** can be provided with edge reinforcement, as desired. Exterior edge reinforcement can protect foam panel material that would otherwise be exposed at the exterior edges of enclosure components **155**. Exterior edge reinforcement can also serve other functions, as described below. Exterior edge reinforcement can be fabricated from one or more of laminated strand lumber board, wooden board, C-channel extruded aluminum or steel, or the like, and is generally secured to the exterior edges of enclosure component **155** with fasteners, such as screw or nail fasteners, and/or adhesive.

Enclosure Component Partitioning

Enclosure components **155** in certain instances are partitioned into enclosure component portions to facilitate forming a compact shipping module **100**. In those instances where an enclosure component **155** is partitioned into enclosure component portions, any exterior edge reinforcement on the exterior edges defining the perimeter of the enclosure component is segmented as necessary between or among the portions.

Enclosure Component Interior Edge Reinforcement

An enclosure component **155** partitioned into enclosure component portions will have interior edges. There will be two adjacent interior edges for each adjacent pair of enclosure component portions. Such interior edges can be provided with interior edge reinforcement. Similar to exterior edge reinforcement, such interior edge reinforcement can protect foam panel material that would otherwise be exposed at the interior edges of enclosure components **155**. Interior edge reinforcement can also serve other functions, as described below. Interior edge reinforcement can be fabricated from one or more of laminated strand lumber board, wooden board, C-channel extruded aluminum or steel, or the like, and is generally secured to the interior edges of enclosure component **155** with fasteners, such as screw or nail fasteners, and/or adhesive.

Further design details for finished structure **150**, wall component **200**, floor component **300**, and ceiling component **400** are provided in the sections following.

Wall Component (**200**)

Typically, a finished structure **150** will utilize four wall components **200**, with each wall component **200** corresponding to an entire wall of structure **150**. Wall component **200** has a generally rectangular perimeter. The height and length of wall components **200** can vary in accordance with design preference, subject to the dimensional restrictions applicable to transport, described above. In this disclosure, where structure **150** is fashioned with two opposing sides longer than the other two sides (as is the case with type 1 structure **151**), the two wall components **200** positioned along first and second longitudinal edges **106** and **116** are sometimes referred to as long wall components, with each being denominated **200***a*, and the two wall components **200** positioned along first and second transverse edges **108** and **110** are sometimes referred to as short wall components, with each being denominated **200***b*. Where structure **150** is fashioned with all sides of approximately equal length (as is the case with type 2 structure **152**), the four wall components **200** are sometimes each denominated **200***s*. The basic structure and design of wall component **200** is the same for both type 1 structure **151** and type 2 structure **152**, and are applicable to structures **150** generally.

In a particular embodiment of the type 1 structure **151** depicted in FIGS. **1**A and **2**A, long wall component **200***a* is approximately thirty-nine feet (11.89 m) in length, and short wall component **200***b* is approximately 19.5 feet (5.94 m) in length; thus long wall components **200***a* positioned along first and second longitudinal edges **106** and **116** are approximately twice the length of short wall components **200***b* positioned along first and second transverse edges **108** and **110**. Long wall components **200***a* and short wall components **200***b* are approximately 9.5 feet (2.9 m) in height and approximately six inches (15.24 cm) in thickness.

As indicated above, the type 2 structure **152** shown in FIGS. **1**B and **2**B has wall components **200**, **200***s* of equal length (each denominated **200***s*)— i.e., type 2 structure **152** generally has a square shape. Thus in the case of type 2 structure **152**, the first and second longitudinal edges **106** and **116**, and the first and second transverse edges **108** and **110**, are all of equal length. In a particular embodiment of the type 2 structure **152** shown in FIGS. **1**B and **2**B, wall components **200**, **200***s* can be approximately 19 feet (5.79 m) in length, approximately 9.45 feet (2.88 m) in height and approximately six inches (15.24 cm) in thickness.

As indicated above, wall components **200** of the present inventions preferably utilize one of the laminate multi-layer designs described above in reference to FIGS. **4**A-**4**D. For example, long wall component **200***a*, shown in FIGS. **5**A and **5**B, can utilize the second embodiment of the laminate multi-layer designs described with reference to FIG. **4**B. The particular embodiment of wall component **200***s* of the type 2 structure **152** shown in FIGS. **1**B and **2**B referenced above can utilize the second multi-layer design (FIG. **4**B) with 0.25 inch (0.635 cm) thick MgO board for structural building panels **211** of first structural layer **210** and also for structural building panels **216** of second structural layer **211**, with binding strips **211**, **217** of 0.25 inch (0.635 cm) thick MgO board six inches (15.24 cm) wide. The foam panels **214** can be 5.5 inches (13.97 cm) thick, yielding a wall component **200** approximately six inches (15.24 cm) thick.

The perimeter of each wall component **200** is generally provided with exterior edge reinforcement. As exemplified by long wall component **200***a* shown in FIG. **5**A, the exterior edge reinforcement for wall component **200** is a floor plate **220** along the bottom horizontal edge, a ceiling plate **240** along the top horizontal edge and two end pieces **270** respectively fastened at each vertical edge **275** of wall component **200**. In the case of a wall component **200**, exterior edge reinforcement provides regions for fastening like regions of abutting wall components **200**, ceiling component **400** and floor component **300**, in addition to in addition to protecting the exterior edges of foam panel material.

The exterior edge reinforcement for wall component **200** provided by floor plate **220**, ceiling plate **240**, and end pieces **270** can be fabricated from one or more of laminated strand lumber board, wooden board, C-channel extruded aluminum or steel, or the like. Alternatively, the enclosure component perimeter structures described below can be employed in addition to or in substitution for exterior edge reinforcement of the type just described for wall component **200**.

Wall Partitioning

Partitioned Wall Portions of Type 1 Structure (**151**). Referring to FIG. **2**A, the two short wall components **200***b* of type 1 structure **151** each comprises first wall portion **200***b*-**1** and second wall portion **200***b*-**2**. Each of wall portions **200***b*-**1** and **200***b*-**2** is a generally rectangular planar structure. The interior vertical edge **191**-**1** of each of wall portions **200***b*-**1** is proximate to a respective interior vertical edge **191**-**2** of wall portion **200***h*-**2**. Interior edge reinforcement can be provided at any one or more of vertical edges **191**-**1** and **191**-**2**, examples of which include laminated strand lumber board, wooden board, C-channel extruded aluminum or steel.

Referring again to FIG. **2**A, the two first wall portions **200***b*-**1** are located at fixed positions, opposite each other on floor portion **300***a*, proximate first and second transverse edges **108**, **110** of finished structure **150**. Each first wall portion **200***b*-**1** is joined to a second wall portion **200***b*-**2** with a hinge structure. These hinge structures permit second wall portions **200***b*-**2** to pivot about vertical axes **191** between a folded position and an unfolded position. FIG. **2**A depicts second portions **200***b*-**2** both in their unfolded positions, where they are denominated **200***b*-**2***u*, and in their inwardly folded positions, where they are denominated **200***b*-**2***f*. When second portions **200***b*-**2** are in their folded positions, they facilitate forming a compact shipping module. When second portions **200***b*-**2** are in their unfolded positions, with first portions **200***b*-**1** they form the short wall components **200***b* of type 1 structure **151** shown in FIG. **2**A.

Partitioned Wall Portions of Type 2 Structure (**152**). Referring to FIG. **2**B, type 2 structure **152** has two opposing wall components **200***s*, where one of the opposing wall components **200***s* comprises first wall portion **200***s*-**1**, second wall portion **200***s*-**2** and third wall portion **200***s*-**3**, and the other of the opposing wall components **200***s* comprises fourth wall portion **200***s*-**4** and fifth wall portion **200***s*-**5**. Each of wall portions **200***s*-**1**, **200***s*-**2**, **200***s*-**3**, **200***s*-**4** and **200***s*-**5** has a generally rectangular planar structure. As shown in FIG. **2**B, the interior vertical edge **192**-**1** of wall portion **200***s*-**1** is proximate to a respective interior vertical edge **192**-**2** of wall portion **200***s*-**2**, and the interior vertical edge **193**-**2** of wall portion **200***s*-**2** is proximate a respective interior vertical wall edge **193**-**3** of wall portion **200***s*-**3**. Also as shown in FIG. **2**B, the interior vertical edge **194**-**4** of wall portion **200***s*-**4** is proximate to a respective interior vertical edge **194**-**5** of wall portion **200***s*-**5**. Interior edge reinforcement can be provided at any one or more of vertical edges **192**-**1**, **192**-**2**, **193**-**2**, **193**-**3**, **194**-**4** and **194**-**5**, examples of which include laminated strand lumber board, wooden board, C-channel extruded aluminum or steel.

Referring again to FIG. **2**B, first wall portion **200***s*-**1** is fixed in position on floor portion **300***a* proximate to first transverse edge **108**, and fourth wall portion **200***s*-**4** is fixed in position on floor portion **300***a*, opposite first wall portion **200***s*-**1** and proximate to second transverse edge **110**. First wall portion **200***s*-**1** is joined to second wall portion **200***s*-**2** with a hinge structure that permits wall portion **200***s*-**2** to pivot about vertical axis **192** between a folded position and an unfolded position. Further, second wall portion **200***s*-**2** is joined to third wall portion **200***s*-**3** with a hinge structure to permit third wall portion **200***s*-**3** to pivot about vertical axis **193** between a folded position and an unfolded position. For the opposing wall, fourth wall portion **200***s*-**4** is joined to fifth wall portion **200***s*-**5** with a hinge structure that permits first wall portion **200***s*-**5** to pivot about vertical axis **194** between a folded position and an unfolded position. Notably, fifth wall portion **200***s*-**5** is longer than either second wall portion **200***s*-**2** or third wall portion **200***s*-**3**.

FIG. **2**B depicts second wall portion **200***s*-**2** and third wall portion **200***s*-**3** both in their unfolded positions, where they are denominated by **200***s*-**2***u* and **200***s***3**-*u* respectively, and depicts fifth wall portion **200***s*-**5** in its unfolded position, where it is denominated **200***s*-**5***u*. FIG. **2**B also depicts second wall portion **200***s*-**2** and third wall portion **200***s*-**3** both in their inwardly folded positions, where they are denominated by **200***s*-**2***f* and **200***s***3**-*f* respectively, and depicts fifth wall portion **200***s*-**5** in its inwardly folded position, where it is denominated **200***s*-**5***f*. When second wall portion **200***s*-**2**, third wall portion **200***s*-**3** and fifth wall portion **200***s*-**5** are in their inwardly folded positions, they facilitate forming a compact shipping module. When second wall portion **200***s*-**2** and third wall portion **200***s*-**3** are in their unfolded positions, with first wall portion **200***s*-**1** they form the wall component **200***s* proximate first transverse edge **108**. When fifth wall portion **200***s*-**5** is in its unfolded position, with fourth wall portion **200***s*-**4** they form the wall component **200***s* proximate second transverse edge **110**.

The hinge structures described above (for securing each first wall portion **200***b*-**1** to its second wall portion **200***b*-**2**, first wall portion **200***s*-**1** to second wall portion **200***s*-**2**, second wall portion **200***s*-**2** to third wall portion **200***s*-**3**, and fourth wall portion **200***s*-**4** to fifth wall portion **200***s*-**5**), can be surface mounted or recessed, and of a temporary or permanent nature. The provision of interior edge reinforcement, as described above, can provide a region for securing hinge structures. Suitable hinge structures can be fabricated

for example of metal, plastic, leather, ferrous or non-ferrous material. The enclosure component perimeter structures described below which include hinge structures are also suitable for securing together wall portions, such as tongue-and-groove hinged structure **242** shown in FIG. **15**. Such enclosure component perimeter structures can be employed in addition to or in lieu of the interior edge reinforcement described above.

Non-Partitioned Wall Components of Type 1 Structure (**151**). As compared to the two short wall components **200***b* of type 1 structure **151**, which are each partitioned into two portions, the two long wall components **200***a* shown in FIG. **2**A do not comprise plural wall portions, but rather each is a single piece structure. However, one of these long wall components **200***a*, which is located on floor portion **300***b* proximate to first longitudinal edge **106**, and which is sometimes denominated as (long) wall component **200***a*-P in this disclosure, is pivotally secured to floor portion **300***b* to permit wall component **200***a*-P to pivot about horizontal axis **105** shown in FIG. **3**A from a folded position to an unfolded position. Pivotally securing long wall component **200***a*-P also facilitates forming a compact shipping module **100**. The remaining long wall component **200***a*, sometimes denominated **200***a*-R in this disclosure, is rigidly secured on floor portion **300***a* proximate second longitudinal edge **116** and abutting the vertical edges of the two first wall portions **200***b*-**1** proximate second longitudinal edge **116**, as shown in FIG. **2**A.

Non-Partitioned Wall Components of Type 2 Structure (**152**). As compared to the two wall components **200***s* of type 2 structure **152**, which are each partitioned into portions, the remaining two wall components **200***s* shown in FIG. **2**B do not comprise plural wall portions, but rather are single piece structures. However, one of these wall components **200***s*, which is sometimes denominated **200***s*-P in this disclosure, and which is located on floor portion **300***b* proximate first longitudinal edge **106**, is pivotally secured to floor portion **300***b* to permit wall component **200***s*-P to pivot about horizontal axis **105** shown in FIG. **3**B from a folded position to an unfolded position. Pivotally securing wall component **200***s*-P also facilitates forming a compact shipping module **100**. The remaining wall component **200***s*, sometimes denominated **200***s*-R in this disclosure, is rigidly secured on floor portion **300***a* proximate second longitudinal edge **116** and abutting the vertical edges of first wall portion **200***s*-**1** and fourth wall portion **200***s*-**4** proximate to second longitudinal edge **116**, as shown in FIG. **2**B.

The hinge structures described above, for securing wall component **200***a*-P to floor portion **300***b*, and for securing wall component **200***s*-P to floor portion **300***b*, can be surface mounted or recessed, and of a temporary or permanent nature. The provision of exterior edge reinforcement, as described above, can provide a region for securing hinge structures. Suitable hinge structures can be fabricated for example of metal, plastic, leather, ferrous or non-ferrous material. Alternatively, the enclosure component perimeter structures described below which include hinge structures are also suitable for securing the foregoing wall components to their respective floor portions **300***b* (altered as may be appropriate, given the 90 degree (90°) junction between floor component **300***b* and wall component **200***a*-P/**200***s*-P when either of the latter is in an unfolded position). Such enclosure component perimeter structures can be employed either in addition to or in lieu of the exterior edge reinforcement described above.

Wall Chases. Where wall component **200** utilizes one of the multi-laminate designs described with respect to FIGS. **4**A-**4**C, the foam panels **214** can be provided with a series of elongate, generally parallel, approximately vertically-oriented cylindrical passageways, spaced apart at regular intervals across the entire distance between end pieces **270**, with each spanning the distance between floor plate **220** and ceiling plate **240**. These vertical passageways are denominated wall chases **219** and can be seen in FIG. **6**A in wall components **200***a*, **200***b* for a type 1 structure **151**, and in FIG. **7**A for a wall component **200***s* for a type 2 structure **152**. Wall chases **219** facilitate the installation of utility lines (such as for electrical power, lighting control, heating, ventilation, and air conditioning (HVAC), HVAC control, security systems, including energizing and communicating with smoke or heat sensors, etc.), in wall component **200**. Further details concerning these wall chases are described in U.S. Nonprovisional patent application Ser. No. 16/786,130 entitled "Foldable Building Structures with Utility Channels and Laminate Enclosures," having the same inventors and filed on the same date as the subject application. The contents of that U.S. Nonprovisional patent application Ser. No. 16/786,130 entitled "Foldable Building Structures with Utility Channels and Laminate Enclosures," having the same inventors and filed on the same date as the subject application, are incorporated by reference as if fully set forth herein, particularly the details relating to wall chases, and especially those found at paragraphs 0077-0081 and in FIGS. 5A-5C, 6A and 7A. In the event that communication is desired between wall chases **219** and the regions above ceiling plate **240** and/or floor plate **220**, and the wall component **200** is provided with enclosure component perimeter structures, as described below, either bonded to or in place of either or both of floor plate **220** and ceiling plate **240**, then those enclosure component perimeter structures can be provided with suitable apertures at appropriate locations to permit communication to the wall chases **219**.

Wall Customization Options. FIGS. **1**A and **2**A depicts wall components **200** having plural apertures, specifically door apertures **202**, for receiving door frame and door assemblies, and window apertures **204**, for receiving window frame and window assemblies. The multi-laminate construction of wall component **200** lends itself to a high degree of customization in terms of type, size and location of doors, windows and the like, while the number of apertures **202**, **204** can be varied in accordance with design preference. Further details concerning customization of wall component **200** are described in U.S. Nonprovisional patent application Ser. No. 16/786,130 entitled "Foldable Building Structures with Utility Channels and Laminate Enclosures," having the same inventors and filed on the same date as the subject application. The contents of that U.S. Nonprovisional patent application Ser. No. 16/786,130 entitled "Foldable Building Structures with Utility Channels and Laminate Enclosures," having the same inventors and filed on the same date as the subject application, are incorporated by reference as if fully set forth herein, particularly the details relating to wall customization, found for example at paragraphs 0082-0084 and in FIGS. 1A and 2A thereof.

Ceiling Component (**400**)

Typically, a finished structure **150** will utilize one ceiling component **400**; thus ceiling component **400** generally is the full ceiling of finished structure **150**. Ceiling component **400** has a generally rectangular perimeter. Among others, FIGS. **6**A-**7**B depict ceiling component **400** in accordance with the present inventions. The perimeter of ceiling component **400** is defined by first longitudinal ceiling edge **406**, first transverse ceiling edge **408**, second longitudinal ceiling edge **416** and second transverse ceiling edge **410**. In particular, (a) first

longitudinal ceiling edge **406**, (h) first transverse ceiling edge **408**, (c) second longitudinal ceiling edge **416** and (d) second transverse ceiling edge **410** of ceiling component **400** generally coincide with (i.e., overlie) (w) first longitudinal edge **106**, (x) first transverse edge **108**, (y) second longitudinal edge **116** and (z) second transverse edge **110**, respectively, of finished structure **150**. FIGS. **6**A and **6**B depict the ceiling component **400** of a type 1 structure **151**, and FIGS. **7**A and **7**B depict the ceiling component **400** of a type 2 structure **152**. The basic structure and design of ceiling component **400** is the same for both type 1 structure **151** and type 2 structure **152**, and are applicable to structures **150** generally, and is generally applicable to ceiling components **400** of structures **150** fabricated in accordance with this disclosure.

The length and width of ceiling component **400** can vary in accordance with design preference. In a particular embodiment of the type 1 structure **151** depicted in FIGS. **1**A and **2**A, ceiling component **400** (the dimension along first and second longitudinal edges **106**, **116**) is approximately thirty-nine feet (11.89 m) in length (the dimension along first and second longitudinal ceiling edges **406**, **416**) and approximately 19.5 feet (5.94 m) in width (the dimension along first and second transverse ceiling edges **408**, **410**). In a particular embodiment of the type 2 structure **152** depicted in FIGS. **1**B and **2**B, ceiling component **400** is approximately 19 feet (5.79 m) square.

It is preferred that ceiling component **400** utilize one of the multi-laminate designs described above in regard to FIGS. **4**A-**4**D, as described below.

The perimeter of ceiling component **400** is generally provided with exterior edge reinforcement. As exterior edge reinforcement for the embodiments of ceiling component **400** shown for a type 1 structure **151** in FIG. **6**B and for a type 2 structure **152** in FIG. **7**A, a first shoulder beam **435** is positioned at the first longitudinal ceiling edge **406** of ceiling component **400**, a second shoulder beam **435** (visible edge-on in FIG. **7**B) is positioned at the second transverse ceiling edge **408** of ceiling component **400**, a third shoulder beam **435** (visible edge-on in FIG. **7**B) is positioned at the first transverse exterior ceiling edge **410** of ceiling component **400**, and a fourth shoulder beam **435** is positioned at the second longitudinal ceiling edge **416** of ceiling component **400** (see FIG. **6**B). In the case floor component **400**, in addition to protecting the exterior edges of foam panel material, the exterior edge reinforcement provided by shoulder beams **435** assists in resisting vertical loads and transferring such loads to lower floors through underlying wall components **200** supporting ceiling component **400**, and then to the foundation of the finished structure **150**. Such exterior edge reinforcement can also provide a region for fastening like regions of abutting enclosure components **155** (underlying and any overlying).

The exterior edge reinforcement provided by shoulder beams **435** of ceiling component **400** can be fabricated from one or more of laminated strand lumber hoard, wooden board, C-channel extruded aluminum or steel, or the like. Alternatively, the enclosure component perimeter structures described below can be employed in addition to or in substitution for exterior edge reinforcement as just described for ceiling component **400**.

Ceiling Partitioning

The type 1 structure **151** and the type 2 structure **152** each includes ceiling portions **400***a*, **400***b* and **400***c*. Each of the ceiling portions **400***a*, **400***b* and **400***c* is a planar generally rectangular structure, with ceiling portion **400***a* adjoining ceiling portion **400***b*, and ceiling portion **400***b* adjoining ceiling portion **400***c* as exemplified by FIGS. **6**A and **6**B.

Ceiling Portion **400***c*. Ceiling portion **400***c* is generally exemplary of the construction of all ceiling portions **400***a*, **400***b* and **400***c*. Referring to the segment of ceiling portion **400***c* depicted in FIG. **6**C, ceiling portion **400***c* utilizes a laminated multi-layer design according to the first embodiment thereof (depicted in FIG. **4**A) or the second embodiment thereof (depicted in FIG. **4**B). As relevant here, ceiling portion **400***c* includes a first structural layer **210** of structural building panels **211**, denominated ceiling bottom surface **404**, and a second structural layer **215** of structural building panels **216**, denominated ceiling top surface **402**. Between ceiling surfaces **402** and **404** there are foam panels **214**, denominated ceiling foam panels **414**. Interior edge **412***c* of ceiling component **400***c* abuts a first interior edge **412***b* of ceiling component **400***b*, as shown in FIGS. **6**B and **7**A. For interior edge reinforcement, a reinforcing board **437** is positioned adjacent interior edge **412***c*.

Ceiling Portion **400***a*. Ceiling portion **400***a* is shown for example in FIGS. **6**B and **7**A. It is a mirror image in design and construction of ceiling portion **400***c*. Interior edge **412***a* of ceiling portion **400***a* abuts a second interior edge **412***b* of ceiling portion **400***b*, as shown in FIGS. **6**B and **7**A. For interior edge reinforcement, a reinforcing board **437** is positioned adjacent interior edge **412***a*.

Ceiling Portion **400***b*. Ceiling portion **400***b* shown in FIGS. **6**B and **7**A is the same in general design and construction as ceiling portions **400***a* and **400***c*. First interior edge **412***b* of ceiling component **400***b* abuts interior edge **412***c* of ceiling component **400***c*, and second interior edge **412***b* of ceiling component **400***b* abuts interior edge **412***a* of ceiling portion **400***a*. For interior edge reinforcement, a reinforcing board **437** is positioned adjacent first interior edge **412***b* of ceiling portion **400***b*, and a reinforcing board **437** is positioned adjacent second interior edge **412***b* of ceiling portion **400***b*.

Ceiling component **400** and its constituent elements are generally dimensioned in thickness and otherwise to accommodate the particular loads to which ceiling component **400** may be subject. A particular embodiment of ceiling component **400** in the type 2 structure **152** shown for example in FIGS. **7**A and **7**B can utilize the second multi-layer design embodiment (see FIG. **4**B) with 0.25 inch (0.635 cm) thick MgO board for structural building panels **211** of first structural layer **210**/ceiling bottom surface **404** and also for structural building panels **216** of second structural layer **211**/ceiling top surface **402**, and with binding strips of 0.25 inch (0.635 cm) thick MgO board six inches (15.24 cm) wide. The foam panels **214**/ceiling foam panels **414** can be 7.9 inches (20.07 cm) thick, yielding a roof component **400** approximately 8.4 inches (21.34 cm) thick. Additional structural members, such as joists, can be utilized as is appropriate to the specific design of structure **150** to assist in the transfer of vertical loads to one or more shoulder beams **435**.

Referring to the type 1 structure **151** shown in FIG. **6**B, ceiling portion **400***a* is fixed in position relative to first portions **200***b*-**1** of short wall components **200***b* and relative to long wall component **200***a*-R, and is joined with hinge structures along longitudinal interior edge **412***a* to the abutting longitudinal interior edge **412***b* of ceiling portion **400***b*. Such hinge structures are adapted to permit ceiling portion **400***b* to pivot through up to one hundred and eighty degrees (180°) of arc about a horizontal axis **405***a*, located proximate the top of ceiling component **400**, between a folded position, where ceiling portion **400***b* lies flat against ceiling portion **400***a*, and the fully unfolded position shown in FIG. **6**B.

In turn, ceiling portion **400***b* is joined with hinge structures to ceiling portion **400***c* at the longitudinal interior edge **412***b* of ceiling portion **400***b* abutting the longitudinal interior edge **412***c* of ceiling portion **400***c*. Such hinge structures are adapted to permit ceiling portion **400***c* to pivot through up to one hundred and eighty degrees (180°) of arc about a horizontal axis, located proximate the bottom of ceiling component **400**, between a folded position, where ceiling portion **400***c* lies flat against ceiling portion **400***b* (when ceiling portion **400***b* is positioned to lie flat against ceiling portion **400***a*), and the fully unfolded position shown in FIG. **6**B.

Likewise referring to the type 2 structure **152** shown in FIG. **7**A, ceiling portion **400***a* is fixed in position relative to first wall portion **200***s*-**1**, fourth wall portion **200***s*-**4** and wall component **200***s*-R. Ceiling portions **400***a*, **400***h* and **400***c* for type 2 structure **152** are joined with hinge structures in the same manner as described above in connection with type 1 structure **151**.

The hinge structures joining ceiling portions **400***a*, **400***b* and **400***c* can be surface mounted or recessed, and of a temporary or permanent nature. Suitable hinge structures can be fabricated for example of metal, plastic, leather, ferrous or non-ferrous material. The interior edge reinforcement provided by reinforcing boards **437** of ceiling portions **400***a*, **400***b* and **400***c* provides structure for mounting hinge structures, in addition to protecting the edges of foam panel material. Reinforcing boards **437** can be fabricated for example from one or more of laminated strand lumber board, wooden board, C-channel extruded aluminum or steel, or the like.

A suitable hinge structure and its associated members is shown in FIG. **9**, which depicts an exemplary hinge structure joining ceiling portions **400***b* and **400***c*. In particular, a plurality of double hinges **413** are arranged in line along horizontal axis **405***b*. Double hinges are preferred to permit the hinges to be recessed below the surface, while retaining the ability to pivot through up to one hundred eighty degrees (180°) of arc, without causing interference crimping between adjacent ceiling portions. These double hinges can be fabricated by positioning together in an abutting relationship two single hinges, each along one of their respective leaves, and welding them to fashion one double hinge **413**.

As shown in FIG. **9**, each of the free leaves of double hinge **413** are respectively secured to a reinforcing board **437**. Each reinforcing board **437** is positioned against the exterior of the web of a C-channel track **308** (fabricated from cold formed steel), each of which in turn is secured to the respective abutting edges of roof portions **400***b* and **400***c*, as shown in FIG. **9**. The same hinge structure can be utilized to secure together ceiling portions **400***a* and **400***b*, although rotated 180 degrees and displaced to be arranged in line along horizontal axis **405***a*, so as to permit the ceiling portions **400***b* and **400***c* to fold in an accordion pattern, as shown in FIGS. **3**A and **3**B

The enclosure component perimeter structures described below which include hinge structures provide further alternatives to the hinge structure depicted in FIG. **7**B, particularly the second hinged I-beam structure **268** depicted in FIGS. **14**A-**14**F. Such enclosure component perimeter structures can be employed in addition to or in substitution for the interior edge reinforcement provided by reinforcing boards **437** of ceiling portions **400***a*, **400***b* and **400***c*.

Utility Service System and Ceiling Chases. Ceiling component **400** can be provided with a utility service system **460**, which is one or more recessed passageways of closed loop form, located about the entirety of the periphery of ceiling component **400** proximate to the shoulder beams **435** included in those ceiling portions **400***a*, **400***b* and **400***c*, to facilitate routing of utility lines (such as for electrical power, lighting control, HVAC, HVAC control, security systems, including energizing and communicating with smoke or heat sensors, etc.). FIGS. **6**A and **6**B show one embodiment of utility service system **460** (denominated **461** in those figures), and FIGS. **7**A and **7**B show another embodiment of utility service system **460** (denominated **462** in those figures). For the same purpose, ceiling component **400** can also be provided with ceiling chases **440**, which are a plurality of elongate spaced-apart cylindrical passages in ceiling portions **400***a*, **400***b* and **400***c*. The utility service system **460** is adapted to communicate with both the ceiling chases **440** and wall chases **219**. Further details concerning utility service system **460** and ceiling chases **440** for ceiling component **400** are described in U.S. Nonprovisional patent application Ser. No. 16/786,130 entitled "Foldable Building Structures with Utility Channels and Laminate Enclosures," having the same inventors and filed on the same date as the subject application. The contents of that U.S. Nonprovisional patent application Ser. No. 16/786,130 entitled "Foldable Building Structures with Utility Channels and Laminate Enclosures," having the same inventors and filed on the same date as the subject application, are incorporated by reference as if fully set forth herein, particularly the details relating to utility service system **460** and wall chases **440**, found for example at paragraphs 0102-0120 and in FIGS. 6A-7E thereof.

Floor Component (**300**)

Typically, a finished structure **150** will utilize one floor component **300**; thus floor component **300** generally is the full floor of finished structure **150**. Floor component **300** has a generally rectangular perimeter. FIGS. **6**A-**6**B and **7**A-**7**B depict floor component **300** in accordance with the present inventions. The perimeter of floor component **300** is defined by first longitudinal floor edge **117**, first transverse floor edge **120**, second longitudinal floor edge **119** and second transverse floor edge **118**. In particular, (a) first longitudinal floor edge **117**, (b) first transverse floor edge **120**, (c) second longitudinal floor edge **119** and (d) second transverse floor edge **118** generally coincide with (i.e., underlie) (w) first longitudinal edge **106**, (x) first transverse edge **108**, (y) second longitudinal edge **116** and (z) second transverse edge **110**, respectively, of finished structure **150**. FIGS. **6**A and **6**B depict the floor component **300** for a type 1 structure **151**, and FIGS. **7**A and **7**B depict the floor component **300** for a type 2 structure **152**. The basic structure of floor component **300** is the same for both type 1 structure **151** and type 2 structure **152**, and is generally applicable to floor components **300** of structures **150** fabricated in accordance with this disclosure.

The length and width of floor component **300** can vary in accordance with design preference. In the particular embodiment of the type 1 structure **151** depicted in FIGS. **1**A and **2**A, where wall components **200***a*, **200***b* are vertically oriented, the length and width of ceiling component **400** approximates the length and width of ceiling component **400** for that type 1 structure. Likewise in the particular embodiment of the type 2 structure **152** depicted in FIGS. **1**B and **2**B, where wall components **200***s* are vertically oriented, the length and width of ceiling component **400** approximates the length and width of ceiling component **400** for that type 2 structure.

It is preferred that floor component **300** utilize one of the multi-laminate designs described above in regard to FIGS. **4**A-**4**D, as described below.

The perimeter of each floor component **300** is generally provided with exterior edge reinforcement. As exterior edge reinforcement for the embodiments of floor component **300** shown in FIGS. **7**A and **7**B, a first footing beam **320** (visible edge-on in FIG. **7**A) is positioned at the first longitudinal floor edge **117** of floor component **300**, a second footing beam **320** (visible edge-on in FIG. **7**B) is positioned at the second transverse floor edge **118** of floor component **300**, a third footing beam **320** (visible edge-on in FIG. **7**B) is positioned at the first transverse floor edge **120** of floor component **300**, and a fourth footing beam **320** is positioned at the second longitudinal floor edge **119** of floor component **300** (visible edge-on in FIG. **7**A). In the case floor component **300**, the edge reinforcement provided by footing beams **320** assists in resisting vertical loads and transferring such loads to any ceiling component **400** thereunder and then to underlying wall components **200**, and/or to the foundation of the finished structure **150**, in addition to protecting the edges of foam panel material.

The exterior edge reinforcement provided by footing beams **420** of floor component **300** can be fabricated from one or more of laminated strand lumber board, wooden board, C-channel extruded aluminum or steel or the like. Alternatively, enclosure component perimeter structures described below can be employed in addition to or in substitution for exterior edge reinforcement of the type just described for floor component **300**.

Floor Partitioning

The floor component **300** in type 1 structure **151** and in type 2 structure **152** comprises floor portion **300***a* and floor portion **300***b*. Each of the floor portions **300***a* and **300***b* is a planar generally rectangular structure, with floor portion **300***a* adjoining floor portion **300***b*, as exemplified by FIGS. **6**A, **6**B and **7**A.

Floor Portion **300***a*. Floor portion **300***a*, shown in FIGS. **6**A, **6**B and **7**A, is generally exemplary of the construction of floor portions **300***a* and **300***b*, and as depicted generally utilizes a laminate multi-layer design in accordance with the first or second embodiment thereof respectively illustrated in FIGS. **4**A and **4**B. As relevant here, floor portion **300***a* includes a first structural layer **210** of structural building panels **211**, denominated floor bottom surface **304** and a second structural layer **215** of structural building panels **216**, denominated floor top surface **302**. Between floor surfaces **302** and **304** there are foam panels **214**, denominated floor foam panels **314**. Interior edge **301***a* of floor portion **300***a* abuts interior edge **301***b* of floor portion **300***b*, as shown in FIG. **9**A. As interior edge reinforcement, a reinforcing board **307** is positioned adjacent interior edge **301***a*.

Floor Portion **300***b*. Floor portion **300***b* is shown for example in FIGS. **6**A, **6**B and **7**A. It is the same in general design and construction as floor portion **300***a*. Interior edge **301***b* of floor portion **300***b* abuts interior edge **301***a* of floor portion **300***a*, as shown in FIG. **7**A. As interior edge reinforcement, a reinforcing board **307** is positioned adjacent interior edge **301***b*.

Floor component **300** and its constituent elements are generally dimensioned in thickness and otherwise to accommodate the particular loads to which floor component **300** may be subject. A particular embodiment of floor component **300** for the type 2 structure **152** shown for example in FIGS. **7**A and **7**B can utilize the second multi-layer design embodiment (see FIG. **4**B) with 0.25 inch (0.635 cm) thick MgO board for structural building panels **211** of first structural layer **210**/floor bottom surface **304**, and 0.5 inch (1.27 cm) thick MgO board for structural building panels **216** of second structural layer **211**/floor top surface **302**. Correspondingly in this particular embodiment, binding strips of 0.25 inch (0.635 cm) thick MgO board six inches (15.24 cm) wide are used to join together the structural building panels **211** of first structural layer **210**/floor bottom surface **304**, and binding strips of 0.5 inch (1.27 cm) thick MgO board six inches (15.24 cm) wide are used to join together the structural building panels **216** of second structural layer **211**/floor top surface **302**. The foam panels **214**/floor foam panels **314** can be 11.25 inches (28.575 cm) thick, yielding a floor component **300** approximately 12 inches (30.48 cm) thick.

The floor portion **300***b* comprising floor component **300** can be folded to facilitate forming a compact shipping module. The type 1 structure **151** and the type 2 structure **152** each includes such a floor portion.

Referring to the type 1 structure **151** shown in FIG. **6**B, floor portion **300***a* is fixed in position relative to first wall portions **200***b*-**1** of short wall components **200***b* and relative to long wall component **200***a*-R, and is joined with hinge structures to floor portion **300***b*, so as to permit floor portion **300***b* to pivot through approximately ninety degrees (90°) of arc about a horizontal axis **305**, located proximate floor top surface **302**, between a folded position, where floor portion **300***b* is approximately vertically oriented as shown in FIG. **3**A, and the fully unfolded position shown in FIGS. **6**A and **6**B.

Likewise referring to the type 2 structure **152** shown in FIG. **7**A, floor portion **300***a* is fixed in position relative to first wall portion **200***s*-**1**, fourth wall portion **200***s*-**4** and wall component **200***s*-R. Floor portion **300***a* is joined with hinge structures to floor portion **300***h* in the same manner as described above in connection with type 1 structure **151**.

The hinge structures joining floor portions **300***a* and **300***b* can be surface mounted or recessed, and of a temporary or permanent nature. Suitable hinge structures can be fabricated for example of metal, plastic, leather, ferrous or non-ferrous material. An example of a suitable hinge structure and its associated members is shown in FIG. **8**. In particular, a plurality of steel hinges **306**, for example approximately three inches (7.62 cm) wide by approximately six inches (15.24 cm) long, are arranged in line along horizontal axis **305**, as shown edge-on in FIG. **8**. Such hinges are commercially available from McMaster-Carr, Douglasville, Ga. USA. The hinge structures joining floor portions **300***a* and **300***b* need not be double hinges, since they need to pivot only through approximately ninety degrees (90°) of arc, and thus the potential for interference crimping is less than in connection with the ceiling portions of ceiling component **400**.

As shown in FIG. **8**, the opposing leaves of hinges **306** are respectively secured to the interior edge reinforcement, reinforcing board **307**, provided at each of interior edges **301***a* and **301***b*. Reinforcing boards **307** in FIG. **8** are made of laminated strand lumber. Each reinforcing board **307** is positioned against the exterior of the web of a C-channel track **308** (fabricated from cold formed steel), each of which in turn is secured to the respective abutting edges of floor portions **200***a* and **200***h*, as shown in FIG. **8**.

The enclosure component perimeter structures described below which include hinge structures provide further alternatives to the hinge structure shown in FIG. **8** for joining floor portions **300***a* and **300***b*, particularly the first hinged I-beam structure **258** depicted in FIGS. **13**A-**13**F. Such enclosure component perimeter structures can be utilized in addition to or in place of interior edge reinforcement, as described above.

Baseboard and Perimeter Board. The exterior edges of floor component **300**, or portions thereof, such as the exte-

rior edge of floor portion **300***b* located along first longitudinal edge **106** of finished structure **150**, can be provided with a baseboard **310**. In the type 1 structure **151** shown for example in FIG. **3**A, a baseboard **310** is shown edge-on secured to the exterior edge of floor portion **300***b*. Where baseboard **310** extends around the perimeter of floor component **300**, it is termed perimeter hoard **312**. The type 2 structure **152** shown for example in FIGS. **1**B and **3**B utilizes a perimeter board **312**. It is preferred that the vertical dimension (height) of baseboard **310** (including perimeter board **312**) be greater than the thickness of floor component **300**.

Floor Chases. Optionally, the floor foam panels **314** in floor component **300** can be provided with floor chases **319**, which are a plurality of elongate spaced-apart cylindrical passages in floor portions **300***a* and **300***b*, to facilitate routing of utility lines (such as for electrical power, lighting control, HVAC, HVAC control, security systems, including energizing and communicating with smoke or heat sensors, etc.). Such floor chases **319** are adapted to communicate with wall chases **219** (see FIGS. **7**A and **7**B). Further details concerning floor chases **319** for floor component **300** are described in U.S. Nonprovisional patent application Ser. No. 16/786,130 entitled "Foldable Building Structures with Utility Channels and Laminate Enclosures," having the same inventors and filed on the same date as the subject application. The contents of that U.S. Nonprovisional patent application Ser. No. 16/786,130 entitled "Foldable Building Structures with Utility Channels and Laminate Enclosures," having the same inventors and filed on the same date as the subject application, are incorporated by reference as if fully set forth herein, particularly the details relating to floor chases **319**, found for example at paragraphs 0137-0141 and in FIG. 7F thereof.

Enclosure Component Perimeter Structures

The perimeter (exterior edges) of each enclosure component **155** (wall components **200**, floor components **300**, ceiling components **400**), as well as any interior edges of partitioned enclosure components **155**, preferably are bound by an enclosure component perimeter structure. The enclosure component perimeter structure to be utilized can vary depending upon the particular circumstances and preferences, as described in more detail below.

Sealing Layer

A sealing gasket strip or layer, made for example from extruded polyvinyl chloride (PVC), can optionally be bonded as desired to select edges of enclosure components **155**, such as about the periphery of a wall component **200** to floor plate **220**, end pieces **270** and ceiling plate **240**. The gasket strip or layer can be coextruded with one or plural sealing beads or ridges located proximate the middle of the strip or layer and oriented along the length of the strip or layer, and having a lower Durometer hardness than the strip or layer material. Such a sealing strip or layer performs a sealing function against water ingress into and environmental exposure of the edge of the enclosure component **155** to which it is secured.

Free-Standing End Cap (**221**)

Free-standing end cap **221**, shown edge-on in profile in FIG. **10**, generally has a C-channel shape of a length "L", with L being approximately the length of the edge of the planar enclosure component **155** to which free-standing end cap **221** is to be secured. Free-standing end cap **221** has two spaced-apart elongate flange surfaces **222** joined by an elongate web surface **223** to define the C-channel. The particular profile of the C-channel of free-standing end cap **221** can vary as desired to include such thickness variations, ridges and/or grooves as are appropriate for the intended application.

In the case of securing free-standing end cap **221** to a planar enclosure component **155** comprising two structural layers separated by a filler material, such as foam panels, flange surfaces **222** are spaced apart by a distance approximately equal to the thickness of the foam panels of the planar enclosure component **155** over which free-standing end cap **221** will be positioned and to which it will be secured. Preferably, free-standing end cap **221** is made of a high-impact material, such as polyvinyl chloride (PVC) having a high Durometer hardness extruded and then cut into sections of length L to form free-standing end cap **221**.

Free-standing end cap **221** preferably is secured to the desired edge locations of one or more enclosure components **155** in the course of fabricating the enclosure component **155** in a factory or workshop prior to shipment to the building site. For example, where planar enclosure component **155** comprises two structural layers separated by foam panels, a free-standing end cap **221** having a length L approximately equal to the length of the edge in question of enclosure component **155** is positioned over the edge of the foam panels, such that web surface **223** abuts or is closely proximate to the edge of the foam. The two structural layers are then positioned over the foam to overlap a major portion of the flange surfaces **222**, with locating ridge **229** positioned on the exterior of each flange surface **222** assisting in proper overlap and alignment of the structural layers. Free-standing end cap **221** can be secured in place for example by adhesive applied between the overlapping regions of free-standing end cap **221** and the enclosure component **155**, or by fasteners, such as screw or nail fasteners, spaced apart along the length of one or more of flange surfaces **222** and web surface **223**, and driven therethrough into the enclosure component **155**, or by utilizing a combination of adhesive and fasteners in any manner as just described, or otherwise. Free-standing end cap **221** performs a sealing function against water ingress into and environmental exposure of the edge of the enclosure component **155** to which it is secured.

Reinforced End Cap (**224**)

The edge of the planar enclosure component **155** to which free-standing end cap **221** is to be secured can be provided with exterior edge reinforcement fabricated from one or more of laminated strand lumber board, wood, C-channel extruded aluminum or steel, or the like, secured to the exterior edges of the enclosure component **155**, as described previously. Alternatively, the edge of the planar enclosure component **155** to which free-standing end cap **221** is to be secured can in appropriate circumstances terminate with a foam panel **214**, without provision of such exterior edge reinforcement.

As another alternative, it is possible to integrate exterior edge reinforcement into the end cap, thereby combining the sealing and edge reinforcement functions. Referring to FIG. **11**, there is shown edge-on in profile a reinforced end cap **224**, which is used in lieu of free-standing end cap **221**. Reinforced end cap **224** generally has a C-channel shape of a length "L", with L being approximately the length of the edge of the planar enclosure component **155** to which free-standing end cap **221** is to be secured. Reinforced end cap **224** has two spaced-apart elongate flange surfaces **225** joined by an elongate web surface **226** to define the C-channel. In the case of securing a reinforced end cap **224** to a planar enclosure component **155** comprising two structural layers separated by a filler material, such as foam panels, flange surfaces **225** are spaced apart by a distance approxi-

mately equal to the thickness of the foam panels of the planar enclosure component **155** over which reinforced end cap **224** will be positioned and to which it will be secured. As was the case with free-standing end cap **221**, the particular profile of the C-channel of reinforced end cap **224** can vary as desired to include such thickness variations, ridges and/or grooves as are appropriate for the intended application.

Reinforced end cap **224** includes a reinforcement channel **228**, shown edge-on in profile in FIG. **11**, for providing additional structural rigidity. In particular, reinforcement channel **228** is a four sided closed space, having a generally rectangular configuration in cross-section, and is defined by a cavity wall **227** spaced from web surface **226**, which is oriented generally parallel to web surface **226** and spans the distance between flange surfaces **225**.

Where even further structural reinforcement is desired, filler reinforcement can be inserted into or formed in reinforcement channel **228**. Filler reinforcement can comprise rectangular or other suitably-shaped laminated strand lumber board, wood, aluminum or steel inserts or sleeves, or expanded foam, concrete or even reinforced concrete or other materials. As a further example of filler reinforcement, the scrap foam and/or scrap MgO board that may be a by-product of the fabrication of enclosure components **155** can be further cut to suitable sizes to serve as inserts or sleeves, or can be cut into pieces and mixed with epoxy adhesive to form a slurry, which is then poured into reinforcement channel **228**. Upon drying this material provides a suitable medium for retaining fasteners used to secure the enclosure components in place relative to each other.

In general, use of reinforcement channel **228**, either without or with further filler reinforcement as just described, can reduce or eliminate any need for positioning and securing exterior edge reinforcement to the edge of the planar enclosure component **155** to which reinforced end cap **224** is to be secured.

Preferably, reinforced end cap **224** is made of a high-impact material, such as polyvinyl chloride (PVC) having a high Durometer hardness extruded and then cut into sections of length L to form reinforced end cap **224**.

Reinforced end cap **224** preferably is secured to the desired edge locations of one or more enclosure components **155** in the course of fabricating the enclosure component **155** in a factory or workshop prior to shipment to the building site. For example, where planar enclosure component **155** comprises two structural layers separated by foam panels, a reinforced end cap **224** having a length L approximately equal to the length of the edge in question of enclosure component **155** is positioned over the edge of the foam panels, such that cavity wall **227** abuts or is closely proximate to the edge of the foam. The two structural layers are then positioned over the foam to overlap a major portion of the flange surfaces **225**, with locating ridge **229** positioned on the exterior of each flange surface **222** assisting in proper overlap and alignment of the structural layers. Reinforced end cap **224** can be secured in place for example by adhesive applied between the overlapping regions of reinforced end cap **224** and the enclosure component **155**, or by fasteners, such as screw or nail fasteners, spaced apart along the length of one or more of flange surfaces **225**, and driven therethrough into the enclosure component **155**, or by utilizing a combination of adhesive and fasteners in any manner as just described, or otherwise. As indicated above, reinforced end cap **224** performs both an edge reinforcement function and a sealing function against water ingress into and environmental exposure of the edge of the enclosure component **155** to which it is secured.

Although described in detail in connection with reinforced end cap **224**, the other enclosure component perimeter structures described below (abutting end cap **235**, first hinged I-beam structure **258**, second hinged I-beam structure **268**, tongue-and-groove hinged structure **242**) can also utilize a like reinforcement structure (with and without filler reinforcement), namely a cavity wall spaced from an elongate web, where the cavity wall is oriented generally parallel to the web and spans the distance between the associated elongate flanges to define a reinforcement channel having a generally closed rectangular configuration in cross-section.

Abutting End Cap (**235**)

Abutting end cap **235**, shown edge-on in profile in FIG. **12**, generally has a C-channel shape of a length "L", where L is the length of the edge of the enclosure component **155** to which end cap **235** is to be secured. Abutting end cap **235** has two spaced-apart elongate flange surfaces **236** and an elongate web surface **237**, which generally define the C-channel. The particular profile of the C-channel of abutting end cap **235** can vary as desired to include such thickness variations, ridges and/or grooves as are appropriate for the intended application. In the case of securing abutting end cap **235** to a planar enclosure component **155** comprising two structural layers separated by foam panels, flange surfaces **236** are spaced apart by a distance approximately equal to the thickness of the foam panels of the planar enclosure component **155** over which abutting end cap **235** will be positioned and to which it will be secured. Preferably, abutting end cap **235** is made of a high-impact material, such as polyvinyl chloride (PVC) having a high Durometer hardness extruded and then cut into sections of length L to form abutting end cap **235**.

Web surface **237** of abutting end cap **235** is not joined directly to each of flange surfaces **236**. Rather, an inclined fastener shelf **239** shown in FIG. **12** is interposed between each flange surface **236** and web surface **237**. Fastener shelves **239** allow a plurality of spaced-apart fasteners, such as nails or screw fasteners, to be driven down through abutting end cap **235** into a planar enclosure component **155** that may abut web surface **237**, and thereby fasten abutting end cap **235** to the planar enclosure component **155**. The regions of each flange surface **236** proximate to fastener shelf **239** are canted inward toward each other, at a select angle as shown in FIG. **12**, so as to provide access to fastener shelves **239** while lowering the width across web surface **237** and thereby reduce the footprint of abutting end cap **235**, as compared to the situation of positioning fastener shelves **239** outward from fully-planar flange surfaces **236**. It is preferred that the regions of each flange surface **236** proximate to fastener shelf **239** be canted inward toward each other at approximately thirty degrees (30°) from the plane of the flange surface **236** to which it is proximate, and that each fastener shelf **239** be inclined at approximately sixty degrees (60°) from the plane of the flange surface to which it is proximate.

Abutting end cap **235** performs a sealing function against water ingress into and environmental exposure of the edge of the enclosure component **155** to which it is secured. In addition, abutting end cap **235** can also provide a sealing function against water ingress across its boundary with an abutting enclosure component **155**. Thus as shown in FIG. **12**, the exterior of web surface **237** can be provided with plural receiving slots **241** for receiving sealing heads **234**, in order to form a water-resistant seal between web abutting end cap **235** and an abutting planar enclosure component. In

an alternative embodiment, the sealing beads are coextruded with abutting end cap **235** at locations that approximate the locations of receiving slots **241**.

Abutting end cap **235** preferably is secured to the desired edge locations of one or more enclosure components **155** in the course of fabricating the enclosure component(s) **155** in a factory or workshop prior to shipment to the building site. For example, where planar enclosure component **155** comprises two structural layers separated by foam panels, an abutting end cap **235** having a length "L" approximately equal to the length of the edge in question of enclosure component **155** is positioned over the edge of the foam panels, such that web surface **237** abuts or is closely proximate to the edge of the foam. The two structural layers are then positioned over the foam to overlap a major portion of the flange surfaces **236**. As shown in FIG. **12**, a locating ridge **229** is positioned on the exterior of each flange surface **236** assisting in proper overlap and alignment of the structural layers. Abutting end cap **235** can be secured to the enclosure component **155** for example by adhesive applied between the overlapping regions of abutting end cap **235** and the enclosure component **155**, or by fasteners, such as screw or nail fasteners, spaced apart along the length of one or more of flange surfaces **236** and web surface **237**, and driven therethrough into the enclosure component **155**, or by utilizing a combination of adhesive and fasteners in any manner as just described, or otherwise.

First Hinged I-Beam Structure (**258**)

First hinged I-beam structure **258** is shown in FIGS. **13**A-**13**F. It provides means for pivotally attaching two adjacent enclosure components **155**, or two adjacent portions of an enclosure component **155**, so that one can pivot through at least up to ninety degrees (90°) of arc relative to the other. First hinged I-beam structure **258** can also provide a sealing function against water ingress into and environmental exposure of the edges of the two adjacent enclosure components **155**, or the two adjacent portions of an enclosure component **155**, to which it is secured, and can provide a sealing function to prevent water ingress across the boundary between those two edges.

First hinged I-beam structure **258** comprises a first elongate perimeter section **259** of length "L" and a second elongate perimeter section **263** also of length "L," where L is the length of each of the edges of the enclosure components **155** on which first perimeter section **259** and second perimeter section **263** will be respectively secured in order to pivotally join those sections together.

In particular, FIG. **13**A shows first perimeter section **259** of first hinged I-beam structure **258** edge-on in profile. First perimeter section **259** is defined by two spaced-apart elongate flange surfaces **260** and an elongate web surface **261**. One of the flange surfaces **260**, flange surface **260***a*, is joined to web surface **261** at a first junction and the other of the flange surfaces **260**, flange surface **260***b*, is joined to web surface **261** at a second junction. Where the first perimeter section **259** is to be secured to a planar enclosure component **155** comprising two structural layers separated by foam panels, the width of web surface **261** (the distance separating flange surfaces **260***a* and **260***h*) is somewhat greater than the thickness of the foam panels of the enclosure component **155** to which it will be secured, as particularized further below. First perimeter section **259** approximately forms a C-channel in cross-section.

Comparable to first perimeter section **259**, second perimeter section **263** (shown in FIG. **13**A edge-on in profile) of first hinged I-beam structure **258** is defined by two spaced-apart elongate flange surfaces **264** and an elongate web surface **265**. One of the flange surfaces **264**, flange surface **264***a*, is joined to web surface **265** at a third junction and the other of the flange surfaces **264**, flange surface **264***b*, is joined to web surface **265** at a fourth junction. Where the second perimeter section **263** is to be secured to a planar enclosure component **155** comprising two structural layers separated by foam panels, the width of web surface **265** (the distance separating flange surfaces **264***a* and **264***b*) is somewhat greater than the thickness of the foam panels of the enclosure component **155** to which it will be secured, as particularized further below. Second perimeter section **263** approximately forms a C-channel in cross-section. It is preferred that first and second perimeter sections **259** and **263** each have approximately the same shape and dimensions.

As shown in FIGS. **13**A-**13**F, first perimeter section **259** has a first series of hinge knuckles **267***a* of length L in proximity to the first junction of flange surface **260***a* and web surface **261**, and a second series of hinge knuckles **267***b* of length L in proximity to the second junction of flange surface **260***b* and web surface **261**. It is preferred that the geometry of hinge knuckles **267***a* and **267***b* be the same as each other. Likewise second perimeter section **263** has a first series of hinge knuckles **266***a* in proximity to the third junction of flange surface **264***a* and web surface **265**, and a second series of hinge knuckles **266***b* in proximity to the fourth junction of flange surface **264***b* and web surface **265**. It is preferred that the geometry of hinge knuckles **266***a* and **266***b* be the same as each other, and also the same as hinge knuckles **267***a* and **267***b*. It is specifically preferred that the hinge knuckles **267***a* and **267***b* of first perimeter section **259** each be of length D and be spaced-apart the same distance D, and it is specifically preferred that the hinge knuckles **266***a* and **266***b* of second perimeter section **263** also be of length D and be spaced-apart the same distance D. FIG. **13**D depicts the hinge knuckle arrangement of second perimeter section **263** having a length L. As shown in that figure, each of the hinge knuckles **267***a* is in an overlying relationship (vertically aligned) with a respective hinge knuckle **267***b*, and each of the spaces between an adjacent pair of hinge knuckles **267***a* is in an overlying relationship (vertically aligned) with a respective space between an adjacent pair of hinge knuckles **267***b*.

As shown in FIGS. **13**B and **13**E, hinge knuckles **267***a* and **266***a* are intermeshed and joined by a first series of linearly arranged cylindrical steel rods **233** of aggregate length L to form a pivotable junction between first perimeter section **259** and second perimeter section **263**. This pivotable junction enables first hinged I-beam structure **258** to rotate through at least ninety degrees (90°) of arc to a fully open (unfolded) position, as shown in FIGS. **13**C and **13**F. The hinge knuckles **266***b* and **267***b* are positioned so that hinge knuckles **266***b* and **267***b* intermesh when first hinged I-beam structure **258** is fully open. When so intermeshed, a second series of linearly arranged cylindrical steel rods **233** of aggregate length L can be passed through hinge knuckles **267***b* and **266***b* to lock second hinged I-beam structure **258** in the fully opened position, as shown in FIGS. **13**E-**13**F.

It is preferred that the first series of linearly arranged cylindrical steel rods **233** be joined end-to-end by threaded connections, so that the steel rods **233** act as a single continuous rod that better resists tensile loading. It is also preferred that the second series of linearly arranged cylindrical steel rods **233** be joined in like manner. In one embodiment of first hinged I-beam structure **258**, the first

and second series of linearly arranged cylindrical steel rods **233** have a diameter of approximately 0.625 inch (1.5875 cm).

The design of first and the second perimeter sections **259** and **263** are such that the web surfaces **261** and **265** are in contact when first hinged I-beam structure **258** is fully open, as shown in FIGS. **13**C and **13**F. This contacting relationship assists in weather-sealing the structure. In furtherance of this objective and as shown for example in FIG. **13**A, the exterior face of each of web surfaces **261** and **265** can be provided with plural receiving slots **241** for receiving a sealing bead (not shown), in order to form a water-resistant seal between the web surfaces. In an alternative embodiment, the sealing beads can be coextruded with at the same time as the perimeter section itself, at locations that approximate the locations of receiving slots **241**. As a general matter, the particular profile of the C-channel of first and second perimeter sections **259** and **263** can vary as desired to include such thickness variations, ridges and/or grooves as are appropriate for the intended application.

First and second perimeter sections **259** and **263** of first folding I-beam structure **258** be fabricated by an extrusion process, such as pultrusion, in which a suitable material (fiberglass reinforced polymer plastic, in the case of pultrusion) is drawn through an appropriately-shaped die to form a work piece generally having the web/flange structure of the perimeter sections. As part of the drawing process, cylindrical conduits can be formed in the work piece proximate the intended locations for the first/third and second/fourth junctions, following which sections of length D can be machined into the conduits at spaced-apart intervals of length D to form a series of hinge knuckles. Alternatively, the work piece can be drawn without such cylindrical conduits, following which tubular sections of length D are secured at spaced-apart intervals of length D to form the series of hinge knuckles. After drawing, the work piece is sectioned into sectioned work pieces of length L to yield the desired perimeter sections of first folding I-beam structure **258**. Where first and second perimeter sections **259** and **263** have the same geometry, as is preferred, the sectioned work pieces are interchangeable and can serve as one or the other of first and second perimeter sections **259** and **263**. However, in pairing any two work pieces to form a first folding I-beam structure **258**, it is necessary to take into account their interlaced relationship; thus for example, when sectioning two work pieces into perimeter sections of length L having hinge knuckles of length D spaced-apart at intervals of length D, a first of the two can be sectioned at a point where a hinge knuckle starts, and in accordance therewith the second of the two should be sectioned at a point where a spaced-apart interval of length D starts.

First folding I-beam structure **258** can be secured to two adjacent enclosure components **155**, or to two adjacent portions of an enclosure component **155**, that are intended to have a folded relationship in shipping module **100**. In FIG. **13**C, the two adjacent enclosure components **155** are denominated **155***a* and **155***b*; and as depicted, each enclosure component **155***a*, **155***b* has a first structural layer **210***a*, **210***b* respectively, a foam panel **214***a*, **214***b* respectively, and a second structural layer **215***a*, **215***b* respectively. First folding I-beam structure **258** has a length "L" (L being approximately equal to the length of the edges in question of the two adjacent enclosure components **155***a* and **155***b*). As seen in FIG. **13**C, first and second perimeter sections **259** and **263** are dimensioned to capture between their respective flange surfaces **260**, **264** the foam panels **214***a*, **214***b* of the respective enclosure components **155***a*, **155***b*, such that web surfaces **261** and **265** abut or are closely proximate to the edges of foam panels **214***a*, **214***b*, respectively. The adjacent first structural layers **210***a* and **210***h* are then respectively positioned to overlap a major portion of the upper flange surfaces **260**, **264**, with locating ridges **229**, positioned on those upper flange surface as shown in FIG. **13**C, assisting in proper alignment and overlap of first structural layers **210***a*, **210***b*. In turn, where lower flange surfaces **260** and **264** are intended to capture the adjacent second structural layers **215***a*, **215***b* of enclosure components **155***a*, **155***b*, as in FIG. **13**C, locating ridges **229** on lower flange surfaces **260**, **264** need not be provided.

First and second perimeter sections **259** and **263** can each be secured to the respective enclosure components **155** for example by adhesive applied between the overlapping regions of first and second perimeter sections **259** and **263** and the respective enclosure components **155**, or by fasteners, such as screw or nail fasteners, spaced apart along the length of one or more of flange surfaces **260**, **264** and web surfaces **261** and **265**, and driven therethrough into the respective enclosure component **155**, or by utilizing a combination of adhesive and fasteners in any manner as just described, or otherwise. Once secured to their respective enclosure components **155**, the relevant components can be rotated to a fully folded state to form shipping module **100**, and also rotated to a fully unfolded state upon finishing structure **150** at its intended location.

Second Hinged I-Beam Structure (**268**)

Second hinged I-beam structure **268** is shown in FIGS. **14**A-**14**F. It provides means for pivotally attaching two adjacent enclosure components **155**, or two adjacent portions of an enclosure component **155**, so that one can pivot through up to one hundred and eighty degrees (180°) of arc relative to the other, without causing interference crimping between adjacent components or portions. Second hinged I-beam structure **268** can also provide a sealing function against water ingress into and environmental exposure of the edges of the two adjacent enclosure components **155**, or the two adjacent portions of an enclosure component **155**, to which it is secured, and can provide a sealing function to prevent water ingress across the boundary between those two edges.

Second hinged I-beam structure **268** comprises a first elongate perimeter section **269** (shown edge-on in profile in FIG. **14**A) of length "L" and a second elongate perimeter section **274** also of length "L", where L is the length of each of the edges of the enclosure components **155** on which first perimeter section **269** and second perimeter section **274** will be respectively positioned in order to pivotally join those sections together.

In particular, referring to FIG. **14**A, first perimeter section **269** of second hinged I-beam structure **268** is defined by two spaced-apart elongate flange surfaces **271** and an elongate web surface **272**. One of the flange surfaces **271**, flange surface **271***a*, is joined to web surface **272** at a first junction and the other of the flange surfaces **271**, flange surface **271***b*, is joined to web surface **272** at a second junction. In the case of securing first perimeter section **269** to a planar enclosure component **155** comprising two structural layers separated by foam panels, flange surfaces **271***a*, **271***b* are spaced apart by a distance approximately equal to the thickness of the foam panels of the planar enclosure component **155** over which first perimeter section **269** will be positioned and to which it will be secured, so that first perimeter section **269** thereby forms a C-channel in cross-section.

Comparable to first perimeter section **269**, second perimeter section **274** (shown edge-on in profile in FIG. **14**A) of

second hinged I-beam structure **268** is defined by two spaced-apart elongate flange surfaces **277** and an elongate web surface **278**. One of the flange surfaces **277**, flange surface **277***a*, is joined to web surface **278** at a third junction and the other of the flange surfaces **277**, flange surface **277***b*, is joined to web surface **278** at a fourth junction. In the case of securing second perimeter section **274** to a planar enclosure component **155** also comprising two structural layers separated foam panels, flange surfaces **277***a*, **277***b* are spaced apart by a distance approximately equal to the thickness of the foam panels of the planar enclosure component **155** over which second perimeter section **274** will be positioned and to which it will be secured, so that second perimeter section **74** thereby forms a C-channel in cross-section. It is preferred that first and second perimeter sections **269** and **274** each have approximately the same shape and dimensions.

As shown in FIGS. **14**E and **14**F, first perimeter section **269** has a first series of hinge knuckles **273***a* of length L in proximity to the first junction of one of the flange surfaces **271** and web surface **272**, and a second series of hinge knuckles **273***b* of length L formed in proximity to the second junction of one of the flange surfaces **271** and web surface **272**. It is preferred that the geometry of hinge knuckles **273***a* and **273***b* be the same as each other. Likewise second perimeter section **274** has a first series of hinge knuckles **279***a* in proximity to the third junction of flange surface **277** and web surface **278**, and a second series of hinge knuckles **279***b* in proximity to the fourth junction of flange surface **277** and web surface **278**. It is preferred that the geometry of hinge knuckles **279***a* and **279***b* be the same as each other, and also the same as hinge knuckles **273***a* and **273***b*. It is specifically preferred that the hinge knuckles **273***a* and **273***b* of first perimeter section **269** each be of length D and be spaced-apart the same distance D, and it is specifically preferred that the hinge knuckles **279***a* and **279***b* of second perimeter section **274** also be of length D and be spaced-apart the same distance D, as shown in FIG. **14**F.

As shown in FIGS. **14**E and **14**F, the series of hinge knuckles **273***a* and **279***a* are not intermeshed, but rather are paired in an abutting relationship. There is provided a spacer link **280**, having a length of less than or approximately equal to distance D, which is positioned between each abutting hinge knuckle pair of hinge knuckles **273***a* and **279***a*. Spacer link **280** has two spaced-apart bores **281**, shown in FIG. **14**A, of approximately the same diameter as the hinge knuckles **273***a* and **279***a*. A first series of linearly arranged cylindrical steel rods **233** of aggregate length L are passed through hinge knuckles **273***a* and one of the bores **281** in each of the spacer links **280** positioned between those hinge knuckles, and a second series of linearly arranged cylindrical steel rods **233** of aggregate length L are passed through hinge knuckles **279***a* and the other of the bores **281** in each of the spacer links **280** positioned between those hinge knuckles. It is preferred that the first series of linearly arranged cylindrical steel rods be joined end-to-end by threaded connections, so that the steel rods **233** act as a single continuous rod that better resists tensile loading. It is also preferred that the second series of linearly arranged cylindrical steel rods **233** be joined in like manner. In one embodiment of second hinged I-beam structure **268**, the first and second series of linearly arranged cylindrical steel rods **233** have a diameter of approximately 0.625 inch (1.5875 cm).

The foregoing knuckle and spacer link arrangement forms an articulated pivotable junction between first perimeter section **269** and second perimeter section **274**, which is able to rotate up to one hundred and eighty degrees (180°) from a fully folded position, as shown in FIG. **14**D (with the exterior faces of web surfaces **272** and **278** forming a flush face), to a fully open (unfolded) position, as shown in FIG. **14**C. The positions of hinge knuckles **273***b* and **279***b* are such that, as shown in FIGS. **14**C and **14**E, hinge knuckles **273***b* intermesh with hinge knuckles **279***b* when second hinged I-beam structure **268** is fully open. When so intermeshed, a third series of linearly arranged cylindrical steel rods **233** of aggregate length L (see FIG. **14**F) can be passed through hinge knuckles **273***a* and **279***a* to lock second hinged I-beam structure **268** in the fully opened position. Like the first and second series of linearly arranged cylindrical steel rods **233**, it is preferred that the third series of linearly arranged cylindrical steel rods **233** be joined end-to-end by threaded connections, so that the steel rods **233** act as a single continuous rod that better resists tensile loading. In one embodiment of second hinged I-beam structure **268**, the third series of linearly arranged cylindrical steel rods **233** has a diameter of approximately 0.625 inch (1.5875 cm).

The design of first and the second perimeter sections **269** and **274** are such that the web surfaces **272** and **278** are in contact when second hinged I-beam structure **268** is fully open, as shown in FIGS. **14**C and **14**E. This contacting relationship assists in weather-sealing the structure. In furtherance of this objective and as shown for example in FIG. **14**A, the exterior face of each of web surfaces **261** and **265** can be provided with plural receiving slots **241**, each for receiving a sealing bead (not shown), in order to form a water-resistant seal between the web surfaces. In an alternative embodiment, the sealing beads can be coextruded at the same time as the perimeter section itself, at locations that approximate the locations of receiving slots **241**. As a general matter, the particular profile of the C-channel of first and second perimeter sections **269** and **274** can vary as desired to include such thickness variations, ridges and/or grooves as are appropriate for the intended application.

First and second perimeter sections **269** and **274** of second folding I-beam structure **268** be fabricated by an extrusion process, such as pultrusion, in which a suitable material (fiberglass reinforced polymer plastic, in the case of pultrusion) is drawn through an appropriately-shaped die to form a work piece generally having the web/flange structure of the perimeter sections. As part of the drawing process, cylindrical conduits can be formed in the work piece proximate the first/third and second/fourth junctions, following which sections of length D can be machined into the conduits at spaced-apart intervals of length D to form a series of hinge knuckles. Alternatively, the work piece can be drawn without such cylindrical conduits, following which tubular sections of length D are secured, for example with adhesive, at spaced-apart intervals of length D to form the series of hinge knuckles. After drawing, the work piece is sectioned into sectioned work pieces of length L to form the desired perimeter sections of second folding I-beam structure **268**. Where first and second perimeter sections **269** and **274** have the same geometry, as is preferred, the sectioned work pieces are interchangeable and can serve as one or the other of first and second perimeter sections **269** and **274**. However, in each case, and referring to first perimeter section **269** in FIG. **14**F for exemplary purposes, hinge knuckles **273***b* (of length D) are not vertically aligned with hinge knuckles **273***a* (of length D), but rather are longitudinally displaced, relative to hinge knuckles **273***a*, an offset distance ϕ of D/2, as shown in FIG. **14**F. Likewise, hinge knuckles **279***b* (of length D) are not located vertically aligned with hinge knuckles **279***a*, but rather are longitudi-

nally displaced, relative to hinge knuckles **279***a* (of length D), the same offset distance ϕ of D/2.

Second folding I-beam structure **268** can be secured to two adjacent enclosure components **155**, or to two adjacent portions of an enclosure component **155**, that are intended to have a folded relationship in shipping module **100**. In FIG. **14**C, two adjacent enclosure components **155** are denominated **155***a* and **155***b*; and as depicted, each enclosure component **155***a*, **155***b* has a first structural layer **210***a*, **210***b* respectively, a foam panel **214***a*, **214***b* respectively, and a second structural layer **215***a*, **215***b* respectively. Second folding I-beam structure **268** has a length "L" (L being approximately equal to the length of the edges in question of the two adjacent enclosure components **155***a* and **155***b*). As seen in FIG. **14**C, first and second perimeter sections **269** and **274** are dimensioned to capture between their respective flange surfaces **271**, **277** the foam panels **214***a*, **214***b* of the respective enclosure components **155***a*, **155***b*, such that web surfaces **272** and **278** abut or are closely proximate to the edges of foam panels **214***a*, **214***b*, respectively. The adjacent first structural layers **210***a* and **210***b* are then respectively positioned to overlap a major portion of the upper flange surfaces **271**, **277**, with locating detents **281**, positioned on those upper flange surfaces as shown in FIG. **14**C, assisting in proper alignment and overlap of first structural layers **210***a*, **210***b*. Likewise, the adjacent second structural layers **215***a* and **215***b* are respectively positioned to overlap a major portion of the lower flange surfaces **271**, **277**, with locating detents **281**, positioned on those lower flange surfaces as shown in FIG. **14**C, assisting in proper alignment and overlap of second structural layers **215***a*, **215***b*.

First and second perimeter sections **269** and **274** can each be secured to the respective enclosure components **155** for example by adhesive applied between the overlapping regions of first and second perimeter sections **269** and **274** and the respective enclosure components **155**, or by fasteners, such as screw or nail fasteners, spaced apart along the length of one or more of flange surfaces **271**, **277** and web surfaces **272** and **278**, and driven therethrough into the respective enclosure component **155**, or by utilizing a combination of adhesive and fasteners in any manner as just described, or otherwise. Once secured to their respective enclosure components **155**, the relevant components can be rotated to a fully folded state to form shipping module **100**, and also rotated to a fully unfolded state upon finishing structure **150** at its intended location.

Tongue-and-Groove Hinged Structure (**242**)

Tongue-and-groove hinged structure **242** is shown edge-on in profile in FIG. **15**. It provides means for pivotally attaching two adjacent enclosure components **155**, or two adjacent portions of an enclosure component **155**, so that one can pivot through at least up to ninety degrees (90°) of arc relative to the other. Tongue-and-groove hinged structure **242** can also provide a sealing function against water ingress into and environmental exposure of the edges of the two adjacent enclosure components **155**, or the two adjacent portions of an enclosure component **155**, to which it is secured, and can provide a sealing function to prevent water ingress across the boundary between those two edges.

Tongue-and-groove hinged structure **242** comprises a first elongate perimeter section **243** of length "L" and a second perimeter elongate section **249** of length "L", where L is the length of each of the edges of two adjacent enclosure components **155** on which first perimeter section **243** and second perimeter section **249** will be respectively positioned in order to pivotally join those sections together.

In particular, referring to FIG. **15**, first perimeter structure **243** (shown edge-on in profile in FIG. **15**) of tongue-and-groove hinged structure **242** is defined by two spaced-apart elongate flange surfaces **244** and an elongate web surface **245**. One of the flange surfaces **244**, flange surface **244***a*, is joined to web surface **245** at a first junction **246**, and the other of the flange surfaces **244**, flange surface **244***b*, is joined to web surface **245** at a second junction **247**. In the case of securing first perimeter section **243** to a planar enclosure component **155** comprising two structural layers separated by foam panels, flange surfaces **244***a*, **244***b* are spaced apart by a distance approximately equal to the thickness of the foam panels of the planar enclosure component **155** over which first perimeter section **243** will be positioned and to which it will be secured, so that first perimeter section **269** thereby forms a C-channel in cross-section.

Comparable to first perimeter section **243**, second perimeter section **249** (shown edge-on in profile in FIG. **15**) of tongue-and-groove hinged structure **242** is defined by two spaced-apart elongate flange surfaces **250** and an elongate web surface **251**. One of the flange surfaces **250**, flange surface **250***a*, is joined to web surface **251** at a third junction **252** and the other of the flange surfaces **250**, flange surface **250***b*, is joined to web surface **251** at a fourth junction **253**. In the case of securing second perimeter section **249** to a planar enclosure component **155** also comprising two structural layers separated by foam panels, flange surfaces **250***a*, **250***b* are spaced apart by a distance approximately equal to the thickness of the foam panels of the planar enclosure component **155** over which second perimeter section **249** will be positioned and to which it will be secured, so that second perimeter section **249** thereby forms a C-channel in cross-section.

Referring to FIG. **15**, first perimeter section **243** has a first series of hinge knuckles formed along first junction **246**, and second perimeter section **249** has a second series of hinge knuckles formed along third junction **252**. The two series of hinge knuckles are intermeshed and joined by a series of linearly arranged cylindrical steel rods **233** of aggregate length L to form a pivotable junction between first perimeter section **243** and second perimeter section **249**, which is able to rotate up through at least ninety degrees (90°) of arc. It is preferred that the series of linearly arranged cylindrical steel rods **233** be joined end-to-end by threaded connections, so that the steel rods **233** act as a single continuous rod that better resists tensile loading. In one embodiment of tongue-and-groove hinged structure **242**, the series of linearly arranged cylindrical steel rods **233** have a diameter of approximately 0.625 inch (1.5875 cm).

Referring again to FIG. **15**, there is provided an elongate tongue-and-groove seal portion **254** (shown edge-on in profile in FIG. **15**) proximate the second junction **247** of first perimeter section **243**, and there is provided an elongate tongue-and-groove seal portion **255** (shown edge-on in profile in FIG. **15**) proximate the fourth junction **253** of second perimeter section **249**. Tongue-and-groove seal portions **254** and **255** are each aligned approximately tangent to a radius centered at first junction **246**, such that they engage in a mating relationship when first and second perimeter sections **243** and **249** are rotated relative to each other such that second junction **247** and fourth junction **253** are proximate.

The particular profile of the C-channels of first and second perimeter sections **243** and **249** of tongue-and-groove hinged structure **242** can vary as desired to include such thickness variations, ridges and/or grooves as are appropri-

ate for the intended application. Thus in FIG. **15**, the exterior face of web surface **245** (i.e., the face away from the edge of the enclosure component **155** to which first perimeter section **243** is to be secured) is provided with plural receiving slots **248** for receiving one or more sealing beads **234**, in order to form a water-resistant seal, with the sealing beads **234** pressing against web surface **251** when first and second perimeter sections **243** and **249** are rotated relative to each other such that elongate tongue-and-groove seal portions **254** and **255** are in a mating relationship. In an alternative embodiment, the sealing beads are coextruded with first perimeter section **243** at locations that approximate the locations of receiving slots **248**. In yet another embodiment, one or more sealing beads can be provided proximate one or more of elongate tongue-and-groove seal portion **254** and elongate tongue-and-groove seal portion **255** to form a water-resistant seal when first and second perimeter sections **243** and **249** are rotated relative to each other such that elongate tongue-and-groove seal portions **254** and **255** are in a mating relationship.

First and second perimeter sections **243** and **249** of tongue-and-groove hinged structure **242** can be fabricated by an extrusion process, such as pultrusion, in which a suitable material (fiberglass reinforced polymer plastic, in the case of pultrusion) is drawn through appropriately-shaped die(s) to form the work pieces generally having the web/flange structure of the perimeter sections. The drawing process can include forming cylindrical conduits that will be the hinge knuckles, or they can be added following the drawing process in accordance with preference, as described above. Similarly, elongate tongue-and-groove seal portions **254** and **255** can be similarly fabricated, subject to the specific seal design and otherwise in accordance with preference.

Tongue-and-groove hinged structure **242** can be secured to two adjacent enclosure components **155**, or to two adjacent portions of an enclosure component **155**, which are intended to have a folded relationship in shipping module **100**. For example, where first perimeter section **243** is to be secured to a planar enclosure component **155** comprising two structural layers separated by foam panels, a first perimeter section **243** having a length L approximately equal to the length of the edge in question of the enclosure component **155** is positioned over the edge of the foam panels, such that web surface **245** abuts or is closely proximate to the edge of the foam. The two structural layers are then positioned over the foam and to overlap a major portion of the flange surfaces **244**, with locating ridge **229** positioned on the exterior of the flange surface **244** proximate first junction **246**, and locating ridge **229** positioned proximate tongue-and-groove arrangement **254**, assisting in proper overlap and alignment of the structural layers.

Likewise, where the associated second perimeter section **249** is to be secured to a planar enclosure component **155** comprising two structural layers separated by foam panels, a second perimeter section **249** having a length L approximately equal to the length of the edge in question of enclosure component **155** is positioned over the edge of the foam panel, such that web surface **251** abuts or is closely proximate to the edge of the foam. The two structural layers are then positioned over the foam and to overlap a major portion of the flange surfaces **250**, with locating ridge **229** positioned on the exterior of the flange surface **250** proximate third junction **252**, and locating ridge **229** positioned proximate tongue-and-groove arrangement **255**, assisting in proper overlap and alignment of the structural layers.

First and second perimeter sections **243** and **249** can each be secured to the respective enclosure components **155** for example by adhesive applied between the overlapping regions of first and second perimeter sections **243** and **249** and the respective enclosure component **155**, or by fasteners, such as screw or nail fasteners, spaced apart along the length of one or more of flange surfaces **244**, **250** and web surfaces **245** and **251**, and driven therethrough into the respective enclosure component **155**, or by utilizing a combination of adhesive and fasteners in any manner as just described, or otherwise. Once secured to their respective enclosure components **155**, the components can be rotated to a fully folded state to form shipping module **100**, and also rotated to a fully unfolded state upon finishing structure **150** at its intended location.

Enclosure Component Perimeter Structure Exemplary Placements

The exploded view in FIG. **16** of the type 2 structure **152** depicted in FIG. **1**B provides exemplary placements of the enclosure component perimeter structures described herein. In particular, tongue-and-groove structures **242** can be utilized to pivotally join wall portion **200***s*-**1** to wall portion **200***s*-**2**, to pivotally join wall portion **200***s*-**2** to wall portion **200***s*-**3** and to pivotally wall portion **200***s*-**4** to wall portion **200***s*-**5**. Also as shown in FIG. **16**, first hinged I-beam structure **258** can be utilized to pivotally join floor portion **300***a* to floor portion **300***b*, and second hinged I-beam structure **268** can be utilized to pivotally join ceiling portion **400***a* to ceiling portion **400***b*, and to pivotally join ceiling portion **400***b* to ceiling portion **400***c*.

As shown further in FIG. **16**, abutting end cap **235** in turn can be utilized to close the top and bottom horizontal edges of wall component **200***s*-R, the top and bottom horizontal edges of wall portions **200***s*-**1** through **200***s*-**5**, the top edge of wall component **200***s*-P, the vertical edges of wall portions **200***s*-**1** and **200***s*-**4** which abut the wall component **200***s*-R, and the two vertical edges of wall portions **200***s*-**3** and **200***s*-**5** which abut the wall component **200***s*-P. Still further, free standing end cap **221** (or reinforced end cap **224**) can be utilized to close the otherwise-exposed horizontal exterior edges of ceiling portions **400***a*, **400***b* and **400***c* generally coinciding with first longitudinal edge **406**, first transverse edge **408**, and second transverse edge **410** of ceiling component **400**, and the two otherwise-exposed vertical edges of wall component **200***s*-P, as shown in FIG. **16**.

Enclosure Component Relationships and Assembly for Transport

For ease of transport and maximum design flexibility, it is preferred that there be a specific dimensional relationship among enclosure components **155**.

FIG. **2**A shows a top schematic view of the type 1 structure **151** shown in FIG. **1**A, and includes a geometrical orthogonal grid for clarity of explaining the preferred dimensional relationships among enclosure components **155**. The basic length used for dimensioning is indicated as "E" in FIG. **2**A; the orthogonal grid overlaid in FIG. **2**A is 24E long and 12 E wide, and illustrates the relative dimensions of the components.

More particularly, in FIG. **2**A the two long wall components **200***a* are approximately 24E long, and the two short wall components **200***b* are approximately 12E long. Each of ceiling portions **400***a*, **400***h* and **400***c* is 24E long and 4E wide. The two floor portions **300***a* and **300***b* of type 1 structure **151** are shown in FIGS. **2**A and **3**A. Each of floor components **300***a* and **300***b* is 24E long; whereas floor

component **300***a* is approximately 4E wide and floor component **300***b* is approximately 8E wide.

The shipping module **100** for type 1 structure **151**, shown edge-on in FIG. **3**A, generally includes a fixed space portion **102** defined by ceiling component **400***a*, floor component **300***a*, long wall component **200***a*-R and two first wall portions **200***h*-**1** of short wall components **200***b*. As shown in FIG. **2**A, the remaining two portions of short wall components **200***b*, second wall portions **200***b*-**2**, are folded inward and positioned against fixed space portion **102** (identified in FIG. **2**A as wall portion **200***b*-**2***f* when so folded and positioned). The three ceiling portions **400***a*, **400***b* and **400***c* of type 1 structure **151** are shown deployed in FIG. **1**A. FIG. **3**A, the shipping module **100** for type 1 structure **151**, depicts ceiling components **400***h* and **400***c* stacked on top of the ceiling component **400***a* that in part defines fixed space portion **102**. Long wall component **200***a*-P, shown in FIGS. **2**A and **3**A, is pivotally secured to floor portion **300***b* at the location of horizontal axis **105**, and is vertically positioned against the outside of second wall portions **200***b*-**2**. In turn, floor portion **300***b* is vertically positioned proximate to fixed space portion **102**, with long wall component **200***a*-P pending (i.e., hanging) from floor portion **300***b* between floor portion **300***b* and second wall portions **200***b*-**2**.

Sizing the enclosure components **155** of type 1 structure **151** according to the dimensional relationships disclosed above yields a compact shipping module **100**, as can be seen from the figures. Thus shipping module **100**, when dimensioned according to the relationships disclosed herein using an "E" dimension (see FIG. **2**A) of approximately 19.5 inches (49.5 cm), and when its components are stacked and positioned as shown in FIG. **3**A, has an overall length of approximately 39 feet (11.89 meters), an overall width of approximately 8.5 feet (2.59 meters) and an overall height of approximately 12.7 feet (3.87 meters). These overall dimensions are approximately the same or less than a typical shipping container.

Similarly, FIG. **2**B shows a top schematic view of the type 2 finished structure **152** shown in FIG. **1**B, and includes a geometrical orthogonal grid for clarity of explaining the preferred dimensional relationships among its enclosure components **155**. The basic length used for dimensioning is indicated as "E" in FIG. **2**B; the orthogonal grid overlaid in FIG. **2**B is approximately 8E long and 8E.

More particularly, in FIG. **2**B the four wall components **200***s* are approximately 8E long, and each of ceiling portions **400***a*, **400***b* and **400***c* is approximately 8E long and 2.67E wide. The two floor portions **300***a* and **300***b* of finished structure **152** are shown in FIGS. **2**B and **3**B. Each of floor components **300***a* and **300***b* is 8H long; whereas floor component **300***a* is approximately 3E wide and floor component **300***b* is approximately 5E wide.

The shipping module **100** for type 2 structure **152**, shown edge-on in FIG. **3**B, also generally includes a fixed space portion **102** defined by ceiling component **400***a*, floor component **300***a*, wall component **200***s*-R, wall portion **200***s*-**1** and wall portion **200***s*-**4**. As show in FIG. **2**B, second wall portion **200***s*-**2** is folded inward and positioned generally against fixed space portion **102**, whereas third wall portion **200***s*-**3** is folded outward and positioned generally against second wall portions **200***s*-**2** (wall portions **200***s*-**2** and **200***s*-**3** are respectively identified in FIG. **2**B as portions **200***s*-**2***f* and **200***s*-**3***f* when so folded and positioned); so as to form an accordion fold having as its elements fixed space portion **102**, second wall portion **200***s*-**2** and third wall portion **200***s*-**3**. Fifth wall portion **200***s*-**5** is folded inward and positioned generally against fixed space portion **102** (identified in FIG. **2**B as wall portion **200***s*-**5***f* when so folded and positioned). The three ceiling components **400***a*, **400***b* and **400***c* are shown deployed in FIG. **1**B. FIG. **3**B, the shipping module **100** for type 2 structure **152**, depicts ceiling components **400***b* and **400***c* stacked on top of the ceiling component **400***a* that in part defines fixed space portion **102**. Wall component **200***s*-P, shown in FIGS. **2**B and **3**B, is pivotally secured to floor portion **300***b* at the location of axis **105**, and is vertically positioned against the outside of wall portions **200***s*-**3** and **200***s*-**5**. In turn, floor portion **300***b* is vertically positioned proximate fixed space portion **102**, with long wall component **200***s*-P pending from floor portion **300***b* between floor portion **300***b* and wall portions **200***s*-**3** and **200***s*-**5**.

Sizing the enclosure components **155** of type 2 structure **152** according to the dimensional relationships disclosed above yields a compact shipping module **100**, as can be seen from the figures. Thus shipping module **100** depicted in FIG. **3**B, when dimensioned according to the relationships disclosed herein using an "E" dimension (see FIG. **2**B) of approximately 29 inches (73.7 cm), and when its components are stacked and positioned as shown in FIG. **3**B, has an overall length of approximately 19 feet (5.79 m), an overall width of approximately 8.5 feet (2.59 meters) and an overall height of approximately 12.7 feet (3.87 meters). These overall dimensions are less than a typical shipping container.

The geometrical orthogonal grid referred also provides beneficial reference points for placement of floor chases **319**, wall chases **219** and ceiling chases **440**. When such chases are placed for example at specific "E" intervals that coincide with the grid spacing being used, they are easily located during structure finishing.

It is preferred that the fixed space portion **102** be in a relatively finished state prior to positioning (folding) together all other of the wall, ceiling and floor portions as described above. That is, the fixed space portion **102** is preferably fitted during manufacture with all mechanical and other functionality that the structure **150** will require, such as kitchens, bathrooms, laundry rooms, HVAC closets, fireplaces, clothing closets, storage areas, corridors, etc. A temporary member **103** (shown in FIG. **3**A) provides support during shipping of type 1 structure **151** and is removed after delivery (there is no comparable temporary member utilized for shipping type 2 structure **152**). Preferably after fixed space portion **102** is finished to the desired state, the remaining components are folded and positioned against fixed space portion **102** as described above. The components, so folded and positioned, permit the builder, in effect, to erect finished structure **150** simply by "unfolding" (deploying) the positioned components of shipping module **100**.

As exemplified by long wall component **200***a* in FIG. **5**A, each of the wall, floor and ceiling components **200**, **300** and **400**, and/or the portions thereof, can be sheathed in protective film **177** during fabrication and prior to forming the shipping module **100**. Alternatively or in addition, the entire shipping module **100** can be sheathed in a protective film. These protective films accordingly constitute a means for protecting the shipping module **100** and components **200**, **300** and **400** during shipping. In addition to the protection they give to the module and its components, such protective films have the added benefit of increasing the resistance of the components to such flexural and torsional stresses as may occur during transport of the components. These protective films constitute further means for rigidifying wall

component **200** to improve its robustness during transport and erection of the structure at the construction site. It is preferred that such protective films remain in place until after the shipping module **100** is at the construction site, and then removed as required to facilitate enclosure component deployment and finishing.

Shipping Module Transport

The shipping module is shipped to the building site by appropriate transport means. One such transport means is disclosed in U.S. Patent Application Publication No. US 2019/0100127 A1, filed Sep. 27, 2018, and in International Publication No. WO 2019/070485 A1; the contents of which are incorporated by reference as if fully set forth herein, particularly as found at paragraphs 0020-0035 and in FIGS. 1A-2D thereof. As an alternative transport means, shipping module **100** can be shipped to the building site by means of a conventional truck trailer or a low bed trailer (also referred to as a lowboy trailer).

Structure Deployment and Finishing

At the building site, shipping module **100** is positioned over its desired location, such as over a prepared foundation; for example, a poured concrete slab, a poured concrete or cinder block foundation, sleeper beams or concrete posts or columns. This can be accomplished by using a crane, either to lift shipping module **100** from its transport and move it to the desired location, or by positioning the transport means over the desired location, lifting shipping module **100**, then moving the transport means from the desired location, and then lowering shipping module **100** to a rest state at the desired location. Particularly suitable equipment and techniques for facilitating the positioning of a shipping module **100** at the desired location are disclosed in U.S. Nonprovisional patent application Ser. No. 16/786,315 (now U.S. Pat. No. 11,220,816) entitled "Equipment and Methods for Erecting a Transportable Foldable Building Structure," having the same inventors and filed on the same date as the subject application. The contents of that U.S. Nonprovisional patent application Ser. No. 16/786,315 (now U.S. Pat. No. 11,220,816) entitled "Equipment and Methods for Erecting a Transportable Foldable Building Structure," having the same inventors and filed on the same date as the subject application, are incorporated by reference as if fully set forth herein, particularly including the equipment and techniques described for example at paragraphs 126-128 and in connection with FIGS. 11A and 11B thereof.

Following positioning of shipping module **100** at the building site, the appropriate portions of wall, floor and ceiling components **200**, **300** and **400** are "unfolded" (i.e., deployed) according to the sequences described above to yield finished structure **150**.

For type 1 structure **151**, unfolding (enclosure component and component portion deployment) occurs in the following sequence: (1) floor portion **300***b* is pivotally rotated about horizontal axis **305** shown in FIG. **3**A to an unfolded position, (2) wall component **200***a*-P is pivotally rotated about horizontal axis **105** shown in FIG. **3**A to an unfolded position, (3) wall portions **200***b*-**2** of short wall components **200***b* are pivotally rotated about vertical axes **191** shown in FIG. **2**A to unfolded positions, and (4) ceiling portions **400***b* and **400***c* are pivotally rotated about horizontal axes **405***a* and **405***b* respectively to their unfolded positions.

For type 2 structure **152**, unfolding occurs in the following sequence: (1) floor portion **300***b* is pivotally rotated about horizontal axis **305** shown in FIG. **3**B to an unfolded position, (2) wall component **200***s*-P is pivotally rotated about horizontal axis **105** shown in FIG. **3**B (behind perimeter board **312**) to an unfolded position, (3) wall portions **200***s*-**2**, **200***s*-**3** and **200***s*-**5** are pivotally rotated about vertical axes **192**, **193** and **194** respectively to unfolded positions, and (4) ceiling portions **400***b* and **400***c* are pivotally rotated about horizontal axes **405***a* and **405***b* respectively to unfolded positions. A mobile crane can be used to assist in the deployment of certain of the enclosure components **155**, specifically ceiling portions **400***b* and **400***c*, floor portion **300***b*, as well as the wall component **200** (**200***a*-P for type 1 structure **151**, **200***s*-P for type 2 structure **152**) pivotally secured to floor portion **300***b*. Alternatively, particularly suitable equipment and techniques for facilitating the deployment of enclosure components **155** are disclosed in U.S. Nonprovisional patent application Ser. No. 16/786,315 (now U.S. Pat. No. 11,220,816) entitled "Equipment and Methods for Erecting a Transportable Foldable Building Structure," having the same inventors and filed on the same date as the subject application. The contents of that U.S. Nonprovisional patent application Ser. No. 16/786,315 (now U.S. Pat. No. 11,220,816) entitled "Equipment and Methods for Erecting a Transportable Foldable Building Structure," having the same inventors and filed on the same date as the subject application, are incorporated by reference as if fully set forth herein, particularly including the equipment and techniques described for example at paragraphs 132-145 and depicted in FIGS. 12A-14B thereof.

Notably, baseboard **310** in appropriate locations functions as a "stop" to arrest the unfolding of a wall component or a wall portion at its intended deployed position. Thus for example, baseboard **310** in FIG. **3**A, depicting a type 1 structure **151**, arrests the unfolding of the long wall **200***a*-P shown in the figure, when long wall **200***a*-P is fully deployed in its desired vertical position. Likewise, perimeter board **312** in FIG. **3**B, depicting a type 2 structure **152**, performs a similar function with respect to a wall **200***s*-P, and also with respect to wall portions **200***s*-**2**, **200***s*-**3** and **200***s*-**5**. Further, baseboard **310** provides a structure for securing a deployed wall component in its deployed position; thus for example, baseboard **310** is provided in FIG. **6**A with plural spaced-apart apertures **311** through which fasteners may be inserted to secure long wall **200***a* in place.

After deployment, the enclosure components **155** are secured together to form finished structure **150**, shown in FIGS. **1**A and **1**B. If any temporary hinge mechanisms have been utilized, then these temporary hinge mechanisms can be removed if desired and the enclosure components **155** can be secured together. If any of select enclosure component perimeter structures have been utilized—namely, abutting end cap **235**, first hinged I-beam structure **258**, second hinged I-beam structure **268** and tongue-and-groove hinged structure **242**—then the following finishing operations are preferably performed:

Abutting end cap (**235**). Referring to FIG. **17**, apertures **275** are cut at spaced-apart locations in any structural layer proximate the fastener shelves **239** of each utilized abutting end cap **235**, either during manufacture prior to shipment of shipping module **100**, or following delivery and deployment. Following deployment, fasteners, such as screw or nail fasteners, are driven down through the apertures **275** and the fastener shelves **239** of abutting end cap **235** and into the underlying enclosure component **155**, as indicated in FIG. **17**, thereby to fasten the enclosure components **155** utilized abutting end caps **235** to the underlying enclosure components **155**. The apertures are then plugged.

First Hinged I-beam structure (**258**). Following unfolding, the hinge knuckles **266***b* and **267***b* are in an interlaced relationship, as shown in FIGS. **13**C and **13**F. Accordingly, the second series of linearly arranged cylindrical steel rods

233 can be threaded together and inserted through hinge knuckles 266*b* and 267*b* of first hinged I-beam structure 258, as shown in FIG. 13F, to lock first I-beam structure 258 in a fully open (unfolded) position. In such a locked structure, the steel rods are believed to serve as tension members (somewhat in the manner of rebar), and first hinged I-beam structure 258 substantially resists bending along its length. When so locked, first hinged I-beam structure 258 has particular utility for supporting finished structure 150 when it is placed on a foundation of multiple concrete posts or columns.

Second Hinged I-beam structure (268). Following unfolding, the hinge knuckles 273*b* and 279*b* are in an interlaced relationship, as shown in FIGS. 14C and 14E. Accordingly, the third series of linearly arranged cylindrical steel rods 233 can be threaded together and inserted through hinge knuckles 273*b* and 279*b* of second hinged I-beam structure 268 and to lock I-beam structure 268. In such a locked structure, the steel rods are believed to serve as tension members (somewhat in the manner of rebar), and second hinged I-beam structure 268 substantially resists bending along its length.

Tongue-and-groove hinged structure (242). Following unfolding, tongue-and-groove arrangements 254 and 255 of all utilized tongue-and-groove structures 242 are engaged in a mating relationship. Thus fasteners, such as screw or nail fasteners, can be driven through for example tongue-and-groove arrangements 254 and 255 to lock together in an unfolded orientation the enclosure components 155 to which tongue-and-groove structure 242 are fastened.

After deployment and securing of the enclosure components 155, one or more pre-selected chases located in wall components 200, in floor component 300 and in ceiling component 400 can be wired and connected. Prior to, during or following deployment and securing of the enclosure components 155, as desired, apertures 202, 204 for one or more doors and windows are cut at desired locations in the wall components 200, and appropriate door and window assemblies are positioned and fastened in the apertures 202, 204. Additional municipal hook-ups are made to water and sewer lines to complete structure 150, as relevant here.

The foregoing detailed description is for illustration only and is not to be deemed as limiting the invention, which is defined in the appended claims.

What is claimed is:

1. An enclosure member for a building structure, comprising:

a planar laminate having a generally linear edge comprising a first facing layer; a layer of foam having a first face and a second opposing face; and a second facing layer; the first facing layer fastened to the first face of the layer of foam, and the second facing layer fastened to the second opposing face of the layer of foam;

an abutting end cap comprising:

a first elongate flange surface, an elongate web surface and a second elongate flange surface, the first elongate flange surface and the second elongate flange surface being spaced-apart by a distance; the web surface, the first elongate flange surface and the second elongate flange surface generally forming a C-channel shape;

a first inclined fastener shelf joined at a first point to the first elongate flange surface and to a first edge of the elongate web surface, an inclined surface of the first inclined fastener shelf joins, at the first point, a portion of the first elongate flange surface that is canted inwardly to form a V-shaped recess, and a second inclined fastener shelf joined at a second point to the second elongate flange surface and to a second edge of the elongate web surface, each of the first and second inclined fasteners shelves oriented to direct a leading portion of a screw or nail fastener through the web surface and away from the planar laminate into an abutting planar enclosure component;

the abutting end cap secured to the generally linear edge of the planar laminate, with the distance spacing apart the first and second elongate flange surfaces adapted to receive between them at least the generally linear edge of the layer of foam.

2. The enclosure member as in claim 1, wherein the first elongate flange surface is canted inwardly proximate to the first point, and the second elongate flange surface is canted inwardly proximate the second point.

3. The enclosure member of claim 2, wherein the first and second elongate flanges are canted inward at an angle of approximately thirty degrees proximate to the first point.

4. The enclosure member of claim 2, wherein the first inclined fastener shelf has an incline of approximately sixty degrees relative to a portion of the first elongate flange surface that is perpendicular to the elongate web surface.

5. The enclosure member as in claim 1, further comprising an elongate cavity wall joined to each of the first and second elongate flange surfaces, the elongate cavity wall being spaced from and generally parallel to the elongate web surface, and spanning the distance spacing apart the first and second elongate flange surfaces, to define a reinforcement channel.

6. The enclosure member as in claim 1, wherein the first facing layer and the second facing layer are each selected from the group consisting of (a) a structural layer comprising a plurality of structural panels of inorganic oxide, (b) a layer of metallic sheet, and (c) a combination of a protective layer comprising a plurality of structural panels of inorganic oxide and a layer of metallic sheet.

7. The enclosure member of claim 1, wherein the abutting end cap further comprises:

a receiving slot formed in and opening outwardly from an exterior surface of the elongate web surface away from the C-channel shape, the receiving slot adapted to receive sealing heads.

8. The enclosure member of claim 1, wherein the first inclined fastener shelf is accessible from a side of the C-channel shape formed by the first elongate flange surface.

9. The enclosure member of claim 1, wherein the first inclined fastener shelf is adapted to receive fasteners at a non-zero angle relative to the elongate web surface.

10. The enclosure member of claim 1, wherein a face of the first inclined fastener shelf is oriented outwardly from a first side of the C-channel shape that includes the first elongate flange surface.

* * * * *