United States Patent [19]

Murphy

[11] **3,867,802**

[45] **Feb. 25, 1975**

[54] **FLOOR SUPPORT ASSEMBLY FOR BUILDING STRUCTURES**

[75] Inventor: **Wesley T. Murphy,** Auburn, N.Y.

[73] Assignee: **Vercon Products, Inc.,** Charlotte, N.C.

[22] Filed: **Mar. 9, 1973**

[21] Appl. No.: **339,796**

Related U.S. Application Data

[63] Continuation-in-part of Ser. No. 160,018, July 6, 1971, abandoned, which is a continuation-in-part of Ser. No. 85,533, Oct. 30, 1970, abandoned.

[52] **U.S. Cl.** **52/483,** 52/220, 52/664, 52/712, 52/731, 52/732

[51] **Int. Cl.** **E04b 5/52,** E04c 2/42

[58] **Field of Search** ..... 52/483, 488, 489, 665, 52/664, 614, 629, 758 A, 760

[56] **References Cited**

UNITED STATES PATENTS

1,089,371	3/1914	Baumgartl	52/488 X
2,008,557	7/1935	Lambert	52/483
2,220,349	11/1940	Plumb	52/483 X
2,706,314	4/1955	Siering	52/489 X
2,840,200	6/1958	Wong	52/758 A X
2,981,383	4/1961	Dunn	52/488 X
2,996,765	8/1961	Nelsson	52/489 X
3,089,569	5/1963	Shultz	52/489
3,170,217	2/1965	Williams	52/488 X
3,286,427	11/1966	Colter	52/758 A x
3,456,971	7/1969	Sutter	52/760
3,471,981	10/1969	Segit et al.	52/664 X
3,627,364	12/1971	Van Riet	52/665 X
3,693,303	9/1972	Downing et al.	52/665 X

Primary Examiner—Frank L. Abbott
Assistant Examiner—Leslie A. Braun
Attorney, Agent, or Firm—Caesar, Rivise, Bernstein & Cohen

[57] **ABSTRACT**

A floor support assembly comprising a beam having a ledge, a floor joist and a locking clip for connecting the joist to the beam. The joist includes an elongated bottom wall portion terminating at an end and a pair of said walls projecting along the length of the bottom wall and at an angle thereto so as to form a member having a generally V-shaped cross section. Each side wall includes a ledge extending therealong. The ledges are coplanar and are adapted to be received within respective grooves in a floor panel to support the panel thereon. The joist is supported at its end by the ledge of the beam and is connected to the beam by the clip. The clip includes an elongated body portion and a short leg and a long leg projecting laterally from opposed ends of the body portion and in opposite directions. The long leg terminates in a projecting ear. The short leg of the clip extends through an opening in the bottom wall of the joist adjacent the end and an aligned opening in the ledge disposed thereunder. The long leg of the clip extends through an opening in the side wall of the flange with the projecting ear thereon extending into an opening in the beam. The beam includes a flange portion for connection to a similar beam to form a hollow beam section which not only serves as a support or associated floor joists, but also serves as a heating and/or cooling duct.

10 Claims, 7 Drawing Figures

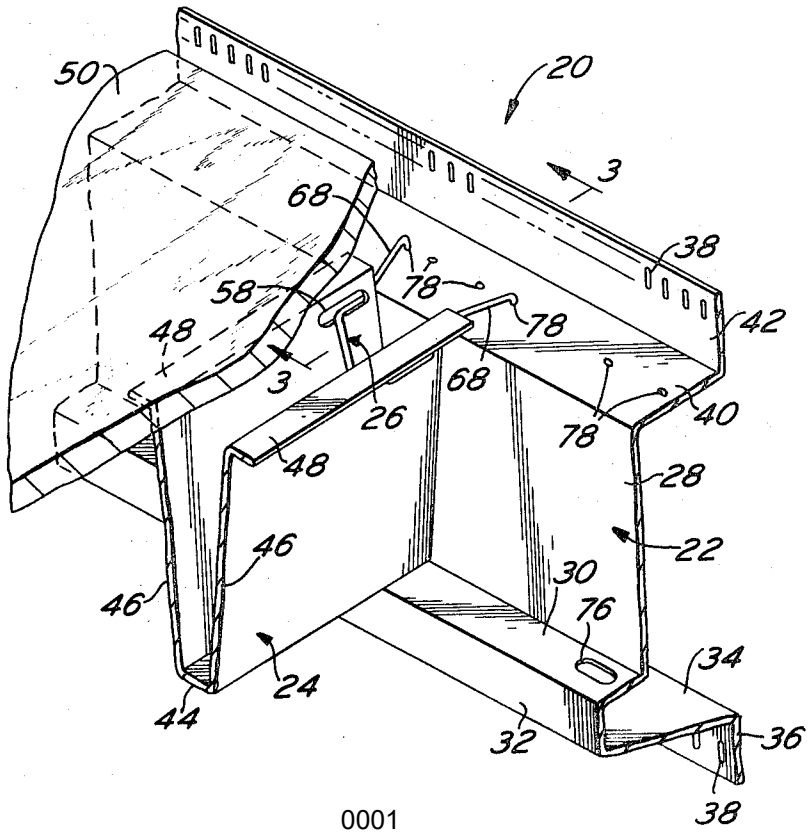

Columbia EX2191
Simpson Strong-Tie Company Inc. v. Columbia Insurance Company
PGR2024-00050

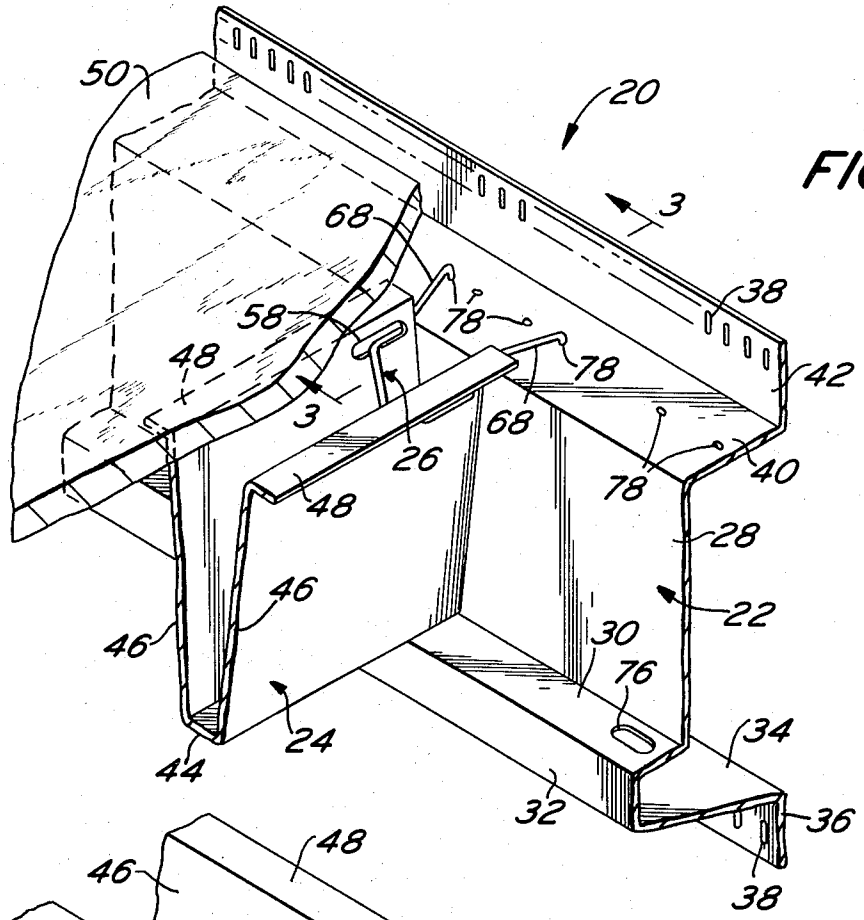
50
20
3
68
38
58
78
48
78
42
3
68
26
78
40
48
28
46
22
46
30
76
24
34
44
32
36
38

FIG. 1

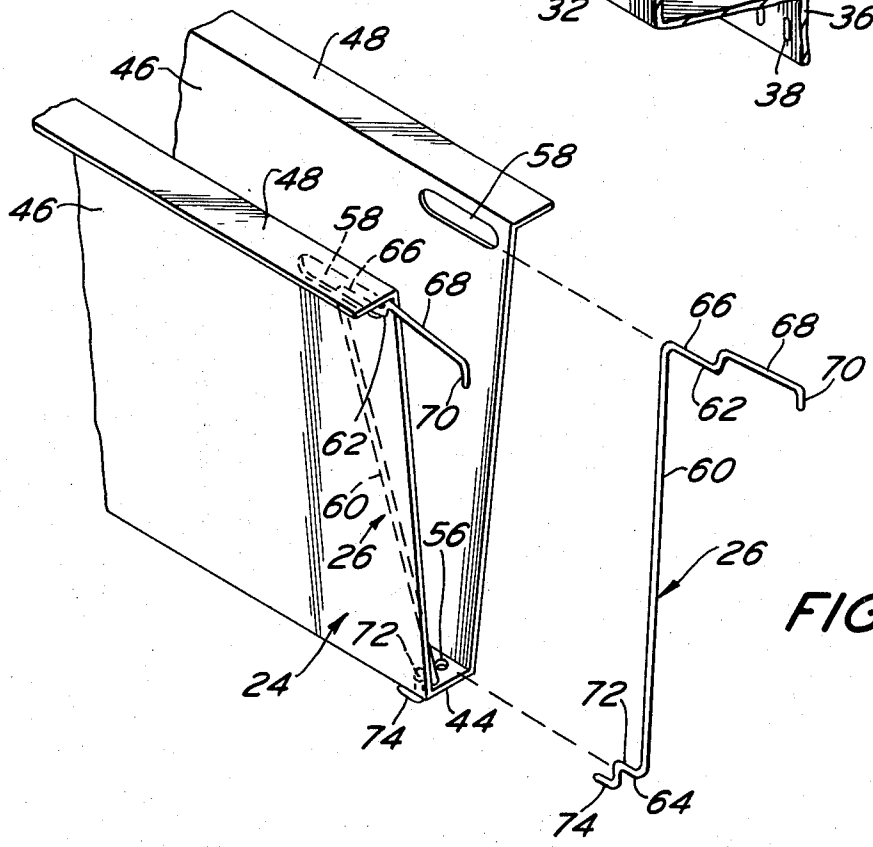
48
46
58
48
46
58
66
68
66
68
70
62
70
62
60
60
26
56
26
72
24
72
74
44
64
74

FIG. 2

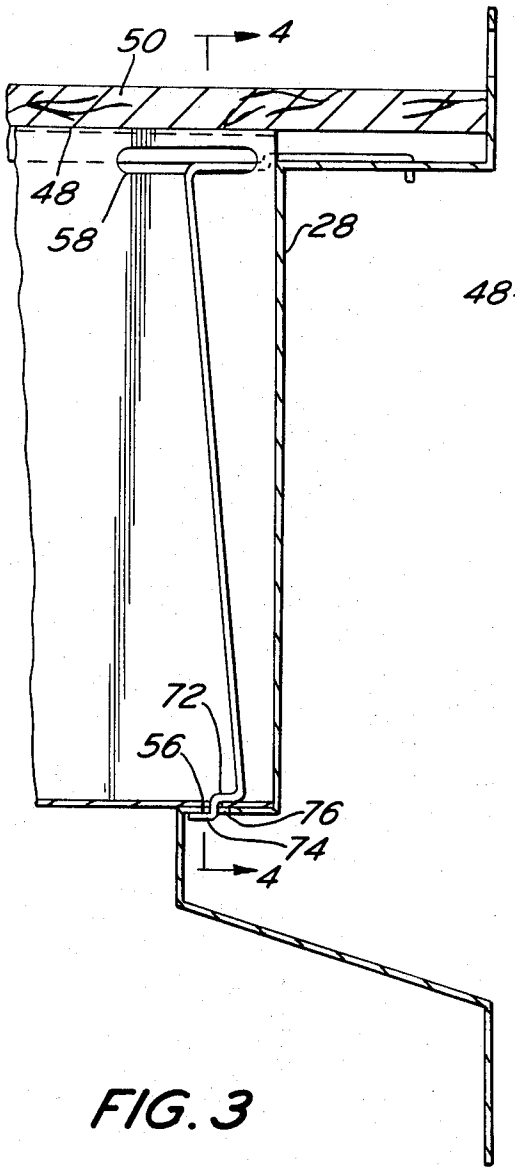
50
4
48
58
28
72
56
76
74
4

FIG. 3

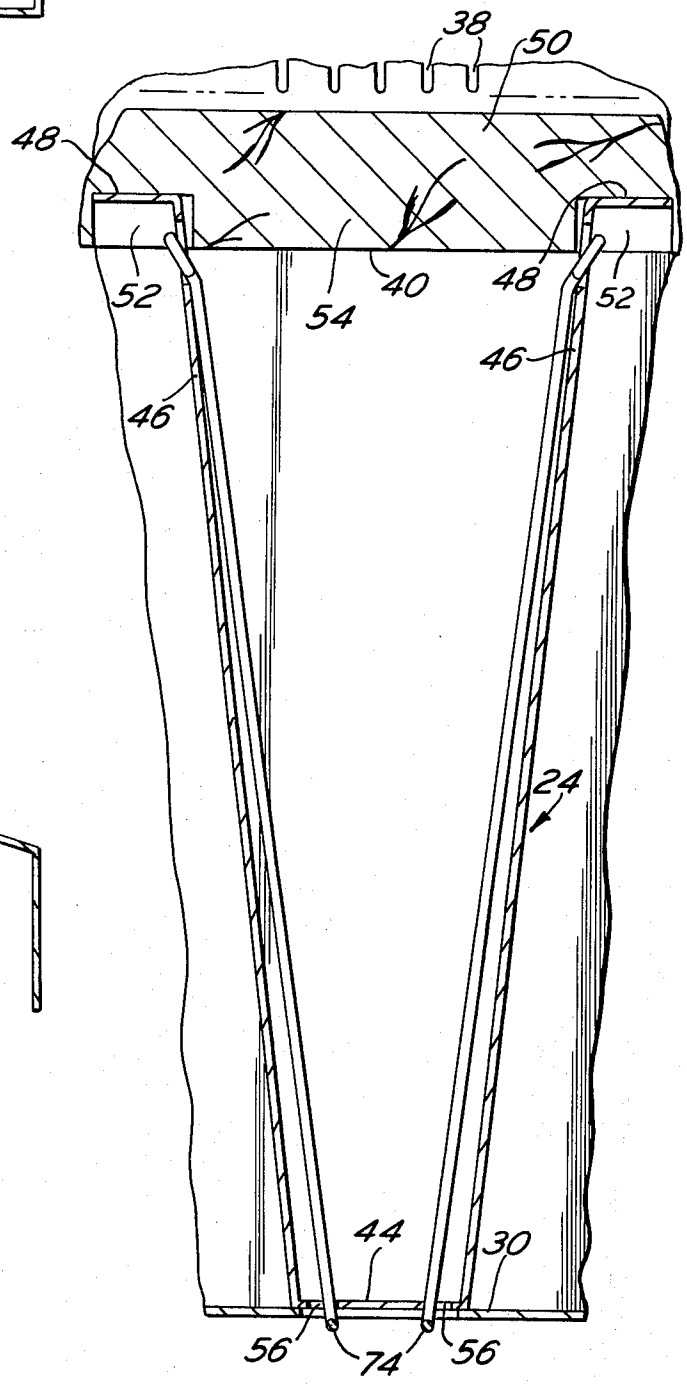
38
50
48
52
54
40
48
52
46
46
24
44
30
56
74
56

FIG. 4

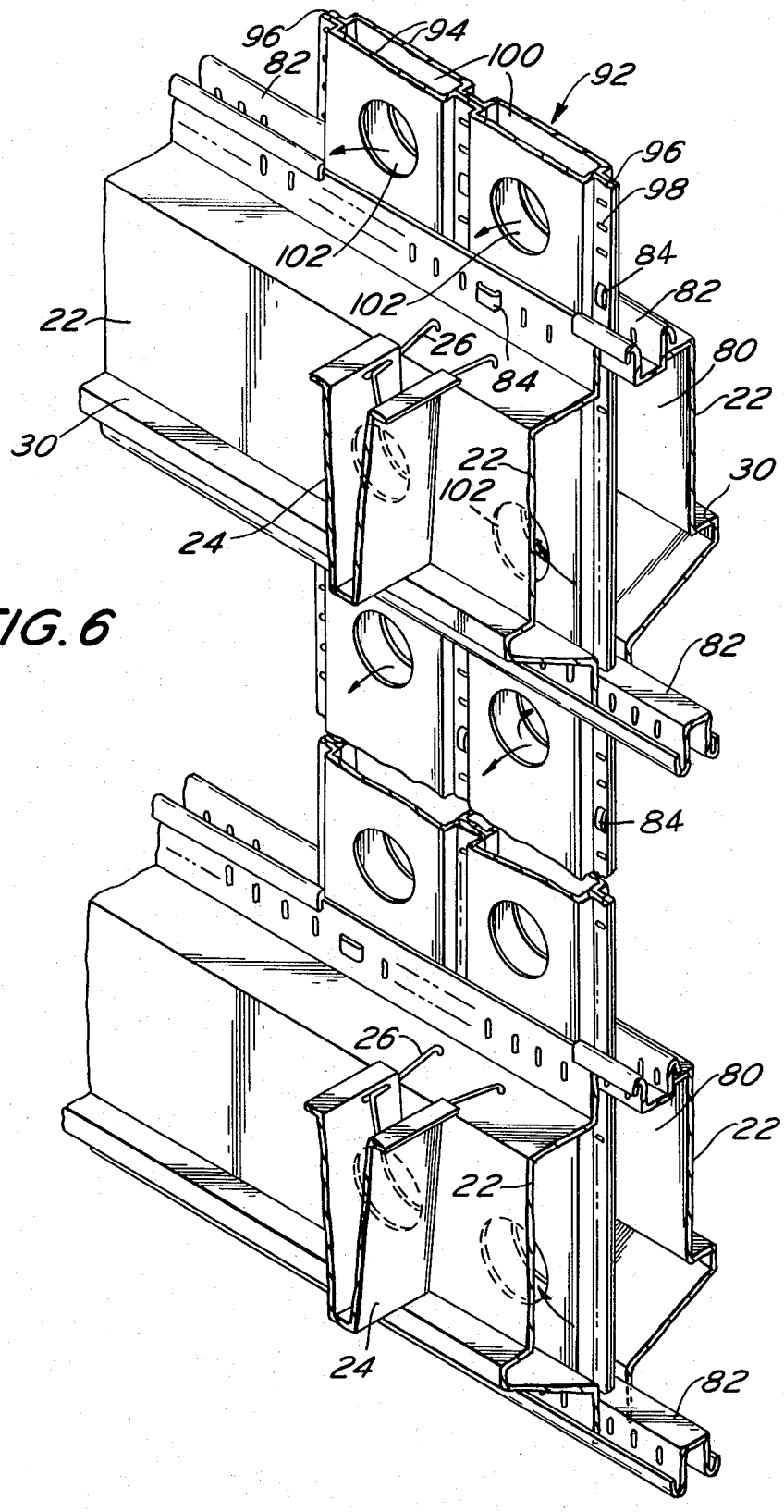
96
94
100
92
82
96
98
102
84
82
102
22
26
84
80
22
30
22
30
102
24
82
84
26
80
22
22
24
82

FIG. 6

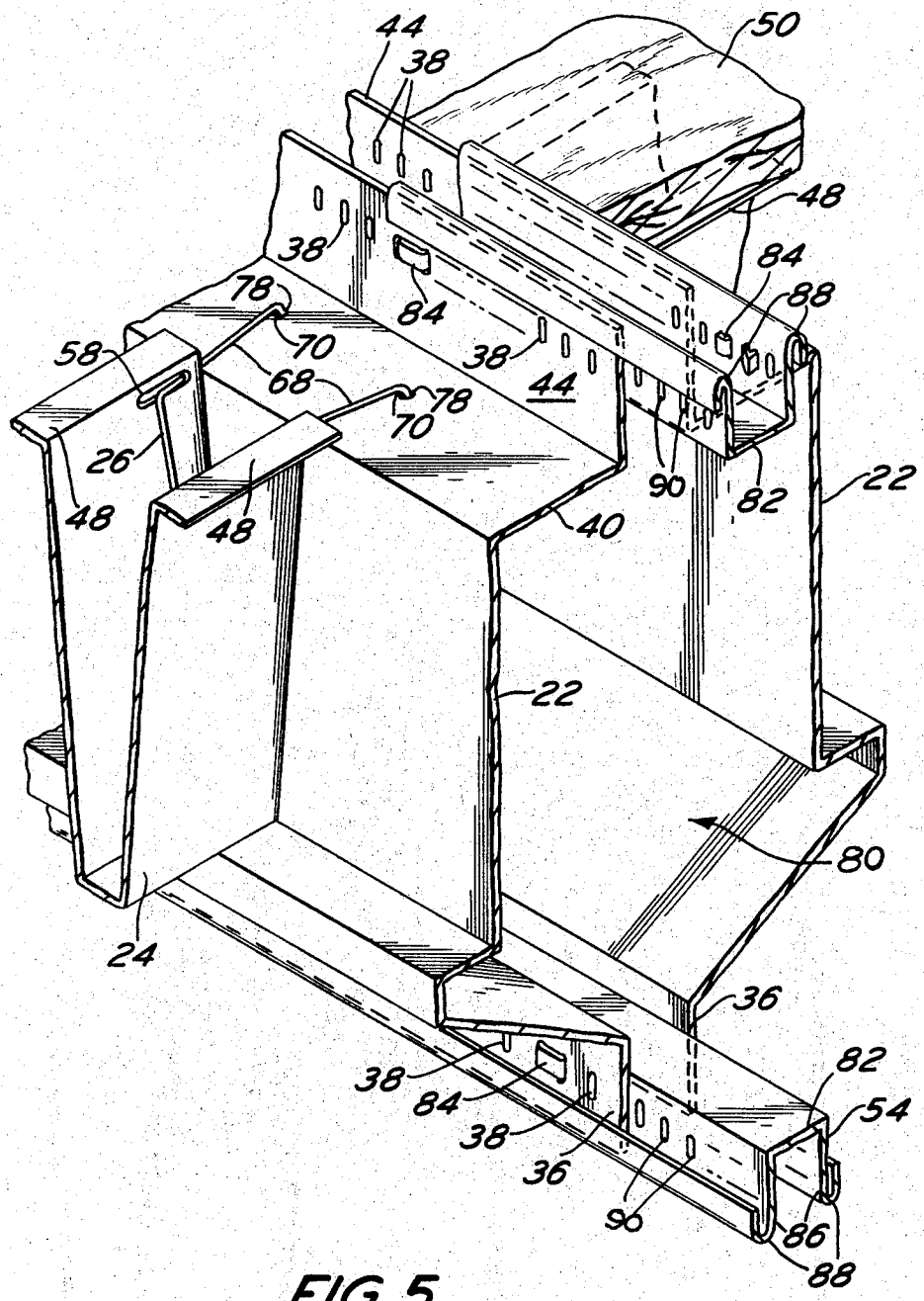
44
38
50
48
38
84
84
88
78
70
58
68
38
44
78
70
26
90
82
22
48
48
40
22
80
24
36
82
38
84
54
38
36
90
86
88

FIG. 5

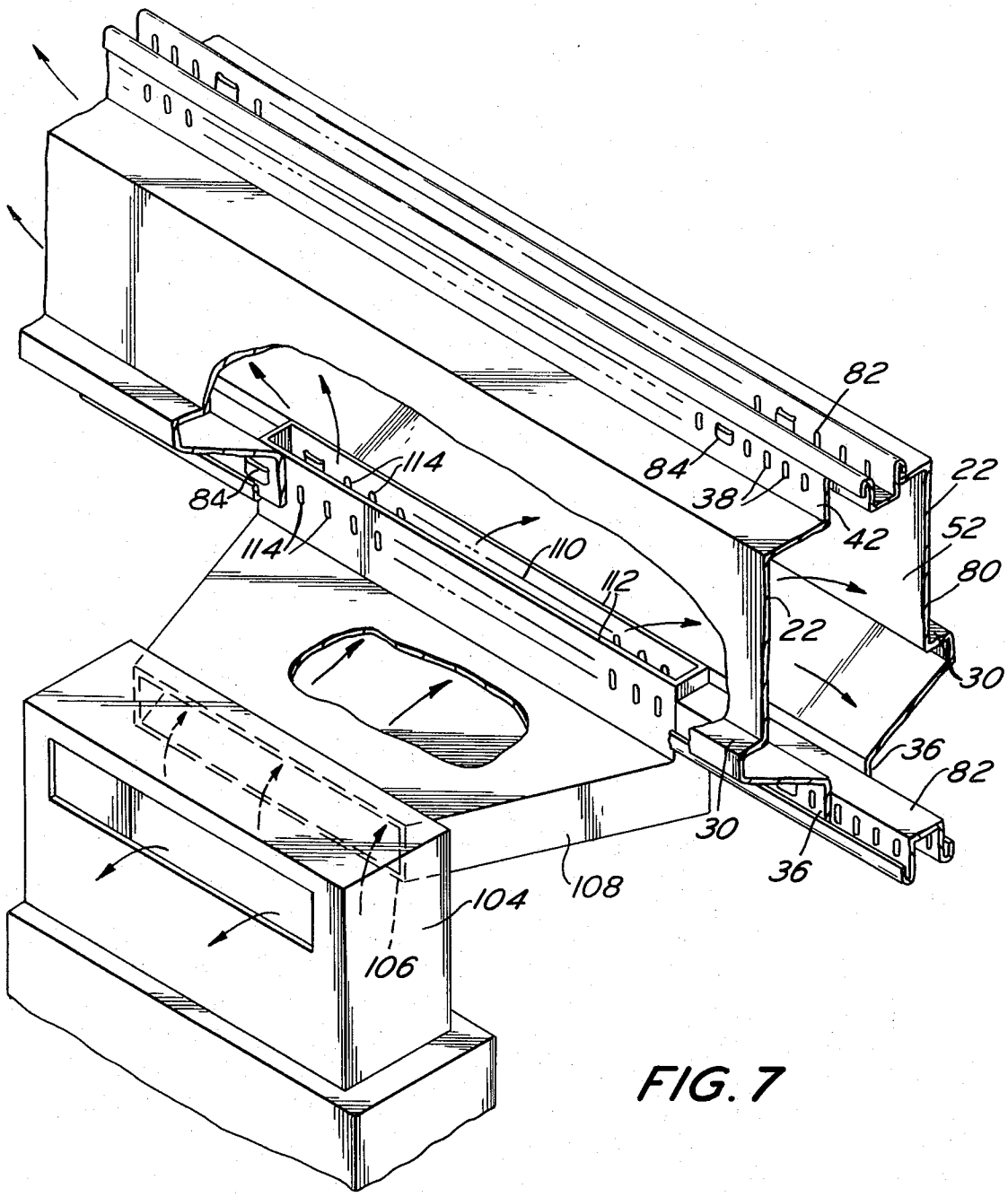

FIG. 7

FLOOR SUPPORT ASSEMBLY FOR BUILDING STRUCTURES

This application is a continuation-in-part of pending application Ser. No. 160,018 filed on July 6, 1971 and entitled "Modular Building" now abandoned, which is in turn a continuation-in-part of application Ser. No. 85,533, filed on Oct. 30, 1970 and entitled "Building Structures" now abandoned.

The present invention relates generally to buildings and more particularly to building systems including the use of standardized floor support assemblies.

A large number of prefabricated and modular housing systems have been formulated over the years, but for various reasons, there has been little acceptance or success with such systems.

The prefabricated systems which have been presented for commercial use are generally comprised of a large number of components that are usually not standardized, and therefore must be constructed by a skilled craftsman with careful attention to plans.

Furthermore, such systems have been generally unattractive in appearance, such that any saving in cost has not been proved to be an incentive to the adoption of such systems, particularly in low and middle cost housing.

As the shortage of housing grows, the need has deepened for an effective modular building that can easily be constructed by unskilled workman at low costs.

In the above mentioned application Ser. No. 160,018, there is disclosed and claimed a novel metal studding which is standardized and can be readily fabricated from roll steel stock when needed, thereby eliminating the need for a large inventory of parts, which heretofore has been required of prior art housing systems. The novel studding is so configured as to enable a large number of parts, such as wall panels, to be readily connected without special tools by relatively unskilled labor and without the use of nails or threaded fastening means. Furthermore, the joints between the panels connected by the novel studding are not exposed and do not require spackling, tape or other retaining means. The studding includes openings to permit the assembly of electrical wiring, piping, heating and ventilating ducts.

The novel studding disclosed in the aforementioned application basically comprises a pair of half stud members held together by rotating clamps. The half stud members are preferably of identical construction, each including a first longer wall and a second shorter wall, the first and second walls running generally parallel to each other and connected by a bridging section, each wall terminating in a free edge tab portion.

The two half stud members are disposed against each other in such a way that the longer first wall of each half stud member is immediately adjacent the other, such that the respective tabs of the first and second parallel walls extend away from each other. A vinyl separator is interposed between the adjacent first parallel walls and possesses an exterior seal at one end and an interior seal at the other end.

The walls are erected by providing an interior panel having longitudinal grooves formed in the interior surface adjacent each vertical edge. A half stud member is attached to the panel at each vertical edge with the tabs of the second parallel walls of the first half stud member being received in the longitudinal grooves of the panel. The exterior panel with its associated half

studs is then so positioned with respect to a previously erected exterior wall panel (which already has a stud associated therewith) that the half studs of the previously erected wall panel and the nearest half stud of the panel about to be erected may be secured together with rotating clamps after a vinyl separator has been interposed between the first parallel walls of the two half stud members.

A novel spring clip is provided to enable the half stud members to be simply and securely fastened to a horizontal wall plate. The clip also has other fastening functions, one of which being to secure the half stud members to a supporting brace.

The clip essentially comprises a body portion from which a tab portion extends at one end thereof, with a spring finger extending from the other end of the body portion. The clip is adapted to snap into a pair of slots that may exist in adjacent walls that are to be secured together. To that end, the tab portion is simply slipped into one of the slot pairs and the spring finger is passed through the other slot pair and allowed to move in a locking position.

Heretofore, various floor support assemblies for modular systems have been proposed, but such assemblies have suffered from various deficiencies such as for example, they require a large inventory of specially fabricated parts, they are complex, they require skilled workman or special tools for assembly and are relatively expensive.

It is a general object of this invention to provide a novel floor support assembly which overcomes the above described disadvantages of prior art floor support assemblies.

It is a further object of this invention to provide a novel floor support assembly formed of standardized parts which can be fabricated when needed, can be put together readily by relatively unskilled workman without special tools.

It is still a further object of this invention to provide in a floor support assembly, a novel floor joist.

It is another object of this invention to provide a novel clip for readily connecting a floor joist in a floor support assembly.

It is still another object of this invention to provide in a floor support assembly, a novel beam which can be fabricated when needed and which is adapted for supporting a floor joist thereon.

It is still another object of this invention to provide in a floor support assembly, a beam, which when connected to a similar beam, forms a hollow beam section which not only serves to support associated floor joists in the assembly but also serves as a heating and/or cooling duct.

The foregoing as well as other objects of the invention are achieved by providing a floor support assembly comprising a beam including a first ledge, an elongated floor joist including a bottom wall and a pair of side walls, a portion of the bottom wall being disposed upon and supported by the first ledge and locking clip means for connecting the floor joist to the beam. The floor joist is a generally V-shaped member including a pair of ledges adapted for supporting a floor panel thereon. The floor panel includes grooves into which the joist's flanges are disposed. The clip means includes a portion extending through a hole in the side wall of the joist and into a hole in the beam. The bottom wall of the joist includes a hole which is aligned with a hole in the ledge

of the beam and through which another portion of the clip extends.

Other objects and many of the attendant advantages of this invention will be readily appreciated as the same becomes better understood by reference to the following detailed description when considered in connection with the accompanying drawings wherein:

FIG. **1** is a perspective view of a portion of a floor support assembly in accordance with this invention;

FIG. **2** is a perspective view of an end portion of a floor joist and associated connecting clip like that shown in FIG. **1**;

FIG. **3** is an enlarged sectional view taken along line **3—3** of FIG. **1**;

FIG. **4** is an enlarged sectional view taken along line **4—4** of FIG. **3**;

FIG. **5** is a perspective view of a portion of a floor support assembly utilizing a beam section which not only supports the floor joist thereon but also acts as a heating and/or cooling duct;

FIG. **6** is a perspective view of a portion of a pair of interconnected floor support assemblies, said assemblies and interconnecting beams serving as a heating and/or cooling duct system; and

FIG. **7** is a perspective view of a portion of a hollow floor support beam section showing its connection in a heating and cooling system of a housing structure.

Referring now in greater detail to the various figures of the the drawing wherein like reference characters refer to like parts, a floor support assembly in accordance with one aspect of this invention is shown generally at **20** in FIG. **1.**

Assembly **20** basically comprises a beam **22,** an elongated floor joist **24** and a locking anchor or clip **26.** The assembly is arranged to support a floor of a housing structure. To that end, the joist is supported by a ledge portion of the beam and is connected thereto by clip **26.** The floor joist includes ledges upon which a floor panel is disposed.

In accordance with the preferred embodiment of this invention, both the beam **22** and the joist **24** are formed of roll steel stock, such as **20** gauge roll steel stock, and can be readily fabricated when needed. This feature is of considerable importance in the housing construction industry where heretofore the maintenance of large inventories was required in order to permit the construction buildings from standard-type parts. Needless to say, such large parts inventories result in increased overall building costs due to the increased storage and handling costs attendant with such inventories. Furthermore, by eliminating large inventories, the problem of having surplus parts left over once the building is completed, is minimized, if not eliminated.

As can be seen in FIG. **1,** beam **22** is an enlongated member and includes a wall portion **28** from which a lower ledge **30** projects normally. The lower ledge serves as the means for supporting joist **24** in assembly **20.** A short wall **32** extends from the lower ledge and is generally parallel to wall **28.** The short wall serves as a strengthening portion of the beam. A back ledge **34** extends away at an angle from the short wall **32.** The back ledge terminates in a lower flange **36** having a plurality of slots **38** therein.

Beam **22** also includes an upper ledge **40** which is parallel to the lower ledge **30** and extends in the opposite direction thereto. The upper ledge aids the joist in supporting a floor panel and terminates in an upper flange **42** also having a plurality of slots **38** therein. The upper flange **42** is coplanar with lower flange **36.**

As will be considered in detail later, the flanges and their associated slots serve as a means for connecting the beam to other structural members, such as similar beams.

The floor joist **24** is an elongated member including a base or a bottom wall portion **44** extending the length of the joist and a pair of side walls **46** extending therealong and projecting at an angle to the bottom wall to form a generally V-shaped cross section. In accordance with a preferred embodiment of the joist of this invention, each of the side walls project at an angle of between 95 and 105°. In the embodiment shown in the drawing, the angle is approximately 100°.

Each side wall of the floor joist terminates in a ledge **48** which extends along the side wall and is parallel to the bottom wall. The ledges are coplanar and are adapted for directly supporting thereon a planar floor panel **50,** as will be described later.

As can be seen in FIG. **1,** one end of floor joist **24** is supported on ledge **30** of beam **22,** via a portion of the bottom wall **44** at the end of the joist, with the end of the joist abutting wall **28** of the beam. The other end of the floor joist is similarly supported on another ledge beam **22** (not shown).

The height of the floor joist **24** is slightly greater than the length of the wall **28** of beam **22.** Accordingly, when joist **24** is supported on the beam, via its ledge **30,** the joists' ledges **48** are disposed slightly above the upper ledge **40** of the beam.

The manner in which the floor joist **24** supports floor panel **50** can best be appreciated with reference to FIG. **4.** As can be seen therein, floor panel **50** includes a pair of grooves **52** in the underside of the panel. The grooves extend the length of the panel and each is adapted to receive therein a respective joint ledge **48,** with the joist ledge in direct contact with the bottom of the groove. In so doing, the ledges serve to directly support the floor panel thereon. Furthermore, the coaction of the ledges and the grooves hold the floor panel in place. Once held in place, the floor panel may be secured to the joist via conventional attachment means (not shown).

The portions of the floor panel between the grooves adjacent the ends of the panel, one of which being denoted by reference numeral **54** in FIG. **4,** are disposed on beam ledge **40** when the joists' ledges **48** are disposed in the associated panel grooves **52.** Hence, beam ledge **40** aids the joist in supporting the floor panel.

The general V-shape of the joist gives the joist substantial strength for supporting the floor panel, while enabling the joist to be relatively light in weight. These features make the joist ideal for use in constructing buildings with relatively unskilled labor and without special tools or heavy equipment.

A pair of locking clips **26** serve to rapidly and securely connect the joist **24** to the beam **22** and for locking the joist in place. The clips are held in place within holes in the joist. To that end and as can be seen in FIGS. **2** and **4,** joist **24** includes a pair of holes or openings **56** in its bottom wall immediately adjacent the end of the joist. Each of the holes is disposed adjacent a respective side wall. A similar pair of holes (not shown) is provided in the bottom wall immediately adjacent the other end of the joist. Furthermore, each side wall **46** of the joist includes an elongated opening or slot **58**

which is disposed near the top of the side wall at the end of the joist.

Portions of one locking clip **26** are disposed within one of the slots **58** and an associated opening **44** of joist **24** and portions of the other locking clip are disposed within the other of the slots **58** and openings **44.**

As can be seen in FIG. **2,** each locking clip **26** comprises an elongated body portion **60** having one end from which a long leg **62** projects normally and another end from which a short leg **64** projects in the opposite direction as the long leg. The long leg includes a main portion **66** and an offset portion **68.** The offset portion terminates in a locking ear **70** projecting parallel to the body portion **60** of the clip. The short leg **64** includes a main portion **72** and an offset portion **74.**

The manner in which the clips **26** are connected to the joist **24** is shown in FIG. **2,** with one clip being shown disconnected from the joist.

As can be seen, the body portion **60** of clip **26** is disposed within the V-shaped joist adjacent its end. The main portion of long leg **62** extends through slot **58** so that the offset portion **68** and its associated locking ear **70** project away from the joist in a generally longitudinal direction. The main leg portion **72** of the short leg of the clip is disposed on a portion of the bottom wall contiguous with the hole **56.** The offset portion **74** of the short leg passes through the hole **56** and extends in a direction generally parallel to the plane of the bottom wall **44.**

The clips **26** are each formed of a resilient steel to enable slight flexure thereof. Such flexure is necessary in order to effectuate the connection of the clip to the beam as will be described later.

Beam **22** includes a plurality of relatively large holes or openings **76** in its lower ledge **30,** only one of which can be seen in FIG. **1,** which receive the offset portions **74** of the short legs **64** of the clips in order to aid in the connection of the joist to the beam. To that end, as can be seen in FIGS. **3** and **4,** the end of the joist **24** is positioned on ledge **30** of beam **22** in a manner such that the holes **56** of the joist overlie one opening **76** in the beam. When the clips are disposed in the joists' holes as described above, the offset portion **74** of the clips not only extend through the joist's holes **56** but also through the beam opening **76.** The distance which the offset portion **74** of the short leg is offset from the main portion **72** is made such that the main portion **72** abuts the inside surface of the bottom wall **44** of the joist and the offset portion **74** abuts the inside surface of the base, thereby holding the clip is place.

As can be seen in FIG. **1,** the upper ledge **40** of the beam includes a plurality of holes **78** generally aligned adjacent each ledge opening **76.** The holes **78** are adapted to receive the locking ears of the clips **26** therein, to complete the connection and the locking of the joist to the beam once the short leg portions of the clips are held in place as described above.

The locking of the long leg ears within the associated holes **78** in the beam **24** is accomplished by flexing the long legs **62** of the clip slightly upward over the ledge **40** so as to position each of the ears over a respective hole **78** therein. Upon releasing the long leg portions, they return to their unflexed condition and the ears move into the holes **78,** thereby locking the clips **26** in place.

As should thus be appreciated, the floor joist **24** can be easily and rapidly connected to the beam **22** and locked in place utilizing the novel clips of this invention and without the need for other fastening means. Furthermore, while each end of the joist **24** is shown as being connected by a pair of locking clips **26,** it is to be understood that an integral clip, configured like a wishbone, can be utilized in lieu of the two separate clips shown.

In FIG. **5** there is shown the manner in which two beams **22** are connected together to form a hollow beam section **80** which is operative for not only supporting the floor joists **24** thereon, but also for acting as a duct carrying heating and cooling air throughout the building structure.

As can be seen therein, two beams **22** are connected together at their upper and lower flanges **44** and **36,** respectively by generally U-shaped elongated beam spacers **82.** The beam spacers are connected and locked in place by spring clips **84.**

The details of the spring clips are disclosed in the aforementioned patent application entitled "Modular Building" and such disclosure is directly incorporated herein. Accordingly, the details of clip **84** will not be reiterated herein, suffice to state that each of the spring clips includes a body portion from which a tab portion extends at one end and a spring finger extends at the other end. The clip is adapted to snap into a pair of slots in a pair of members to be connected together. To that end, the tab portion is slipped into one of the slot pairs and the spring finger is passed through the other slot pair and allowed to move in a locking position.

The beam spacers include a pair of side walls **86,** each of which terminates in a flanged edge forming a channel **88.** The channels **88** are adapted for receiving and holding a flange of a beam **22.** As can be seen, the beam spacers include a plurality of slots **90** in the side walls **86.**

When the beam's flanges are disposed within the associated channels **88** in the interposed beam spacers **82,** with the slots **38** therein aligned with the slots **90** in the beam spacers, clips **84** are inserted into the aligned slots to lock the beams together.

In accordance with one aspect of this invention, the beam spacers may extend the entire length of the beam section **80** or may be interrupted to allow vertical strucural members to pass therebetween for supporting the horizontal beam sections **80.**

In accordance with the preferred embodiment of the invention, the vertical structural members are tubular supporting beams which also serve as heating and cooling ducts.

In FIG. **6** there is shown the manner in which one of the beam sections **80** and associated floor joists is supported above another beam section **80** and associated floor joists. As can be seen therein, one beam section and associated floor joists **24** is supported above a similar beam section and associated floor joists by a vertically extending tubular post **92.** Post **92** is operative to not only support the beam sections **80** but also to carry either hot or cold air to the beam sections and to intermediate points for distribution throughout the building structure.

As can be seen, the vertical tubular post **92** comprises two double-channelled, half sections **94** having a pair of end flanges **96** extending therealong. Each of the end flanges **96** include a plurality of slots **98** to enable the flanges to be connected together by spring clips **84** to form the post. The connected double-

channel half sections form a post having a pair of ducts **100** extending therealong.

The post **92** also includes a plurality of small slots (not shown) which are horizontally disposed adjacent one another and aligned with slots **38** in the flanges **36** and **42** of beam **80.** These slots serve as the means for supporting beam **80** on vertical post **92.** To that end, spring clips **84** are inserted in the aligned slots thereby connecting and locking beam **80** with respect to post **92.**

Portions of the adjacent upper and lower flanges of the beam section **80** between the vertical beams are connected by beam spacers **82** in the manner as previously discussed. The beam spacers include a slot (not shown) in the bottom wall of the U-shaped member to accommodate the flanges **96** of the vertical post **92** and to enable the spacers **82** to abut the vertical post **92.**

As can be seen in FIG. **6,** each duct of the vertical post includes a plurality of large distributor openings **102** for enabling air passing through the duct **100** to exit therefrom. A pair of distributor openings **102** is provided within the vertical post portion within the hollow beam secton **80.** Accordingly, air is enabled to flow horizontally through the beam sections **80** and then vertically through the vertical post **92** for distribution throughout the building structure.

In FIG. **7** there is shown the manner in which heating and cooling air is introduced into the tubular post section for distribution throughout the building structure.

As can be seen, a beam section **80** is formed of a pair of beams **22** connected together, via their flanges **36** and **42** by beam spacers **82** and by spring clips **84,** in the same manner as previously described.

The heat and/or cooling unit for the building structure is not shown but is connected to a plenum chamber **104.** The plenum chamber includes an opening **106** through which hot or cold air exits the chamber. A flared duct **108** is connected to the opening **106** in the plenum chamber. The duct includes a rectangular walled mouth **110.** The mouth includes a pair of walls **112** separated by the same distance as spacing between the associated flanges **36** of beam **20** so that the mouth's wall fit between the flanges of the beam. The walls **112** include a plurality of slots **114** which are aligned with slots **38** in the beam's flanges to enable the walls to be connected to the beam section **80.** Accordingly, hot or cold air from the plenum chamber is enabled to flow through the duct **108** and mouth **110** into the interior beam **80** and from thence throughout the building structure.

As should be appreciated from the foregoing description, the floor support assemblies in accordance with this invention are relatively simple and inexpensive, can be fabricated when needed, can be readily assembled and locked in place utilizing simple clips, without skilled labor and without special tools and serve as not only structural supports but also as the heating and/or cooling system of the housing structure. All of the above features make the floor support assembly and component beams, joists and clips ideal building components for producing low cost, yet attractive buildings of various overall designs.

Without further elaboration, the foregoing will so fully illustrate our invention that others may, by applying current or future knowledge, readily adapt the same for use under various conditions of service.

What is claimed as the invention is:

1. In a floor structure including a floor panel floor support assembly comprising a beam having an opening therein and including a first ledge, an elongated floor joist adapted for supporting said floor panel directly thereon and including a bottom wall and a pair of side walls, a portion of said bottom wall being disposed upon and supported by said first ledge and detachable, resilient locking clip means located between said floor joist and said beam and including an end portion snap fit into said opening for connecting said floor joist to said beam and for locking said floor joist in place with respect to said beam.

2. The assembly of claim **1** wherein each of said side walls of the joist include a ledge, said ledges being coplanar and being adapted for supporting said panel thereon.

3. The assembly of claim **2** wherein said panel includes a pair of grooves in which said joist ledges are disposed.

4. The assembly of claim **2** wherein said side walls extend at an angle to said bottom wall so as to form a generally V-shaped member.

5. The assembly of claim **1** wherein at least one of said side walls includes an opening therein through which a portion of said clip means extends.

6. The assembly of claim **5** wherein said beam includes an opening through which another portion of said clip means extends.

7. The assembly of claim **1** wherein the clip means comprises a pair of clips, each of said side walls includes an opening through which a portion of a respective clip extends, said ledge includes an opening, said bottom wall of the joist includes a pair of openings, each of which being disposed over the opening in the ledge, each of the clips including a portion extending through respective openings in the bottom wall of the joist and the aligned opening in the ledge of the beam.

8. The assembly of claim **7** wherein each of said clips includes an elongated body portion, a short leg projecting at an angle therefrom and a long leg projecting at an opposed angle therefrom, said long leg terminating in a projecting ear, each of said short legs extending through respective openings in the bottom wall of the joist and the aligned opening in the ledge of the beam with the projecting ears of the respective long legs disposed within respective openings in the beam.

9. A floor support assembly comprising a beam having an opening therein and including a first ledge having an opening therein, an elongated floor joist adapted for supporting a floor panel directly thereon and including a bottom wall having an opening therein and a pair of side walls, at least one of said side walls including an opening therein, a portion of said bottom wall being disposed upon and supported by said ledge with the opening in the bottom wall being aligned with the opening in said ledge, and locking clip means for connecting said floor joist to said beam, said clip means including a portion extending through said aligned openings, a portion extending through the opening in said side wall of the joist and a portion extending into the opening in said beam.

10. The assembly of claim **9** wherein said clip includes an elongated body portion, a short leg projecting at an angle therefrom and a long leg projecting at an opposed angle therefrom, said long leg terminating in a projecting ear, said short leg extending through said aligned openings, said long leg extending through said opening in the joist side wall with the projecting ear disposed within the opening in the beam.

* * * * *