US008348566B2

(12) **United States Patent**
Pratt

(10) **Patent No.: US 8,348,566 B2**
(45) **Date of Patent: Jan. 8, 2013**

(54) **BLIND FASTENER**

(75) Inventor: **John D. Pratt**, Laguna Niguel, CA (US)

(73) Assignee: **Monogram Aerospace Fasteners, Inc.**, Los Angeles, CA (US)

(*) Notice: Subject to any disclaimer, the term of this patent is extended or adjusted under 35 U.S.C. 154(b) by 111 days.

(21) Appl. No.: **12/760,682**

(22) Filed: **Apr. 15, 2010**

(65) **Prior Publication Data**

US 2011/0123289 A1 May 26, 2011

Related U.S. Application Data

(63) Continuation of application No. PCT/US2008/080114, filed on Oct. 16, 2008.

(60) Provisional application No. 60/999,889, filed on Oct. 22, 2007.

(51) **Int. Cl.**
F16B 13/04 (2006.01)

(52) **U.S. Cl.** **411/38**; 411/42

(58) **Field of Classification Search** 411/38, 411/42, 34, 353, 44, 46, 51, 55, 75
See application file for complete search history.

(56) **References Cited**

U.S. PATENT DOCUMENTS

3,267,793	A *	8/1966	Devine et al.	411/51
3,369,289	A *	2/1968	Gapp	29/512
4,457,652	A	7/1984	Pratt	
4,607,992	A *	8/1986	Mauritz et al.	411/45
4,844,673	A	7/1989	Kendall	
5,152,648	A	10/1992	Pratt	
5,498,110	A	3/1996	Stencel et al.	
6,547,500	B2	4/2003	Cosenza et al.	
6,846,141	B2	1/2005	Heinzelmann et al.	
2004/0022596	A1	2/2004	Belanger	
2006/0062650	A1 *	3/2006	Keener	411/34

OTHER PUBLICATIONS

International Search Report and Written Opinion issued May 22, 2009 related to PCT/US2008/080114.

* cited by examiner

Primary Examiner — Gary Estremsky
(74) *Attorney, Agent, or Firm* — Woodard, Emhardt, Moriarty, McNett & Henry LLP

(57) **ABSTRACT**

Disclosed is a blind fastener that includes a body, a bolt and a sleeve that has an internal recess that contains an insert. The body includes a tapered ramp that the sleeve is enlarged over. Compression of the sleeve against the work piece causes the sleeve to fold at the internal recess to form an enlarged blind side head that bears against the work piece.

21 Claims, 6 Drawing Sheets

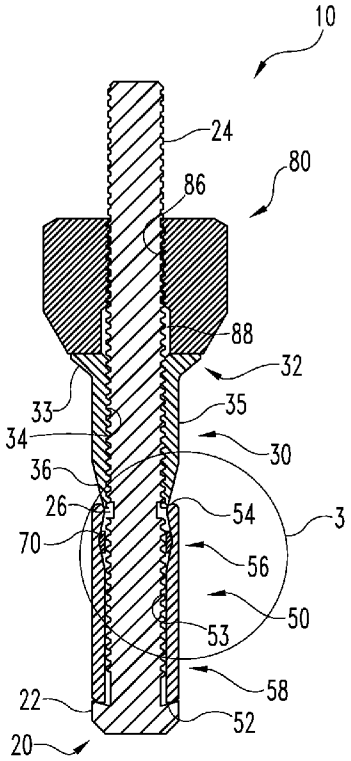

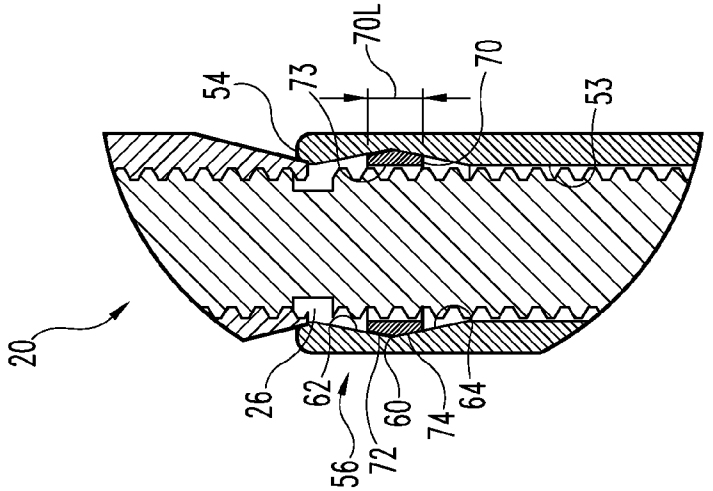

Fig. 3

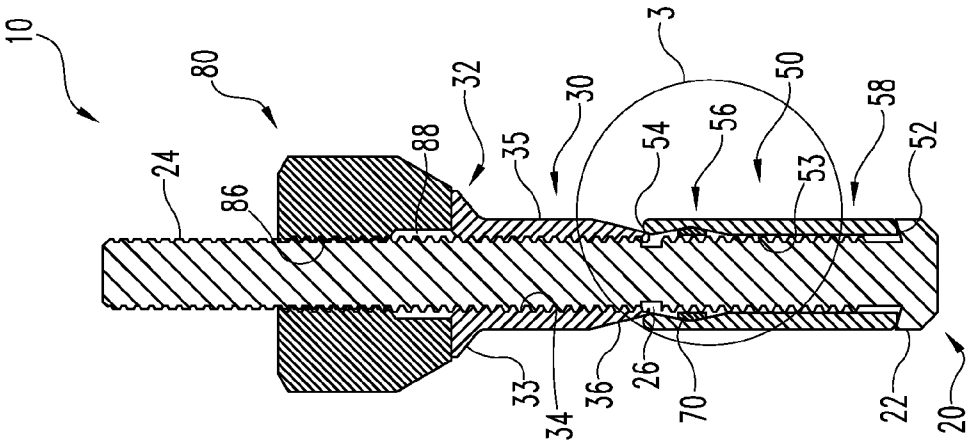

Fig. 2

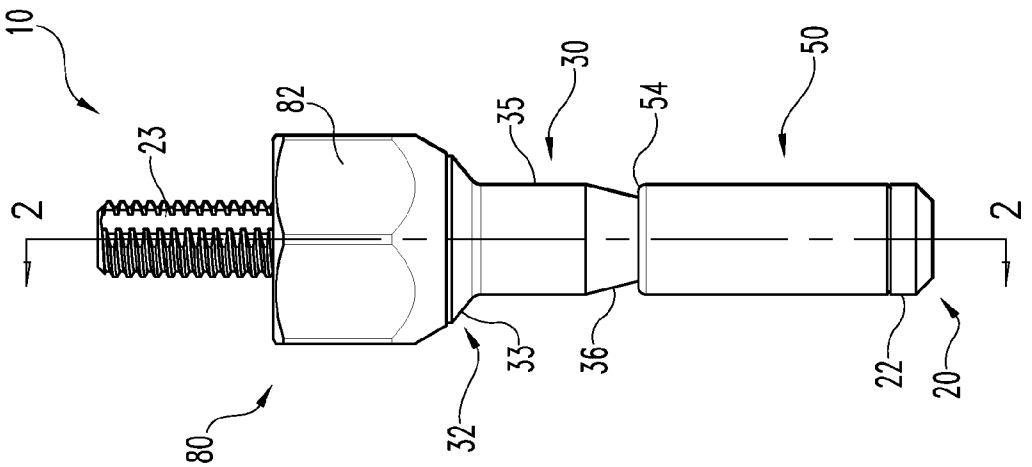

Fig. 1

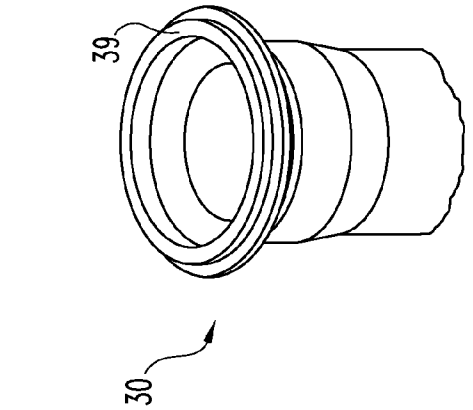

Fig. 8

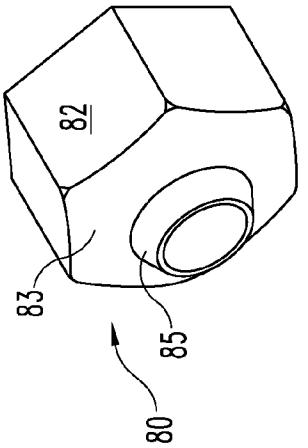

Fig. 7

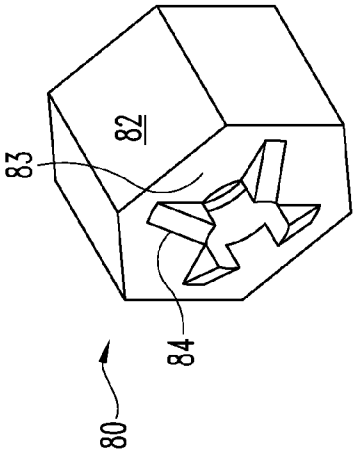

Fig. 6

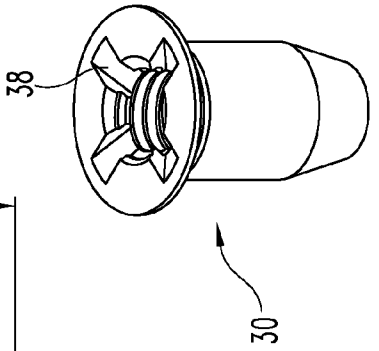

Fig. 5

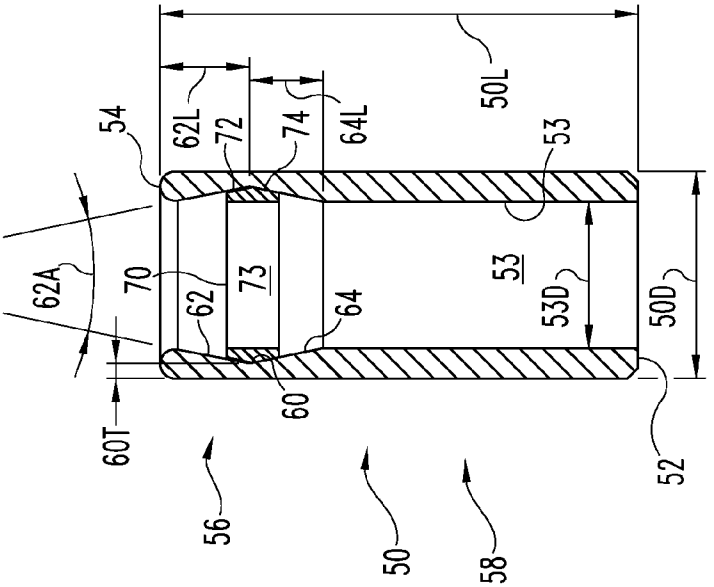

Fig. 4

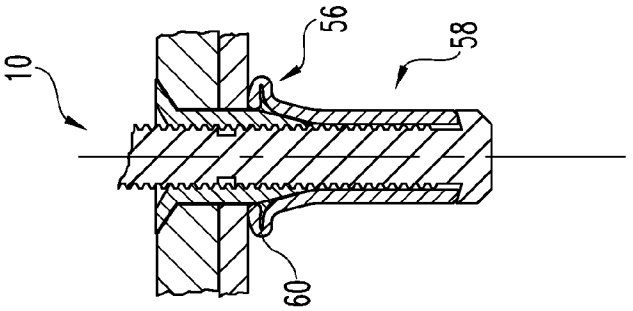

Fig. 9e

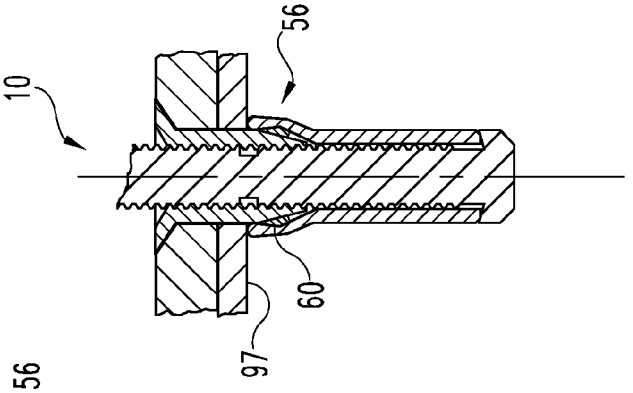

Fig. 9d

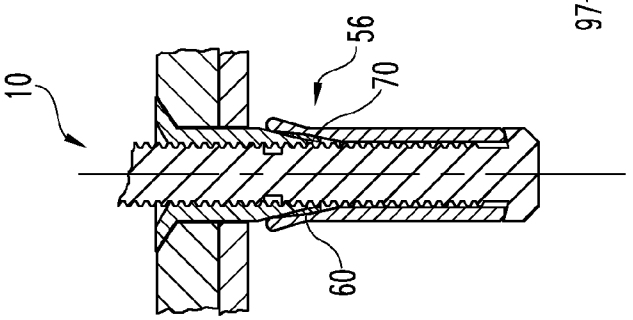

Fig. 9c

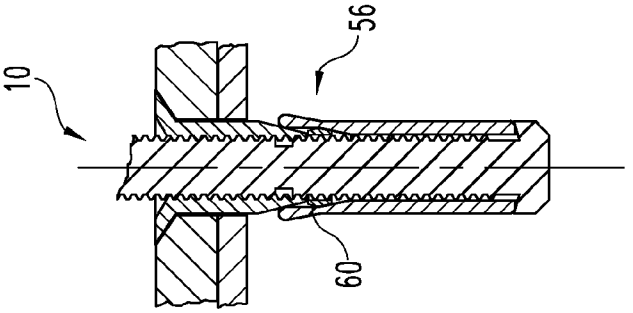

Fig. 9b

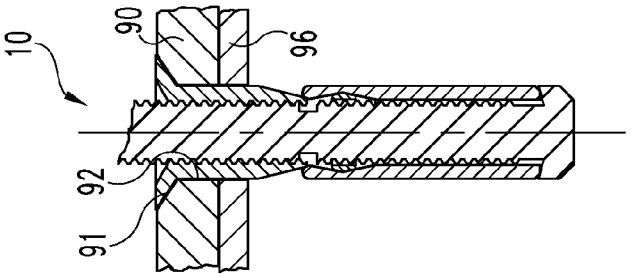

Fig. 9a

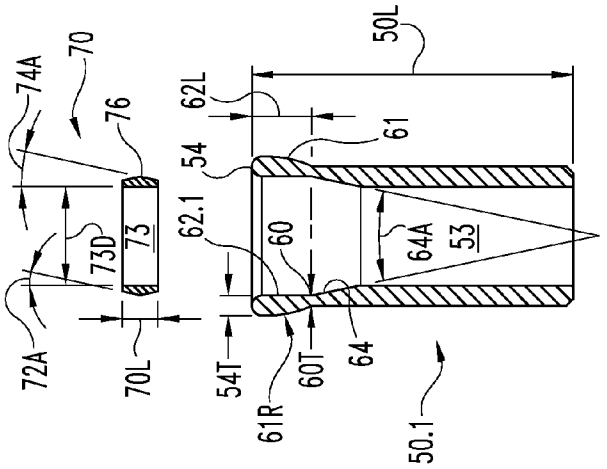

Fig. 13

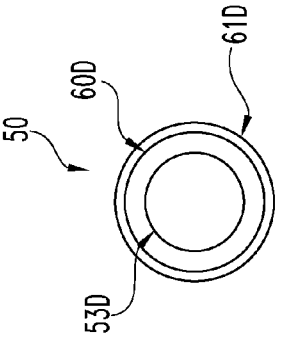

Fig. 14

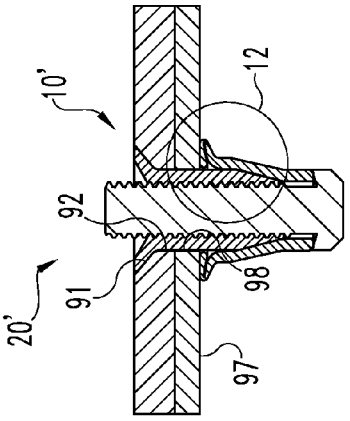

Fig. 11

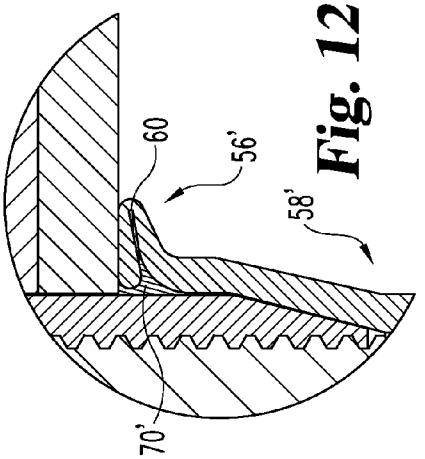

Fig. 12

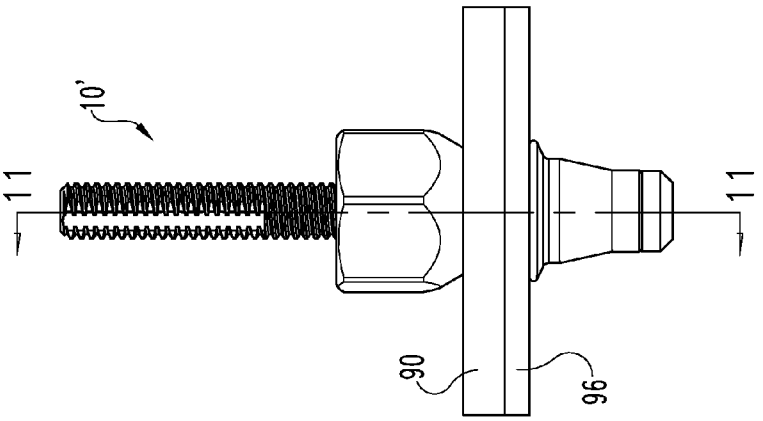

Fig. 10

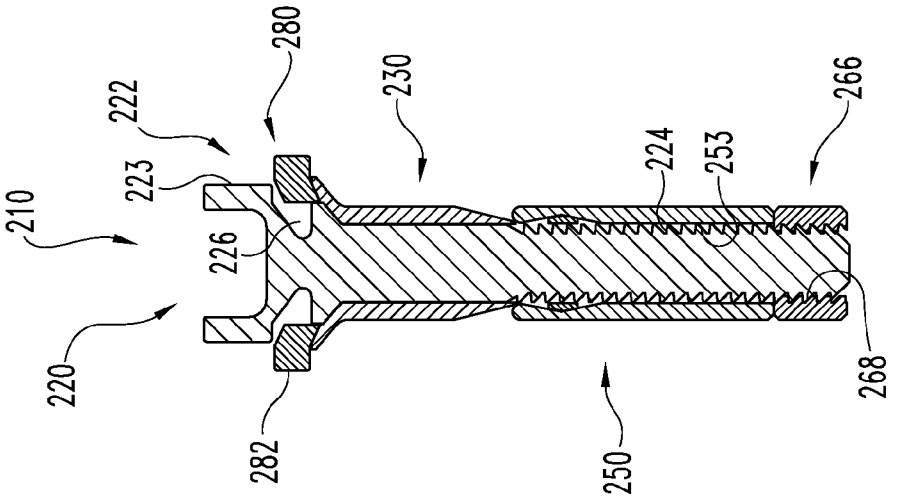

Fig. 18

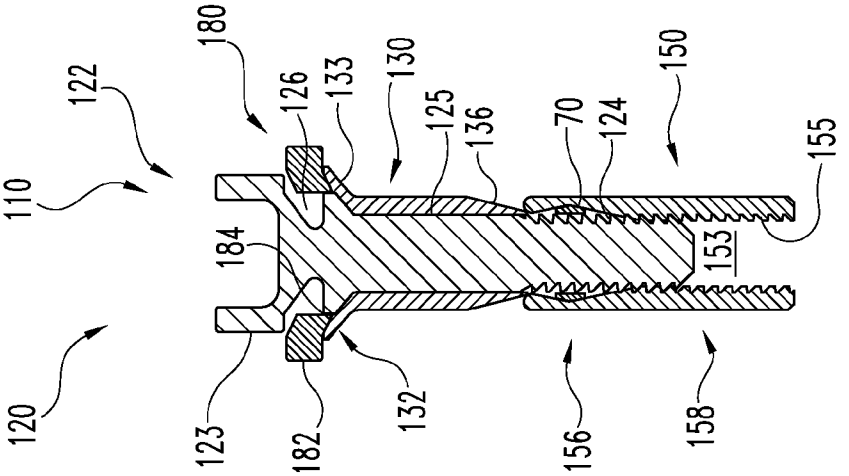

Fig. 16

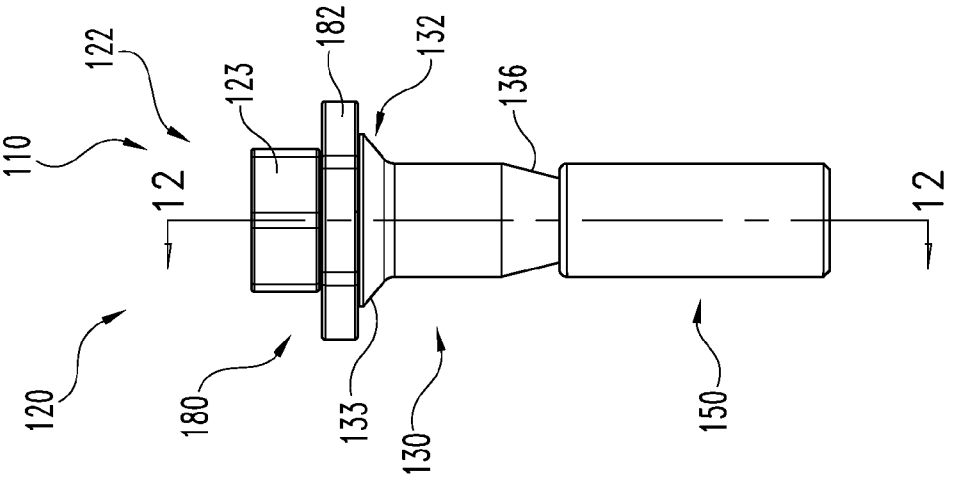

Fig. 15

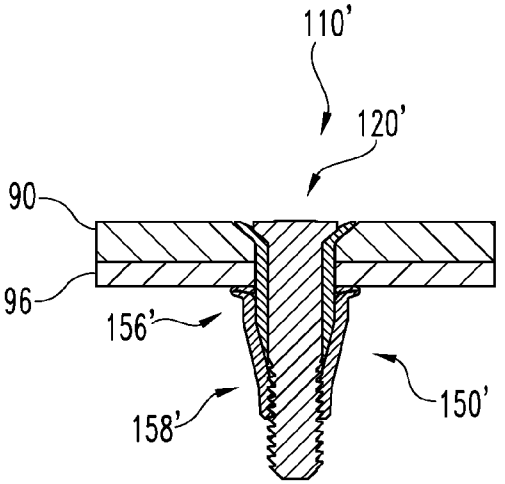
110'
120'
90
96
156'
158'
150'

Fig. 17

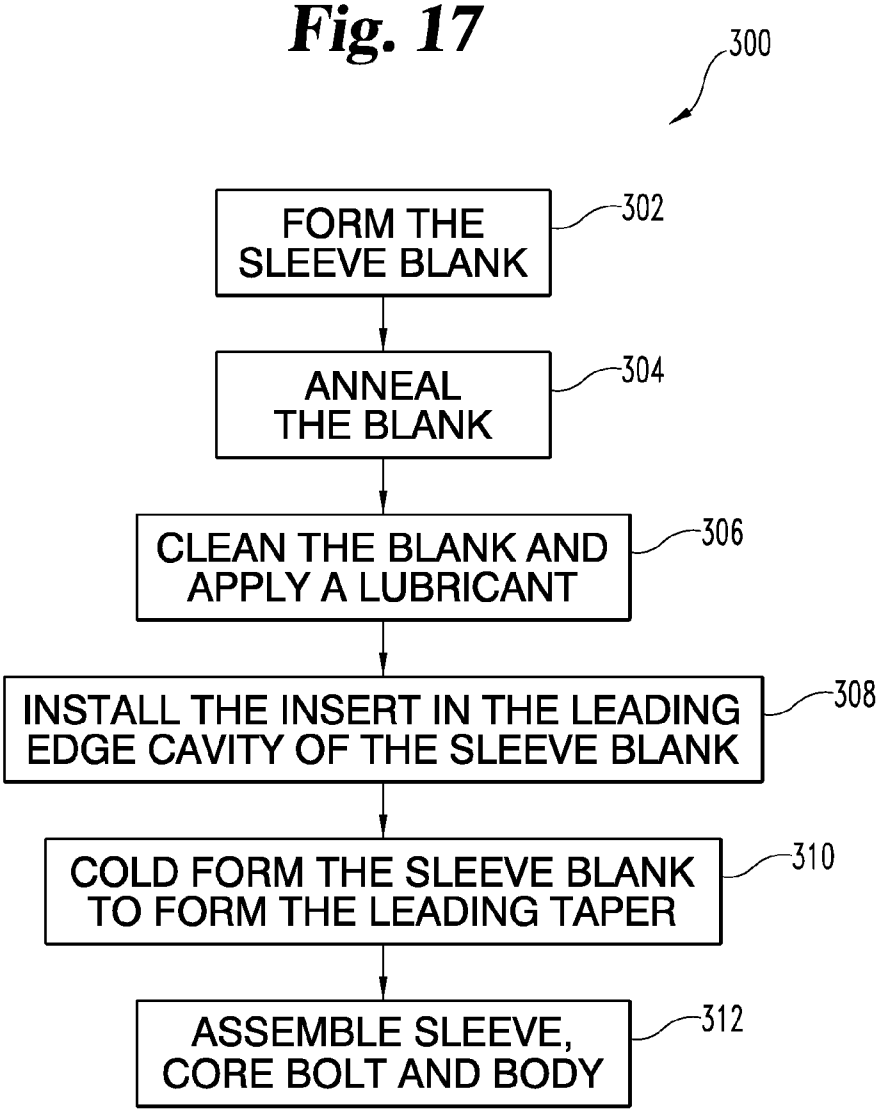
300
FORM THE SLEEVE BLANK
302
ANNEAL THE BLANK
304
CLEAN THE BLANK AND APPLY A LUBRICANT
306
INSTALL THE INSERT IN THE LEADING EDGE CAVITY OF THE SLEEVE BLANK
308
COLD FORM THE SLEEVE BLANK TO FORM THE LEADING TAPER
310
ASSEMBLE SLEEVE, CORE BOLT AND BODY
312

Fig. 19

BLIND FASTENER

This application is a continuation of International Application No. PCT/US2008/080114, filed Oct. 16, 2008, which claims the benefit of U.S. Provisional Application No. 60/999,889, filed Oct. 22, 2007, both of which are hereby incorporated by reference.

FIELD OF THE INVENTION

The present invention relates to a blind fastener.

BACKGROUND OF THE INVENTION

Blind fasteners can be used to connect two or more components together when access is limited to one side of the components. Blind fasteners are also used with robotic assembly equipment to eliminate the need to coordinate activity on both sides of a fastener. By way of example, blind fasteners are used to attach panels to other components to make wings, flaps, ailerons and other airframe structures. Fasteners used on aerodynamically critical surfaces generally have flush heads that seat into machined or dimpled countersinks in the outer panel. Fasteners used in interior assemblies may have generally protruding heads.

Specifically regarding aircraft construction, modern aircraft are generally constructed of aluminum and laminated composite panels and structural shapes. Laminated composites, while possessing superior stiffness and strength, are prone to crushing damage unless forces are spread over enough area to minimize localized compressive stresses. In this regard, it is also important for localized compressive forces to be spread substantially uniformly over the affected area to minimize local compressive damage. Thus, in applications involving laminated composites, the size and configuration of the blind side head are important performance parameters. Fasteners with inadequate blind side heads may require thicker (and heavier) composite panels than an equivalently sized fastener with an adequately sized and configured blind side head.

BRIEF DESCRIPTION OF THE DRAWINGS

FIG. **1** is a side elevational view of a blind fastener.

FIG. **2** is a cross-sectional view of the FIG. **1** blind fastener as viewed along line **2-2**.

FIG. **3** is an enlarged view of the encircled partial view of FIG. **2**.

FIG. **4** is a side cross-sectional view of sleeve **50** of FIG. **1**.

FIG. **5** is a top perspective view of body **30** of FIG. **1**.

FIG. **6** is a bottom perspective view of drive nut **30** of FIG. **1**.

FIG. **7** is a bottom perspective view of an alternative embodiment of drive nut **80** of FIG. **1**.

FIG. **8** is a top perspective view of an alternative embodiment of body **30** of FIG. **1**.

FIG. **9***a* is a cross-sectional view of blind fastener **10** partially installed through work pieces.

FIG. **9***b* is a cross-sectional view of blind fastener **10** partially installed through work pieces.

FIG. **9***c* is a cross-sectional view of blind fastener **10** partially installed through work pieces.

FIG. **9***d* is a cross-sectional view of blind fastener **10** partially installed through work pieces.

FIG. **9***e* is a cross-sectional view of blind fastener **10** partially installed through work pieces.

FIG. **10** is a side elevational view of blind fastener **10** installed through work pieces but prior to separation of the wrenching components.

FIG. **11** is a cross-sectional view of the FIG. **10** installed blind fastener as viewed along line **11-11** without the wrenching components.

FIG. **12** is an enlarged view of the encircled partial view of FIG. **11**.

FIG. **13** is a side cross-sectional view of sleeve **50** in an intermediate manufacturing configuration.

FIG. **14** is an end view of sleeve **50** of FIG. **13**.

FIG. **15** is a side elevational view of blind fastener **110**.

FIG. **16** is a cross-sectional view of the FIG. **15** blind fastener as viewed along line **12-12**.

FIG. **17** is a cross-sectional view of blind fastener **110** installed through work pieces.

FIG. **18** is a side cross-sectional view of blind fastener **210**.

FIG. **19** is a flow diagram of a manufacturing method.

DETAILED DESCRIPTION OF THE DRAWINGS

For the purpose of promoting an understanding of the disclosure, reference will now be made to certain embodiments thereof and specific language will be used to describe the same. It will nevertheless be understood that no limitation of the scope of this disclosure is thereby intended, such alterations, further modifications and further applications of the principles described herein being contemplated as would normally occur to one skilled in the art to which the disclosure relates. In several FIGs., where there are the same or similar elements, those elements are designated with the same or similar reference numerals.

Referring now to the drawings and in particular to FIGS. **1-3**, a blind fastener **10** is illustrated generally comprising core bolt **20**, body **30**, sleeve **50**, insert **70** and drive nut **80**. Core bolt **20** generally comprises head **22**, wrenching portion **23**, male threaded portion **24** and break groove **26**. Body **30** generally comprises head portion **32**, bearing portion **33**, female threaded portion **34**, outer surface **35** and tapered ramp **36**. Sleeve **50** generally comprises bottom edge **52**, bore **53**, leading edge **54**, bulbing portion **56** and base portion **58**. Sleeve **50** includes insert **70** positioned approximately within narrowed portion **60**. Sleeve **50** also includes narrowed portion **60** defined by leading taper **62** and trailing taper **64** in bore **53**. Insert **70** includes leading taper **72** and trailing taper **74** and bore **73**. Insert **70** has a length of **70**L, length **70**L generally exceeds twice the pitch length of the threads of the threads on male threaded portion **24** of bolt **20**. Drive nut **80** includes wrenching surfaces **82**, female threaded portion **86** and open bore **88**.

Blind fastener **10** is assembled with core bolt **20** passing through bore **53** with male threaded portion **24** threadingly engaged with female threaded portion **34** and female threaded portion **86**. Leading edge **54** abuts tapered ramp **36**.

Drive nut **80** and body **30** are rotationally constrained together (embodiments of which are illustrated below). In this regard, wrenching surfaces **23** can be engaged with a tool to rotate bolt **20** in a tightening direction relative to body **30** and drive nut **80**. Wrenching surfaces **82** can be engaged with a tool to restrict rotation of drive nut **80** and body **30** during installation of blind fastener **10** while core bolt **20** is being threaded through body **30** and drive nut **80**.

Blind fastener **10** can accordingly be installed by restraining drive nut **80** which restrains body **30** and then tightening core bolt **20** into drive nut **80** to advance head **22** towards body **30** which presses leading edge **54** over tapered ramp **36**. Continued tightening of core bolt **20** out of drive nut **80**

pushes sleeve **50** into contact with the blind side of the panel that fastener **10** is inserted through. Upon contact with the blind side panel, sleeve **50** and more particularly, bulbing portion **56**, buckle or bulb at narrowed portion **60** to form an enlarged head. When the blind head is sufficiently formed and clamped against the blind side panel, the torsional resistance in bolt **20** increases until the torsional strength of break groove **26** is exceeded which terminates the installation.

Referring now to FIG. **4**, a side cross-sectional view of sleeve **50** is illustrated. Sleeve **50** has an outer diameter of **50**D and a bore diameter of **53**D. Buckling portion **56** is defined by leading taper **62** between leading edge **54** and narrowed portion **60** and then trailing taper **64** between narrowed portion **60** and bore **53**. Leading taper **62** has a length **62**L while trailing taper **64** has a length **64**L with sleeve **50** having an overall length of **50**L. Leading taper **62** is a conical taper at angle **62**A. In one embodiment, this is only an approximation because leading taper **62** is actually parabolic in shape but can be approximated by a conical taper. Other embodiments may use an actual conical taper as illustrated.

Insert **70** is positioned between leading taper **62** and trailing taper **64**. Insert **70** includes leading taper **72** and trailing taper **74** with bore **73**. The angle of leading taper **72** is generally equal to the angle of leading taper **62**. Similarly, the angle of trailing taper **74** is generally equal to the angle of trailing taper **64**. Leading edge **54** has a rounded cross-section as illustrated. The embodiment illustrated in FIG. **4** bore **53** is substantially smooth. In other embodiments described herein, bore **53** may include female threads to match bolt **20**.

Sleeve **50** may be made of a malleable material that has the ability to bulb or expand a predetermined amount with fracturing. For example, polished and annealed AISI 304 stainless steel is able to undergo a strain of approximately 100% without fracture. Commercially pure titanium, other 300-series stainless steels and A-286 corrosion and heat resistance steel (CRES) may also be used. In any event, sleeve **50** is not deemed as limited to any specific material as one of ordinary skill in the art may appreciate other materials may be appropriate for deformable sleeve **40**.

Referring now to FIG. **5**, the top perspective view of body **30** is illustrated showing wrenching cavity **38**. Referring now to FIG. **6**, a bottom perspective view of drive nut **80** is illustrated showing protrusions **84**. In one embodiment, protrusions **84** are matched with wrenching cavities **38** so that drive nut **80** and body **30** are rotationally constrained together when assembled as illustrated in FIG. **2**. In the embodiment illustrated in FIGS. **5** and **6**, protrusions **84** and wrenching cavities **38** are in a cruciform configuration with shallow recesses to fit in the countersunk configuration of head portion **32**. However, other embodiments may utilize other configurations for wrenching cavity **38** and protrusions **84** as appropriate.

Referring now to FIGS. **7** and **8**, alternative embodiments of drive nut **80** and body **30** are illustrated. In particular, FIG. **7** illustrates drive nut **80** comprising underside **83** and deformable protrusion **85**. Deformable protrusion **85** is configured such that when drive nut **80** is tightened into a body **30** such as the body **30** illustrated in FIG. **5**, deformable portion **85** deforms to configure to wrenching cavities **83** to rotationally constrain drive nut **80** with body **30**. Similarly, FIG. **8** illustrates body **30** comprising deformable protrusion **39** that can deform to mate with protrusions **84** such as those on drive nut **80** illustrated in FIG. **6** to rotationally constrain body **30** and drive nut **80** together. Yet other embodiments of body **30** and drive nut **80** can use other means to resist relative rotation including, but not limited to disc friction at the mating surface or mechanical interface such as knurls on either or both surfaces.

Referring now to FIGS. **9***a* to **9***e*, blind fastener **10** is illustrated in sequential partially installed conditions through work pieces **90** and **96**. FIG. **9***a* illustrates the initial installation with blind fastener **10** being placed through work pieces **90** and **96** with head portion resting in countersunk recess **91** and sleeve **50** protruding on the blind side of work pieces **96**.

Referring now to FIG. **9***b*, bolt **20** has advanced onto body **30** with leading edge **54** positioned approximately half-way up ramp **36** with bulbing portion **56** beginning to deform with leading edge **54** expanding around tapered ramp **36**.

Referring now to FIG. **9***c*, clamp **10** is illustrated in a further insulation position with leading edge **54** near the top of tapered ramp **36** and insert **70** on the bottom of tapered ramp **36**.

Referring now to FIG. **9***d*, clamp **10** is illustrated in an intermediate installed position with leading edge **54** contacting bottom side **97** and sleeve **50** beginning to buckle at narrowed portion **60**.

Referring now to FIG. **9***e*, clamp **10** is illustrated in an intermediate installed position with bulbing portion **56** substantially bulbed such that narrowed portion **60** has buckled to form the outside of bulbed portion **56** and leading edge **54** bears against both outer surface **35** and bottom side **97**.

Referring now to FIGS. **10**, **11** and **12**, blind fastener **10** is illustrated installed through work pieces **90** and **96**. (FIG. **10** illustrates blind fastener **10** installed through work pieces prior to separation of wrenching components including drive nut **80** and the frangible portion of bolt **20**). In particular, sleeve **50** is deformed such that a bulbing portion **56'** is an enlarge blind side head and base portion **58'** substantially covers body **30**. The enlarged blind side head sits flat against bottom side **97** with bulbing portion **56'** folded such that leading taper **62** contacts trailing taper **64**. As illustrated in FIG. **12**, insert **70'** conforms to the interior space creating bulbing portion **56'**.

The installation of blind fastener **10** can be terminated by controlling the torque applied to bolt **20**. In the illustrated embodiment, installation torque can be controlled by break groove **26** that separates automatically upon application of a predetermined torque load. As illustrated in FIG. **11**, break groove **26** has fractured leaving stub bolt **20'**. Such fracture is designed to occur upon completion of the installation of blind fastener **10**, for example when the torque required to overdeform sleeve **50** exceeds the torsional strength of break groove **26**.

The illustrated embodiments of blind fastener **10** include a countersunk head portion **32** on body **30**. In other embodiments, head portion **32** can be a protruding type that will sit on the surface of the access side work piece.

The illustrated embodiments of blind fastener **10** also include drive nut **80** which is optional. Body **30** can be restrained from rotating by direct engagement with wrenching cavities **38** by an appropriate tool.

Referring now to FIGS. **13** and **14**, sleeve **50.1** depicts an intermediary manufacturing configuration of sleeve **50**. Sleeve **50.1** comprises a generally cylindrical tube with bore **53** that transitions to enlarged bore **62.1** through trailing taper **64** at angle **64**A. Protrusion **61** outside of enlarged bore **62.1** bulbs beyond the rest of sleeve **50** with a radiused profile as illustrated. The radius of the radiused profile of protrusion **61** is **61**R. The maximum diameter of sleeve **50.1** is **61**D, which is the largest diameter of protrusion **61**. Enlarged bore **62.1** has a diameter of **60**D, which may be substantially equal to the diameter of narrowed portion **60** of sleeve **50**.

Insert **70** comprises a generally cylindrical insert manufactured of deformable material, for example plastic. Insert **70** has a bore **73** with diameter **73**D that is substantially equal to

diameter **53**D. The outside of insert **70** is defined by leading taper **72** angled at angle **72**A and trailing taper **74** angled at angle **74**A. Leading taper **72** and trailing taper **74** meet at point **76**. The outer diameter of point **76** is approximately equal to diameter **60**D.

Insert **70** is inserted through enlarged bore **62.1** to narrowed portion **60** with point **76** generally being aligned with narrowed portion **60**. The manufacture of sleeve **50.1** may then be completed by crimping, swaging or roll forming protrusion **61**. In one embodiment the diameter of protrusion **61** is reduced to be substantially equal to diameter **50**D. By way of example only, U.S. Pat. No. 5,152,648 issued to John D. Pratt on Oct. 6, 1992 discloses one method of cold forming a protrusion on a sleeve by pressing the sleeve through a forming die. Another method of forming is to crimp the leading edge in a collet such as a C5 collet commonly used to hold stock on metal working lays. After forming, sleeve **50** then can be assembled with core bolt **20** and body **30** as described above.

Referring now to FIGS. **15** and **16**, blind fastener **110** is illustrated. Blind fastener **110** is an alternative embodiment of blind fastener **10**. Blind fastener **110** generally comprises bolt **120**, body **130**, sleeve **150** and drive nut **180**. Bolt **120** comprises head **122** with wrenching portion **123**, male threaded portion **124**, non-threaded portion **125** and break groove **126**. Body **130** comprises head portion **132**, bearing portion **133**, and tapered ramp **136**. Sleeve **150** comprises female threaded portion **155** in bore **153**, bulbing portion **156** and base portion **158**. Drive nut **180** comprises wrenching surfaces **182** and protrusions **184** that extend into recesses in body **130** that are not illustrated but may be similar to recesses **38**. Head **122** restrains drive nut **180** in position above body **130** with protrusions **184** in the matching recesses.

Sleeve **150**, body **130** and drive nut **180** are rotationally constrained together. Drive nut **180** and body **130** are rotationally constrained by protrusions **184** and mating recesses in body **30**. Body **30** and sleeve **50** may be rotationally constrained together using various methods known in the art including using knurled or other fractioned enhancers and/or mechanical interlocks therebetween to reduce relative rotation between body **130** and sleeve **150**. By way of example, this could include longitudinal knurls on ramp **136**.

Installation of bolt **110** is accomplished by inserting bolt **110** through the desired aperture, restraining sleeve **50** by holding wrenching surfaces **182** and then rotating bolt **120** with wrenching surfaces **123** to tighten bolt **120** with respect to sleeve **150**, drawing sleeve **150** over body **30** until bulbing portion **156** deforms to form an enlarged blind side head that clamps against the work pieces. Once the work pieces are fully clamped, break groove **126** fractures, permitting the removal of head **122** and drive nut **180**.

Referring now to FIG. **17**, blind fastener **110'** is illustrated which comprises a fully installed blind fastener **110** clamping pieces **90** and **96** together. Bulbing portion **156'** has fully deformed to form blind side clamping surfaces and base portion **158'** has deformed around sleeve **150**. Break groove **126** is fractured leaving bolt **120'** with a top edge that is substantially flush with the top surface of work piece **90**.

Referring now to FIG. **18**, yet another embodiment of a blind fastener is illustrated as blind fastener **210**. Blind fastener **210** generally comprises core bolt **220**, drive nut **280**, body **230**, sleeve **250** and nut **266**. Bolt **220** comprises head **222**, wrenching surfaces **223**, male threaded portion **224** and break groove **226**. Drive nut **280** comprises wrenching surfaces **282**. Sleeve **250** comprises bore **253** and nut **266** comprises female threaded portion **268**.

Drive nut **280**, body **230**, sleeve **250** and nut **266** are all rotationally constrained together as described above with regard to blind fastener **110**. Sleeve **250** is similar to sleeve **150** but with a smooth bore with the threaded region being replaced with nut **266** on the end of bolt **220**. A knurled interface between the sleeve and nut may be used to keep these two components rotationally restrained with respect to one another.

Referring now to FIG. **19**, method **300** is illustrated which depicts one series of steps to manufacture sleeve **50**. Method **300** begins with step **302** where a sleeve blank is formed. For example, sleeve **50.1** depicted in FIG. **13**. Sleeve blank **50.1** can be made of AISI 304 stainless steel or A286 or commercially pure titanium as suitable depending on the final requirements and terms of tensile strength and weight restrictions. Sleeve blank **50.1** can be machined or progressively formed on a cold heading machine as desired.

Method **300** continues with step **304** where the sleeve blank is annealed particularly with 304SS or A-286, to remove any cold working effects from step **302**. Step **304** is followed by step **306** where the sleeve blank is cleaned and a dry film lubricant is applied, for example, molybdenum-disulfide.

Method **300** continues with step **308** where insert **70** is installed in the leading edge cavity of sleeve **50.1** as illustrated in FIGS. **4** and **13**. The insert should be inserted fully into the cavity so that point **76** aligns with narrowed portion **60**.

Method **300** continues with step **310** where sleeve blank **50.1** is cold formed to generate leading taper **62** as described above. Step **310** can be accomplished by pressing sleeve **50.1** through a sizing guide or alternatively sleeve **51** can be crimped in a collet or any other method can be used as appropriate.

Method **310** concludes with step **312** where sleeve **50**, bolt **20** and body **30** are assembled as illustrated in FIGS. **1** and **2**.

FIGS. **4** and **13** reference several dimensions of the closed blind fastener. Many of these dimensions are scalable based on the diameter of the blind fastener and different size fasteners would have different performing blind side heads. In any event, the listed dimensions and how they would scale are as follows. The following dimensions are for a representative of a 3/16" (0.198 nominal OD) fastener. The body of such a fastener would have a nominal outer diameter of 0.198" and would fit in a hole or aperture between 0.199" and 0.202" in diameter.

Length **50**L is approximately 0.468". This dimension is not scalable as it includes additional length to provide an acceptable grip range for a particular fastener, for example, 0.050". The grip range may or may not scale with different size fasteners so the overall length of sleeve **50** is not directly dependent upon the diameter of blind fastener **10**.

Diameter **50**D equals 0.196 (0.002" smaller than the nominal outer diameter of the body) and this is the dimension that many of the following sleeve parameters can be scaled from for a different size fastener. Thickness **54**T is approximately 0.028 which is approximately 14% of **50**D. Diameter **53**D is approximately 0.140 which is approximately 71% of **50**D. Diameter **60**D is approximately 0.168 which is approximately 85% of **50**D. Thickness **60**T is approximately 0.015 which is approximately 8% of **50**D. Diameter **61**D is approximately 0.224 which is approximately 113% of **50**D. Radius **61**R is approximately 0.195 which is approximately 98% of **50**D. Length **62**L is approximately 0.085 which is approximately 43% of **50**D. Length **64**L is approximately 0.070 which is approximately 36% of **50**D. Length **71**L is approximately 0.050 which is approximately 25% of **50**D. Diameter

73D is approximately 0.143 which is approximately 71% of **50**D. Angle **62**A is approximately 18 degrees plus or minus 5 degrees. As discussed above, this is but an approximation as leading taper **62** may have a slight parabolic shape. Angle **64**A in one embodiment is also approximately 18 degrees plus or minus 5 degrees. In another embodiment, angle **64**A is between approximately 21 and 25 degrees. In yet other embodiments, angle **64**A may vary between 10 and 30 degrees. Angles **72**A and **74**A are both approximately 9 degrees (18 degrees if measured as a cone) although this can vary as appropriate with variations to angles **62**A and **64**A.

The fastener described above has an expanded blind side head with an approximate outer diameter of at least 0.350" up to 0.365" for a 0.316" fastener. The blind side head generally extends from the shank of body **30** out to this outer diameter, providing a grip surface area for 3/16" fastener of approximately 0.26 square inches.

Regarding wrenching portions **23**, **123** and **223** on bolts **20**, **120** and **220**, the illustrated embodiments utilize external flats that could be engaged by a wrench or socket type tool, as known in the art. In other embodiments (not illustrated), the illustrated wrenching portions **23**, **123** and **223** could be replaced with an internal hex-shaped recess such as an Allen® recess. Other embodiments (not illustrated) may incorporate other types of internal wrenching surfaces recess known in the art including: Pozidriv®, Torx®, Spline Drive, Double Hex or Triple Square recesses, to name a few non-limiting examples of internally recessed wrenching surfaces.

Embodiments utilizing internal recess could omit break grooves **26**, **126** and **226** and instead control installation torque by other means such as use of a torque wrench or a torque limited installation tool.

In any event, "wrenching portions" and "wrenching surfaces," as used herein, are intended to accommodate any known surface that can be used to engage a manual or automatic tool, including a cylindrical surface engageable by a one-way clutch or roller clutch. The blind fasteners disclosed herein can be used in both manual and automated applications. Use of cylindrical surfaces instead of wrenching flats makes it easier to use blind fasteners with automated installation robots. Conversely, in manual applications, human operators are adapt at adjusting parts as required to fit geometric wrenches, and geometric wrench apparatus are generally less expensive than one-way clutches. So other applications lend themselves to the use of conventional wrenching surfaces.

Regarding break grooves **26**, **126** and **226**, the geometrical configuration of the grooves or weakened regions can be varied to control the fracture characteristics of the various break grooves. If the tip of the break groove is sufficiently sharp, it acts as a stress concentration that may lead to a "brittle" type fracture. Conversely, if the tip of the break groove is sufficiently radiused or lengthened, then the amount of plastic deformation that occurs prior to fracture may increase, shifting the fracture to a ductile type tear. In any event, desirable performance characteristics for the break grooves can be found by balancing considerations such as bolt material and groove geometry.

As used herein, "above," "top," "second end" and "front side" refer to the head side of the blind fastener that includes the head portions of the bolt and body that is illustrated as located on the front side of the work pieces. Similarly, "bottom," "below," "first end" and "back side" refer to the side of the blind fastener that passes through the work pieces and may include the portions of the bolt, body and the sleeve that are located on the blind side of the work pieces.

The figures and illustrations included herewith are drawn to scale and represent a 3/16" size blind fastener.

While the disclosure has been illustrated and described in detail in the drawings and foregoing description, the same is to be considered as illustrative and not restrictive in character, it being understood that only the preferred embodiments have been shown and described and that all changes and modifications that come within the spirit of the disclosure are desired to be protected.

I claim:

1. A blind fastener with an initial configuration and a deformed configuration when installed, the initial configuration comprising:

a body comprising a tapered ramp portion and said body defining a body bore;

a sleeve comprising a sleeve bore, a leading edge portion, a base portion and a bulbing portion therebetween, wherein an inner diameter of said bulbing portion gradually increases as said bulbing portion extends away from said leading edge portion to a narrowed portion and then gradually decreases as said bulbing portion extends from said narrowed portion toward said base portion, and wherein said leading edge portion abuts said tapered ramp;

a core bolt passing through said body bore and said sleeve bore;

a deformable insert positioned between said core bolt and said narrowed portion; and

a means for advancing said sleeve over said body;

wherein said sleeve buckles radially outwardly at said narrowed portion and doubles on itself when said leading edge portion is obstructed from advancing along said body and said means continues to advance said sleeve over said body.

2. The blind fastener of claim **1**, wherein, in the initial configuration, the inner diameter of said bulbing portion increases in a first conical taper away from said leading edge portion to said narrowed portion.

3. The blind fastener of claim **2**, wherein, in the initial configuration, the inner diameter of said bulbing portion decreases in a second conical taper from said narrowed portion toward said base portion.

4. The blind fastener of claim **3**, wherein the angle of said second conical taper is between approximately 21 and 25 degrees.

5. The blind fastener of claim **3**, wherein the angle of said second conical taper is between approximately 10 and 35 degrees.

6. The blind fastener of claim **1**, wherein said leading edge portion further comprises a substantially rounded edge.

7. The blind fastener of claim **1**, wherein said sleeve is made from a metal selected from the group comprising: AISI 300-series stainless steel, A-286 and commercially-pure titanium.

8. The blind fastener of claim **1**, wherein, in the initial configuration, said deformable insert is trapped within the sleeve between said leading edge portion and said base portion.

9. The blind fastener of claim **1**, wherein said leading edge portion is substantially thicker than said narrowed portion.

10. The blind fastener of claim **1**, wherein said narrowed portion is approximately half as thick as said leading edge portion.

11. The blind fastener of claim **1**, wherein, in the initial configuration, the axial length between the narrowed portion and the start of the base portion is at least half the axial length between the leading edge portion and the narrowed portion.

12. The blind fastener of claim 1, wherein, in the initial configuration, the axial length between the narrowed portion and the start of the base portion is between approximately 75 and 90 percent of the axial length between the leading edge portion and the narrowed portion.

13. The blind fastener of claim 1, wherein, in the initial configuration, the axial length between the narrowed portion and the start of the base portion is approximately 82 percent of the axial length between the leading edge portion and the narrowed portion.

14. A blind fastener with an initial configuration and a deformed configuration when installed, the initial configuration comprising:

a body comprising a ramp portion and the body defining a body bore;

a sleeve comprising a sleeve bore, a leading edge portion at a first side, a base portion at a second side, a bulbing portion and a narrowed thickness portion in the bulbing portion, wherein an inner diameter of the bulbing portion gradually increases as the bore extends away from the first side toward the narrowed thickness portion and the inner diameter of the bulbing portion gradually decreases as the bore extends toward the second side from the narrowed portion;

a central member passing through the body bore and the sleeve bore; and

a deformable insert positioned between the central member and the narrowed portion;

wherein the sleeve buckles radially outwardly at the narrowed portion and doubles over on itself when the sleeve is compressed between the leading edge portion and the base portion.

15. The blind fastener of claim 14, wherein, in the initial configuration, the inner diameter of the bulbing portion increases in a first conical taper as the bulbing portion extends away from the first end to the narrowed portion.

16. The blind fastener of claim 15, wherein, in the initial configuration, the inner diameter of the bulbing portion decreases in a second conical taper as the bulbing portion extends from the narrowed portion toward the second side.

17. The blind fastener of claim 14, wherein the base portion is generally cylindrical in shape with a generally uniform inner diameter.

18. The blind fastener of claim 14, wherein the base portion further comprises an internally threaded portion that is threadingly engaged with an externally threaded portion on the central member, wherein the threaded engagement between the base portion and the central member facilitates advancing the sleeve over the body by rotating the central member with respect to the sleeve.

19. A blind fastener comprising:

a body comprising a ramp portion and the body defining a body bore;

a sleeve comprising a sleeve bore, a leading edge portion at a first side, a base portion at a second side, a bulbing portion and a narrowed thickness portion in the bulbing portion, wherein an inner diameter of the bulbing portion gradually increases as the bore extends away from the first side toward the narrowed thickness portion and the inner diameter of the bulbing portion gradually decreases as the bore extends toward the second side from the narrowed portion;

a central member passing through the body bore and the sleeve bore; and

a deformable insert positioned between the central member and the narrowed portion;

wherein the sleeve buckles radially outwardly at the narrowed portion and doubles over on itself when the sleeve is compressed between the leading edge portion and the base portion and wherein the leading edge portion further comprises a substantially rounded edge.

20. A blind fastener comprising:

a body comprising a ramp portion and the body defining a body bore;

a sleeve comprising a sleeve bore, a leading edge portion at a first side, a base portion at a second side, a bulbing portion and a narrowed thickness portion in the bulbing portion, wherein an inner diameter of the bulbing portion gradually increases as the bore extends away from the first side toward the narrowed thickness portion and the inner diameter of the bulbing portion gradually decreases as the bore extends toward the second side from the narrowed portion;

a central member passing through the body bore and the sleeve bore; and

a deformable insert positioned between the central member and the narrowed portion;

wherein the sleeve buckles radially outwardly at the narrowed portion and doubles over on itself when the sleeve is compressed between the leading edge portion and the base portion and wherein the leading edge portion is substantially thicker than the narrowed portion.

21. A blind fastener comprising:

a body comprising a ramp portion and the body defining a body bore;

a sleeve comprising a sleeve bore, a leading edge portion at a first side, a base portion at a second side, a bulbing portion and a narrowed thickness portion in the bulbing portion, wherein an inner diameter of the bulbing portion gradually increases as the bore extends away from the first side toward the narrowed thickness portion and the inner diameter of the bulbing portion gradually decreases as the bore extends toward the second side from the narrowed portion;

a central member passing through the body bore and the sleeve bore; and

a deformable insert positioned between the central member and the narrowed portion;

wherein the sleeve buckles radially outwardly at the narrowed portion and doubles over on itself when the sleeve is compressed between the leading edge portion and the base portion.

* * * * *