UNITED STATES PATENT AND TRADEMARK OFFICE

---

**BEFORE THE PATENT TRIAL AND APPEAL BOARD**

---

THERABODY, INC.,
Petitioner

v.

HYPERICE IP SUBCO, LLC
Patent Owner.

---

Case No. PGR2024-00053
U.S. Patent No. 11,857,482

---

**PETITIONER'S NOTICE OF APPEAL**

Pursuant to 37 C.F.R. § 90.2(a) and 35 U.S.C. § 142, Therabody, Inc. ("Therabody" or "Petitioner") hereby gives notice that it appeals the Patent Trial and Appeal Board's ("Board's") Final Written Decision, entered on April 20, 2026 (Paper No. 45) in the above-captioned Post Grant review of United States Patent No. 11,857,482 ("the '482 Patent") to the United States Court of Appeals for the Federal Circuit, including all underlying orders, decisions, rulings, and opinions that are adverse to Petitioner.

For the limited purpose of providing the Director with the information request in 37 C.F.R. § 90.2(a)(3)(ii), Petitioner's issues on appeal may include, but are not limited to: (1) the Board's determinations and applications of any express or implied constructions for the claim terms at issue to the prior art of record; (2) the Board's determination of patentability of claims 34–38, 40, 41, 43–46, and 58–60 under 35 U.S.C. § 112(a); (3) the Board's determination of patentability of claims 34–38, 40, 41, 43–46, and 58–60 under 35 U.S.C. § 112(b); (4) the Board's determination of patentability of claims 34, 35, and 58-60 of the '482 Patent under 35 U.S.C. § 103 in view of Mabuchi; (5) the Board's determination of patentability of claims 36-38, 40, 41, and 43-46 of the '482 Patent under 35 U.S.C. § 103 in view of Mabuchi and Harris; (6) the Board's determination of patentability of claims 37 and 38 of the '482 Patent under 35 U.S.C. § 103 in view of Mabuchi, Harris, and Pivaroff; (7) the

Board's determination of patentability of claims 34, 35, and 58-60 of the '482 Patent under 35 U.S.C. § 103 in view of Pivaroff and Mabuchi; (8) the Board's determination of patentability of claims 36-38, 40-41, and 43-46 of the '482 Patent under 35 U.S.C. § 103 in view of Pivaroff, Mabuchi, and Harris; and (9) the Board's legal errors in undertaking its obviousness analyses and application of the claim language to the prior art of record; (10) the Board's findings that conflict with the evidence of record and are not supported by substantial evidence, and (11) findings or determinations supporting or related to the aforementioned issues as well as all other issues decided adversely to Petitioner in any orders, decisions, rulings, phone conference decisions, and/or opinions.

Simultaneously with the submission, Petitioner is mailing a true and correct copy of this Notice of Appeal to the Director of the United States Patent and Trademark Office, and filing a true and correct copy of the same, along with the required docketing fee, with the Clerk of the United States Court of Appeals for the Federal Circuit.

Respectfully submitted,

*/s/ Marc J. Pensabene*
Marc J. Pensabene (Reg. No. 37,416)

## CERTIFICATE OF SERVICE

In accordance with 37 C.F.R. § 90.2(a)(1) and § 104.2, I hereby certify that on June 12, 2026, in additional to being filed electronically through the Board's P-TACTS System, a true and correct copy of the foregoing PETITIONER'S NOTICE OF APPEAL was served by express overnight mail on the Director of the United States Patent and Trademark office, at the following address:

Director of the United States Patent and Trademark Office
c/o Office of the General Counsel
P.O. Box 1450
Alexandria, Virginia 22313-1450

## CERTIFICATE OF SERVICE

I hereby certify that on June 12, 2026, a true and correct copy of the foregoing PETITIONER'S NOTICE OF APPEAL, along with a copy of the Final Written Decision, was filed electronically with the Clerk's Office of the United States Court of Appeals for the Federal Circuit, at the following address:

United States Court of Appeals for the Federal Circuit
717 Madison Place, N.W., Suite 401
Washington DC 20005

## CERTIFICATE OF SERVICE

I hereby certify that on June 12, 2026, I caused a true and correct copy of the foregoing PETITIONER'S NOTICE OF APPEAL to be served electronically on counsel for Patent Owner at the following addresses:


Kyle W. Kellar, Reg. No. 71,165
Kyle.Kellar@wbd-us.com
WOMBLE BOND DICKINSON (US) LLP
655 N. Central Ave., Suite 2300
Glendale, CA 91203-1445
Telephone: (626) 795-9900
Facsimile: (626) 577-8800

Siho "Scott" Yoo, Reg. No. 78,634
Siho.Yoo@wbd-us.com
WOMBLE BOND DICKINSON (US) LLP
1279 Oakmead Parkway
Sunnyvale, CA 94085
Telephone: (650) 687-8433
Facsimile: (650) 391-1395

John H. Wright, III, Reg. No. 80,505
John.Wright@wbd-us.com
WOMBLE BOND DICKINSON (US) LLP
555 Fayetteville Street, Suite 1100
Raleigh, NC 27601
Telephone: (919) 755-2100
Facsimile: (919) 755-2150


Dated: June 12, 2026

Respectfully submitted,

*/s/ Marc J. Pensabene*


Marc J. Pensabene (Reg. No. 37,416)
O'Melveny & Myers LLP
1301 Avenue of the Americas, 17th Floor
New York, NY 10019
Telephone: (212) 326-2000
Fax: (212) 326-2061
Email: mpensabene@omm.com
Attorney for Petitioner

# FINAL WRITTEN DECISION

Trials@uspto.gov
571-272-7822

Paper 45
Date: April 20, 2026

UNITED STATES PATENT AND TRADEMARK OFFICE

---

BEFORE THE PATENT TRIAL AND APPEAL BOARD

---

THERABODY, INC.,
Petitioner,

v.

HYPERICE IP SUBCO, LLC,
Patent Owner.

---

PGR2024-00053
Patent 11,857,482 B1

---

Before JEFFREY N. FREDMAN, RICHARD H. MARSCHALL, and ALYSSA A. FINAMORE, *Administrative Patent Judges*.

FINAMORE, *Administrative Patent Judge*.

JUDGMENT
Final Written Decision
Determining No Challenged Claims Unpatentable
*35 U.S.C. § 328(a)*

# I. INTRODUCTION

## *A. Background*

Therabody, Inc. ("Petitioner") filed a Petition (Paper 2, "Pet.") whereby Petitioner requests post-grant review of claims 34–38, 40, 41, 43–46, and 58–60 ("the challenged claims") of U.S. Patent No. 11,857,482 B1 ("the '482 Patent") (Ex. 1001). Pet. 1. We issued a Decision (Paper 8) in which we grant institution of post-grant review.

During trial, Hyperice IP Subco, LLC ("Patent Owner") filed a Patent Owner's Response (Paper 27, "PO Resp."). Petitioner filed a Reply (Paper 29, "Pet. Reply"), and Patent Owner filed a Sur-reply (Paper 39, "Sur-reply"). An oral hearing took place February 4, 2026, and we entered the transcript (Paper 44, "Tr.") into the record.

We issue this Final Written Decision pursuant to 35 U.S.C. § 328(a). For the reasons set forth below, we determine Petitioner has not proven, by a preponderance of the evidence, that the challenged claims of the '482 Patent are unpatentable.

## *B. Real Parties in Interest*

Petitioner identifies itself as a real party in interest. Pet. 1. Patent Owner identifies itself and Hyper Ice, Inc. as real parties in interest. Paper 3, 1.

## *C. Related Matters*

Patent Owner has asserted the '482 Patent against Petitioner in *Hyper Ice, Inc. v. Therabody, Inc.*, No. 8:24-cv-00390 (C.D. Cal.) (consolidated into *Hyper Ice, Inc. v. JOICOM Corp.*, No. 8:24-cv-00098). Pet. 1; Paper 3, 1. The parties also identify several other litigations in which the '482 Patent is at issue. Pet. 1–2; Paper 3, 1–2.

We identify PGR2025-00013 between Petitioner and Patent Owner as a related matter. The subject of PGR2025-00013 is U.S. Patent No. 11,938,082 B1, which is a continuation of the ’482 Patent.

*D. The ’482 Patent (Ex. 1001)*

According to the ’482 Patent, the invention relates “to a deep muscle-stimulating device used to increase muscle metabolism, increase the lactic acid cycle and relieve pain.” Ex. 1001, 1:23–25. Figure 1, reproduced below, depicts handheld massaging device 100.

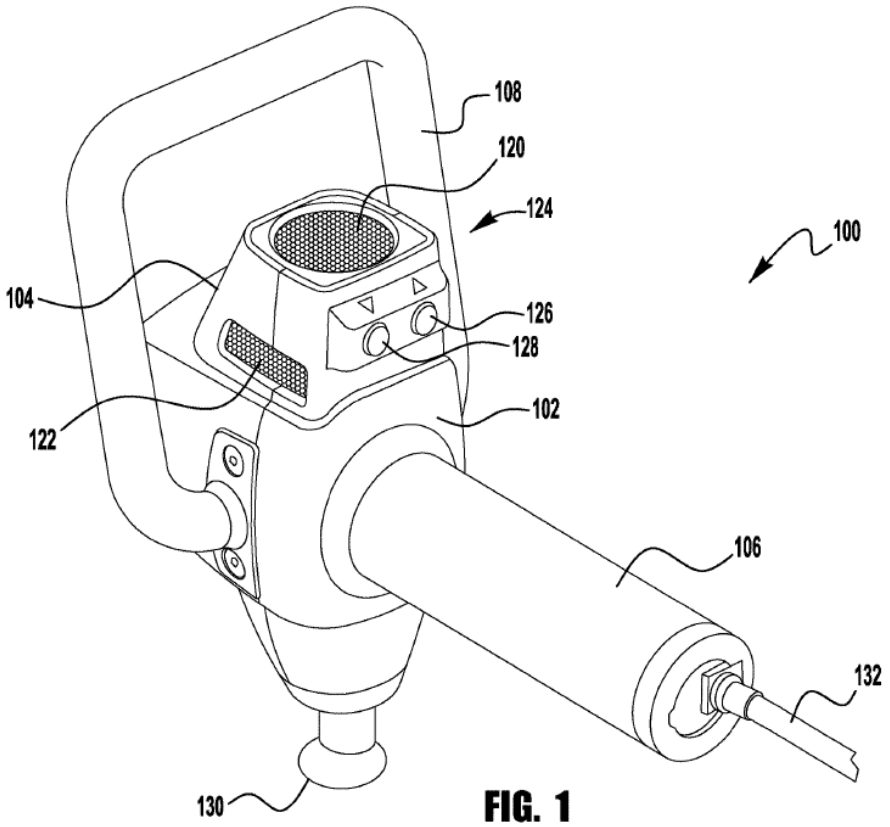


FIG. 1

> F[igure] 1 is a perspective view of an exemplary embodiment of a hand-held massaging device 100. The exemplary massaging device 100 includes a main housing 102 that houses a motor and a drive unit and an upper housing 104 that includes a heat sink and a fan. In addition, massaging device 100 includes a first handle 106, and a second optional

> handle 108. Handle 106 has a longitudinal axis that extends away from the housing 102. The massaging device 100 also includes a massaging head 130. . . . [I]n some embodiments massaging head 130 includes a quick-release connection.

*Id.* at 3:33–44.

The '482 Patent explains:

> When providing a deep tissue massage using a massaging device, such as, for example, massaging device 100, it may be desirable to switch massaging heads to work on different muscles or different portions of muscles during the massage. The exemplary quick-connect system 600 allows a user to quickly switch massaging heads 620. Moreover, the exemplary quick-connect system 600 may be used without turning off the massaging device 100.

Ex. 1001, 6:49–56. Figures 6 and 6A, reproduced below, depict quick-connect system 600.

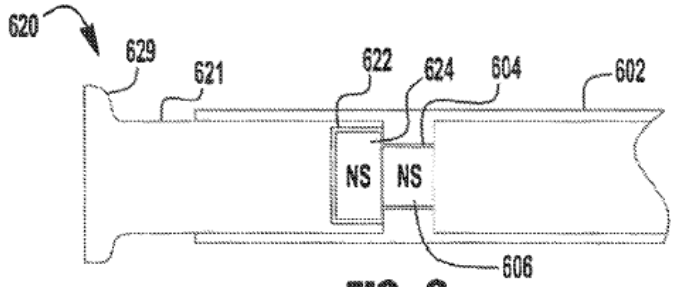


FIG. 6

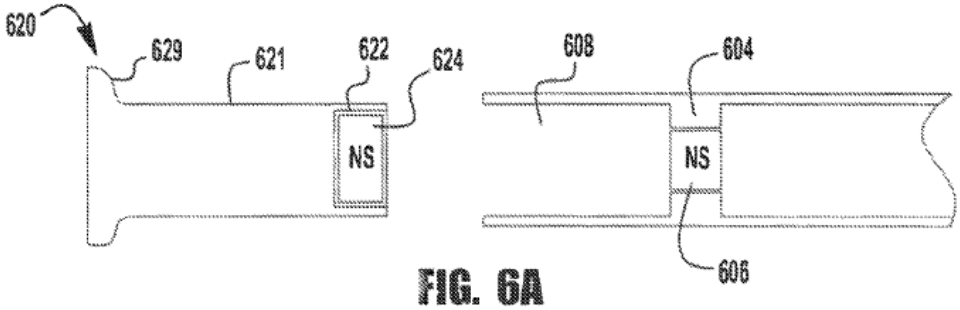


FIG. 6A

"F[igures] 6 and 6A illustrate an exemplary embodiment of a quick-connect system 600 for connecting a massaging head 620 to a piston 602." *Id.* at 6:47–49.

> Quick-connect system 600 includes a piston 602 that has a hollow-end bore 608 for receiving the shaft 621 of a massaging head 620. Located within the bore 608 of piston 602 is a cylindrical seat 604. Cylindrical seat 604 retains a magnet 606. Magnet 606 is illustrated with its north pole located flush with the seat and facing toward the opening in bore 608. Massaging head 620 includes a shaft 621 having a cylindrical pocket 622 at the distal end. Located within the cylindrical pocket 622 is a magnet 624. Magnet 624 is positioned so that its south pole is located at the distal end of shaft 621. Accordingly, when the shaft 621 of massaging head 620 is slid into opening in bore 608, the magnets 606 and 624 are attracted to one another and magnetically hold massaging head 620 firmly in place.

*Id.* at 6:57–7:3. "To remove massaging head 620, a user need only apply a sufficient amount of force to separate the two magnets 606, 624." *Id.* at 7:4–5. According to the '482 Patent, "[t]he strength of the magnets 606, 624 are sized to prevent the massaging head 620 from separating from the piston 602 during normal use, and yet allow a user to quickly remove and replace the massaging head 620." *Id.* at 7:6–9.

*E. Illustrative Claim*

Independent claim 34 is illustrative of the challenged claims and is reproduced below, adding Petitioner's labels for the claim elements and emphasis to the claim element pertinent to the issues before us.

> 34. [pre] A percussive massager comprising:
> [a] a housing;
> [b] a piston in the housing having a proximal end and a distal end;
> [c] a motor at least partially within the housing and operatively connected to the proximal end of the piston, wherein the motor is configured to cause the piston to reciprocate at a first speed;

> [d] a drive mechanism between the motor and the piston that controls a predetermined stroke length of the piston; and
>
> [e] *a quick release connector at the distal end of the piston, wherein the quick release connector is configured to secure a first massaging head while the piston reciprocates a predetermined stroke length at the first speed, wherein the first massaging head has a substantially cylindrical pocket to receive the quick release connector.*

Ex. 1001, 11:64–12:14 (labeling and emphasis added). The remaining challenged claims depend from independent claim 34. *Id.* at 12:15–28, 12:33–38, 12:41–53, 14:1–14.

*F. Asserted Grounds of Unpatentability*

Petitioner asserts the challenged claims are unpatentable on the grounds listed in the table below. Pet. 4–5.

| Claims Challenged | 35 U.S.C. §[1] | Reference(s)/Basis |
|---|---|---|
| 34–38, 40, 41, 43–46, 58–60 | § 112(a) | Written Description |
| 34–38, 40, 41, 43–46, 58–60 | § 112(b) | Indefiniteness |
| 34, 35, 58–60 | § 103 | Mabuchi[2] |
| 36–38, 40, 41, 43–46 | § 103 | Mabuchi, Harris[3] |
| 37, 38 | § 103 | Mabuchi, Harris, Pivaroff[4] |
| 34, 35, 58–60 | § 103 | Pivaroff, Mabuchi |
| 36–38, 40, 41, 43–46 | § 103 | Pivaroff, Mabuchi, Harris |

[1] The Leahy-Smith America Invents Act ("AIA"), Pub. L. No. 112-29, 125 Stat. 284, 285–88 (2011), revised 35 U.S.C. §§ 102 and 103 effective March 16, 2013. Based on Petitioner's uncontested assertion that July 1, 2013 is the earliest possible priority date for the '482 Patent (Pet. 15), we apply the AIA versions of §§ 102 and 103 in this Decision.
[2] Mabuchi, US 4,513,737, issued Apr. 30, 1985 ("Mabuchi") (Ex. 1005).
[3] Harris et al., US 6,432,072 B1, issued Aug. 13, 2002 ("Harris") (Ex. 1006).
[4] Pivaroff, US 6,682,496 B1, issued Jan. 27, 2004 ("Pivaroff") (Ex. 1007).

In support of these asserted grounds, Petitioner submits Declarations by John D. Pratt, Ph.D. (Ex. 1002; Ex. 1033). Patent Owner deposed and cross-examined Dr. Pratt and submits transcripts of Dr. Pratt's depositions (Ex. 2033; Ex. 2034).[5]

In opposition, Patent Owner submits a Declaration of Nathan Morrill (Ex. 2005). Petitioner deposed and cross-examined Mr. Morrill and submits a transcript of Mr. Morrill's deposition (Ex. 1024).

## II. ANALYSIS

Petitioner bears the burden to demonstrate unpatentability by a preponderance of the evidence. *Dynamic Drinkware, LLC v. Nat'l Graphics, Inc.*, 800 F.3d 1375, 1378 (Fed. Cir. 2015). That burden never shifts to Patent Owner, except in limited circumstances not present here. *Id.*

### *A. Level of Ordinary Skill in the Art*

The level of ordinary skill in the art is "a prism or lens" through which we view the prior art and the claimed invention. *Okajima v. Bourdeau*, 261 F.3d 1350, 1355 (Fed. Cir. 2001). The prior art may reflect the level of ordinary skill in the art. *Id.*

Petitioner contends:

> A person of ordinary skill in the art at the relevant time ("POSITA") would have had a bachelor's degree in mechanical engineering, or a related field, and two-to-three years of experience in the research, design, development, or testing of

[5] Consistent with Patent Owner's citations, our citations to Exhibits 2033 and 2034 are to the page numbers of the exhibit, not the native pagination in the deposition transcripts.

> rotating or reciprocating mechanisms, with additional education substituting for experience and vice versa.

Pet. 15 (citing Ex. 1002 ¶ 37). Patent Owner argues:

> A person of ordinary skill in the art ("POSITA") as of the earliest effective filing date of the '482 Patent (July 1, 2013) would have a degree in mechanical engineering and/or industrial design, a working knowledge of consumer product design and human factors, and/or at least three to five years of experience in conceiving, designing, engineering, and/or modifying devices for human use and interaction.

PO Resp 16 (citing Ex. 2005 ¶¶ 63, 65).

The parties' proffered definitions for the level of ordinary skill in the art differ in the details of the experience a POSITA would possess. Petitioner's definition requires experience with rotating or reciprocating mechanisms, whereas Patent Owner's definition requires experience with devices for human use and interaction. These differences, however, do not affect our analysis of the issues in this case. For purposes of this Decision, we adopt Petitioner's definition of level of ordinary skill in the art.

*B. Claim Construction*

In a post-grant review, we interpret a claim "using the same claim construction standard that would be used to construe the claim in a civil action under 35 U.S.C. 282(b)." 37 C.F.R. § 42.200(b) (2025). Under this standard, we construe the claim "in accordance with the ordinary and customary meaning of such claim as understood by one of ordinary skill in the art and the prosecution history pertaining to the patent." *Id.*; *Phillips v. AWH Corp.*, 415 F.3d 1303, 1312–14 (Fed. Cir. 2005) (en banc). Furthermore, we expressly construe the claims only to the extent necessary to determine whether Petitioner has shown that the challenged claims are

unpatentable. *See Nidec Motor Corp. v. Zhongshan Broad Ocean Motor Co.*, 868 F.3d 1013, 1017 (Fed. Cir. 2017) ("[W]e need only construe terms 'that are in controversy, and only to the extent necessary to resolve the controversy.'" (quoting *Vivid Techs., Inc. v. Am. Sci. & Eng'g, Inc.*, 200 F.3d 795, 803 (Fed. Cir. 1999))).

In the Petition, Petitioner declares "Petitioner does not believe that any term requires construction." Pet. 15 (footnote omitted). Patent Owner argues the preambles of the challenged claims are limiting and proposes constructions for the claim terms "percussive massager" and "massaging head." PO Resp. 18–24; Sur-reply 10–17. In reply to Patent Owner's claim construction arguments, Petitioner contends the preambles are not limiting and proposes its own constructions for these claim terms. Pet. Reply 2–9. In its Sur-reply, Patent Owner points to *Revvo Techs., Inc. v. Cerebrum Sensor Techs., Inc.*, IPR2025-00632, Paper 20 (PTAB Nov. 3, 2025) (precedential) and maintains that Petitioner fails to explain why it should be permitted to proceed under a broader construction of claim element 34[e] in this proceeding than its proffered construction for the claim element in the related district court litigation. Sur-reply 20–23.

To ascertain whether Petitioner has shown the challenged claims are unpatentable and resolve the controversy before us, we determine that only claim element 34[e] requires express construction. Claim element 34[e] recites

> a quick release connector at the distal end of the piston, wherein the quick release connector is configured to secure a first massaging head while the piston reciprocates a predetermined stroke length at the first speed, wherein the first massaging head has a substantially cylindrical pocket to receive the quick release connector.

Ex. 1001, 12:8–14.

According to Patent Owner, in this proceeding, Petitioner argues the claim element 34[e] does not require construction, but, in the district court litigation, Petitioner argues the claim element should be construed as:

> The distal end of the piston includes a structure that ***is specifically designed and adapted to quickly and easily secure the first massaging head to the piston*** regardless of rotational alignment while the piston reciprocates a predetermined stroke length at the first speed, ***not merely capable of doing so***.

Sur-reply 20–21 (footnote omitted) (citing Pet. 15; Ex. 2013, 10).

During oral argument, Petitioner confirmed it would not object to the Board adopting the construction that Petitioner proposes in the district court litigation.

> JUDGE MARSCHALL: I think the Petitioner wouldn't object if we adopted the construction that Petitioner proposed in the district court, especially the "designed to" construction, correct?
>
> MR. BERG: No. We wouldn't object to that. And we think that our Petition is on all fours with that construction.

Tr. 81:12–16. As Petitioner does not object to adopting its construction from the district court litigation, we construe claim element 34[e] in accordance with Petitioner's construction from the district court litigation.

*C. Written Description*

Petitioner argues the challenged claims are unpatentable under 35 U.S.C. § 112(a) based on lack of written description support. Pet. 16–25; Pet. Reply 10–13. In particular, Petitioner contends that "[m]ultiple aspects of the configuration recited in Element 34[e] of [c]laim 34 . . . are not disclosed anywhere in the written description and figures." Pet. 16. Patent Owner maintains there is written description support for claim

element 34[e]. PO Resp. 26–37; Sur-reply 1–7. In turn below, we address the parties' arguments for each aspect of claim element 34 that Petitioner contends lacks written description support.

*1. "the first massaging head has a . . . pocket to receive the quick release connector"*

Petitioner asserts that the Specification does not describe a massaging head having a pocket to receive the quick release connector, as recited in claim element 34[e], but instead describes the opposite configuration, namely piston 602 having bore 608 for receiving shaft 621 of massaging head 620. Pet. 18–20 (citing Ex. 1001, 6:57–59, 6:63–65, 6:67–7:3, 7:9–14, Figs. 6, 6A, 6B; Ex. 1002 ¶¶ 79–83); Pet. Reply 10–11 (citing Ex. 1001, 6:57–59; Ex. 1033 ¶¶ 26–28). Although Petitioner acknowledges that the Specification expressly describes pocket 622 in massaging head 620, Petitioner maintains pocket 622 does not receive the quick release connector, which, according to claim element 34[e], is located at the distal end of the piston. Pet. 20 (citing Ex. 1001, 6:67–7:3); *see also* Pet. Reply 11 ("Claim 34(e) requires the 'quick release connector' to be 'at the distal end of the piston.' The pocket in the massaging head must 'receive the quick release connector.' The claim therefore recites a particular connector, located at the piston's distal end, and does not allow the 'receiving' to be fulfilled by some other component, even if that component is another potential quick release connector."). Petitioner additionally argues "pocket 622 does not 'receive' magnet 624 or any part of the quick release connector, as required by [c]laim 34." Pet. Reply 11. According to Petitioner, "[i]n the '482 [S]pecification, 'receive' denotes insertion of the head's shaft into the piston's bore, not a fixed component," and "[a]

POSITA would understand magnet 624 is permanently fixed in pocket 622." *Id.* (citing Ex. 1001, 6:57–59, 7:1, 7:9–14; Ex. 1033 ¶¶ 29–34).

At the outset, we agree with Patent Owner that "[t]he [S]pecification's separate disclosure of the piston 620 having a bore 608 does not invalidate the [S]pecification's disclosure of the massaging head 620 having a pocket 622 to receive the quick release connector." PO Resp. 29. Notably, Petitioner's insistence that the Specification describes bore 608, not pocket 622, as the recited pocket belies its argument that pocket 622 does not receive magnet 624 because magnet 624 is permanently fixed in pocket 622. Petitioner asserts that both magnets 606 and 624 are permanently fixed. Pet. Reply 11 (citing Ex. 1033 ¶¶ 29–34) ("A POSITA would understand magnet 624 is permanently fixed in pocket 622, and magnet 606 is permanently retained in seat 604."). Petitioner cannot persuasively argue that pocket 622 does not receive a quick release connector due to magnet 624 being permanently retained in pocket 622 and that bore 608, which, according to Petitioner, includes magnet 606 permanently retained in seat 604, is the pocket for receiving the quick release connector.

That notwithstanding, we construe claim terms as a POSITA would understand them in light of the Specification. *See, e.g.*, *Phillips*, 415 F.3d 1303, 1315 ("The claims, of course, do not stand alone. Rather, they are part of 'a fully integrated written instrument,' consisting principally of a specification that concludes with the claims. For that reason, claims 'must be read in view of the specification, of which they are a part.' As we stated in *Vitronics*, the specification 'is always highly relevant to the claim construction analysis. Usually, it is dispositive; it is the single best guide to

the meaning of a disputed term.'" (citations omitted)). Petitioner maintains that the Specification describes "receive" as only slidable relationships, but Petitioner ignores the portions of the Specification describing the positioning of magnet 624 within pocket 622. For example, Figure 6 shows magnet 624 positioned within pocket 622. A POSITA would understand that, in addition to slidable relationships, "receive" encompasses the positioning of magnet 624 in pocket 622 shown in Figure 6.

We also agree with Patent Owner that the '482 Patent describes the pocket recited in claim element 34[e]. PO Resp. 26–29 (citing Ex. 1001, 6:57–7:3, Figs. 6, 6A, 6B; Ex. 2005 ¶¶ 84–87); Sur-reply 1–2. According to the Specification:

> Quick-connect system 600 includes a piston 602 that has a hollow-end bore 608 for receiving the shaft 621 of a massaging head 620. Located within the bore 608 of piston 602 is a cylindrical seat 604. Cylindrical seat 604 retains a magnet 606. Magnet 606 is illustrated with its north pole located flush with the seat and facing toward the opening in bore 608. Massaging head 620 includes a shaft 621 having a cylindrical pocket 622 at the distal end. Located within the cylindrical pocket 622 is a magnet 624. Magnet 624 is positioned so that its south pole is located at the distal end of shaft 621. Accordingly, when the shaft 621 of massaging head 620 is slid into opening in bore 608, the magnets 606 and 624 are attracted to one another and magnetically hold massaging head 620 firmly in place.

Ex. 1001, 6:57–7:3.

The Specification expressly describes that quick-connect system 600 includes two magnets: magnet 606 in the distal end of piston 602 and magnet 624 in massaging head 620. The Specification also expressly describes massaging head 620 having pocket 622 with magnet 624. As the Specification describes a quick release connector including a magnet located

at the distal end of the piston and a magnet located within the pocket of the massaging head, the Specification provides written description support for a quick release connector at the distal end of the piston and a massaging head having a pocket to receive the quick release connector.

Moreover, even if we were to agree with Petitioner that claim element 34[e] requires the pocket of the massaging head to receive the quick release connector that is specifically located at the distal end of the piston, Figure 6 of the '482 Patent describes such a pocket. As shown in Figure 6, when massaging head 620 is received within bore 608 located at the distal end of piston 602, pocket 622 and magnet 624 are also located at the distal end of piston 602. As the Figure 6A describes magnet 624 and pocket 622 located at the distal end of piston 602, the Specification further provides written description support for a massaging head having a pocket to receive the quick release connector specifically located at the distal end of the piston.

For these reasons, Petitioner has not shown that the Specification fails to describe the aspect of claim element 34[e] reciting "the first massaging head has a . . . pocket to receive the quick release connector." Petitioner has not persuaded us that this aspect of claim element 34[e] lacks written description support.

*2. "substantially cylindrical pocket to receive the quick release connector"*

Petitioner asserts "[t]he '482 Patent does not explicitly describe the shape of the pocket (bore 608)." Pet. 21. Petitioner also asserts "this cylindrical pocket 622 does not 'receive the quick[]release connector,' which the claim recites as located 'at the distal end ***of the piston***." *Id.* at 22.

These assertions stem from Petitioner's contention that there is no written description support for the aspect of claim element 34[e] reciting "the first massaging head has a . . . pocket to receive the quick release connector," which we do not find persuasive for the reasons set forth in section II.C.1. We find the related assertions unpersuasive for the same reasons.

Additionally, Petitioner asserts "the 'cylindrical pocket 622' is described only as being 'cylindrical.'" Pet. 22–21 (citing Ex. 1001, 6:64–65). Petitioner further asserts "in the context of the [S]pecification, the claims, and the prosecution history, a POSITA would understand that the pocket is cylindrical (not "***substantially*** cylindrical") so as to receive the connector 'while the piston reciprocates,' ***without the need for alignment***." *Id.* at 21 (citing Ex. 1002 ¶¶ 85–87); *see also* Pet. Reply 12 ("That premise requires a pocket geometry precise enough to retain the magnet under misalignment and reciprocating loads; a mismatched pocket-magnet interface would not." (citing Ex. 1033 ¶¶ 35–36)).

Patent Owner argues: "Claim 34's recitation of a 'substantially cylindrical pocket' merely allows for minor variations in a cylindrical shape while still performing its intended function of receiving the quick release connector and need not be mathematically defined. In practice, this variance is called cylindricity or runout." PO Resp. 32 (citing Ex. 2005 ¶ 89; Ex. 2017). Patent Owner also argues "[a]t his deposition, Dr. Pratt explained that cylindrical parts are commonly designed with a tolerance allowing for some variance in their overall cylindrical shape while still fitting together or performing their required function." *Id.* (citing Ex. 2033,

25:3–26:21); *see also* Sur-reply 5 ("Dr. Pratt confirmed that tolerancing cylindrical parts is within the skill in the art." (citing Ex. 2033, 25:13–20)[6]).

Petitioner retorts that Patent Owner's reliance on Dr. Pratt's testimony is misplaced. Pet. Reply 12. Specifically, Petitioner asserts:

> He did not testify that all cylindrical parts commonly allow shape variance. Rather, he said only that there "may be" tolerances on cylindrical parts in developing fasteners. The existence of tolerances in some contexts does not show that variance is acceptable here, where any misfit risks detachment during piston reciprocation.

*Id.* (citations omitted) (citing Ex 1033 ¶ 37).

Although we appreciate Dr. Pratt's acknowledgement of tolerances is not categorical, there is no evidence that avoiding detachment during piston reciprocation requires a perfect fit. Furthermore, Dr. Pratt admits that runout is a known variance.

> Q. When you developed fasteners for your previous employers, was a relevant concern how cylindrical the fastener needed to be?
> A. In some cases it was important, yes.
> Q. And would you assign the fastener a certain cylindrical tolerance in designing the fastener?
> A. We would specify in terms of, for example, run out. There would be a diametrical tolerance. For example, on a precision bolt, say, .375 plus or minus .0001, ten thousands of an inch.

[6] Patent Owner cites to Exhibit 2033, 24:13–20 for the portion of Dr. Pratt's deposition transcript reproduced on page 5 of the Sur-reply. However, the reproduced portion appears on page 25 of the exhibit, not page 24. Thus, we understand that Patent Owner's citation to Exhibit 2033, 24:13–20 includes a typographical error in the page number and that Patent Owner intends to cite to Exhibit 2033, 25:13–20.

> Q. That's essentially a tolerance that allows the fastener in this case to still perform its function without being perfectly cylindrical; correct?
> A. Correct.

Ex. 2033, 25:3–17.

In view of the evidence of record, a POSITA would understand the Specification's description of pocket 622 as "cylindrical" includes the variances known in the art that would allow pocket 22 to function properly. Petitioner has not persuaded us that the "substantially cylindrical pocket to receive the quick release connector" recited in claim element 34[e] lacks written description support.

*3. "quick release connector . . . configured to secure a first massaging head while the piston reciprocates a predetermined stroke length at the first speed"*

Petitioner asserts:

> Claim 34 purports to broadly claim ***any*** species of connector that is a "quick release connector . . . configured to secure a first massaging head while the piston reciprocates a predetermined stroke length at the first speed." But at most, the '482 Patent discloses only a single working example: the "quick-connect system" with corresponding magnets in the shaft of a massaging head and within the bore of the piston.

Pet. 24 (alteration in original) (citing Ex. 1001, 6:47–7:19). According to Petitioner:

> The narrow disclosure of a single purported "quick connect system," using magnets of certain sizes and strengths to secure and remove the massaging head, fails to provide sufficient written description to support the challenged claims' broad functional language claiming ***any*** "quick release connector" that "is configured to secure a first massaging head while the piston reciprocates a predetermined stroke length at the first speed."

*Id.* at 25.

Referencing Dr. Pratt's testimony, Petitioner argues: "[T]here are a wide range of connectors known in the art that, depending on the context and specific application of the connector, could be argued to be 'quick release connectors.' Most having nothing to do with magnets." Pet. 25 (citing Ex. 1002 ¶¶ 53–58). Petitioner further asserts: "Claim 34 requires the quick[]release connector operate to secure the massage head while the piston reciprocates, which [Patent Owner] asserts indicates that no alignment is needed. But many of Dr. Pratt's examples require alignment and would not satisfy the claim as [Patent Owner] understands it." Pet. Reply 12–13 (citing Ex 1033 ¶¶ 38–41).

Patent Owner argues that "Petitioner exclusively relies on case law and PTAB decisions addressing the written description requirements in the context of the pharmaceutical arts, but the '482 Patent is in the mechanical arts" and that "[t]his distinction is critical because 'the level of detail required to satisfy the written description requirement varies depending on the nature and scope of the claims and on the complexity and predictability of the relevant technology.'" PO Resp. 34 (quoting *Ariad Pharms., Inc. v. Eli Lilly & Co.*, 598 F. 3d 1336, 1351 (Fed. Cir. 2010)). Patent Owner also argues "[d]isclosure of one example embodiment of the recited 'quick release connector' is not *per se* deficient as Petitioner suggests." *Id.* at 35. We agree with Patent Owner.

The invention, a reciprocating massage device, is in a predictable field, namely the electro-mechanical arts. Also, there is no evidence that the recited quick release connector is complex, even considering Patent Owner's alleged understanding of it. Rather, Dr. Pratt testifies that a POSITA would

be able to recognize a quick release connector for a particular application. According to Dr. Pratt,

> A person of ordinary skill in the art would consider a number of factors, depending on the context and specific application of the connector, to determine whether a connector provides a "quick release." Such factors could include whether the connector is designed to manually and easily connect and disconnect two objects, and whether tools are necessary to do so. Other factors to be considered may be based on the specific application or operating environment.

Ex. 1002 ¶ 58. Given the predictability of the electro-mechanical arts and lack of complexity of the recited quick release connector, a low level of detail is required to satisfy the written description requirement. *See RAI Strategic Holdings, Inc. v. Philip Morris Prods. S.A.*, 92 F.4th 1085, 1090 (Fed. Cir. 2024) ("Given the predictability of electro-mechanical inventions such as the one at issue here, and the lack of complexity of the particular claim limitation at issue—*i.e.*, reciting the length of a heating member—'a lower level of detail is required to satisfy the written description requirement than for unpredictable arts.'" (quoting *Hologic, Inc. v. Smith & Nephew, Inc.*, 884 F.3d 1357, 1361 (Fed. Cir. 2018)). In view of the low level of detail required to satisfy the written description requirement, Petitioner has not persuaded us that the Specification's example of a quick release connector configured to secure the massaging head as the piston reciprocates fails to provide sufficient written description support for the "quick release connector . . . configured to secure a first massaging head while the piston reciprocates a predetermined stroke length at the first speed" recited in claim element 34[e].

*4. Conclusion for Written Description*

For the reasons set forth above in sections II.C.1–3, Petitioner has not persuaded us that any aspect of claim element 34[e] lacks written description support. Petitioner has not proven, by a preponderance of the evidence, that independent claim 34, as well as any of claims 35–38, 40, 41, 43–46, and 58–60 depending therefrom, are unpatentable under 35 U.S.C. § 112(a).

*D. Indefiniteness*

Petitioner argues that the challenged claims are unpatentable under 35 U.S.C. § 112(b) as indefinite because independent claim 34 recites a "substantially cylindrical" pocket. Pet. 26–27; Pet. Reply 13–14. Patent Owner argues the challenged claims inform, with reasonable certainty, those skilled in the art about the scope of the claimed invention. PO Resp. 37–40; Sur-reply 8–9. We address the parties' arguments regarding the claim term "substantially cylindrical" below.

Petitioner asserts the '482 Patent provides no standard for ascertaining whether a pocket is "substantially cylindrical." Pet. 26. According to Petitioner,

> Presumably, there is some difference, as the [S]pecification describes both the seat 604 in the bore 608 of the piston and the pocket 622 in the shaft 621 of the massaging head as "cylindrical," but [c]laim 34 recites a pocket that is ***substantially*** cylindrical. Yet there is no guidance in the claims, the [S]pecification, or the file history that would allow a POSITA to determine the difference between the two, or to determine what amount of deviation from a perfect cylinder is still "substantially cylindrical."

*Id.* at 26–27 (citations omitted) (citing Ex. 1002 ¶ 96). Petitioner further asserts: "Here, the pocket's purpose is to provide a secure attachment during reciprocation, and during prosecution, the Applicant emphasized that no

alignment is required to distinguish the prior art. In this context, the claims must inform a POSITA, with reasonable certainty, of the exact shape that achieves a secure attachment." Pet. Reply 13.

Patent Owner argues "a person of ordinary skill in the art would know when the pocket in a massaging head is substantially cylindrical enough – *i.e.*, sufficiently cylindrical – to accomplish the function identified in the patent: receiving the quick release connector." PO Resp. 39 (footnote omitted). According to Patent Owner: "[S]ubstantially cylindrical" is not indefinite because the intrinsic record provides a POSITA a standard for determining when the pocket is substantially cylindrical, *i.e.*, sufficiently cylindrical to achieve its identified function of receiving the quick release connector." Sur-reply 8 (alteration in original). We agree with Patent Owner.

Contrary to Petitioner's assertion, the Specification provides guidance as to what amount of deviation from a perfect cylinder is still "substantially cylindrical." The Specification describes that quick-connect system 600 includes two magnets with opposite poles facing each other: magnet 606 in the distal end of piston 602 and magnet 624 located in cylindrical pocket 622 of massaging head 620. Ex. 1001, 6:57–67, Figs. 6, 6A. The Specification further describes that "when the shaft 621 of massaging head 620 is slid into opening in bore 608, the magnets 606 and 624 are attracted to one another and magnetically hold massaging head 620 firmly in place." *Id.* at 6:67–7:3. In view of the description of quick-connect system 600, the Specification sets forth a standard for ascertaining whether the pocket is "substantially cylindrical." To wit, the pocket is "substantially cylindrical" when the

pocket receives a magnet therein so that the magnets can magnetically hold the massaging head firmly in place.

Furthermore, Dr. Pratt testifies that "[m]agnetic connectors comprise a magnet on at least one of the two objects to be joined. These types of connectors are ubiquitous even today for driving threaded fasteners." Ex. 1002 ¶ 55. Dr. Pratt also testifies that a POSITA would understand how to take into account certain variances, like runout. Ex. 2033, 25:3–17. Dr. Pratt's testimony shows that magnetic connectors are well known and that a POSITA would be able to determine whether the pocket was "substantially cylindrical" for a secure connection of the massaging head.

In view of the foregoing, Petitioner has not persuaded us that the claim term "substantially cylindrical" recited in independent claim 34 fails to inform, with reasonable certainty, the shape of the pocket. Petitioner has not proven, by a preponderance of the evidence, that independent claim 34, as well as claims 35–38, 40, 41, 43–46, and 58–60 depending therefrom, are unpatentable under 35 U.S.C. § 112(b) as indefinite.

*E. Obviousness*

Petitioner asserts the challenged claims are unpatentable under 35 U.S.C. § 103 as obvious. Pet. 33–73; Pet. Reply 14–28. Specifically, Petitioner asserts claims 34, 35, and 58–60 are obvious over Mabuchi (Pet. 33–46; Pet. Reply 14–21), claims 36–38, 40, and 43–46 are obvious over Mabuchi and Harris (Pet. 46–52; Pet. Reply 21–22), claims 37 and 38 are obvious over Mabuchi, Harris, and Pivaroff (Pet. 53–56; Pet. Reply 23–25), claims 34, 35, and 58–60 are obvious over Pivaroff and Mabuchi (Pet. 56–68; Pet. Reply 25–28), and claims 36–38, 40, 41, and 43–46 are obvious over Pivaroff, Mabuchi, and Harris (Pet. 68–73; Pet.

Reply 28). Patent Owner argues that Petitioner fails to show the challenged claims are obvious. PO Resp. 41–89; Sur-reply 18–34.

All of Petitioner's asserted obviousness grounds rely on Mabuchi to disclose claim element 34[e]. Pet. 33–73; Pet. Reply 14–28. Thus, a dispositive issue for Petitioner's asserted obviousness grounds is whether Petitioner has shown that Mabuchi discloses this claim element. Our analysis of this issue begins with an overview of Mabuchi. We then turn to the parties' arguments regarding Mabuchi's disclosure of claim element 34[e].

*1. Mabuchi (Ex. 1005)*

Mabuchi is a United States patent that discloses a "a beauty treatment device having a space guide that permits an actuator to repeatedly reciprocate and controls the motion of the actuator wherein a patter repeatedly pats a skin surface being treated at a given rate." Ex. 1005, 1:8–12. Figure 1, reproduced below, shows the beauty treatment device.

FIG. 1

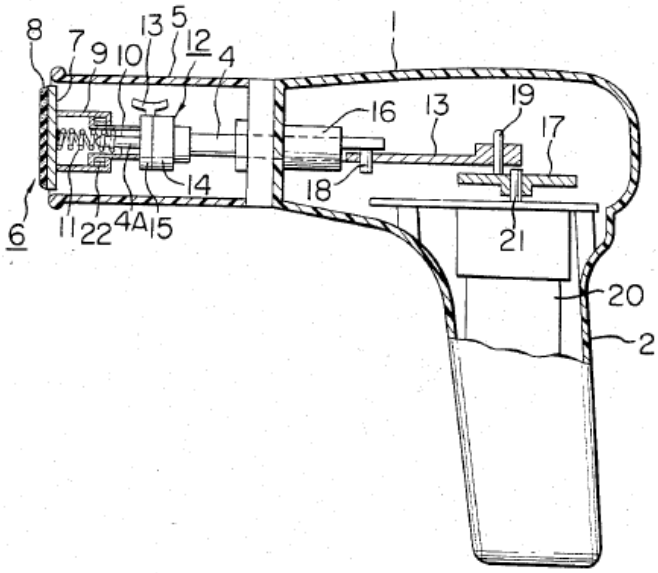

Figure 1 is a partially sectional side elevation of a beauty treatment device.

*Id.* at 1:56–57.

> A beauty treatment device of this invention has a handle 2 fitted to a device body to form the entire device into a pistol shape, as shown in F[igure] 1 illustrating an embodiment of this invention. In the handle 2, housed is a motor 20 which causes a motor output shaft 21 to rotate via a reduction gear (not shown) fitted thereto as necessary. A rotating disc 17 is fixed to the motor output shaft 21, which in turn causes the rotating disc 17 to rotate. A rod 3 is fitted at an end thereof to a crankshaft 19 provided on the rotating disc 17, the other end thereof being connected to an actuator 4 via a rod shaft 18. Consequently, as the rotating disc 17 rotates, the actuator 4 is caused to reciprocate within an actuator bearing 16 via the rod 3.
>
> In this Specification, a patter, or patter assembly 6 comprises a plate member 7, a cushion member 8, a patter body 9, a patter slide tube 10 etc. The patter, or patter assembly 6 is connected to the actuator 4 by means of a patter connecting mechanism 12 . . . . More specifically, as the actuator 4 is connected to the patter slide tube 10 via the patter connecting mechanism 12, the reciprocating motion of the actuator 4 is transmitted directly to the patter slide tube 10. The patter slide tube 10 is slidably fitted to the patter body 9. Inside the patter body 9, disposed is a resilient member 11, which depresses the plate member 7 fitted to the patter body 9 and an end face of an actuator head supporting tube 26 press-fitted into the patter slide tube 10 . . . . Consequently, the reciprocating motion of the patter slide tube 10 is also directly transmitted to the patter body 9 by resiliency of the resilient member 11. A cushion member 8 fitted to the plate member 7 hits the skin surface at the front surface thereof, giving an impact to the skin surface.

*Id*. at 2:40–3:5. According to Mabuchi:

> [An] object of this invention to provide beauty treatment device having such a construction a space guide is provided to maintain a distance between a device body and the skin surface being patted, both a plate member and a cushion member comprising a

> patter assembly fitted to an actuator are adapted protrude slightly from the end face of the space guide.

*Id.* at 1:35–42.

Mabuchi also discloses that an "object of this invention to provide a beauty treatment device having patters of different shapes which are interchangeably used in accordance with the skin portions being treated." Ex. 1005, 1:47–50. Figure 18, reproduced below, is a cross-sectional view of a particular patter connecting mechanism. *Id.* at 2:25–26.

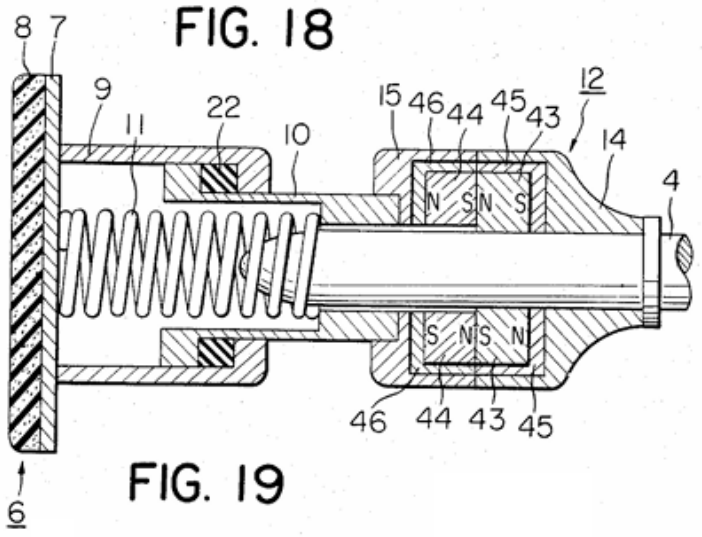


Figure 18 show a patter connecting mechanism including magnets 43 and 44. *Id.* at 7:67–8:2. According to Mabuchi:

> This connecting mechanism 12 utilizing the different pola[r]ities of the magnets 43 and 44 ensures positive connection of the actuator 4 and the patter assembly 6, both of which are subjected to vibrations caused by high-speed reciprocating motion. In addition, positive connection can be ensured without positioning the actuator 4 and the patter assembly 6.
>
> The changing of the patter assembly 6 can be easily accomplished since the actuator 4 and the patter assembly 6 are automatically disconnected merely by turning each other.

*Id.* at 8:33–43.

*2. Claim Element 34[e]*

Petitioner relies on Mabuchi's patter connecting mechanism shown in Figures 18 and 19 to disclose the quick release connector recited in claim element 34[e]. Pet. 37–42; Pet. Reply 17–21. Petitioner asserts that "the 'patter connecting mechanism' in Mabuchi's Figures 18 and 19 . . . includes magnet 43 implanted in the coupling 14 and the protruding actuator head, all located at the distal end of actuator 4" and that "[t]hese elements form a quick release connector." Pet. 37 (citing Ex. 1005, 7:67–8:10, 8:40–43); *see also* Pet. Reply 17–18 (arguing Mabuchi discloses easy interchange of the patter assembly). Petitioner also asserts a POSITA would understand from Mabuchi's disclosures that the patter connecting mechanism is configured to secure the massaging head as the piston reciprocates the predetermined stroke length at a first speed. Pet. 39 (citing Ex. 1002 ¶¶ 110–113). Specifically, Petitioner asserts Mabuchi discloses that

> the purpose of the patter connecting mechanism is to allow for "changing the shape or patting intensity of the patter assembly 6 . . . in accordance with the portion being treated or the purpose of treatment," and thus patter assembly 6 must be "interchangeable" while also "securely connected to the actuator 4 to prevent unwanted disengagement,"

(*id.* (alteration in original) (citing Ex. 1005, 5:52–64)), that "[t]he patter connecting mechanism of Figures 18 and 19 utilizes the "attracting force caused by different polarities on the two magnets 43 and 44 (*id.* (citing Ex. 1005, 8:11–15)), that "the device can be operated before the patter assembly 6 is connected" (*id.* (citing Ex. 1005, 8:15–18)), and that "magnet 43 in coupling 14 and magnet 44 inside flange 15 'ensures positive connection of the actuator 4 and the patter assembly 6, both of which are

subjected to vibrations caused by high-speed reciprocating motion (*id.* (citing Ex. 1005, 8:33–37)). Petitioner further asserts a POSITA would understand Mabuchi's patter connecting mechanism is configured to secure the patter assembly to the actuator as the actuator reciprocates because Mabuchi discloses that "using this patter connecting mechanism, a 'positive connection can be ensured ***without positioning*** the actuator 4 and the patter assembly 6.'" *Id.* at 39–40 (citing Ex. 1002 ¶ 113; Ex. 1005, 8:33–39). Additionally, Petitioner asserts "to the extent Patent Owner contends that the '482 Patent's disclosure of cylindrical pocket 622 holding magnet 624 at the distal end of shaft 621 is a 'substantially cylindrical pocket to receive the quick release connector,' . . . Mabuchi similarly discloses a pocket (yoke core 46) holding magnet 44 in flange 15 of the patter assembly 6." *Id.* at 41–42 (citing Ex. 1002 ¶ 118; Ex. 1005, Figs. 6, 18).

Patent Owner contends Mabuchi's patter assembly 6 cannot be secured while actuator 4 reciprocates due to space guide 5. PO Resp. 53–54. Patent Owner argues:

> Petitioner fails to consider that replacing the patter assembly 6 would require removing the space guide 5 so that the patter assembly 6 could be inserted into or removed from the actuator 4 while it reciprocates. Indeed, attempting to insert or remove the patter assembly 6 without removing the space guide 5 while the actuator 4 reciprocates would cause the user's finger(s) to be pinched between the plate member 7 of the patter assembly 6 and the end of the space guide 5, preventing the patter assembly 6 from being secured to or removed from the piston 4.

*Id.* at 54 (citing Ex. 2005 ¶ 105). Patent Owner further argues "the space guide 5 would preclude the user from clearly seeing the actuator 4 and the patter assembly 6 as they approach each other, frustrating or preventing the

user from successfully connecting the patter assembly 6 and the actuator 4." *Id.* (citing Ex. 2005 ¶ 105).

Patent Owner also contends Mabuchi does not disclose that the device is operated before patter assembly 6 is connected. PO Resp. 55. According to Patent Owner:

> Petitioner relies on Mabuchi's statement that "In this state, or ***in the state where the actuator 4 is connected*** to the patter assembly 6, the patter assembly 6 is operated . . . ." to support its allegation that "Mabuchi notes that the device can be operated before the patter assembly 6 is connected." Pet., p.39 (quoting Ex. 1005, 8:15–18 (***emphasis*** in original)). But this passage simply references the preceding sentence in Mabuchi, which explains how, in Figure 18, the magnets 43 and 44 in the coupling 14 and the flange 15 are attracted to connect the actuator 4 and the patter assembly 6.

*Id.* at 55 (alteration in original) (citing Ex. 1005, 8:11–15; Ex. 2005 ¶¶ 106–107).

Patent Owner additionally contends:

> If Petitioner's narrower construction is considered, Petitioner never explains how (or even if) Mabuchi's magnetic connection system "is <u>*specifically designed and adapted to*</u> quickly and easily secure the first massaging head to the piston regardless of rotational alignment while the piston reciprocates a predetermined stroke length at the first speed." Rather, Petitioner appears to rely on the "mere[] capab[ility] of" a user securing the patter assembly to the actuator while the actuator reciprocates, contrary to its narrower construction.

Sur-reply 22 (alternations in original). Per Patent Owner, "if Mabuchi was 'specially designed and adapted' for connection during reciprocation, it would be expected to describe as much, but Dr. Pratt agrees that Mabuchi has no such disclosure." *Id.* at 22–23 (citing Ex. 2034, 69:24–7:14).

As set forth above in section II.B, we adopt Petitioner's narrower construction from the related district court litigation. Thus, we construe claim element 34[e] as "the distal end of the piston includes a structure that is specifically designed and adapted to quickly and easily secure the first massaging head to the piston regardless of rotational alignment while the piston reciprocates a predetermined stroke length at the first speed, not merely capable of doing so."

We agree with Patent Owner that Mabuchi does not explicitly disclose any structure that is specifically designed and adapted to quickly and easily secure the massaging head to the piston as the piston reciprocates. Even Dr. Pratt acknowledges Mabuchi does not expressly disclose changing the patter assembly while the piston reciprocates.

> Q. Do you agree that Mabuchi does not expressly describe the patter assembly being changed while the piston reciprocates -- sorry -- while the actuator reciprocates?
>
> A. Yeah. Mabuchi does not describe attachment or removal of the massage head while it reciprocates.

Ex. 2034, 69:24–70:4.

Mabuchi discloses that "positive connection can be ensured without positioning the actuator 4 and the patter assembly 6" (Ex. 1005, 8:37–39) and that "[t]he changing of the patter assembly 6 can be easily accomplished" (*id.* at 8:40–43). Mabuchi also discloses that "the patter assembly 6 requires [sic] to be interchangeable." *Id.* at 5:61–62. These disclosures, however, are silent as to changing the patter assembly <u>*while*</u> the piston reciprocates. Mabuchi also discloses "[t]his connecting mechanism 12 utilizing the different pola[r]ities of the magnets 43 and 44 ensures positive connection of the actuator 4 and the patter assembly 6, both of which are subjected to vibrations caused by high-speed reciprocating

motion." *Id.* at 8:33–37. Although this disclosure references "high-speed reciprocating motion," it does with respect to ensuring a connection between patter assembly 6 and actuator 4, not the process of making a connection between them.

We also agree with Patent Owner that Mabuchi does not disclose operating the device before patter assembly 6 is connected, as Petitioner asserts. Mabuchi discloses:

> As shown in F[igure] 18, the magnet 43 implanted in the coupling 14 and the magnet 44 implanted in the flange 15 are connected to each other by attracting force caused by different polarities on the two magnets 43 and 44. In this state, or in the state where the actuator 4 is connected to the patter assembly 6, the patter assembly 6 is operated, as described referring to F[igures] 1 through 5.

Ex. 1005, 8:11–18. Petitioner ostensibly maintains that the reference to "this state" in this disclosure regards a state where patter assembly 6 is not connected to actuator 4. Although the disclosure draws a distinction between "this state" and "the state where the actuator 4 is connected to the patter assembly 6," the distinction is not between actuator 4 being connected or not connected to patter assembly 6. Rather, in light of the disclosure's reference to the magnetic connection, a POSITA would understand that the distinction regards the type of connection between actuator 4 and patter assembly 6, namely the magnetic connection shown in Figure 18 and the non-magnetic connection shown in Figures 1 through 5.

Similar to quick-connect system 600 described in the Specification of the '482 Patent, Mabuchi discloses a patter connecting mechanism including two magnets. Ex. 1005, 2:25–29, 7:67–8:2, Figs. 18, 19. However, unlike the massaging device described in the Specification, Mabuchi's beauty

treatment device includes space guide 5. *Id.* at Figs. 1–7. Mabuchi discloses that the space guide ensures the patter assembly protrudes only slightly from the end face of the space guide. *Id.* at 1:35–42. According to Mabuchi, Figure 4 shows the furthest patter assembly 6 protrudes from the open end face of space guide 5. *Id.* at 4:18–25. Even assuming space guide 5 would provide enough space for the user to secure patter assembly 6 to actuator 4 as the actuator reciprocates, we agree with Patent Owner that securing patter assembly 6 while actuator 4 reciprocates would reasonably be expected to pinch the user's fingers between patter assembly 6 and space guide 5. The presence of space guide 5, therefore, undermines Petitioner's assertion that Mabuchi's assembly includes a structure that is specifically designed and adapted to quickly and easily secure the first massaging head to the piston while the piston reciprocates.

Petitioner retorts that "managing finger clearance is a routine, predictable design choice (e.g., adding a small guard lip, extending the flange beyond the guide, providing fingers tabs, using a soft face, or specifying hand positions)." Pet. Reply 19 (citing Ex. 1033 ¶ 64). Petitioner, however, in its asserted obviousness grounds, is not proposing to modify Mabuchi's device to change the finger clearance. *See* Tr. 26:8–12 ("JUDGE FINAMORE: Do you propose that in your Petition, to modify the patter head assembly? MR. BERG: You know, we don't think that there's a modification – I mean, we think that it's – would be obvious to a person of skill in the art. We don't think that there's a particular modification.").

In view of the foregoing, such as Mabuchi's silence as to securing the patter assembly while the actuator reciprocates and the space guide jeopardizing the securement of the patter assembly during reciprocation, we

are not persuaded that Mabuchi discloses "the distal end of the piston includes a structure that is specifically designed and adapted to quickly and easily secure the first massaging head to the piston regardless of rotational alignment while the piston reciprocates a predetermined stroke length at the first speed, not merely capable of doing so," as claim element 34[e] requires under Petitioner's construction from the district court ligation, which we adopt for this Decision. Petitioner has not persuaded us that Mabuchi discloses claim element 34[e].

*3. Conclusion for Obviousness*

As Petitioner has not persuaded us that Mabuchi discloses claim element 34[e], Petitioner has not demonstrated that the challenged claims are unpatentable under 35 U.S.C. § 103 pursuant to its asserted obviousness grounds, which all rely on Mabuchi to disclose claim element 34[e]. Petitioner has not proven, by a preponderance of the evidence, that any of claims 34, 35, and 58–60 are obvious over Mabuchi, claims 36–38, 40, and 43–46 are obvious over Mabuchi and Harris, claims 37 and 38 are obvious Mabuchi, Harris, and Pivaroff, claims 34, 35, and 58–60 are obvious over Pivaroff and Mabuchi, or claims 36–38, 40, 41, and 43–46 are obvious over Pivaroff, Mabuchi, and Harris.

## III. CONCLUSION

| Claims Challenged | 35 U.S.C. § | Reference(s)/Basis | Claims Shown Unpatentable | Claims Not Shown Unpatentable |
|---|---|---|---|---|
| 34–38, 40, 41, 43–46, 58–60 | 112(a) | Written Description | | 34–38, 40, 41, 43–46, 58–60 |
| 34–38, 40, 41, 43–46, 58–60 | 112(b) | Indefiniteness | | 34–38, 40, 41, 43–46, 58–60 |
| 34, 35, 58–60 | 103 | Mabuchi | | 34, 35, 58–60 |
| 36–38, 40, 41, 43–46 | 103 | Mabuchi, Harris | | 36–38, 40, 41, 43–46 |
| 37, 38 | 103 | Mabuchi, Harris, Pivaroff | | 37, 38 |
| 34, 35, 58–60 | 103 | Pivaroff, Mabuchi | | 34, 35, 58–60 |
| 36–38, 40, 41, 43–46 | 103 | Pivaroff, Mabuchi, Harris | | 36–38, 40, 41, 43–46 |
| **Overall Outcome** | | | | 34–38, 40, 41, 43–46, 58–60 |

## IV. ORDER

In consideration of the foregoing, it is hereby:

ORDERED that Petitioner has not proven, by a preponderance of the evidence, that any of claims 34–38, 40, 41, 43–46, and 58–60 of the ’482 Patent are unpatentable; and

FURTHER ORDERED that, as this is a Final Written Decision, a party seeking judicial review of the Decision must comply with the notice and service requirements of 37 C.F.R. § 90.2.

FOR PETITIONER:

Marc Pensabene
Cameron Westin
William Fink
O'MELVENY & MYERS LLP
mpensabene@omm.com
cwestin@omm.com
tfink@omm.com

FOR PATENT OWNER:

Kyle Kellar
Siho Yoo
John Wright
WOMBLE BOND DICKINSON (US) LLP
kyle.kellar@wbd-us.com
syoo@lewisroca.com
john.wright@wbd-us.com