This international standard was developed in accordance with internationally recognized principles on standardization established in the Decision on Principles for the Development of International Standards, Guides and Recommendations issued by the World Trade Organization Technical Barriers to Trade (TBT) Committee.

Designation: F1918 – 21

Standard Safety Performance Specification for Soft Contained Play Equipment[1]

This standard is issued under the fixed designation F1918; the number immediately following the designation indicates the year of original adoption or, in the case of revision, the year of last revision. A number in parentheses indicates the year of last reapproval. A superscript epsilon (ε) indicates an editorial change since the last revision or reapproval.

1. Scope

1.1 This safety performance specification provides safety and performance standards for soft contained play equipment. Its purpose is to reduce the potential for life-threatening and debilitating injuries.

1.2 The range of users encompassed by this safety performance specification is the 5th percentile 2 year old to the 95th percentile 12 year old.

1.3 Public playground equipment, home playground equipment, sports equipment, amusement rides, fitness equipment not part of the play system, water-related attractions and devices, and toys and juvenile products are not included in this specification.

1.4 This specification does not address accessibility, except as it pertains to safety issues not covered in The Americans With Disabilities Act Accessibility Guidelines (ADAAG).[2]

1.5 This safety performance specification includes the following sections:

Title	Section Number
Scope	1
Referenced Documents	2
Terminology	3
General Requirements	4
Materials and Manufacture	5
Performance Requirements	6
Requirements for Access/Egress	7
Equipment	8
Areas Outside Equipment	9
Structural Integrity	10
Maintenance	11
Fire Safety	12
Evacuation	13
Figures	Annex A1

1.6 *This international standard was developed in accordance with internationally recognized principles on standardization established in the Decision on Principles for the Development of International Standards, Guides and Recommendations issued by the World Trade Organization Technical Barriers to Trade (TBT) Committee.*

2. Referenced Documents

2.1 *ASTM Standards:*[3]

E648 Test Method for Critical Radiant Flux of Floor-Covering Systems Using a Radiant Heat Energy Source

F1077 Guide for Selection of Committee F16 Fastener Specifications (Withdrawn 2014)[4]

F1292 Specification for Impact Attenuation of Surfacing Materials Within the Use Zone of Playground Equipment

F1487 Consumer Safety Performance Specification for Playground Equipment for Public Use

2.2 *Federal Standards:*[5]

16 CFR Part 1303 Ban of Lead-Containing Paint and Certain Consumer Products Bearing Lead-Containing Paint

16 CFR 1500 Hazardous Substances Act Regulations, including Sections:

1500.48 Technical Requirements for determining a Sharp Point in Toys and other Articles Intended for Use by Children Under 8 Years of Age.

1500.49 Technical Requirements for Determining a Sharp Metal or Glass Edge in Toys and Other Articles Intended for Use by Children Under 8 Years of Age.

16 CFR Section 1501 Method for Identifying Toys and Other Articles Intended for Use by Children Under 3 Years of Age Which Present Choking, Aspiration or Ingestion Hazards Because of Small Parts

Americans With Disabilities Act, Public Law 101–336:

28 CFR 35 Title II, Subtitle A

28 CFR 36 Title III, Appendix A

36 CFR Part 1191 Americans with Disabilities Act Accessibility Guidelines (ADAAG)

[1] This safety performance specification is under the jurisdiction of ASTM Committee F15 on Consumer Products and is the direct responsibility of Subcommittee F15.36 on Soft-Contained Play Systems.

Current edition approved Aug. 1, 2021. Published September 2021. Originally approved in 1998. Last previous edition approved in 2017 as F1918 – 12 (2017). DOI: 10.1520/F1918-21.

[2] More information on federal requirements for play equipment accessibility may be obtained from the Office of Technical and Information Services, Architectural and Transportation Barriers Compliance Board, 1331 F Street, NW, Suite 1000, Washington, DC 20004-1111 or at www.access-board.gov/play/finalrule.htm.

[3] For referenced ASTM standards, visit the ASTM website, www.astm.org, or contact ASTM Customer Service at service@astm.org. For *Annual Book of ASTM Standards* volume information, refer to the standard's Document Summary page on the ASTM website.

[4] The last approved version of this historical standard is referenced on www.astm.org.

[5] *Code of Federal Regulations*, available from U.S. Government Printing Office, Washington, DC 20402.

Copyright © ASTM International, 100 Barr Harbor Drive, PO Box C700, West Conshohocken, PA 19428-2959. United States

Slick Slide 2018

Downloaded/Printed/Accessed by user: Stephen, Spiegelberg | Date: Mon Apr 28 11:24:33 2025

2.3 *Other Standards:*

UL Standard 94 Test for Flammability of Plastic Materials for Parts, Devices, and Appliances

UL Standard 1975 Fire Tests for Foamed Plastics Used for Decorative Purposes

NFPA 101 Life Safety Code

NFPA 701 Standard Methods of Fire Tests for Flame Propagation of Textiles and Films

National Electrical Code (NEC)

California Technical Bulletin 117

3. Terminology

3.1 *Definitions:*

3.1.1 *accessible, adj*—relating to a part or portion of the play system that is (*1*) capable of being contacted by any body part, or (*2*) available to and usable by persons with disabilities.

3.1.2 *air filled device, n*—a play activity which allows the user to bounce upon an inflated structure within soft contained play equipment.

3.1.3 *alternative means of hand support, n*—netting or other material that follows the path of access or egress, that, when grasped, provides balance and support in maintaining a specific body posture.

3.1.4 *ball pool, n*—any contained area with loose balls for the purpose of play or transition.

3.1.5 *barrier, protective, n*—an enclosing device that is intended to prevent both inadvertent and deliberate attempts to pass through the device.

3.1.6 *climber, n*—any component with the purpose of ascending or descending transition.

3.1.7 *completely bounded non-rigid opening, n*—any opening in SCPE that is totally enclosed by flexible boundaries which can deform or deflect during normal use (for example, the openings in a flexible net or lattice of webbing).

3.1.8 *completely bounded opening, n*—any opening in SCPE that is totally enclosed by boundaries on all sides so that the perimeter of the opening is continuous.

3.1.9 *component, n*—a part of a play system, any portion thereof that generates specific activity and does not stand alone.

3.1.10 *containment wall, n*—vertical part of the SCPE, usually made up of netting, mesh or paneling, which serves to enclose the SCPE.

3.1.11 *designated play surface, n*—any elevated surface for standing, walking, sitting or climbing; or flat surface larger than 2 in. (50 mm) wide by 2 in. (50 mm) long having less than a 30° angle from horizontal.

3.1.12 *emergency access/egress pathway, n*—a clear and unencumbered path which leads directly into or out of the play equipment in a continuous manner.

3.1.13 *entanglement, n*—a condition in which the user's clothing or something around the user's neck becomes caught or entwined on a component of playground equipment.

3.1.14 *fabric, mesh, n*—a woven fabric with a permeable network made from interlacing threads or mono filament fibers.

3.1.15 *fabric, solid, n*—a coated or laminated closed weave fabric.

3.1.16 *fall height, n*—the vertical distance between a designated play surface and the protective surfacing beneath it.

3.1.17 *flexible component, n*—any part of the SCPE that temporarily changes its shape when in use; examples include the tire net, the cargo net, and the log bridge.

3.1.18 *netting, n*—an open work fabric made of threads, cords, or mono filament fibers woven or knotted together at regular intervals.

3.1.19 *net, webbing, n*—a lattice of webbing sewn or otherwise affixed together at overlapping conjunctions.

3.1.20 *partially bounded opening, n*—any opening in SCPE that is not totally enclosed by boundaries on all sides so that the perimeter of the opening is discontinuous.

3.1.21 *platform, n*—a flat surface, intended for more than one user to stand upon, and upon which the user can move freely.

3.1.22 *play area, n*—a designated space intended for children's play.

3.1.23 *play opportunity, n*—any piece of equipment intended to generate specific recreational and/or learning activity.

3.1.24 *preventive maintenance, n*—a planned program of inspections and maintenance intended to keep equipment functioning properly and to forestall equipment failures.

3.1.25 *projection, n*—a condition which, due to its physical nature, must be tested to requirements of this standard to determine whether it is a protrusion or an entanglement hazard or both.

3.1.26 *protective surfacing, n*—surfacing material(s) to be used within the use zone of SCPE.

3.1.27 *protrusion, n*—a projection which, when tested in accordance with requirements of this standard, is found to be a hazard having the potential to cause serious bodily injury to a user who impacts it.

3.1.28 *slide exit region, n*—the lower end of a slide intended to slow the user before exiting.

3.1.29 *slide use zone, n*—the area immediately adjacent to accessible parts of the slide that is designated for circulation and on the surface of which a user would land when falling from or exiting the slide.

3.1.30 *soft contained play, equipment (SCPE), n*—a play structure made up of one or more components where the user enters a fully enclosed play environment that utilizes pliable material(s) (for example, plastic, netting, or fabric).

3.1.31 *stair, n*—device having a slope of 50° or less from a horizontal plane and consisting of a series of steps that can be used for ascending and descending.

3.1.32 *step, n*—horizontal flat crosspiece of a ladder or of a stair used primarily as a foot support.

3.1.33 *upper body equipment, n*—equipment intended to be grasped by the user's hands and maneuvered upon using only the hands and arms.

Downloaded/Printed/Accessed by user: Stephen, Spiegelberg | Date: Mon Apr 28 11:24:33 2025

3.1.34 *webbing, n*—a woven narrow gauge flat fabric.

3.1.35 *zone, non-use, n*—locked or secured area around or underneath the play system where unauthorized access is not allowed.

3.1.36 *zone, use, n*—the area immediately adjacent to all external areas of the SCPE that is designated for circulation and on the surface of which a user would land when falling from or exiting the equipment.

4. General Requirements

4.1 Playground equipment represented as complying with this consumer safety performance specification shall meet all applicable requirements specified herein. Anyone representing compliance with this specification shall keep such essential records as are necessary to document any claim that the requirements within this specification have been met.

4.2 SCPE should be designed to allow natural air circulation and lines of visibility between users and persons supervising.

5. Materials and Manufacture

5.1 *General Requirements*—Soft contained play equipment shall be manufactured and constructed only of materials that have a demonstrated durability in the playground or similar setting. Any new materials shall be documented or tested for durability by the soft contained play equipment manufacturer.

5.1.1 Regardless of the material or the treatment process used, the manufacturer shall not utilize materials known to be hazardous (for example, lead, arsenic, creosote). All paints or similar finishes shall comply with 16 CFR Part 1303.

5.2 All fasteners used to construct soft contained play equipment shall be manufactured in accordance with Guide F1077 and shall meet the requirements of Section 6.

5.2.1 All fasteners, connecting, and covering devices shall be inherently corrosion resistant or be provided with a corrosion resistant coating.

5.2.2 When installed in accordance with the manufacturer's instructions, fasteners, connecting, and covering devices shall not loosen or be removable without the use of tools. Lock washers, self-locking nuts, or other locking means shall be provided for all fasteners to secure them from unintentional loosening. Hardware in moving joints shall also be secured against unintentional loosening.

5.2.3 Connecting devices and hooks shall be subject to the requirements of Section 6.

6. Performance Requirements

6.1 These requirements apply to the play equipment and do not apply to nonuse zones.

6.2 *Head and Neck Entrapment*—Soft contained play equipment shall be designed and constructed or assembled so that any accessible opening shall meet the following performance requirements to reduce the risk of head or neck entrapment by either a head first or feet first entry into the opening. Openings between the bottom edge of the equipment and the surface directly beneath it (that is, the ground or floor) are exempt from this requirement.

6.2.1 *Accessible Openings*—A completely bounded rigid opening is accessible when it is possible to insert the torso test probe (see Fig. A1.1) into the opening to a depth of 4.0 in. (100 mm) or more.

6.2.1.1 *Test Procedure for Completely Bounded Rigid Openings*—Align the torso probe (see Fig. A1.1) so that the plane of its base is parallel to the plane of the opening. Rotate the probe to its most adverse orientation (that is, major axis of the base of the probe parallel to the major axis of the opening) and attempt to insert it in the opening. If it is possible to insert the torso probe into the opening to a depth of 4.0 in. (100 mm) or more, place the head probe (see Fig. A1.2) in the opening with the plane of the base of the probe parallel to the plane of the opening. An opening passes this test if (*1*) the opening does not admit the torso probe when it is rotated to any orientation about its own axis, or (*2*) the opening admits the torso probe and also admits the head probe. An opening fails the test if the opening admits the torso probe but does not admit the head probe.

6.2.2 *Nonrigid Completely Bounded Openings*—A nonrigid opening such as may be found in but not limited to flexible nets, tarps, and plastic enclosures is considered accessible if a torso probe will penetrate the opening to a depth of 4.0 in. (100 mm) or more when tested in accordance with the test procedure outlined in 6.2.2.1 (see Figs. A1.1 and A1.2 for probe dimensions).

6.2.2.1 *Test Procedure for Completely Non-rigid Bounded Openings*—Align the torso probe (see Fig. A1.1) so that the plane of its base is parallel to the plane of the opening. Rotate the probe to its most adverse orientation (that is, major axis of the base of the probe parallel to the major access of the opening). Apply a force 50 lbf (220 N) to the probe to attempt to pass it through the opening. If the base of the probe passes through the opening, place the large head probe in the opening, tapered end first, with the plane of its base parallel to the plane of the opening. Apply a force of 50 lbf (220 N) to the probe to attempt to pass it through the opening. A nonrigid opening passes the test if: (*1*) the opening does not allow the torso probe to be inserted so deep that the opening admits the base of the probe when it is rotated to any orientation about its own axis, or (*2*) the opening allows full passage of the torso probe and also allows the large head probe to pass completely through. A nonrigid opening fails the test if the opening allows full passage of the torso probe but does not admit the large head probe.

6.2.3 *Angular Portions of Openings*—Angles formed by the surfaces of an opening (that is, adjacent surfaces or surfaces that intersect when projected with a distance between surfaces greater than 9.0 in. (230 mm)) should be at least 55° unless one of the conditions defined in 6.2.3.1 exists.

6.2.3.1 Exemptions to 6.2.3:

(1) Inverted Angle of V Condition—Those V's which are inverted. A V is considered inverted if the lower adjacent leg forming the V is horizontal or slopes downward from the apex (see Fig. A1.3).

(2) Filled Apex Condition—V angles less than 55° where the apex of the angle is filled to the point that will not allow the head probe (see Fig. A1.3) to contact both surfaces of the angle

Downloaded/Printed/Accessed by user: Stephen, Spiegelberg | Date: Mon Apr 28 11:24:33 2025

simultaneously when the probe is rotated to any orientation about its own axis (see Fig. A1.3).

6.3 *Sharp Points and Edges*—There shall be no accessible sharp points or edges, on soft contained play equipment.

6.3.1 *Sharp Points and Sharp Edges*—All points and edges on soft contained play equipment shall be tested for sharpness in accordance with the federal technical requirements in 16 CFR 1500 referenced in 2.2.

6.3.2 The exposed open ends of all tubing not resting on the ground, or otherwise covered, shall be provided with caps or plugs that cannot be removed without the use of tools.

6.3.3 Suspended members, such as rings on upper body equipment and swing seats, shall have a minimum radius of 0.25 in. (6 mm) on corners and edges. This requirement does not apply to swing belt seats, straps, ropes, chains, connectors, and other flexible components.

6.3.4 A cut-off bolt end projecting beyond the face of the nut shall be free of burrs, sharp points, and sharp edges.

6.4 *Protrusions*—There shall be no protrusions on the accessible portions of soft contained play equipment. Four protrusion test gauges (shown in Fig. A1.4 and Fig. A1.5) are required to determine whether projections are protrusions. Their use is described in this section.

6.4.1 *Accessible Projections*—A projection is not accessible and is not a protrusion when it is recessed or located in such a manner that does not allow any of the protrusion gauges to be placed over it. Any of the conditions described in the remainder of this section constitutes a protrusion hazard.

6.4.2 *Determining Whether a Projection is a Protrusion*—Successively place each of three gauges (see Fig. A1.4) over each accessible projection (see Figs. A1.6 and A1.7). Determine whether the projection extends beyond the face of any gauge. The projection fails the test and is a protrusion if it extends beyond the face of any of the three gauges.

6.4.3 *Suspended Member Protrusions*—Test for this condition with the suspended member in all positions of its intended travel. Place the suspended member protrusion gauge (see Fig. A1.5), oriented vertically, over any projection accessible at any point throughout the path of travel. Any projection on the front or rear surface of suspended members of swing assemblies which extends beyond the face of the test gauge (see Fig. A1.5) is a protrusion.

6.5 *Entanglement*—There shall be no accessible entanglement hazards on soft contained play equipment. Three test gauges, a feeler gauge, and the means to accurately measure a 0.12 in. (3 mm) extension are required to determine whether entanglement hazards exist. Any of the conditions described in this section constitutes an entanglement hazard.

6.5.1 *Slides*—Slides, especially in their entrance areas, together with their means of attachment, pose a greater risk of entanglement than other play components. Therefore, the following requirements apply to slides in the areas shown in Fig. A1.8.

6.5.1.1 A projection that meets both of the following conditions is an entanglement hazard: (*1*) The projection allows one of the three protrusion gauges (see Fig. A1.4) to pass over it and contact the initial surface, and (*2*) the projection extends perpendicular (±5°) from the initial surface more than 0.12 in. (3 mm).

6.5.1.2 Slides shall be constructed in such a manner as to provide a smooth continuous sliding surface (roller slides exempted), with no gaps or spaces that might create an entanglement hazard such as but not limited to the space created between sidewalls when two single slides are combined to create a doublewide slide or the point where a hood attaches to the sidewalls of a slide.

6.5.2 *Projections from a Horizontal Plane*—A projection that meets all of the following three conditions is an entanglement hazard.

6.5.2.1 The projection fits within any of the three protrusion gauges (see Fig. A1.4).

6.5.2.2 It projects upwards from a horizontal plane (see Fig. A1.9 (1) through (6) and Fig. A1.10).

6.5.2.3 The projection extends greater than 0.12 in. (3 mm) perpendicular (±5°) to the plane of the initial surface (see Fig. A1.9 (1) through (6) and Fig. A1.10).

6.5.3 *Exposed Bolt End Projections*—Any accessible bolt end projecting beyond the face of the nut more than two full threads is an entanglement hazard. A bolt end is inaccessible and not an entanglement hazard when it is not possible for any of the three protrusion gauges (see Fig. A1.4) to pass over it or if the bolt end is recessed and the 3.5 in. (89 mm) OD protrusion gauge (see Fig. A1.4) cannot be made to contact the bolt end when the outside curve of the gauge is placed flat against the recessed area (see Fig. A1.11).

6.5.4 *Projections That Increase in Size*—Any projection that fits within any of the three protrusion test gauges (see Fig. A1.4) and increases in size or diameter from the initial surface to the outer end (see Fig. A1.9 (7)) is an entanglement hazard.

6.5.5 *Connecting Devices*—Connecting devices such as but not limited to, S-hooks, pelican hooks, and C-hooks, when properly closed, are not entanglement hazards. These connectors are considered closed when there is no gap or space greater than 0.04 in. (1 mm) when measured with a feeler gauge (see Fig. A1.12 (1)).

6.5.5.1 S-hook connectors are subject to the additional requirements in 1 through 3 below, since failure to meet any of the corresponding requirements will result in an entanglement hazard.

(1) No portion of the closed end of an S-hook lower loop shall project beyond the vertical boundary established by the upper loop (see Fig. A1.12 (2)).

(2) An S-hook upper loop that completely overlaps the connector body shall not extend past the connector body (see Fig. A1.12 (3)). An S-hook upper loop shall also be permitted to align with or partially overlap with the connector body.

(3) An S-hook lower loop shall align with the connector body and not overlap it in any way (see Fig. A1.12 (4)).

6.5.6 Windows in slides must be completely covered with a transparent material. Windows and their means of attachment must meet the requirements of 6.4.

6.6 *Crush and Shear Points*—There shall be no crush, or shear points caused by junctures of two components moving relative to one another, or at an opening present at the junction

Downloaded/Printed/Accessed by user: Stephen, Spiegelberg | Date: Mon Apr 28 11:24:33 2025

of a stationary support and a rigid supporting member for a swinging element (for example, pendulum see saw and glide rides) while the swinging elements are within their normal swinging angles. A crush or shear point is any point that entraps at one or more positions at 0.625 in. (16 mm) diameter rod.

6.6.1 To reduce the likelihood of unintentional contact with a crush or shear point, an opening shall comply with either 6.6.1.1 or 6.6.1.2.

6.6.1.1 An opening with a minor dimension of less than 1 in. (25 mm) is acceptable if a finger probe (as illustrated in Fig. A1.13), when inserted point first into an opening, cannot be made to touch any crush or shear point. The probe shall be applied in all possible articulated positions with an applicable force not to exceed 1 lbf (4 N).

6.6.1.2 An opening in an enclosure with a minor dimension of 1 in. (25 mm) or more, shall require that the crush or shear point be located at a distance as specified in Table 1 from the plane of the opening.

NOTE 1—An enclosure in this case covers a crush or shear point.

6.6.1.3 Exemptions to 6.6:

(1) Chain and its method of attachment, and

(2) The attachment of heavy duty coil springs to the body and base of rocking equipment.

(3) The area between small lightweight moving parts necessary as an integral part of the play activity (for example, abacus beads, bell clappers, telephone receivers) provided that this area is not considered a crush or shear point.

6.7 Rope, cable, or chain shall be fixed at both ends and not be capable of being looped back on itself, creating an inside loop perimeter greater than 5 in.

7. Requirements for Access/Egress

7.1 *Rung Ladders, Stepladders, Stairways, and Ramps (Does Not Address Wheelchair Use):*

7.1.1 Steps and rungs shall be evenly spaced within a tolerance of ±0.25 in. (±6.4 mm) and horizontal within a tolerance of ±2°.

7.1.2 Steps and rungs shall not trap water (that is, no standing water) and should not encourage the accumulation of debris.

7.1.3 See Table 2 for access slope, tread, rung, or ramp width, tread depth, ladder rung diameter, and vertical rise.

7.1.4 *Handrails:*

TABLE 1 Minimum Acceptable Distance from an Opening to a Crush or Shear Point

Minimum Dimension of Opening,[A] in. (mm)[B]	Minimum Distance from Opening to Part, in. (mm)
1.0 (25)	6.5 (165)
1.25 (32)	7.5 (190)
1.5 (38)	12.5 (320)
1.875 (48)	15.5 (395)
2.125 (54)	17.5 (445)
More than 2.125 (54) and less than 6.0 (150)	30.0 (760)

[A] See 6.6.1.2.

[B] Between 1 and 2.5 in. (25 and 64 mm) interpolation is used to determine values specified in the table.

7.1.4.1 Continuous handrails or alternative means of hand support shall be provided on both sides of stairways (see 7.2.1.3 for spiral stairways) and stepladders that have more than one tread.

7.1.4.2 Stairways or stepladders which consist of only one tread shall have handrails or alternative means of hand support on both sides.

7.1.4.3 Handrails or other means of hand support shall be available for use at the beginning of the first step.

7.1.4.4 Handrails shall be between 0.95 and 1.55 in. (24 and 39 mm) in diameter or maximum cross section.

7.1.4.5 Handrails or alternative means of hand support height (the vertical distance between the top front edge of a step or, if used on a ramp, the top of the ramp surface, and the top surface of the handrail above it) shall be between 22 and 38 in. (560 and 970 mm).

7.2 *Other Means of Access:*

7.2.1 *Spiral Stairways:*

7.2.1.1 Spiral stairways shall meet the general requirements for spacing, orientation, drainage, tread width, and vertical rise specified for stairway access in 7.1.1 through 7.1.3.

7.2.1.2 The depth of the outer edge of the tread on spiral stairways shall be 7.0 in. (178 mm) or greater on equipment for children 2 through 5 years, and 8.0 in. (203 mm) or greater on equipment for children 5 through 12 years. These depth requirements apply to spiral stairways with both open or closed risers.

7.2.1.3 Spiral stairways shall meet the requirements specified for handrails in 7.1.4. However, when the design of the stairway does not permit handrails on both sides of the stairway, a continuous handrail or alternative means of hand support shall be provided along the outside perimeter of the steps.

7.2.2 *Flexible Components:*

7.2.2.1 Flexible components used as access to other components of equipment shall be securely connected at both ends. When one end is connected to the ground, the anchoring devices shall be beneath the base of the minimum required depth of the protective surfacing material.

7.2.2.2 Connections between flexible components used as access to other components of equipment shall be securely fixed.

7.2.2.3 Flexible components used as access to other components of equipment for use by 2 through 5 year olds shall readily allow users to bring both feet to the same level before ascending to the next level.

7.3 *Transition from Access to Platform:*

7.3.1 On stairways and stepladders, there shall be a continuation of handrails from the access to the platform.

7.3.2 On accesses that do not have side handrails or alternative means of hand support such as rung ladders or flexible components, there shall be alternative hand-gripping support to facilitate the transition to the platform.

7.3.3 For rung ladders, flexible components, and arch climbers, the stepping surface used for final access shall not be above the designated play surface it serves.

Downloaded/Printed/Accessed by user: Stephen, Spiegelberg | Date: Mon Apr 28 11:24:33 2025

TABLE 2 Rung Ladders, Stepladders, Stairways, and Ramps (Access Slope, Tread, Rung, and Ramp Width, Tread Depth, Rung Diameter, and Vertical Rise, by Age of Intended User)

Type of Access	Age of Intended User, years		
	2 through 5	5 through 12	2 through 12
Rung Ladders:[A]			
Slope	75 to 90°	75 to 90°	75 to 90°
Total ladder width[B]	≥12 in. (300 mm)	≥16 in. (410 mm)	≥16 in. (410 mm)
Vertical rise (top of rung to top of rung)	≤12 in.[C] (300 mm)	≤12 in.[C] (300 mm)	≤12 in.[C] (300 mm)
Rung diameter	0.95 to 1.55 in. (24 to 39 mm)	0.95 to 1.55 in. (24 to 39 mm)	0.95 to 1.55 in. (24 to 39 mm)
Stepladders:			
Slope	50 to 75°	50 to 75°	50 to 75°
Tread width:			
Single file access	12 to 21 in. (300 to 530 mm)	≥16 in. (410 mm)	16 to 21 in. (410 to 530 mm)
Two-abreast access	[A]	≥36 in. (910 mm)	[A]
Tread depth:			
Open riser	≥7.0 in. (178 mm)	≥3.0 in. (76 mm)	≥7.0 in. (178 mm)
Closed riser	≥7.0 in. (178 mm)	≥6.0 in. (152 mm)	≥7.0 in. (178 mm)
Vertical rise (top of step to top of step)	≤9.0 in.[C] (229 mm)	≤12.0 in.[C] (305 mm)	≤9.0 in.[C] (229 mm)
Stairways:			
Slope	<50°	<50°	<50°
Tread width:			
Single file access	≥12 in. (300 mm)	≥16 in. (410 mm)	≥16 in. (410 mm)
Two-abreast access	≥30 in. (760 mm)	≥36 in. (910 mm)	≥36 in. (910 mm)
Tread depth:			
Open riser	≥7.0 in. (178 mm)	≥8.0 in. (203 mm)	≥8.0 in. (203 mm)
Closed riser	≥7.0 in. (178 mm)	≥8.0 in. (203 mm)	≥8.0 in. (203 mm)
Vertical rise (top of step to top of step)	≤9.0 in.[C] (229 mm)	≤12.0 in.[C] (305 mm)	≤9.0 in.[C] (229 mm)
Ramps (does not address wheelchair use)			
Slope (vertical/horizontal)	≤1:8	≤1:8	≤1:8
Width:			
Single file access	≥12.0 in. (300 mm)	≥16.0 in. (410 mm)	≥16.0 in. (410 mm)
Two-abreast access	≥30.0 in. (760 mm)	≥36.0 in. (910 mm)	≥36.0 in. (910 mm)

[A] Not recommended as sole access for preschoolers.
[B] Excluding side supports.
[C] Entrapment provisions apply.

7.4 *Platforms, Landings, Walkways, Ramps, and Similar Transitional Play Surfaces:*

7.4.1 Platform surfaces shall be horizontal within a tolerance of ±2°.

7.4.2 Platforms, landings, walkways, ramps, and similar transitional play surfaces shall not trap water and should not encourage accumulation of debris.

7.5 *Access/Egress Accessibility:*

7.5.1 When an accessible entrance for disabled users is provided, a means of egress shall also be provided.

7.5.2 All accessible entries shall provide wheelchair parking spaces meeting the requirements of ADAAG.

7.5.3 All wheelchair parking spaces should be clear of obstructions, and not overlap other access and egress use zones.

8. Equipment

8.1 *General Equipment Requirements:*

8.1.1 For parts of the SCPE which serve as a barrier between accessible and non-accessible areas of the SCPE, the vertical distance between the lowest part of the SCPE and the surface beneath (that is, the ground, floor and resilient surfacing) shall not exceed 4.0 in.

8.1.2 Users shall not be able to exit from the contained equipment except at designated access and egress points. All accessible openings in the contained play equipment other than specified access/egress points shall not admit the torso probe as specified in the test procedure for completely bounded rigid openings (6.2.1.1) and as specified in the test procedure for completely bounded nonrigid openings (6.2.2.1).

8.1.3 Differences in height between two consecutive designated play surfaces shall not exceed 24 in. (610 mm) unless the lower designated play surface is made to conform to Specification F1292 for impact attenuation.

8.1.4 Differences in height between two consecutive designated play surfaces shall not exceed 24 in. (610 mm) in locations where it is possible to enter the lower designated play surface from a passage blind to a user on the upper designated play surface.

8.1.5 Any flexible material or device in a soft contained play system that is able to be stretched by a force of 50 lbf (220 N) applied with the torso probe (as identified in Section 6) shall not contact any hard object. Flexible portions of the soft contained play equipment shall not be placed adjacent to potential impact hazards such as glass windows or furniture.

8.1.6 *External Parts of SCPE:*

8.1.6.1 *Accessible External Containment Walls:*

(1) Accessible external containment walls of the SCPE will have a minimum height of 84 in., when measured from the surface directly adjacent to the base of the SCPE. (See Fig. A1.14.) If the height of the ceiling precludes this, the containment wall of the SCPE shall extend to a height such that the top of the external portion of the SCPE is 3.0 in. or less from the ceiling. If there is an elevated surface which has the potential to allow standing, walking, crawling, sitting, or climbing, or a flat surface larger than 2 in. wide by 2 in. long having less than

Downloaded/Printed/Accessed by user: Stephen, Spiegelberg | Date: Mon Apr 28 11:24:33 2025

a 30° angle from horizontal (for example, slide exit, window ledge) that is located at a distance of 28 in. or less from the containment wall of the SCPE, and at a height of 84 in. or less above ground level, the minimum height of the containment wall shall be 84 in. above the highest portion of this elevated surface and 84 in. above a horizontal line extending 36 in. from each edge of highest portion of the referenced elevated surface (see Fig. A1.14). If the height of the ceiling precludes this, the containment wall of the SCPE shall extend to a height such that the top of the external portion of the SCPE is 3.0 in. or less from the ceiling.

(2) There shall be no openings in the containment wall 84 in. or less above the bottom of the containment wall that admit the 0.50-in. diameter test probe (see Fig. A1.15) to a depth greater than 0.75 in.

(3) There shall be no projections from the containment wall 84 in. or less above the bottom of the containment wall and greater than 0.50 in. in width (as measured along the top of the projection) or diameter that extend more than 0.75 in. from the containment wall.

NOTE 2—Any projections from the containment wall must also meet the requirements of 6.4 on protrusions and 6.5 on entanglement.

(4) Openings between a gate (for example, to utility areas) and the enclosure which surrounds the gate in external containment walls are exempt from 8.1.6.1*(2)* with the following conditions: *(a)* the bottom of the opening at the base of the gate is 6 in. or less above the ground or floor, and *(b)* there are no openings directly above hinges, latches, or other horizontal surfaces that admit 0.50-in. diameter test probe to a depth greater than 0.75 in.

(5) Activity panels that are part of or affixed to external containment walls and which are extended for a user to maintain ground contact during play are exempt from 8.1.6.1*(2)* and 8.1.6.1*(3)* if there are no openings in or projections from the containment wall 48 in. or less above the top of the activity panel.

8.1.6.2 *Overhead Framework:*

(1) Overhead horizontal pipes that are within 96 in. of the underlying surfaces and having diameters of less than 5 in. shall have no more than 270° of the pipe exposed; or shall have a vertical barrier panel that extends from the top of the horizontal pipe to a minimum height of 96 in. above the underlying surface.

(2) I-beam support structures within 96 in. of the underlying surface shall have no designated play surfaces and no openings that would allow a user to grasp a section of the beam for support.

8.1.7 *Pipe Covering:*

8.1.7.1 *Vertical Pipe Covering:*

(1) When fabric mesh is used as a means of containment, padded or pliable covering shall be used on all exposed vertical pipes at entrance and exit areas and in all accessible areas where 270° or more of the pipe is exposed. (See Fig. A1.16.)

(2) If other materials (for example, metal or plastic mesh, solid panels) are used as a means of containment, vertical pipe is not required to be covered.

8.1.7.2 *Horizontal Pipe Covering:*

(1) All accessible horizontal pipe located within 60 in. of any designated play surface and having 270° or more of the pipe accessible shall have a padded or pliable cover. (See Fig. A1.17.)

(2) Within any entrance/exit, slide run out, or step up/down area, any accessible overhead horizontal pipe located within 60 in. of the edge of a designated play surface (for example, leading edge of a platform, change of elevation or the end of a slide exit) and having 180° or more of the pipe accessible shall have a padded or pliable cover. (See Fig. A1.18.)

NOTE 3—The area directly above the enclosed portion of a slide exit does not require padding.

8.2 *Climbers and Upper Body Equipment:*

8.2.1 Hard rungs that are used for hand grip shall be between 0.95 in. and 1.55 in. (24 mm and 39 mm) in diameter.

8.2.2 Padded rungs that are used for hand grip shall be between 0.95 in. and 1.55 in. (24 mm and 39 mm) in diameter when fully compressed.

8.2.3 Padded rungs that are used for hand grip shall be no larger than 1.55 in. (39 mm) in diameter when not compressed.

8.2.4 All rungs used for hand grip, and any padding used on them, shall not spin, rotate, or roll while in use.

8.2.5 The center to center distance between rungs on upper body equipment with fixed handholds shall be no greater than 15 in. (380 mm).

8.2.6 The horizontal distance from the leading edge of the takeoff or landing structure or both, out to the center line of the first handhold of upper body equipment shall be no greater than 10 in. (250 mm). In addition, where the takeoff or landing point is provided by means of rungs, the horizontal distance to the first handhold shall be at least 8 in. but no greater than 10 in.

8.2.7 All handgrip devices on upper body equipment shall be between 0.95 in. (24 mm) and 1.55 in. (39 mm) in diameter.

8.2.8 Climbers or chutes used as access shall provide a means of hand support for use while climbing.

8.3 *Sliding Poles:*

8.3.1 Sliding poles are not recommended in SCPE.

8.4 *Balance Beams:*

8.4.1 The top surface of balance beams shall be no greater than 12 in. (300 mm) above the underlying surface.

8.4.2 Support structures for balance beams shall not pose a tripping hazard.

8.5 *Slides:*

8.5.1 At the entrance to open bedway slides there shall be a means to channel the user into a sitting position (for example, a hood or tube).

8.5.2 Any change in the slope of a slide shall not allow a user to lose contact with the sliding surface.

8.5.3 *For Straight Slides Only*—The height to length ratio of the sliding surface shall not exceed 0.577 (30°) as measured in Fig. A1.19.

8.5.4 No span of the sliding surface shall have a slope that exceeds 50°.

8.5.5 The slide chute inside width shall be 12 in. (300 mm) or greater for 2 through 5-year-olds, or 16 in. (410 mm) or greater for 5 through 12-year-olds.

Downloaded/Printed/Accessed by user: Stephen, Spiegelberg | Date: Mon Apr 28 11:24:33 2025

8.5.6 Slides with flat, open chutes shall have sidewalls with a height 4 in. (100 mm) or greater, that extend along both sides of the chute for the entire length of the sliding surface.

8.5.7 Straight slides shall be permitted to have a chute with a circular, semicircular, or curved cross section, provided that the heights of both sides are 4 in. (100 mm) (y) when measured at right angles above a horizontal line (x) that is 12 in. (300 mm) long when intended for 2 through 5-year-olds or 16 in. (400 mm) long when intended for 5 through 12-year-olds (see Fig. A1.20).

8.5.8 All slides with a curved path of travel shall minimize the likelihood of lateral discharge (for example, spiral slides and other slides that change in horizontal direction; slides with a wide, shallow chute; and so forth).

8.5.9 The internal diameter of tube slides shall be 23 in. (580 mm) or greater.

8.5.10 *Roller Slides Shall Meet the Following Criteria:*

8.5.10.1 There shall be no crush, shear, entrapment, entanglement, or catch points between the junctures caused by two or more components of a roller slide.

8.5.10.2 A crush, shear, entrapment, entanglement, or catch point is any point that will admit a 0.19 in. (5 mm) diameter neoprene test rod at one or more positions, either between rollers or adjacent stationary segments.

8.5.10.3 The neoprene test rod shall have a hardness reading between 50 and 60 as determined by a Type A durometer in accordance with Test Method D2240.

8.5.11 *Slide Exit Regions Shall Meet the Following Criteria:*

8.5.11.1 For slides with an elevation of no greater than 48 in. (1.2 m), the height of the slide exit region shall be no greater than 11 in. (280 mm) above the protective surfacing. For slides with an elevation greater than 48 in. (1.2 m), the height of the slide exit region shall be between 7 and 15 in. (180 and 380 mm) above the protective surfacing (see Fig. A1.21).

8.5.11.2 The slope of the slide exit region shall be between 0 and –4° as measured from a horizontal plane (see Fig. A1.22).

8.5.11.3 Slides shall have a slide exit region length of 11 in. (280 mm) or greater (see Fig. A1.22)

8.5.11.4 The radius of curvature of the sliding surface in the exit region shall be 30 in. (760 mm) or greater (see Fig. A1.22).

8.5.11.5 Slide exit region edges shall be rounded or curved.

8.5.12 Slide use zones shall meet the requirements of 9.3.

8.6 *Air Filled Devices:*

8.6.1 Air filled devices shall meet the structural integrity criteria as specified in Section 10, without the designated play surface of the device contacting a hard substrate or floor when fully loaded.

8.6.2 Air filled devices upon which users are intended to walk or crawl shall be secured to minimize lateral movement during use.

8.6.3 Blowers and electrical cords shall be kept out of reach of the public located in a non-use zone.

8.6.4 Electrical cords shall not pass under the air filled device and shall not interfere with its operation.

8.6.5 The air filled device shall be fully inflated before users are allowed inside during use.

8.7 *Upholstery:*

8.7.1 Hardware, staples, or fastening devices used in the construction of padding or upholstered constructions (assemblages of fabrics, foams, and substrates) or both, shall not have hidden sharp points or hazards when the surface of the pad or upholstered construction is fully compressed by a user.

8.8 *Ball Pools:*

8.8.1 There shall be no designated play surfaces in ball pools other than the floor of the ball pool itself, except at designated access/egress points.

8.9 *Log Rolls:*

8.9.1 Log rolls are not recommended for children under 5 years of age.

8.9.2 The highest point of the top surface of the roller shall be no greater than 18 in. (460 mm) above the underlying surface.

8.9.3 Rigid hand-gripping component(s) shall be provided, and shall aid in mounting and dismounting the roll, and maintaining balance while in use. The handgripping component(s) shall meet the same dimensional requirements as stated for rungs in 8.2.1 – 8.2.4.

8.10 *Track Rides:*

8.10.1 Track rides are not recommended for children under 5 years of age.

8.10.2 The lowest portion of the hand-gripping component shall be a minimum of 64 in. (1630 mm) above the surfacing. The maximum height of the hand-gripping components shall not exceed 78 in. (1980 mm). The hand-gripping component shall comply with Sections 8.2.1 through 8.2.4.

8.10.3 The vertical distance between the overhead hand gripping component and the surface shall be uniform throughout the length of the ride.

8.10.4 Track rides should be designed to prevent the structural elements from obstructing the user in the landing area.

8.10.5 An unobstructed clearance zone shall be maintained throughout the length of travel of the hand-gripping component.

8.10.6 The center to center distance between adjacent tracks should be at least 48 in. (1220 mm).

8.10.7 When the rolling portions of the hand-gripping component are enclosed within the track beam, the track assembly is exempted from the crush and shear requirements.

9. Areas Outside Soft Contained Play Equipment

9.1 Areas immediately adjacent to all accessible parts of the SCPE shall have use zones which are free of obstacles and covered with resilient surfacing. The dimensions, configuration and fall heights or these use zones are defined in 9.2 – 9.5.

9.2 *Entrances and Exits (Except Slides):*

9.2.1 Use zones adjacent to all entrances and exits to the SCPE (except slides, which are addressed in 9.3) shall be free of obstacles and covered with resilient surfacing meeting the requirements of 9.2.4 for a minimum distance of at least 60 in. (1.5 m) from all portions of the entrance and exit which are outside of the contained area of the equipment.

Downloaded/Printed/Accessed by user: Stephen, Spiegelberg | Date: Mon Apr 28 11:24:33 2025

9.2.2 Use zones for entrances and exits shall be permitted to overlap and entrances and exits may share use zones (for example, entrances and exits may be located in each others use zone).

9.2.3 Use zones for entrances and exits shall be permitted to contain a barrier if such a barrier is parallel to the edge of the entrance or exit, and if the barrier is continuous and pliable or padded, or both (see Fig. A1.23).

9.2.4 Protective surfacing in use zones defined above shall meet Specification F1292 for the highest designated play surface outside of the contained area of the equipment.

9.2.5 Entrances and exits (except slides) which terminate within the SCPE are exempt from these requirements.

9.3 *Slide Use Zones:*

9.3.1 A slide use zone free of all equipment and obstructions shall be maintained around and 3 in. (76 mm) under all accessible parts of the slide. The slide use zone shall be covered with impact attenuating surfacing that meets the requirements of Specification F1292 for the highest designated play surface of the accessible parts of the slide or for 1 ft (300 mm) height, whichever is greater.

9.3.2 *Open Slides:*

9.3.2.1 Slides that do not have a completely bounded cross section (open slides) must meet the use zone requirements of Consumer Safety Performance Specification F1487, Section 9.6.

9.3.3 *Enclosed Slides:*

9.3.3.1 Slides with a completely bounded cross section, except at the slide exit region, are enclosed slides.

(1) The slide use zone for enclosed slides shall extend at least 60 in. (1.5 m) from all portions of the accessible parts of the slide, except directly in front of the slide exit (see Fig. A1.24).

(2) This slide use zone shall be permitted to contain a barrier which is parallel to the edge of the slide, if the barrier is continuous and pliable and/or padded (see Fig. A1.25). The portion of the barrier that is beyond the slide use zone as defined in 9.3.3.2(*1*) need not be pliable and/or padded (see Fig. A1.26), except as required by 8.1.7.

9.3.3.2 The slide use zone directly in front of the slide exit shall be as follows:

(1) If the length of the slide runout (measured from the 5° transition point to the end of the slide exit) is greater than or equal to 36 in. (910 mm), then the slide exit use zone in front of the slide exit shall extend at least 60 in. (1.5 m) from the end of the slide (see Fig. A1.27).

(2) If the length of the slide runout (measured from the 5 degree transition point to the end of the slide exit) is less than 36 in. (910 mm), then the slide exit use zone in front of the slide exit shall extend at least 72 in. (1.8 m) from the end of the slide (see Fig. A1.27).

9.3.4 Play activities (for example, balls, activity panels, climbing devices) and transfer station parking places shall not be present in the slide exit use zone.

9.3.5 Slide use zones shall be permitted to overlap with other play equipment (including slide) use zones if the highest designated play surfaces of both components are 30 in. or less above the top of the protective surfacing. Slide use zones directly in front of slide exits shall not overlap (see Fig. A1.28).

9.4 *Other Play Components Use Zones:*

9.4.1 Play components with a designated play surface, other than slides and entrances and exits, which are outside the contained area but attached to the SCPE, shall have a use zone which extends 60 in. (1.5 m) from all parts of the component that is outside the SCPE. The use zone shall be covered with impact attenuating surfacing that meets Specification F1292 for the highest designated play surface of the play component.

9.4.2 Use zones of play components with a designated play surface, other than slides and entrances and exits, which are outside the contained area but attached to the SCPE, shall be permitted to overlap with other play component use zones (including slide and entrance and exit use zones) if the highest designated play surfaces of both play components are 30 in. (760 mm) or less above the top of the protective surfacing.

9.4.3 Shoe bins are not considered play components and do not require protective surfacing. Shoe bins should be placed in an area which discourages climbing.

9.5 *Enclosure Materials:*

9.5.1 External portions of the SCPE which serve only to enclose the equipment and contain no designated play surfaces are exempt from use zone requirements.

10. Structural Integrity

10.1 The structural integrity tests are intended to be conducted by manufacturers on equipment at a test site and are not intended to be performed on equipment installed on the playground or as part of a routine maintenance program. This section is based on the use of performance tests for structural integrity.

10.1.1 As an alternate to the tests which follow, it is acceptable that a licensed architect or a licensed professional engineer certify through design calculations with accompanying seal, the integrity of the equipment if it were subjected to the test loads.

10.2 *Loading Test Criteria*

10.2.1 After conducting the tests in this section, there shall be no visible crack or breakage of any component and no form of permanent deformation of any component with the potential to adversely affect the structural integrity or safe use of the equipment.

10.3 *Strength of Track and Trolley Ride Assemblies and Structures:*

10.3.1 Track ride assembly (track, trolley, connectors, suspending members, and handle) shall be installed in accordance with the manufacturer's installation instructions. The test load shall be attached to the handle of the trolley assembly using a loading strap or straps having the dimensions shown in Fig. A1.29.

10.3.1.1 For track ride intended for use by a single person, the load distribution device shall be centered on the handle assembly with the trolley assembly centered on the track length, and a vertical downward force of 605 lb shall be applied. The force shall be applied gradually and maintained for 5 min.

Downloaded/Printed/Accessed by user: Stephen, Spiegelberg | Date: Mon Apr 28 11:24:33 2025

10.3.1.2 For track ride assemblies designated for use by more than one person, a load distribution device shall be placed at each designated user position and subjected to the test requirements of 10.3.1.1 simultaneously.

10.4 *Components and Structures Subject to Vertical Loads:*

10.4.1 Determine the number of simultaneous users, n, of a component or structure as specified in this section. If n is not a whole number, round to the next largest whole number. Place n load distribution devices on the component or structure in a manner that simulates the anticipated load distribution. Simultaneously load each load distribution device with a downward vertical force, F, given by the following equation:

$$F = (250)\left(1+\frac{1}{n}\right) \tag{1}$$

where:

F = force/load distribution device,
250 = user weight, lb, and
$\left(1+\frac{1}{n}\right)$ = dynamic factor.

The force shall be applied gradually and maintained for a period of 5 min.

10.4.2 *Individual Surface*

10.4.2.1 This section applies to components such as platforms, crawl tubes, junction boxes and stair treads. Determine the component projected surface area, A. For a rectangular horizontal platform, A = (length) × (width). For other than horizontal surfaces, A = the projection of the component use area onto a horizontal plane. The component use area is the maximum component extents which are normally contacted during use. Use this value of A in Eq 2 or Eq 3 and determine the number of users, n, (round to the next largest whole number). Use this value of n in Eq 1 to determine the magnitude of each force to be applied.

For A, ft^2 :

$$n = \frac{A}{3.72} \tag{2}$$

For A, m^2 :

$$n = \frac{A}{0.35} \tag{3}$$

10.4.2.2 *Slide Beds*—Determine the number of users, n, as follows: $n = L/36$, where L equals the length of the slide bed (see Fig. A1.21) in inches, or $n = L/910$, where L equals the length of the slide bed in millimeters. (Round to the nearest whole number.) Place n load distribution devices equally spaced on the slide bed. Load each distribution device with a downward vertical force given by the equation in 10.4.1. The force shall be applied gradually and then maintained for a period of 5 min. After the load for each loading device has been calculated by the equation, multiply the load by the number of users to obtain anticipated load.

10.5 *Protective Barriers (Including Netting):*

10.5.1 *Barriers Subject to Horizontal Loads:*

10.5.1.1 *Distributed Horizontal Load Test*—Apply a horizontal force, F, in a direction perpendicular to the barrier and away from the enclosed structure. Apply the force at a height of 36 in. (910 mm) above the standing surface and evenly distributed over the entire width of the barrier. For barriers that are less than 36 in. (910 mm) high, apply the force 12 in. (300 mm) below the top. The test force is given as follows:

$$F\ (\text{lbf}) = 120W \tag{4}$$

where W = the horizontal width of the barrier, ft.

10.5.2 *Barriers Subject to Vertical Loads:*

10.5.2.1 *Distributed Vertical Load Test*—Apply a force, F, in a direction downward and in line with the barrier. Apply the force 12 in. (300 mm) from the top and evenly distributed over the entire width of the barrier. The test force is given as follows:

$$F\ (\text{lbf}) = 120W \tag{5}$$

where W = the horizontal width of the barrier, ft.

10.5.2.2 No-climb netting or other non-climbable barriers are exempted from this requirement.

11. Maintenance

11.1 This section establishes maintenance and cleaning procedures for soft contained play equipment (SCPE).

11.2 *Maintenance/Hygiene:*

11.2.1 The designer or manufacturer of each play system shall provide to the original owner/operator, maintenance/hygiene instructions.

11.2.1.1 The manufacturer's maintenance instructions shall include recommendations for non-flammable, non-toxic cleaning and sanitizing solutions known to be compatible with materials used in the construction of the play equipment.

11.3 *Manufacturer's Maintenance Instructions:*

11.3.1 Manufacturer's maintenance instructions shall include but not be limited to the following:

11.3.1.1 Description of recommended assembly and disassembly techniques and procedures as deemed necessary by the manufacturer to accomplish repairs and maintenance.

11.3.1.2 Parts and components shall be described and numbered for ordering purposes.

11.3.1.3 Recommended lubrication procedures and frequencies for the soft contained play equipment if applicable.

11.3.1.4 Description of the recommended inspection and maintenance procedures including frequency.

11.3.1.5 Description of recommended wear limits where deemed necessary by the manufacturer.

11.3.1.6 Recommendations for replacement fasteners, torque requirements, and appropriate precautionary information regarding the use of fasteners that have been loosened or retorqued.

11.4 *Manufacturer's Operation Instructions to Owner/Operator:*

11.4.1 The manufacturer's operation instructions shall include but not be limited to the following:

11.4.1.1 Description of the designated, intended use of the soft contained play equipment including the function and operation of its major components.

11.4.1.2 Description of the recommended capacity in either weight or number of persons where applicable.

Downloaded/Printed/Accessed by user: Stephen, Spiegelberg | Date: Mon Apr 28 11:24:33 2025

11.4.1.3 The location of the emergency evacuation points and equipment needed to assist in evacuations (for example, ladders and stepstools) and recommended evacuation procedure.

11.4.1.4 Recommendations for use restrictions relating to environmental conditions where applicable. It is possible that environmental conditions such as extreme temperatures, high winds, or rain may restrict use of some equipment.

11.5 *Owner/Operator's Training Responsibilities*—Based on the manufacturer's recommendations, the owner/operator shall train employees performing the regularly scheduled maintenance of the soft, contained play equipment. This training shall include, but not be limited to, the following:

11.5.1 Training on specific tasks and responsibilities,

11.5.2 Inspection procedures,

11.5.3 Maintenance procedures,

11.5.4 Cleaning and sanitation procedures, and

11.5.5 Emergency evacuation procedures.

11.6 *Protective Surfacing and Use Zone Maintenance:*

11.6.1 The owner/operator shall maintain the protective surfacing within the use zone of soft contained play equipment in accordance with specifications contained in Specification F1292, appropriate for the fall height of each component subject to fall zone surfacing requirements.

11.6.1.1 The owner/operator shall maintain the surfacing within and around the use zones, entrances and exits of the play structure, free from extraneous materials that could cause injury, infection or disease, as well as debris, clothing and footwear.

11.7 *Owner/Operator's Notification Responsibilities:*

11.7.1 The owner/operator of soft, contained play equipment shall promptly notify the manufacturer of any incident, failure, or malfunction which, in their judgement, seriously affects the continued proper operation of the soft, contained play equipment.

11.8 *Access to Inaccessible Areas:*

11.8.1 The owner/operator shall ensure that all gates leading to inaccessible areas are locked at all times.

11.9 *Signage:*

11.9.1 The owner/operator shall ensure that signage is properly displayed showing appropriate ages for the SCPE and the need for adequate supervision of children using the SCPE.

12. Fire Safety

12.1 *Introduction:*

12.1.1 The fire safety requirements of this section apply to soft contained play equipment in an indoor setting.

12.2 *Smoke Detection:*

12.2.1 The building shall be protected by an approved, automatic smoke detection system in accordance with NFPA 101 (Life Safety Code). Actuation of any smoke detection system device shall sound an audible alarm at a constantly attended location on the premises.

12.3 *Exit Signage in the Play Area:*

12.3.1 It is the responsibility of the owner/operator that exit signs and chevron arrows shall be permanently affixed, plainly visible and illuminated upon exiting the equipment. Each exit sign and chevron arrow shall be pointing toward an exit from the building. The exit signs and chevron arrows shall be sized in accordance with the ANSI X535.4 specification and illuminated in accordance with NFPA 101 Life Safety Code.

12.4 *Emergency Lighting:*

12.4.1 It is the responsibility of the owner/operator that each access/egress point of the SCPE shall be illuminated by emergency lighting in accordance with NFPA 101 Life Safety Code. Access/egress to nonuse zones is exempt.

12.5 *Material Specifications:*

12.5.1 *Rigid Materials*—Material used for rigid components (for example, tubes, window, panels, junction boxes, pipes, slides, decks, etc.) shall be tested to UL 94, Test for Flammability of Plastic Materials for Parts, Devices, and Appliances. Results shall be HB (horizontal burn) classification.

12.5.2 *Foam Padding (Excluding Pipe Foam)*—Materials used for foam padding (excluding pipe foam) shall meet the requirements of California Technical Bulletin 117, Section A, Requirements, Test Procedure and Apparatus for Testing the Flame Retardance of Resilient Filling Materials Used in Upholstered Furniture. Foam padding shall be covered by a fabric, coating, or film that meets the specifications of NFPA 701, Flame Resistant Textiles and Films.

12.5.3 *Foam Padding Used for Pipes*—Materials used for pipe foam shall meet the requirements of UL 1975, Fire Tests for Foamed Plastics Used for Decorative Purposes. An 8 ft length of the material used as pipe foam shall be tested. The peak heat release rate shall not exceed 100 kW.

12.5.4 *Ball Pool Balls*—Ball pool balls shall meet the requirements of UL 1975, Fire Tests for Foamed Plastics Used for Decorative Purposes. The minimum specimen test size shall be 36 by 36 in. (910 by 910 mm) by an average of 22 in. (560 mm) deep, and the balls must be held in a box made of chicken wire mesh. The peak heat release rate shall not exceed 100 kW.

12.5.5 *Knitted and Woven Fabrics*—Knitted and woven fabrics, whether coated or uncoated (such as netting, webbing, and fabrics, etc.) shall meet the specifications of NFPA 701 Standard Methods of Fire Test for Flame Resistant Textiles and Films. The fabric shall be tested by Method No. 1 if it weighs 21 oz/yd^2 (700 g/m^2) or under, and by Method No. 2 if it weighs over 21 oz/yd^2 (700 g/m^2).

12.6 *Electrical Devices:*

12.6.1 All electrical devices shall meet applicable local codes.

12.6.2 *Field Assembled Electrical Devices*—Field assembled electrical devices or accessories (for example, lighting, sound generation, video devices, etc.) shall be assembled from UL listed or equivalent components in accordance with the National Electrical Codes (NEC).

12.6.3 *Factory Assembled Electrical Devices*—Factory assembled electrical devices or accessories (for example, lighting, sound generation, video devices, etc.) shall be UL listed or equivalent.

12.6.4 *Electric Supply*—All electric supplies must be positioned outside of the accessible area and not be within reach.

Downloaded/Printed/Accessed by user: Stephen, Spiegelberg | Date: Mon Apr 28 11:24:33 2025

12.7 *Protective Surfacing*—Protective surfacing used in soft contained play equipment shall be rated Class II according to Test Method E648.

13. Evacuation

13.1 *Evacuation Route*—The shortest adjusted exit path length (calculated as the sum of horizontal and vertical travel distances through the SCPE minus half the length of any slides in this path) from any point within the SCPE to the nearest exit or emergency access/egress pathway shall be no more than 40 ft (12 m).

13.2 *Emergency Access/Egress Pathway:*

13.2.1 An emergency access/egress pathway is a clear and unencumbered path which leads directly into or out of the play equipment in a continuous manner.

13.2.2 An emergency access/egress pathway shall have a cross section of not less than 39 in. (990 mm) in width, height, or diameter.

13.3 *Dead Ends:*

13.3.1 Dead ends in which the narrowest cross section is equal to or greater than 39 in. (990 mm) shall have a maximum length of 240 in. (6.1 m), measured along the center line, from the passage entry point to the termination of the dead end. (See Fig. A1.30.)

13.3.2 *Dead Ends with Cross Sections Less Than 39 in. (990 mm):*

13.3.2.1 *Cross Sectional Dimensions:*

(1) No tubular dead end shall have a cross section of less than 23 in. (See Fig. A1.31.)

(2) Rectangular dead ends shall have a minimum horizontal cross section of 23 in. and a minimum vertical cross section of 40 in., except between vertical pipe columns, where the horizontal cross section may be reduced to 20 in. for a running distance of not more than 4 in. (See Fig. A1.32 and Fig. A1.33.)

13.3.2.2 *Dead End Lengths:*

(1) Dead ends with no cross section equal to or greater than 39 in. (that is, with no turnarounds) shall have a maximum length of 72 in., measured along the center line, from the passage entry point to the termination of the dead end. (See Fig. A1.34.)

(2) Dead ends with a turnaround at the termination of the dead end shall have a maximum length of 120 in., measured along the center line, from the passage entry point to the termination of the dead end. A turnaround is an area with minimum dimensions of 39 by 39 by 39 in. or a sphere with a minimum diameter of 39 in. (See Fig. A1.35.)

(3) Dead ends with multiple turnarounds shall have maximum path lengths, measured along the center line, from the passage entry point to the terminations of the dead end, of not more than 120 in. (See Fig. A1.36.)

14. Accessibility

14.1 Soft contained play equipment shall comply with The Americans with Disabilities Act Accessibility Guidelines (ADAAG) for Buildings and Facilities; Play Areas.[2]

15. Keywords

15.1 entanglement; entrapment; fire safety; hazard; maintenance; protrusion; slides; soft contained play equipment

ANNEX

(Mandatory Information)

A1. FIGURES

A1.1 Figs. A1.1-A1.36 are referenced throughout this safety performance specification.

Downloaded/Printed/Accessed by user: Stephen, Spiegelberg | Date: Mon Apr 28 11:24:33 2025

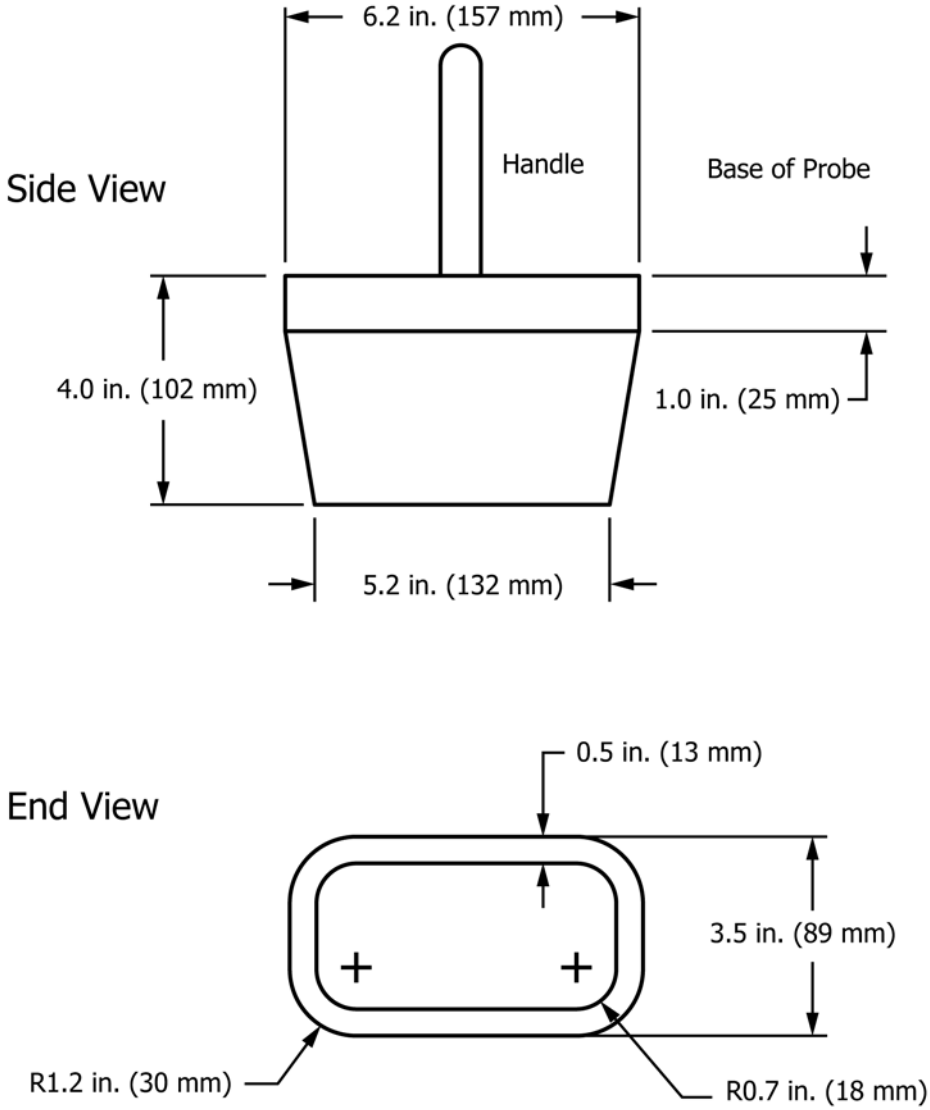

Material: Any Rigid Material

NOTE 1—Material: Any rigid material.

FIG. A1.1 Torso Probe

Reference Sections 6.2.1, 6.2.1.1, 6.2.2, 6.2.2.1

Downloaded/Printed/Accessed by user: Stephen, Spiegelberg | Date: Mon Apr 28 11:24:33 2025

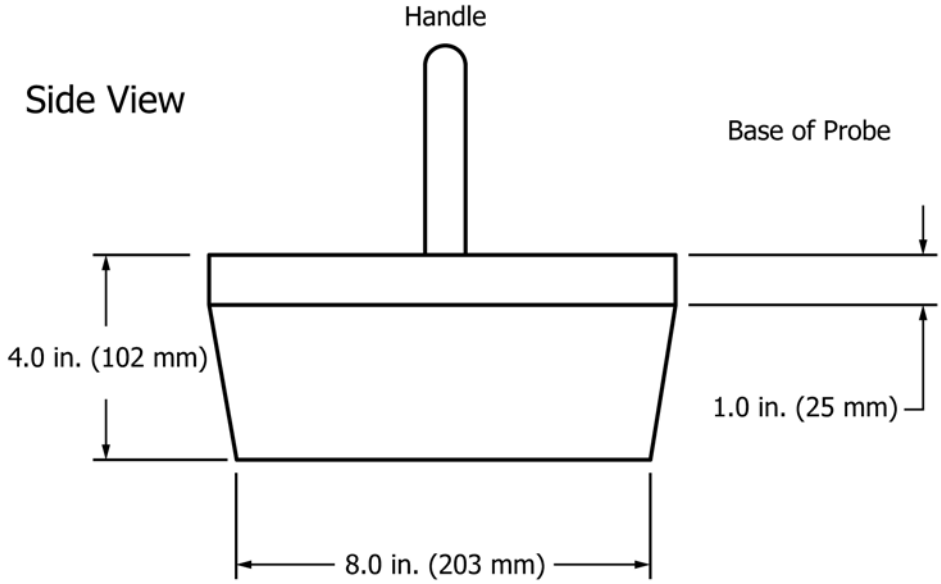

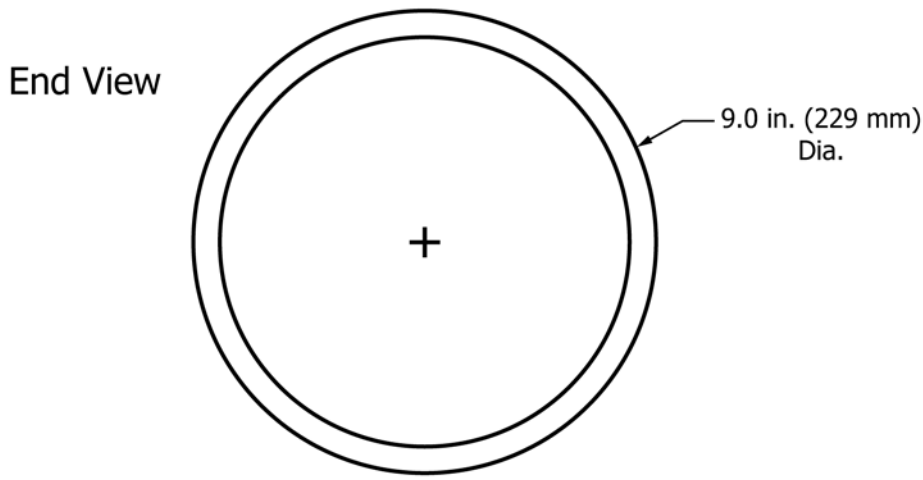

Material: Any Rigid Material

NOTE 1—Material: Any rigid material.

FIG. A1.2 Head Probe

Reference Sections 6.2.1.1, 6.2.2, 6.2.3.1

Downloaded/Printed/Accessed by user: Stephen, Spiegelberg | Date: Mon Apr 28 11:24:33 2025

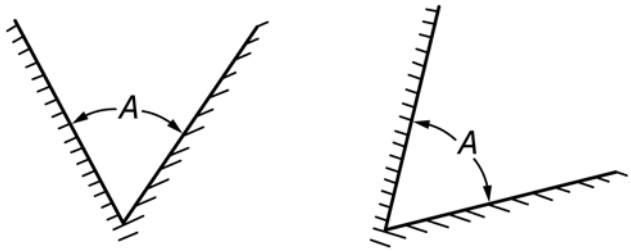

Angle "A" must exceed 55°

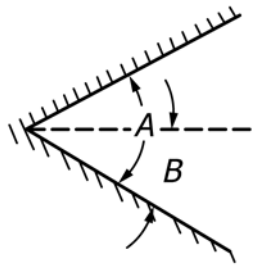

Angle "A" is exempt if the lower leg of Angle "B" is horizontal or below horizontal.

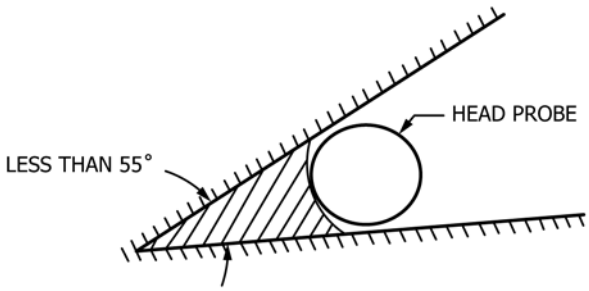

Filled Apex Illustration of shield for angles

FIG. A1.3 Recommendations for Angles
Reference Section 6.2.3.1

Downloaded/Printed/Accessed by user: Stephen, Spiegelberg | Date: Mon Apr 28 11:24:33 2025

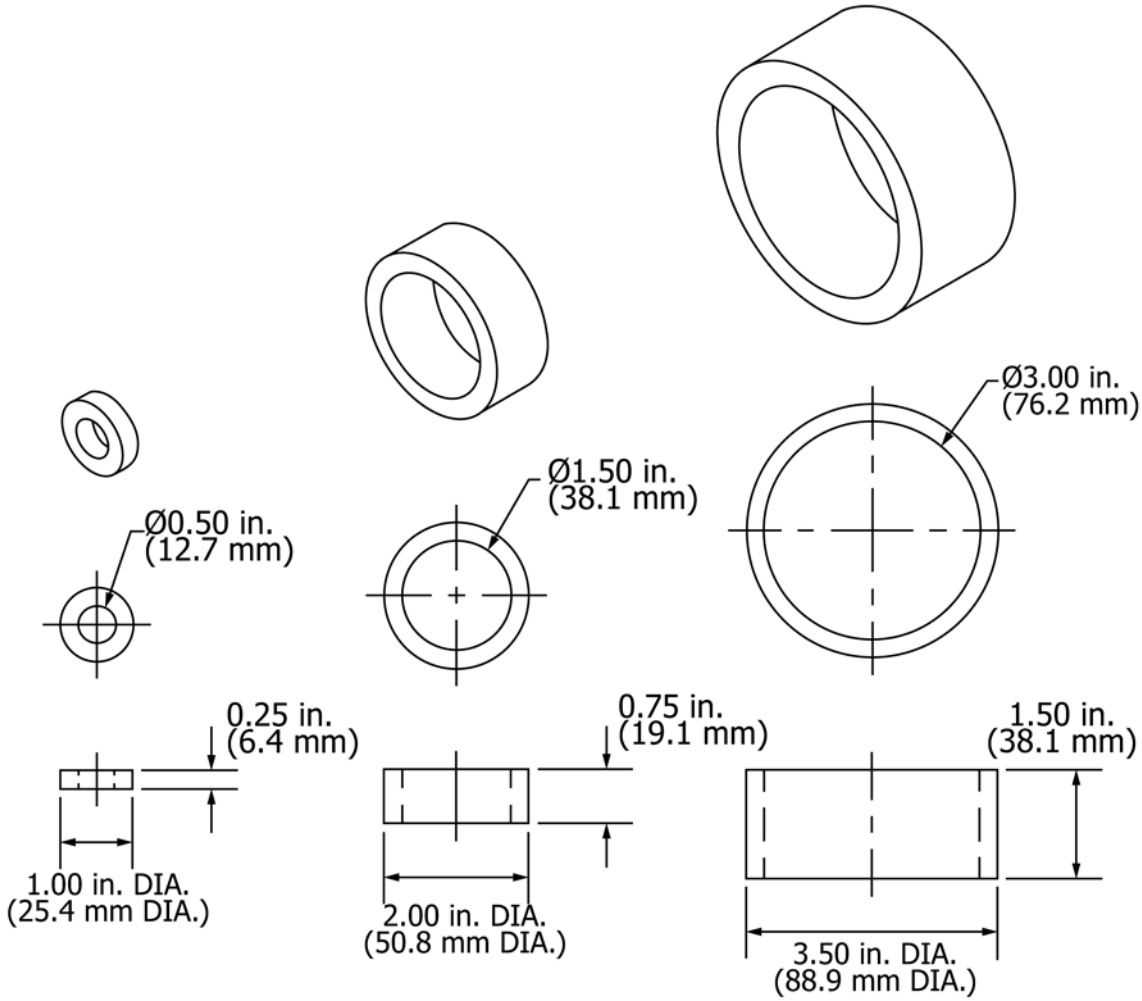

FIG. A1.4 Protrusion Test Gauges
Reference Sections 6.4, 6.4.2, 6.5.1.1, 6.5.2.1, 6.5.3, 6.5.4

Downloaded/Printed/Accessed by user: Stephen, Spiegelberg | Date: Mon Apr 28 11:24:33 2025

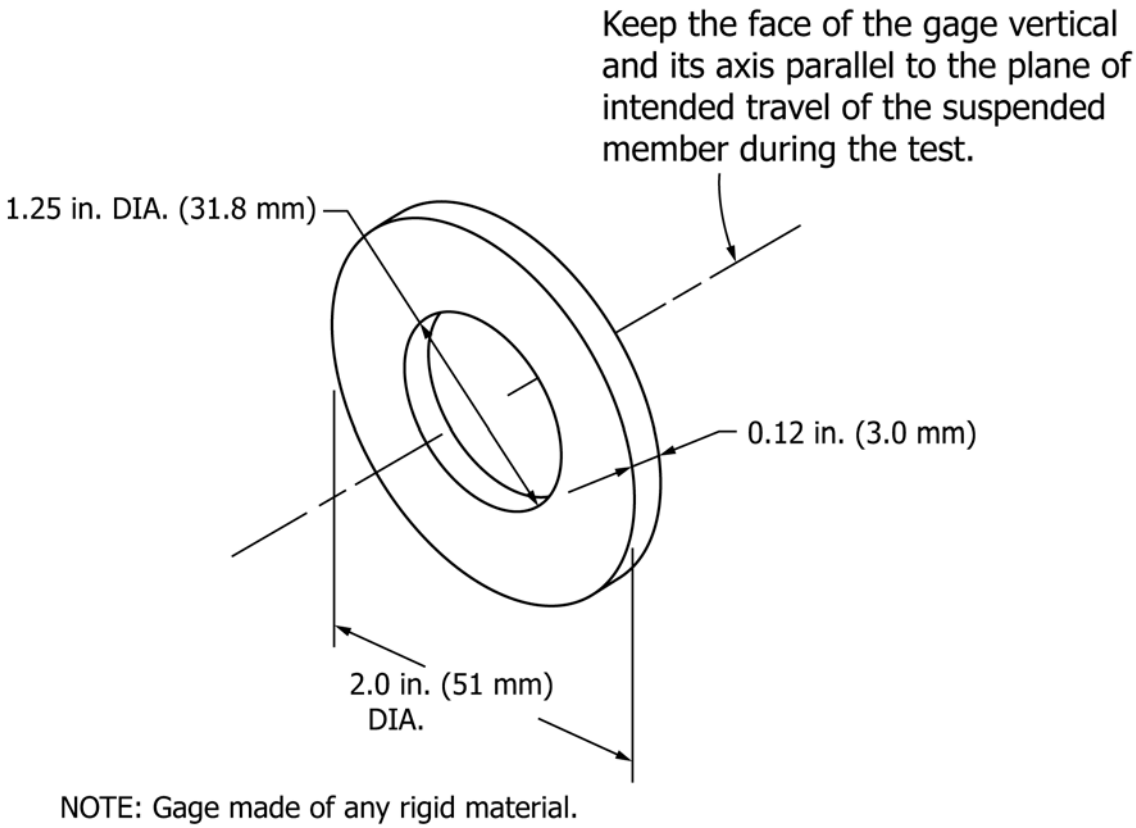

FIG. A1.5 Protrusion Test Gauge for Suspended Members
Reference Sections 6.4, 6.4.3

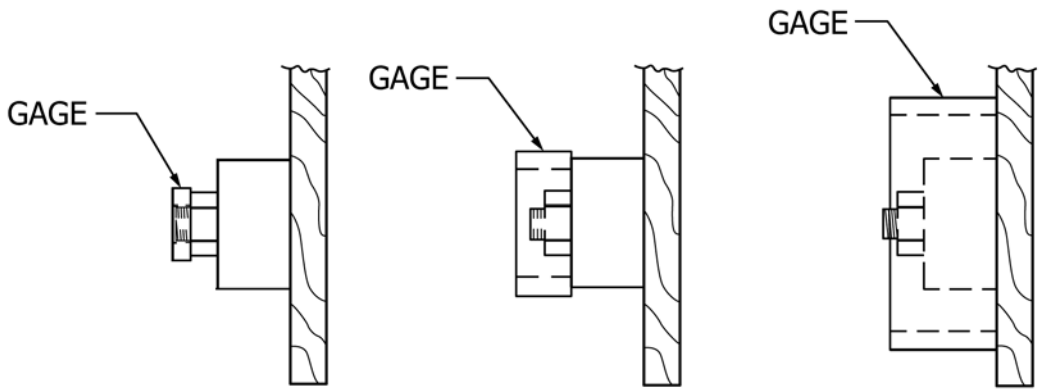

FIG. A1.6 Compound Protrusion Test
Reference Section 6.4.2

Downloaded/Printed/Accessed by user: Stephen, Spiegelberg | Date: Mon Apr 28 11:24:33 2025

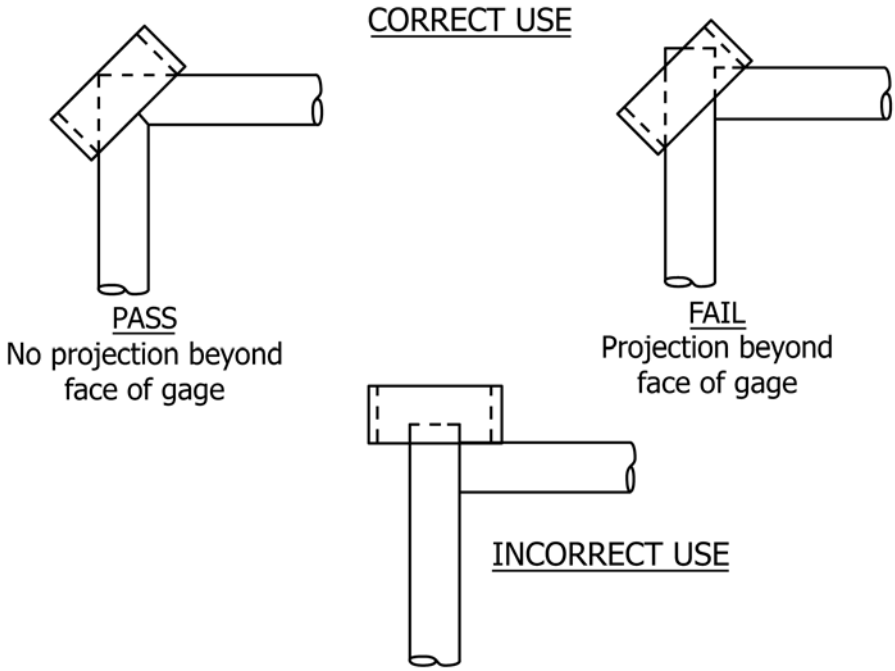

FIG. A1.7 Use of Protrusion Gauges
Reference Section 6.4.2

Downloaded/Printed/Accessed by user: Stephen, Spiegelberg | Date: Mon Apr 28 11:24:33 2025

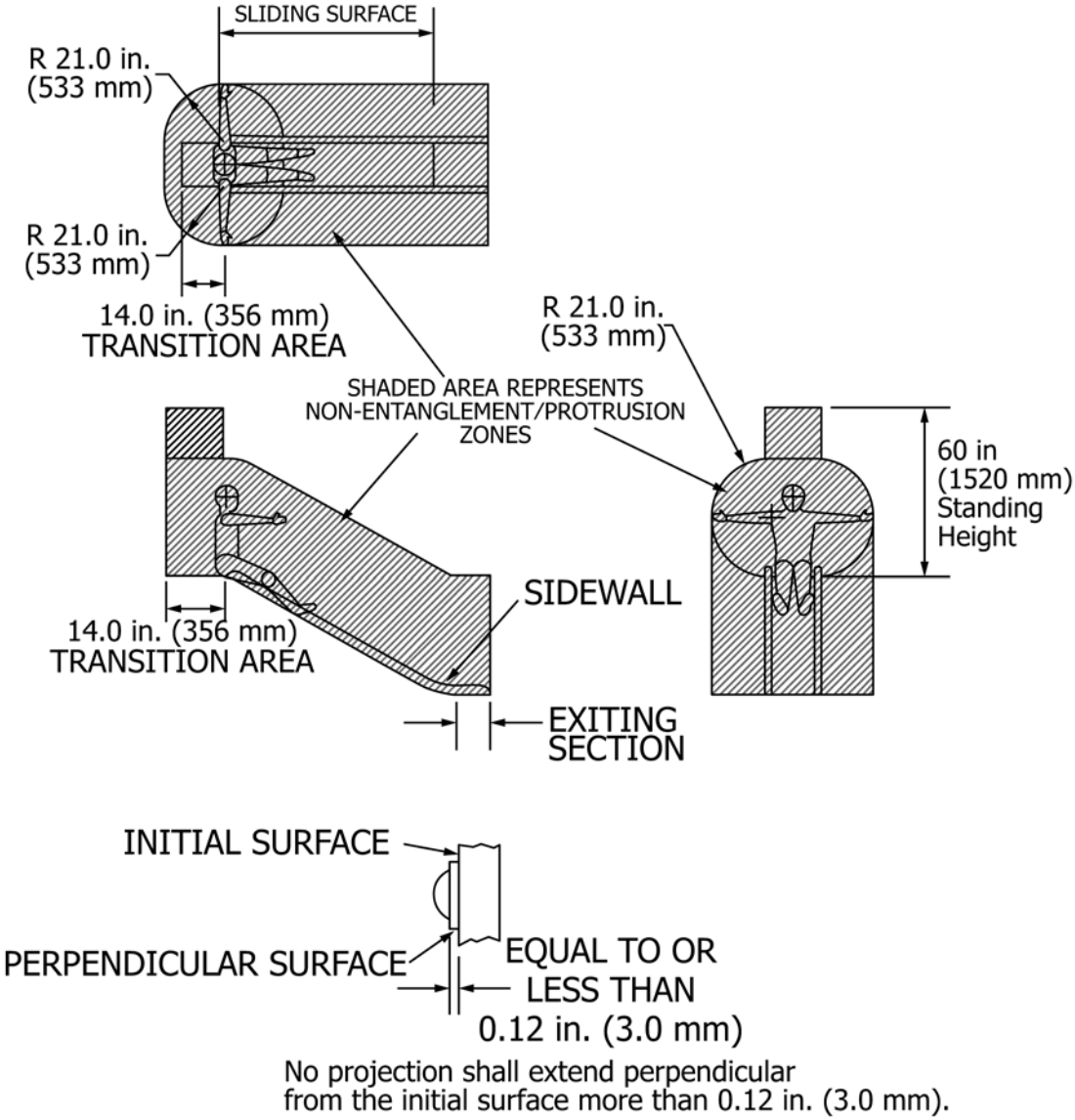

FIG. A1.8 Area Subject to the Requirements of Section 6.5.1
Reference Section 6.5.1

Downloaded/Printed/Accessed by user: Stephen, Spiegelberg | Date: Mon Apr 28 11:24:33 2025

1.

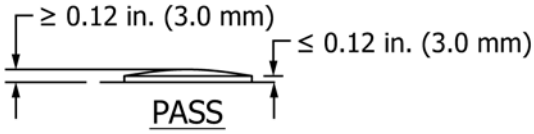

Fits within one of the (3) protrusion gages. Projects upwards from a horizontal plane - perpendicular projection is ≤0.12 in. (3.0 mm), curved upper surface does not project perpendicular to the plane of the initial surface.

2.

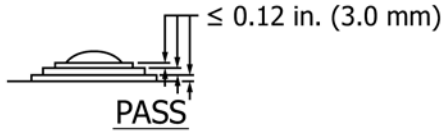

Fits within one of the (3) protrusion gages. Each of three surfaces project upwards from a horizontal plane ≤ 0.12 in. (3.0 mm) - O.K. Rivet head has the same characteristics as in 1, therefore it passes the entanglement test for projections from a horizontal plane.

3.

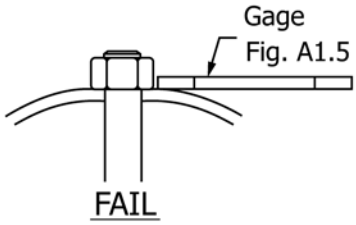

Fits within one of the (3) protrusion gages. Passes bolt end projection test - ≤ 2 threads exposed. Fails entanglement test - projection upwards from a horizontal plane perpendicular to plane of initial surface > 0.12 in (3.0 mm).

4.

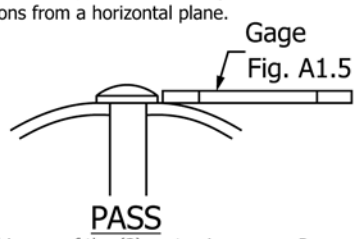

Fits within one of the (3) protrusion gages. Passes entanglement test - projection from a horizontal plane - for same reasons shown in 1.

5. Fits within one of the (3) protrusion gages. Projects upwards above a horizontal plane - passes for same reasons as shown in 1.

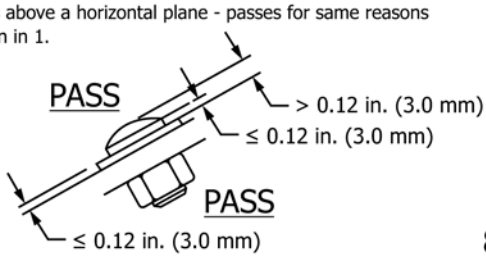

Passes bolt end projection test - ≤ 2 threads exposed. Projects downward below horizontal plane - not subject to entanglement requirement of projecting above a horizontal plane.

6.

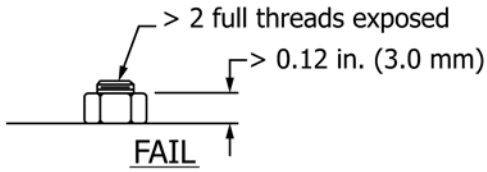

Fits within one of the (3) protrusion gages. Fails (2) entanglement tests - Projects upwards from a horizontal plane perpendicular to plane of initial surface > 0.12 in (3.0 mm) and fails exposed bolt end projection > 2 full threads.

7.

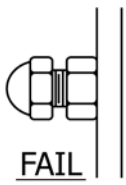

Fails entanglement test - projection fits within on of the three gages and increases in size from initial surface to outer end.

8. Projections above a horizontal plane must pass the three gage test plus have no protrusions greater than 0.12 in (3.0 mm).

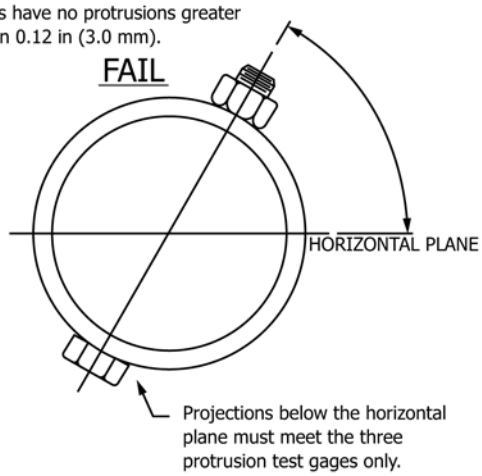

FIG. A1.9 Entanglement Test Requirement Examples
Reference Section 6.5.2.2, 6.5.2.3, 6.5.4

Downloaded/Printed/Accessed by user: Stephen, Spiegelberg | Date: Mon Apr 28 11:24:33 2025

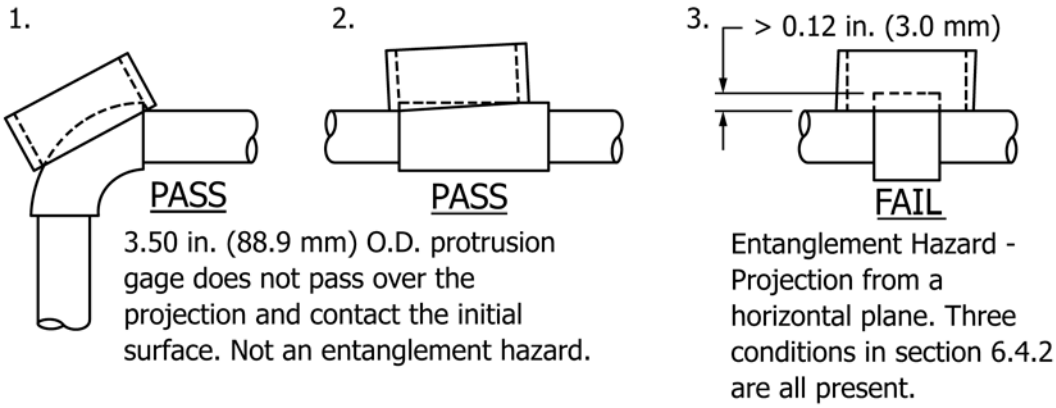

FIG. A1.10 Entanglement Test Requirement Examples
Reference Section 6.5.2.2, 6.5.2.3

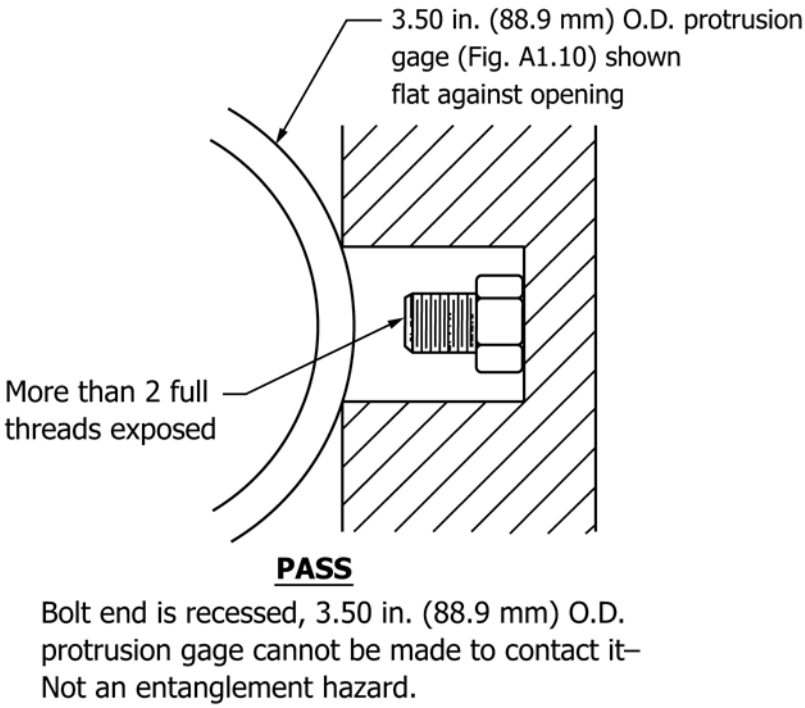

FIG. A1.11 Entanglement Test Requirement Examples
Reference Section 6.5.3

Downloaded/Printed/Accessed by user: Stephen, Spiegelberg | Date: Mon Apr 28 11:24:33 2025

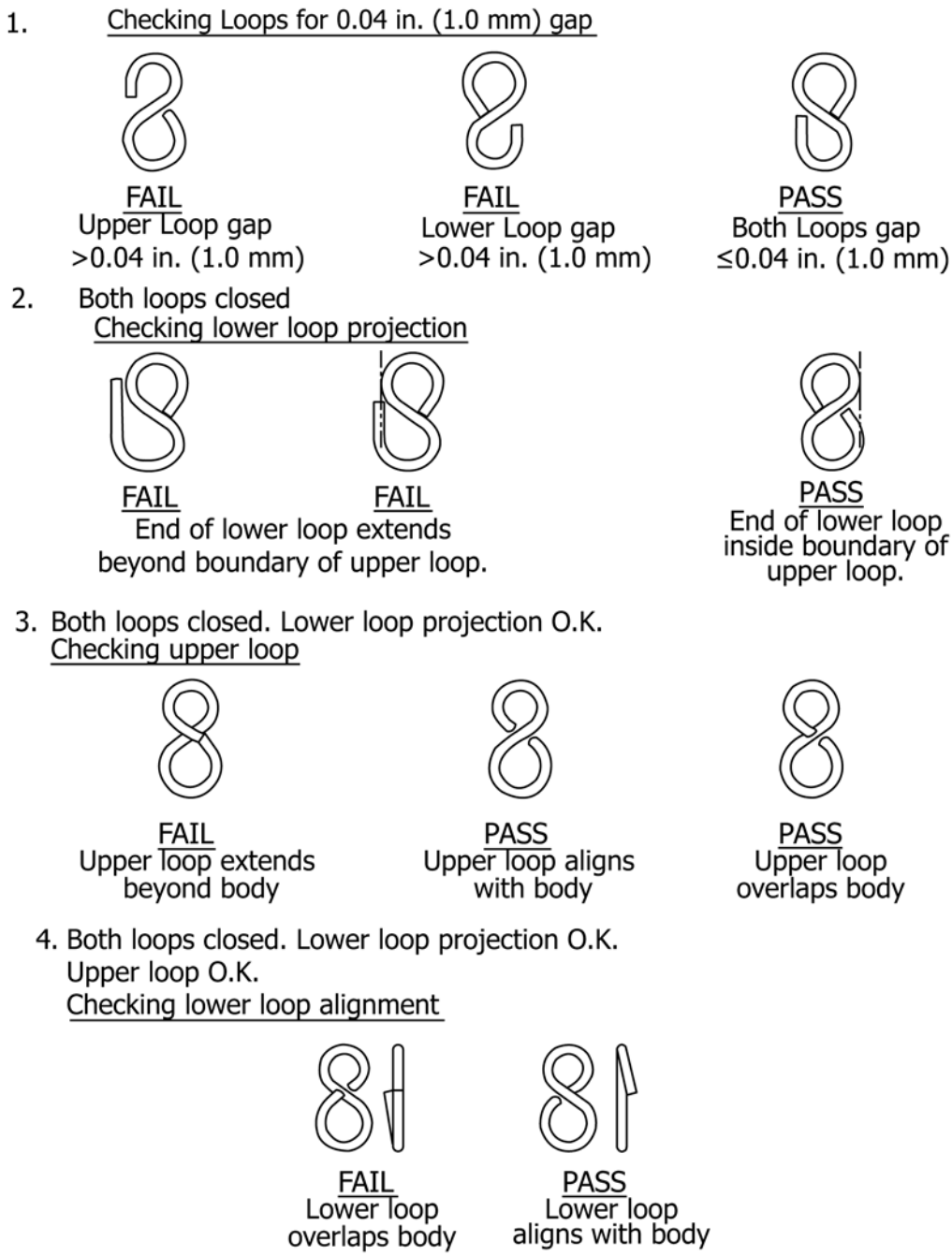

FIG. A1.12 Requirements for Fastening Devices
Reference Sections 6.5.5, 6.5.5.1

Downloaded/Printed/Accessed by user: Stephen, Spiegelberg | Date: Mon Apr 28 11:24:33 2025

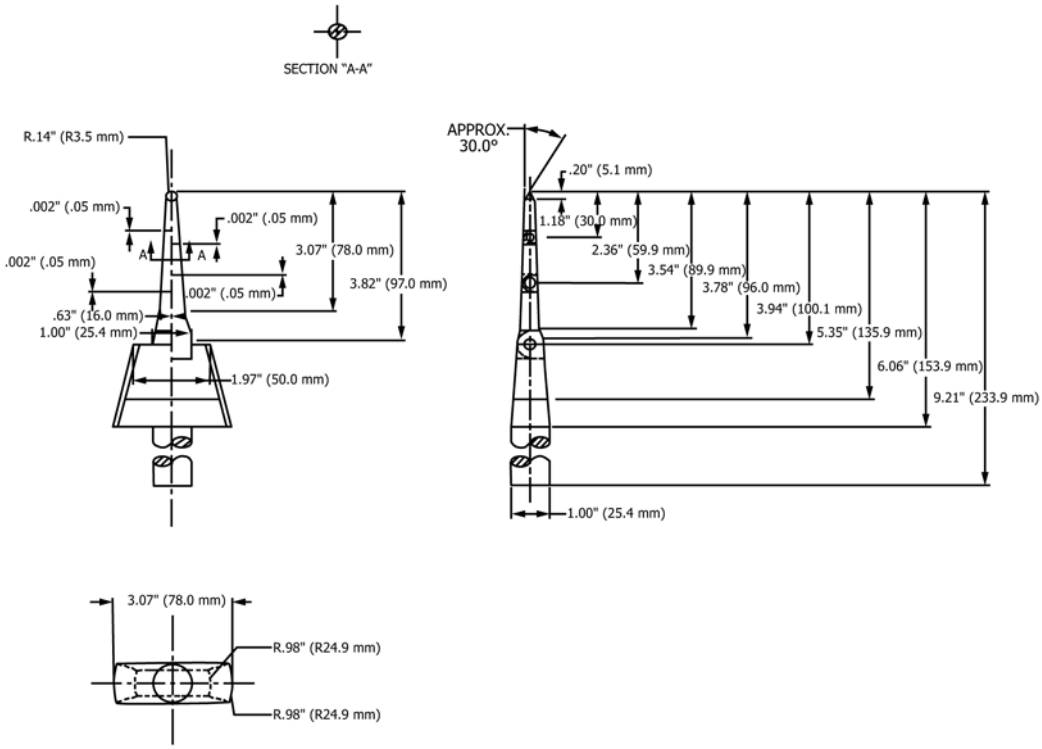

FIG. A1.13 Finger Probe
Reference Section 6.6.1.1

Downloaded/Printed/Accessed by user: Stephen, Spiegelberg | Date: Mon Apr 28 11:24:33 2025

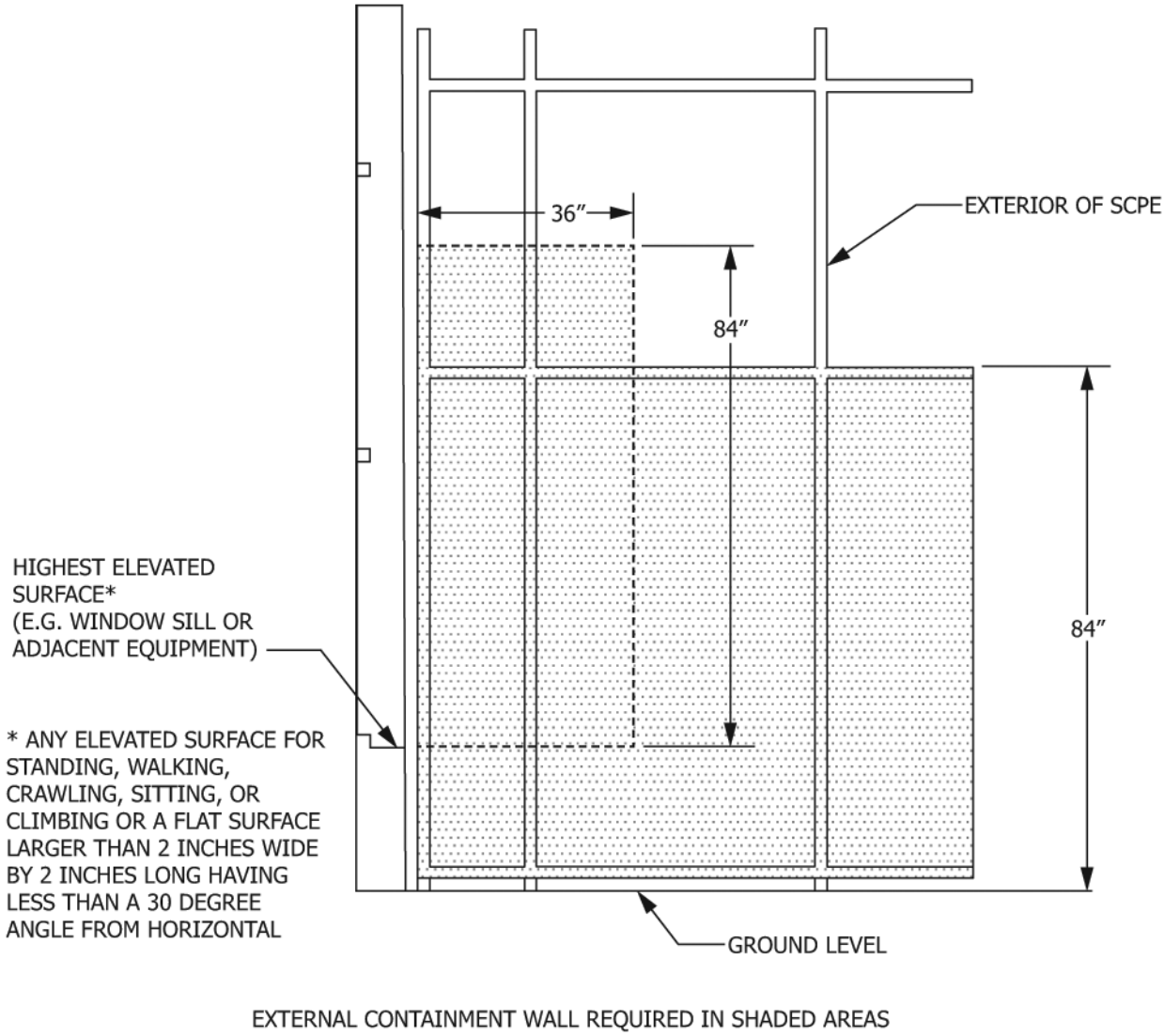

FIG. A1.14 Accessible External Portion of the SCPE
Reference Section 8.1.6.1 *(1)*

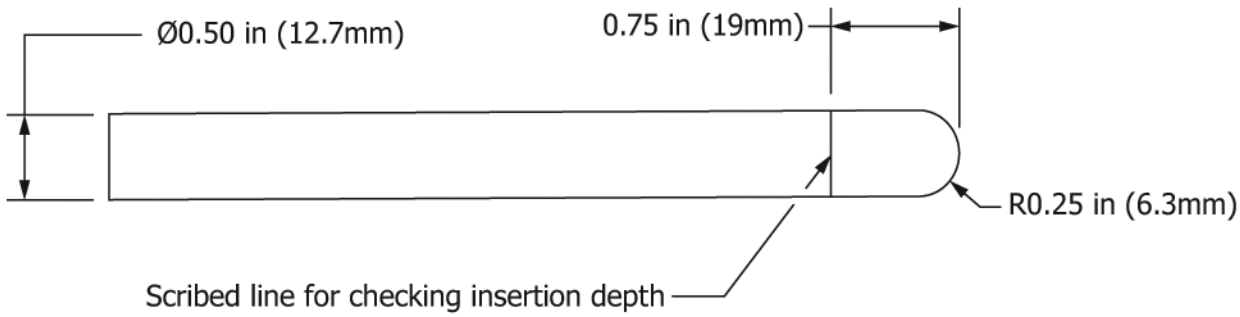

FIG. A1.15 0.50-in. Diameter Test Probe
Reference Section 8.1.6.1 *(2)*

Downloaded/Printed/Accessed by user: Stephen, Spiegelberg | Date: Mon Apr 28 11:24:33 2025

Pipe Cover Diagram

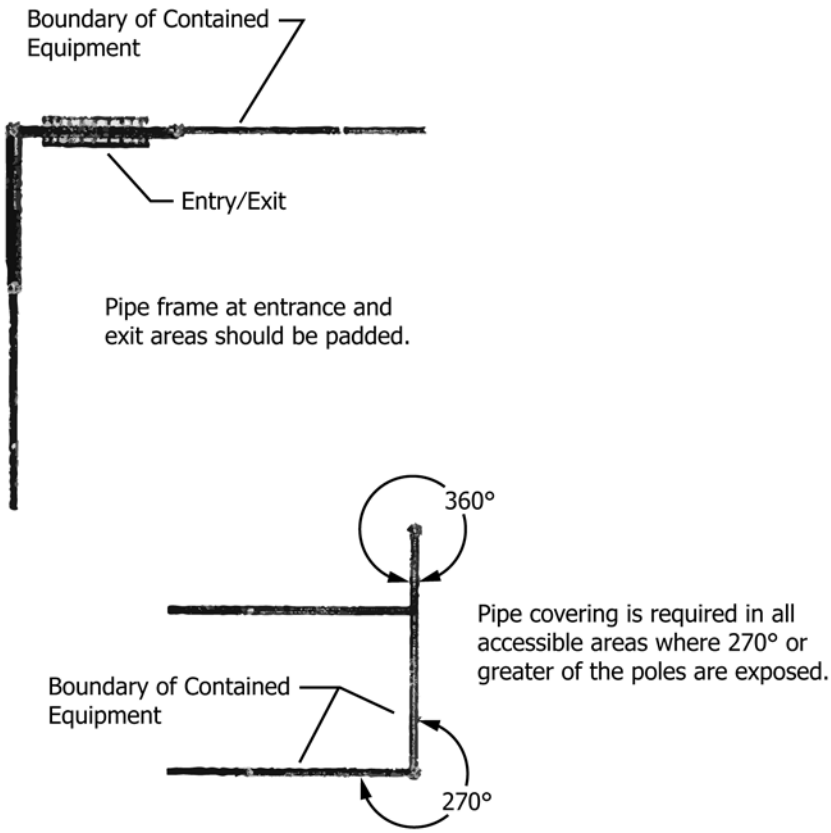

FIG. A1.16 Pipe Cover Diagram
Reference Section 8.1.7.1

Downloaded/Printed/Accessed by user: Stephen, Spiegelberg | Date: Mon Apr 28 11:24:33 2025

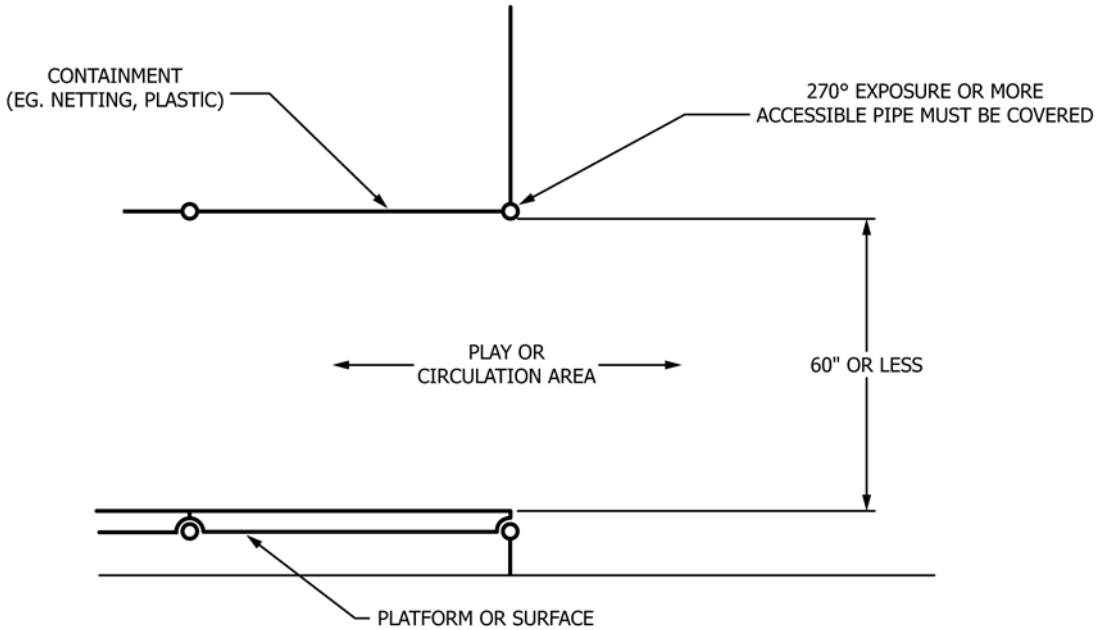

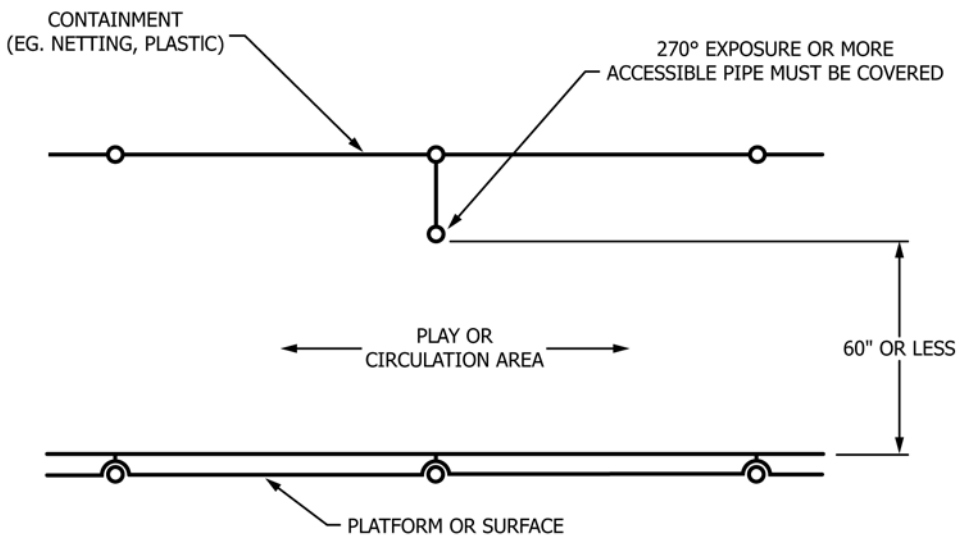

FIG. A1.17 Elevation View
Reference Section 8.1.7.2 *(1)*

Downloaded/Printed/Accessed by user: Stephen, Spiegelberg | Date: Mon Apr 28 11:24:33 2025

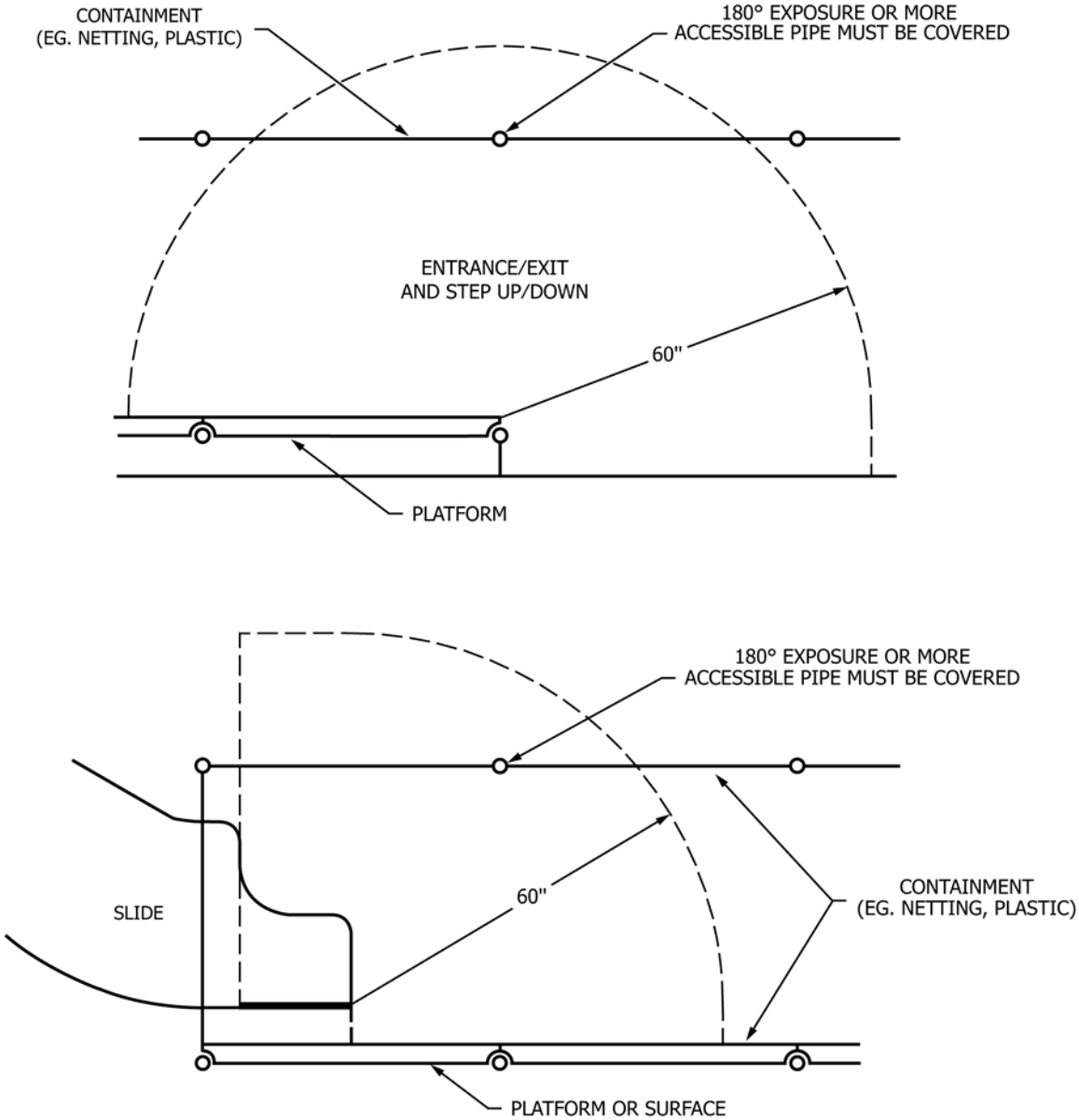

FIG. A1.18 Elevation View
Reference Section 8.1.7.2 *(2)*

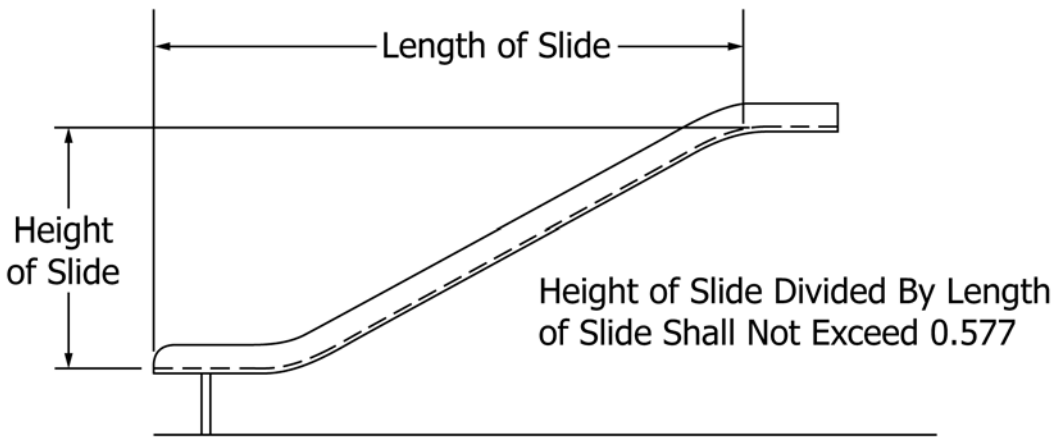

FIG. A1.19 Height/Length Ration of Sliding Surfaces
Reference Section 8.5.3

Downloaded/Printed/Accessed by user: Stephen, Spiegelberg | Date: Mon Apr 28 11:24:33 2025

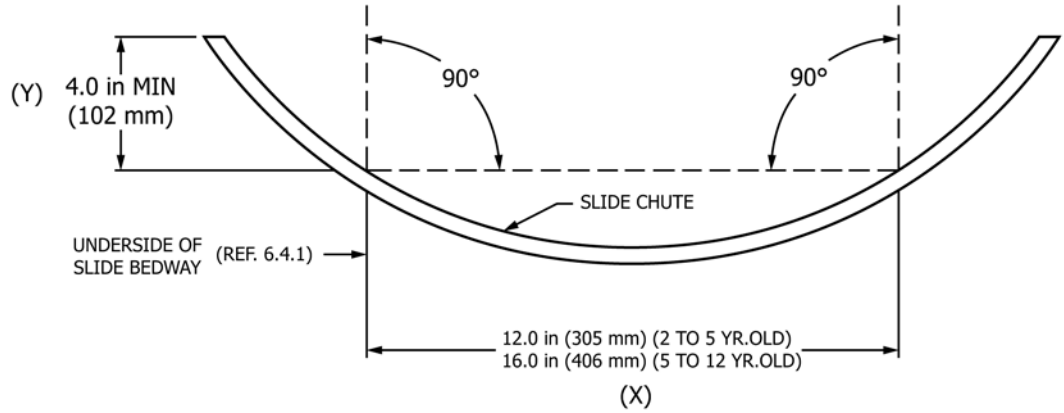

FIG. A1.20 Formula for Minimum Vertical Sidewall Height
Reference Section 8.5.7

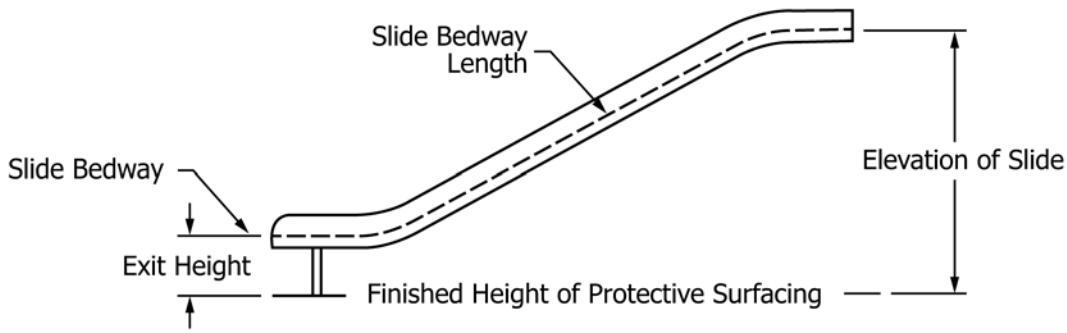

NOTE 1—If elevation is >48 in. (1220 mm) exit height shall be between 7 in. (180 mm) and 15 in. (380 mm). If elevation is ≤48 in. (1220 mm) exit height shall be 11 in. (280 mm) maximum. Reference Section 8.5.11.1.

NOTE 2—Slide bedway length, for structural integrity purposes only, is denoted by the dashed line. Reference Section 10.4.2.2.

FIG. A1.21 Height of Slide Exit Region and Slide Bedway Length
Reference Section 8.5.11.1

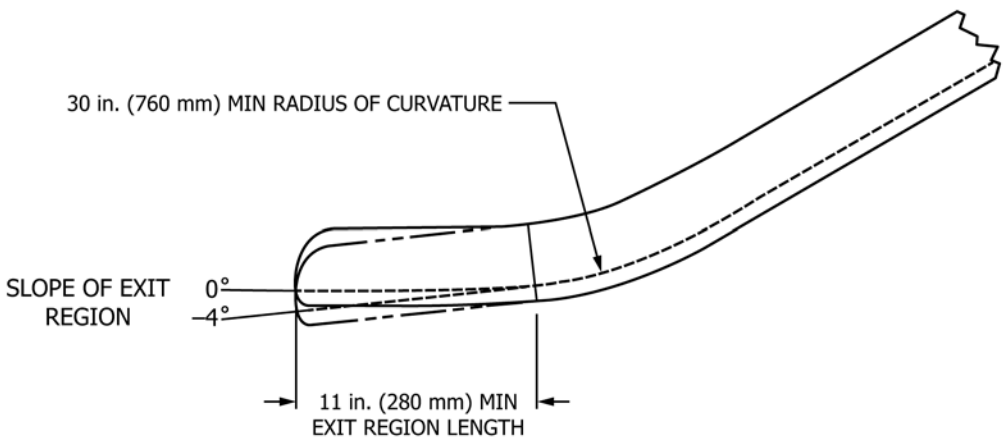

FIG. A1.22 Slide Exit Requirements
Sections 8.5.11.2, 8.5.11.3, 8.5.11.4

Downloaded/Printed/Accessed by user: Stephen, Spiegelberg | Date: Mon Apr 28 11:24:33 2025

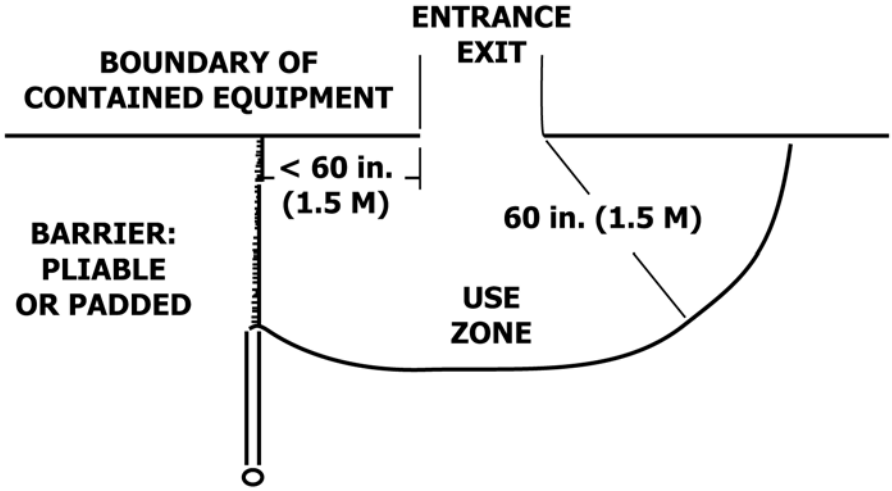

FIG. A1.23 Use Zone
Reference Section 9.2.3

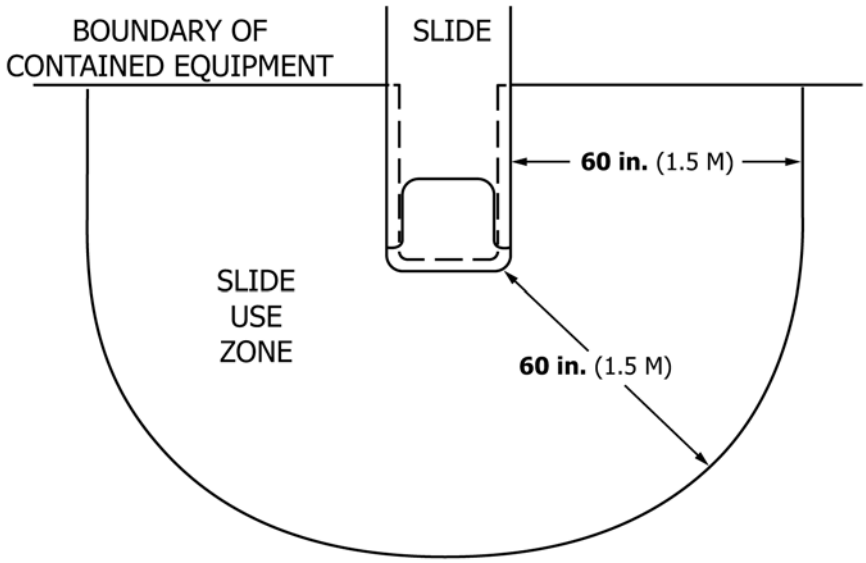

FIG. A1.24 Enclosed Slide Use Zone
Reference Section 9.3.3.1 (1)

Downloaded/Printed/Accessed by user: Stephen, Spiegelberg | Date: Mon Apr 28 11:24:33 2025

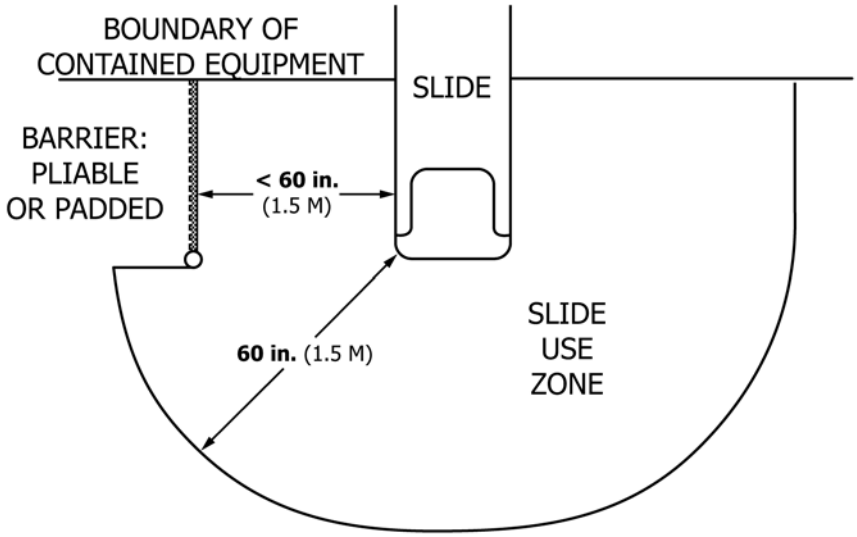

FIG. A1.25 Enclosed Slide Use Zone
Reference Section 9.3.3.1 (2)

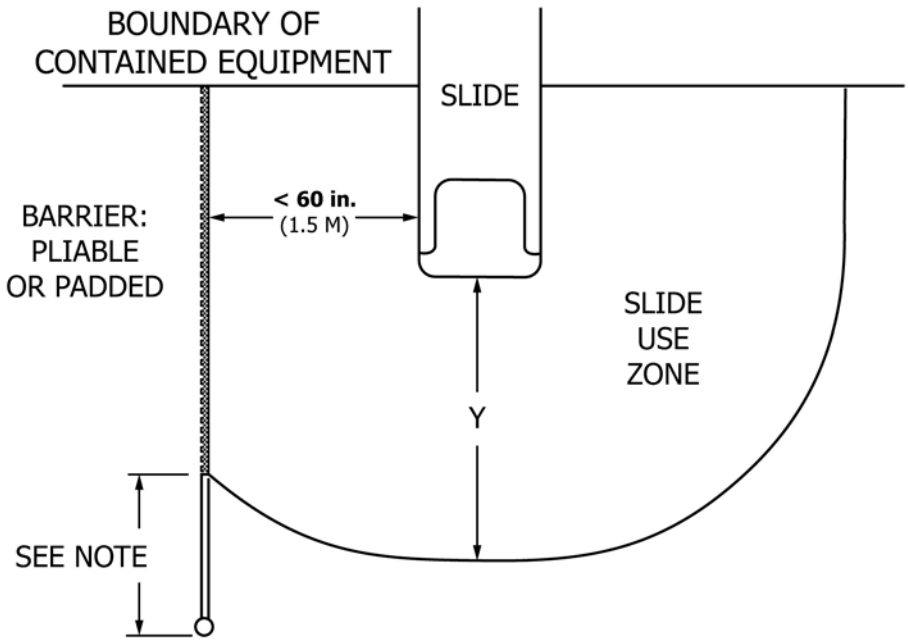

NOTE 1—Need not be pliable or padded except as required by 8.1.7.

FIG. A1.26 Enclosed Slide Use Zone
Reference Section 9.3.3.1 (2)

Downloaded/Printed/Accessed by user: Stephen, Spiegelberg | Date: Mon Apr 28 11:24:33 2025

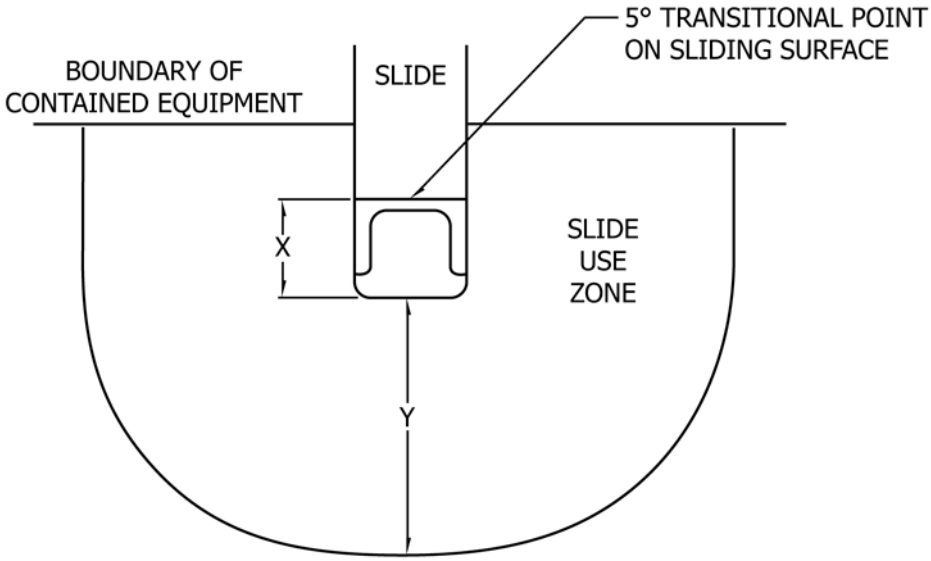

NOTE 1—If x ≥ 36 in., then y ≥ 60 in. If x < 36 in., then y ≥ 72 in.

FIG. A1.27 Enclosed Slide Use Zone
Reference Sections 9.3.3.2 (1), 9.3.3.2 (2)

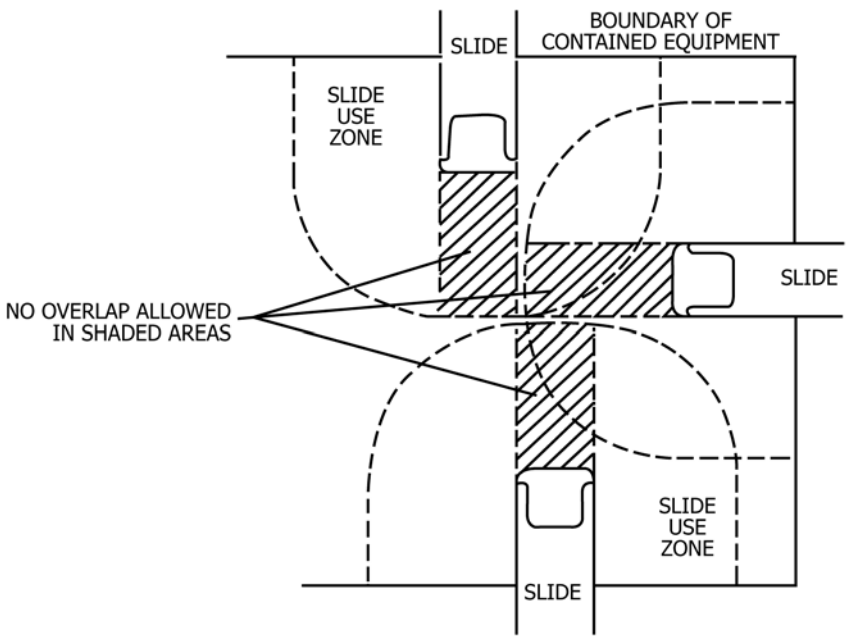

FIG. A1.28 Enclosed Slide Use Zone
Reference Section 9.3.5

Downloaded/Printed/Accessed by user: Stephen, Spiegelberg | Date: Mon Apr 28 11:24:33 2025

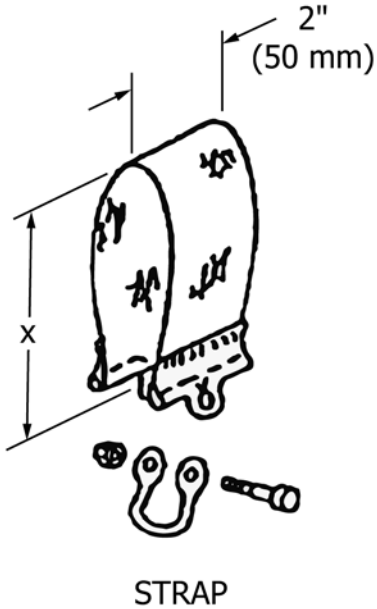

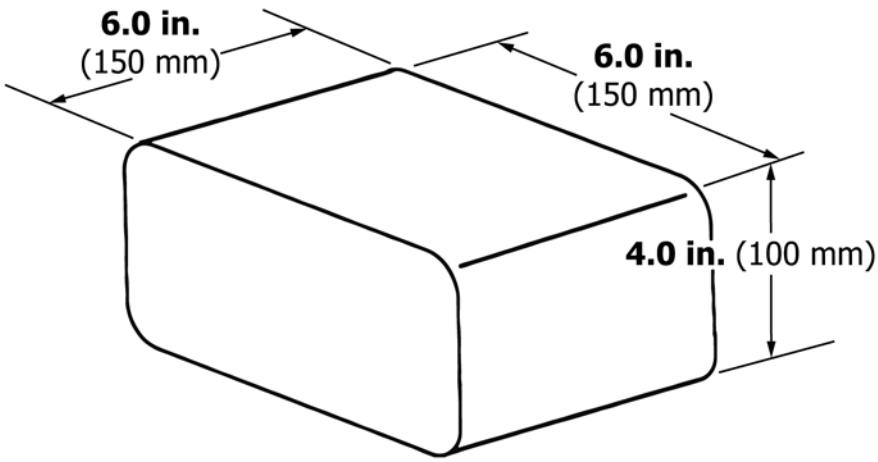

FIG. A1.29 Load Distribution Devices
Reference Section 10.3.1

Downloaded/Printed/Accessed by user: Stephen, Spiegelberg | Date: Mon Apr 28 11:24:33 2025

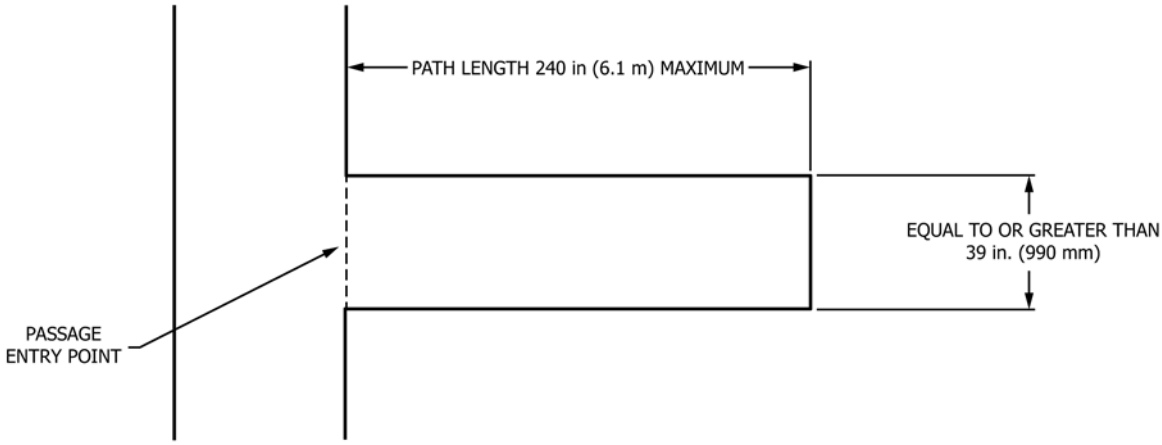

FIG. A1.30 Dead End Cross Section Equal to or Greater Than 39 in. (990 mm)
Reference Section 13.3.1

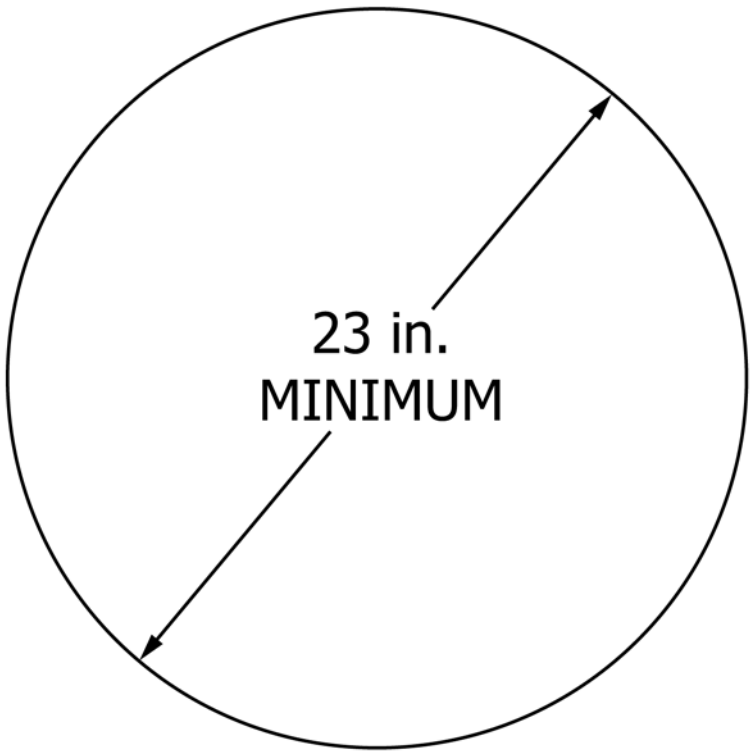

FIG. A1.31 Tubular Dead End Cross Section Elevation View
Reference Section 13.3.2.1*(1)*

Downloaded/Printed/Accessed by user: Stephen, Spiegelberg | Date: Mon Apr 28 11:24:33 2025

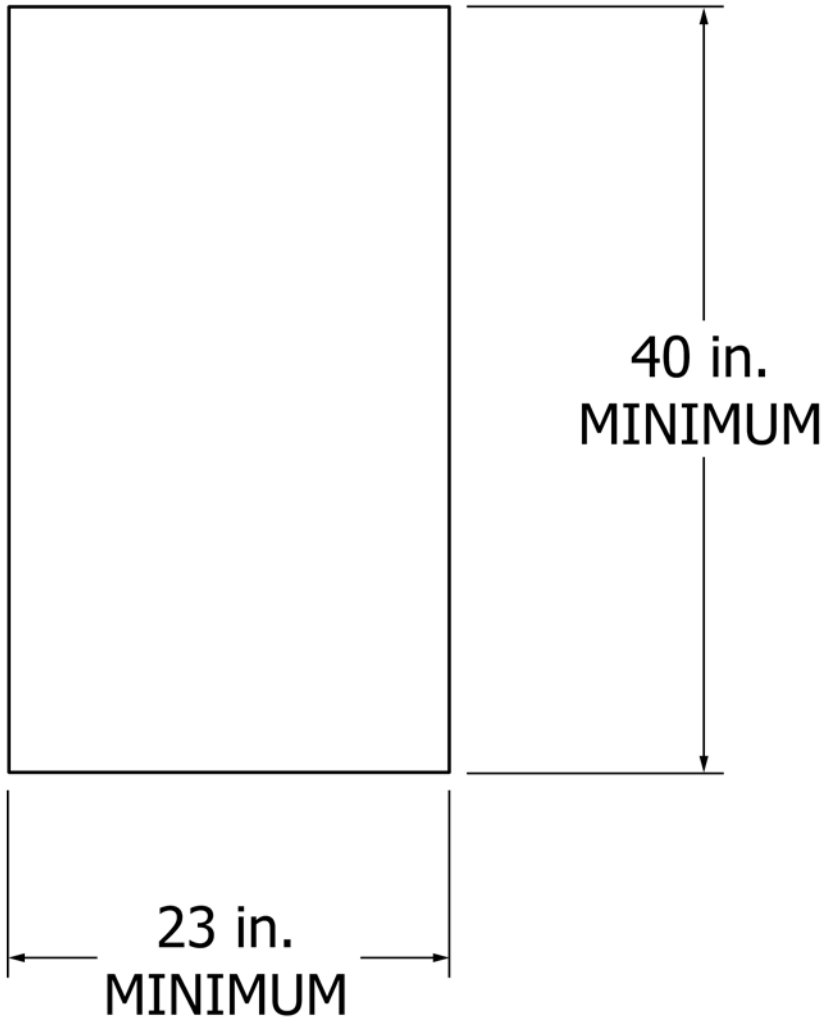

FIG. A1.32 Rectangular Dead End Cross Section Elevation View
Reference Section 13.3.2.1 *(2)*

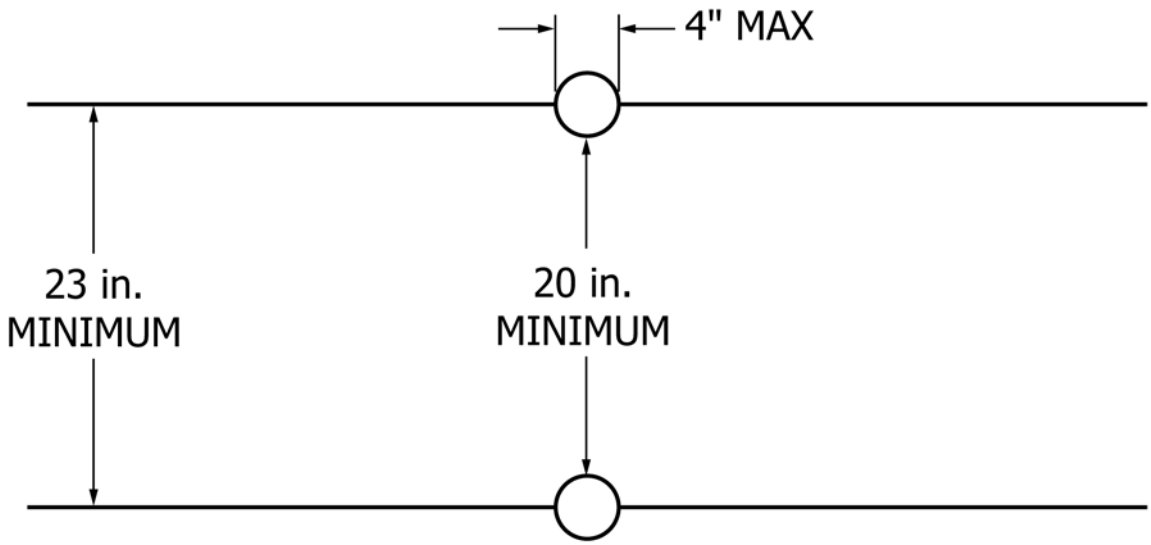

FIG. A1.33 Rectangular Dead End With Vertical Support Columns Overhead View
Reference Section 13.3.2.1 *(2)*

Downloaded/Printed/Accessed by user: Stephen, Spiegelberg | Date: Mon Apr 28 11:24:33 2025

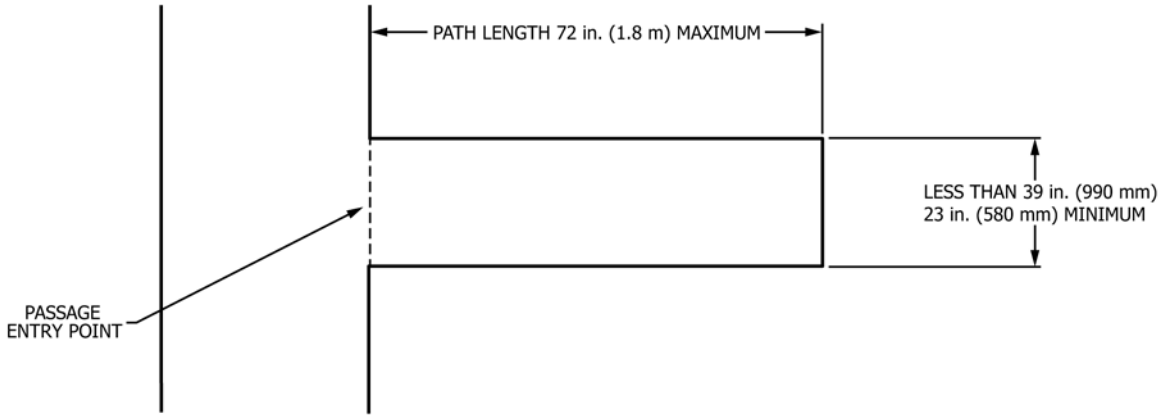

FIG. A1.34 Dead Ends With Less Than 39 in. (990 mm) Cross Section Without Turnaround Overhead View Reference Section 13.3.2.2 *(1)*

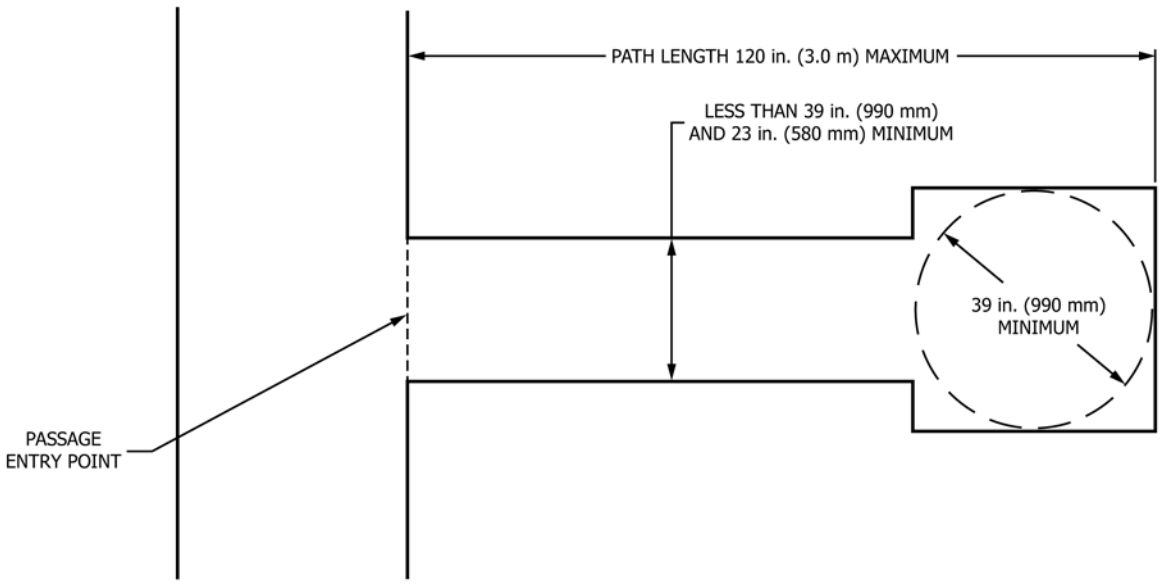

FIG. A1.35 Dead Ends With Less Than 39 in. (990 mm) Cross Section With Turnaround Overhead View Reference Section 13.3.2.2 *(2)*

Downloaded/Printed/Accessed by user: Stephen, Spiegelberg | Date: Mon Apr 28 11:24:33 2025

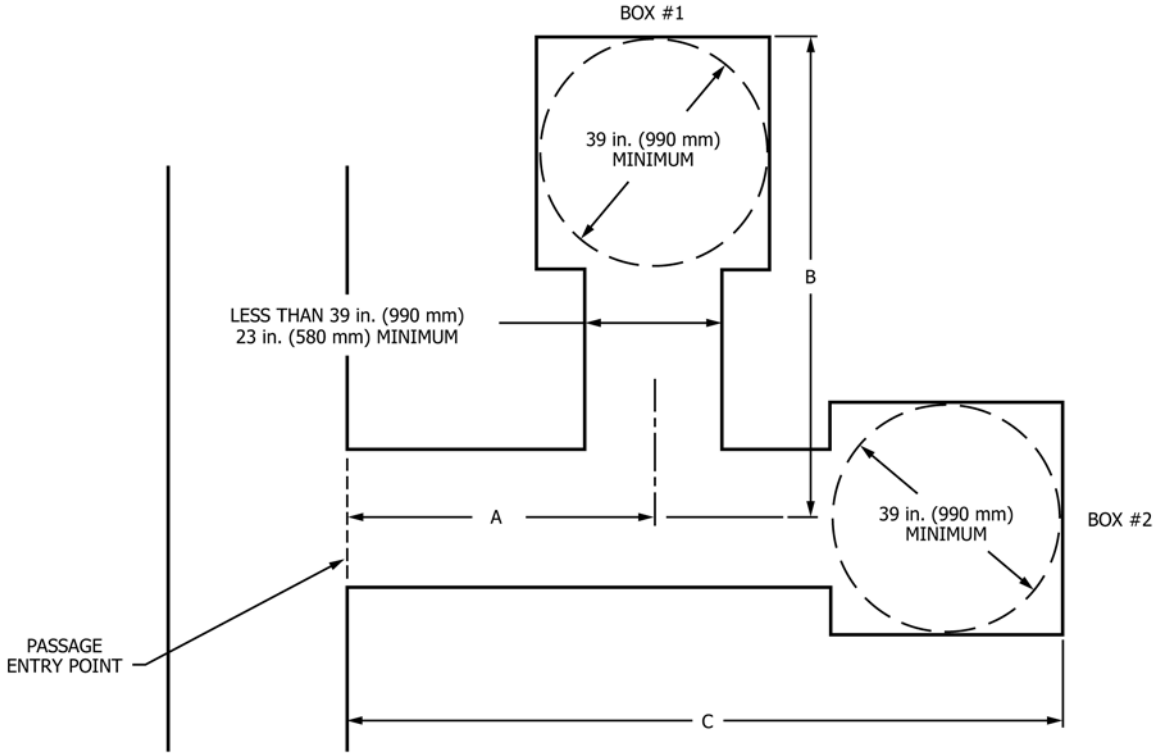

Path length shall be 120 in. (3.0 m) maximum
Example: Path length to Box #1 = A+B≤120 in. (3.0 m)
Example: Path length to Box #2 = C≤120 in. (3.0 m)

FIG. A1.36 Dead Ends with Less Than 39 in. (990 mm) Cross Section with Multiple Turnarounds Reference Section 13.3.2.2*(3)*

ASTM International takes no position respecting the validity of any patent rights asserted in connection with any item mentioned in this standard. Users of this standard are expressly advised that determination of the validity of any such patent rights, and the risk of infringement of such rights, are entirely their own responsibility.

This standard is subject to revision at any time by the responsible technical committee and must be reviewed every five years and if not revised, either reapproved or withdrawn. Your comments are invited either for revision of this standard or for additional standards and should be addressed to ASTM International Headquarters. Your comments will receive careful consideration at a meeting of the responsible technical committee, which you may attend. If you feel that your comments have not received a fair hearing you should make your views known to the ASTM Committee on Standards, at the address shown below.

This standard is copyrighted by ASTM International, 100 Barr Harbor Drive, PO Box C700, West Conshohocken, PA 19428-2959, United States. Individual reprints (single or multiple copies) of this standard may be obtained by contacting ASTM at the above address or at 610-832-9585 (phone), 610-832-9555 (fax), or service@astm.org (e-mail); or through the ASTM website (www.astm.org). Permission rights to photocopy the standard may also be secured from the Copyright Clearance Center, 222 Rosewood Drive, Danvers, MA 01923, Tel: (978) 646-2600; http://www.copyright.com/

Downloaded/Printed/Accessed by user: Stephen, Spiegelberg | Date: Mon Apr 28 11:24:33 2025