US 20140352968A1

(19) United States
(12) Patent Application Publication
Pitcher et al.
(10) Pub. No.: US 2014/0352968 A1
(43) Pub. Date: Dec. 4, 2014

(54) **MULTI-WELL SIMULTANEOUS FRACTURING SYSTEM**

(71) Applicant: **Cameron International Corporation**, Houston, TX (US)

(72) Inventors: **Jason L. Pitcher**, The Woodlands, TX (US); **Edward L. Ganzinotti, III**, Houston, TX (US); **Jay P. Painter**, Webster, TX (US)

(21) Appl. No.: **13/908,869**

(22) Filed: **Jun. 3, 2013**

Publication Classification

(51) **Int. Cl.**
E21B 43/12 (2006.01)

(52) **U.S. Cl.**
CPC *E21B 43/12* (2013.01)
USPC **166/308.1**; 166/67

(57) **ABSTRACT**

A system for simultaneously fracturing multiple wells is provided. In one embodiment, the system includes fracturing trees installed at multiple wells. A fracturing manifold is connected to the fracturing trees and includes output valves to independently control flow of fracturing fluid from the manifold to each of multiple wells. The system may also include a controller connected to the output valves so that the controller can remotely operate the output valves to simultaneously fracture the multiple wells and independently control the volume of fracturing fluid entering each of the wells from the fracturing manifold. Additional systems, devices, and methods are also disclosed.

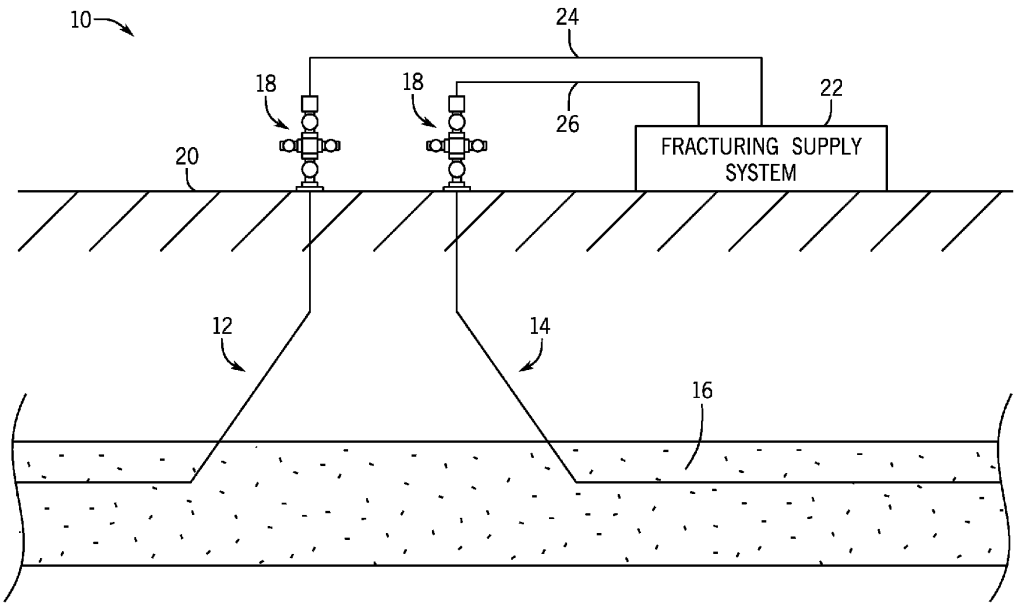

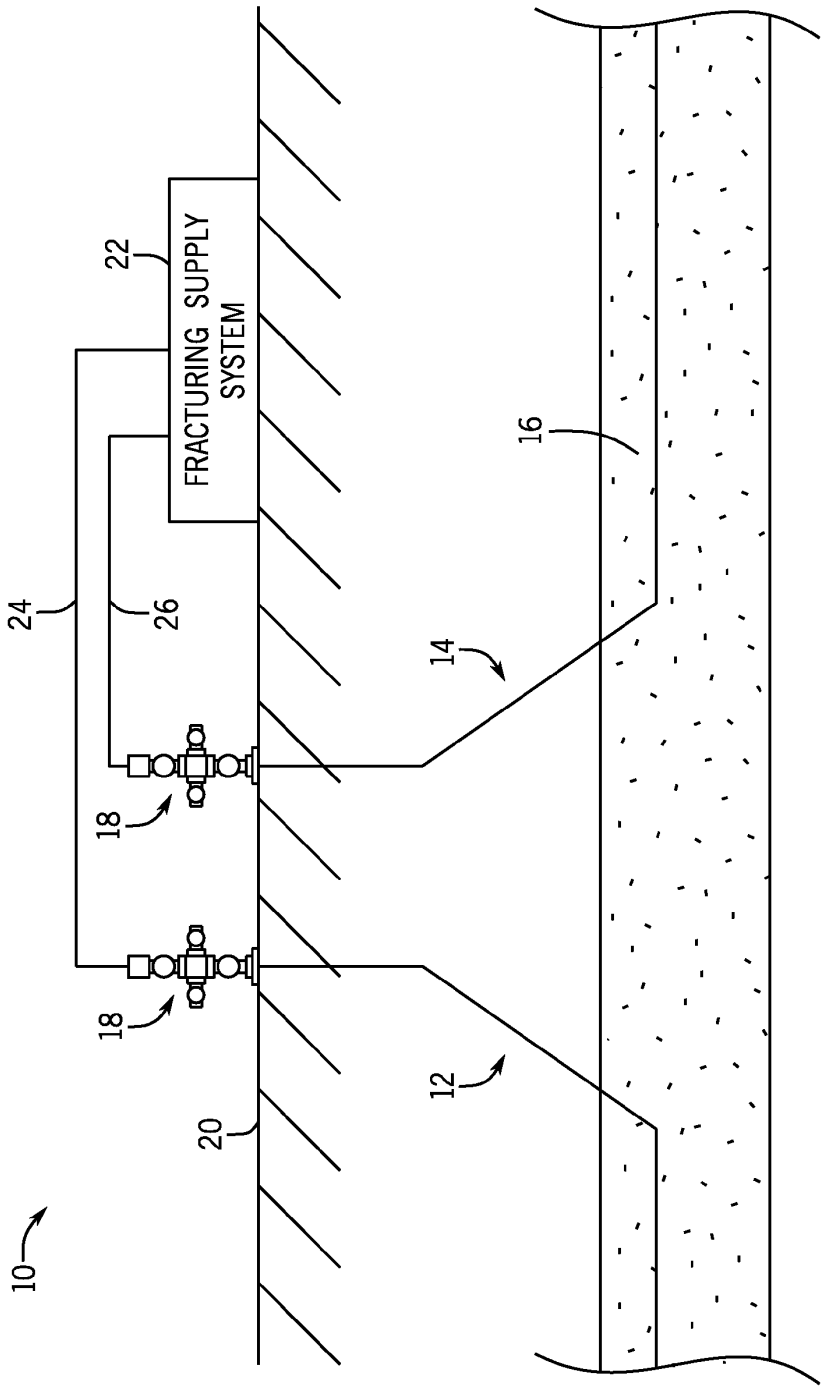

FIG. 1

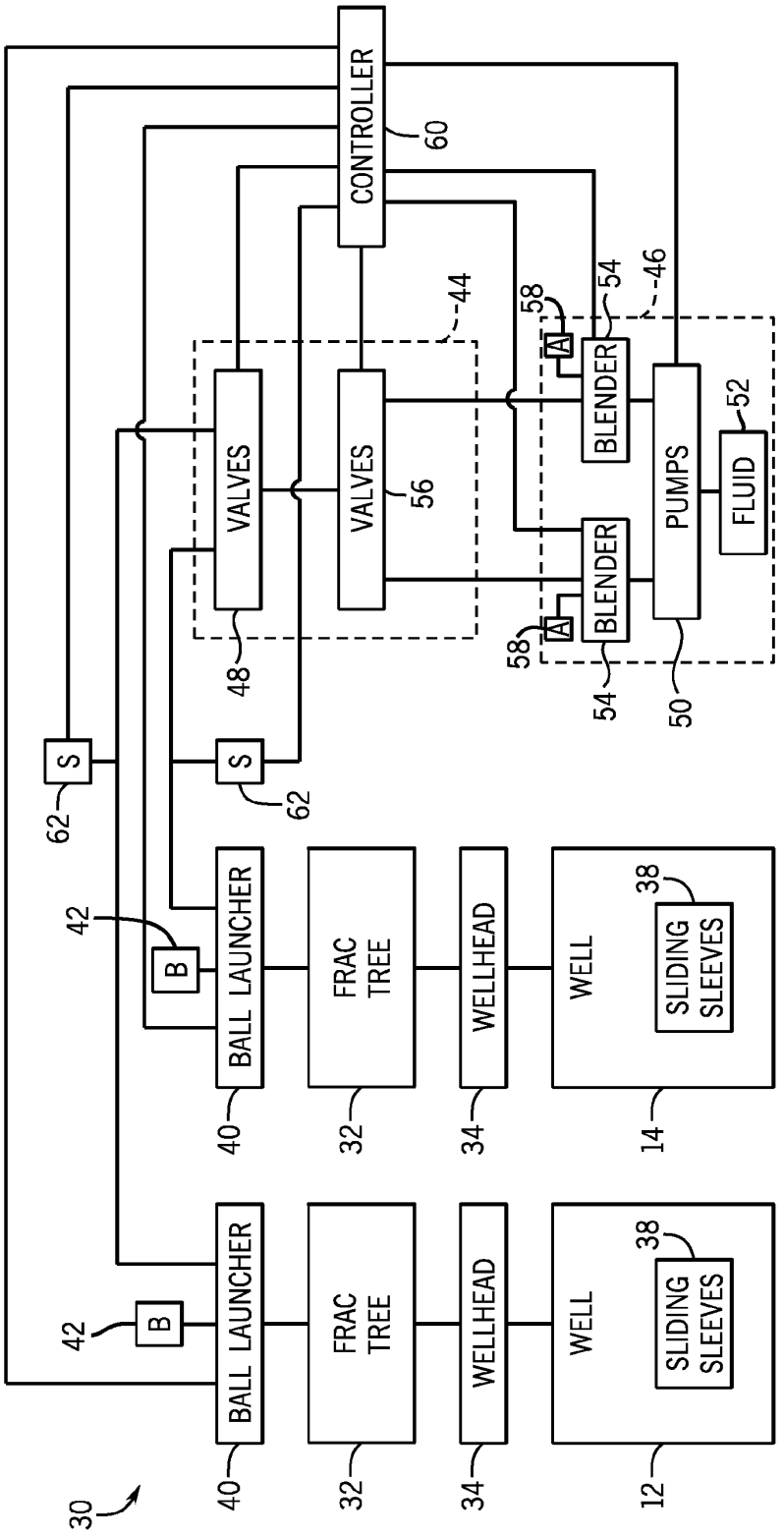
CONTROLLER
60
VALVES
48
VALVES
56
44
46
BLENDER
54
BLENDER
54
PUMPS
50
FLUID
52
A
58
A
58
S
62
S
62
B
42
B
42
BALL LAUNCHER
40
BALL LAUNCHER
40
FRAC TREE
32
FRAC TREE
32
WELLHEAD
34
WELLHEAD
34
WELL
14
WELL
12
SLIDING SLEEVES
38
SLIDING SLEEVES
38
30

FIG. 2

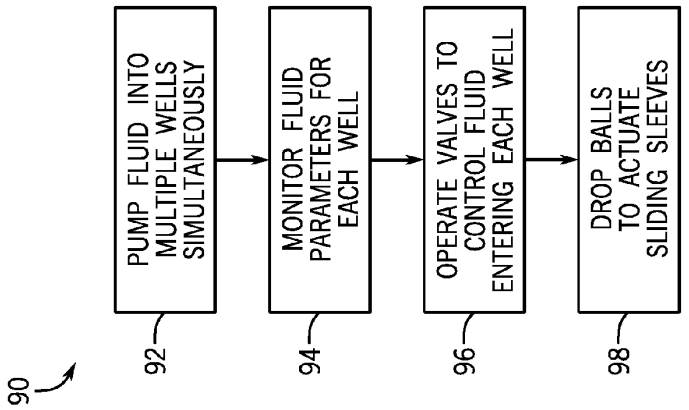
90
92
PUMP FLUID INTO MULTIPLE WELLS SIMULTANEOUSLY
94
MONITOR FLUID PARAMETERS FOR EACH WELL
96
OPERATE VALVES TO CONTROL FLUID ENTERING EACH WELL
98
DROP BALLS TO ACTUATE SLIDING SLEEVES

FIG. 4

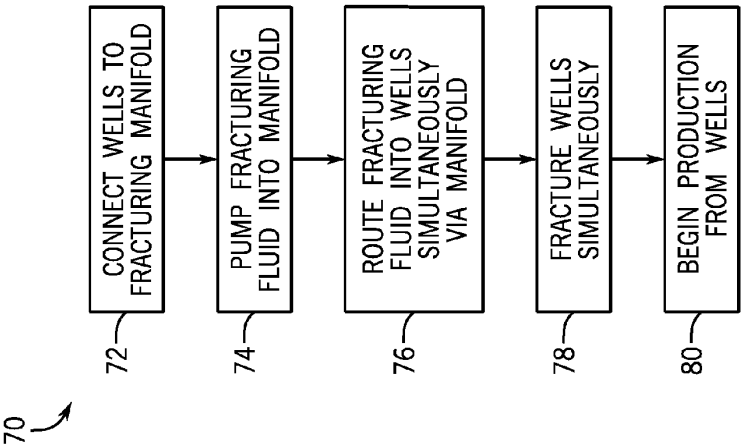
70
72
CONNECT WELLS TO FRACTURING MANIFOLD
74
PUMP FRACTURING FLUID INTO MANIFOLD
76
ROUTE FRACTURING FLUID INTO WELLS SIMULTANEOUSLY VIA MANIFOLD
78
FRACTURE WELLS SIMULTANEOUSLY
80
BEGIN PRODUCTION FROM WELLS

FIG. 3

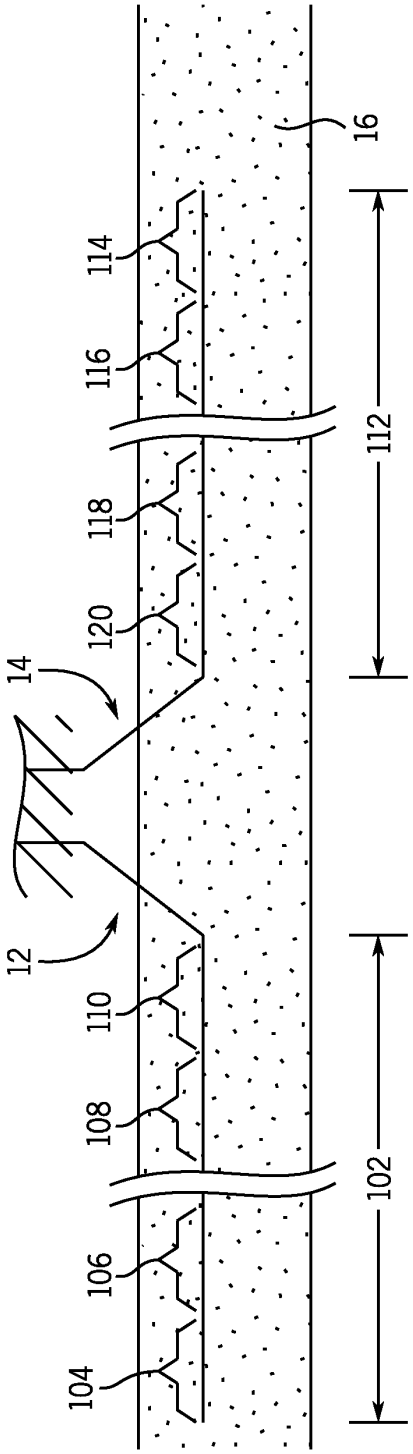

FIG. 5

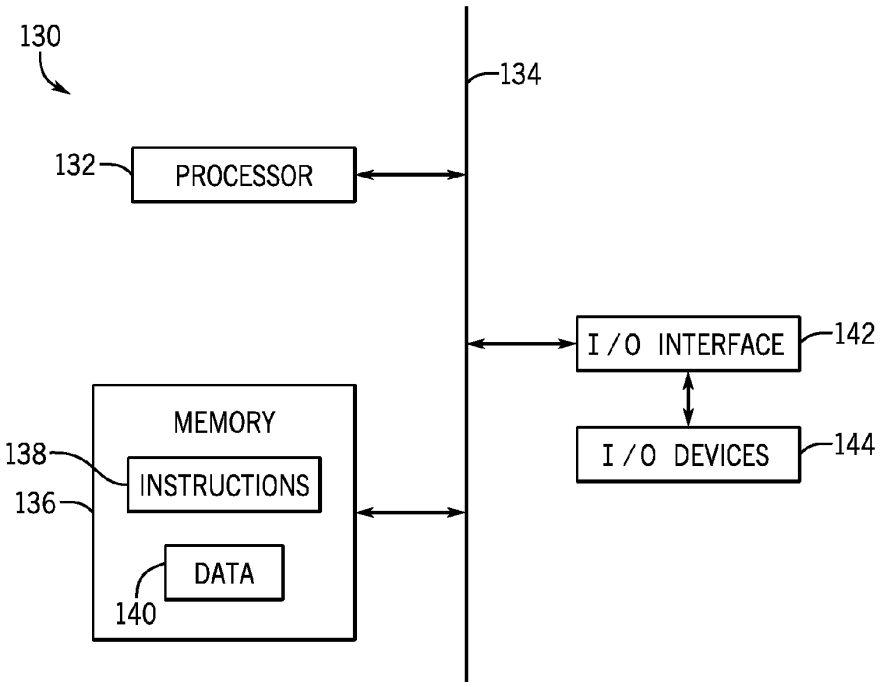
130
134
132
PROCESSOR
I/O INTERFACE
142
MEMORY
138
INSTRUCTIONS
136
DATA
140
I/O DEVICES
144

FIG. 6

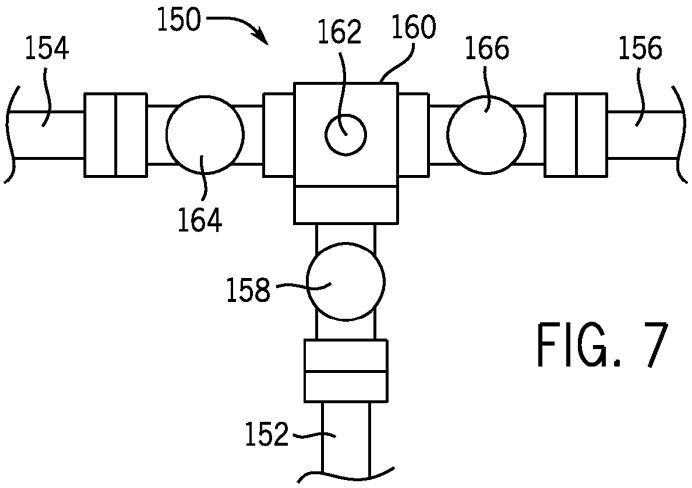
150
154
162
160
166
156
164
158
152

FIG. 7

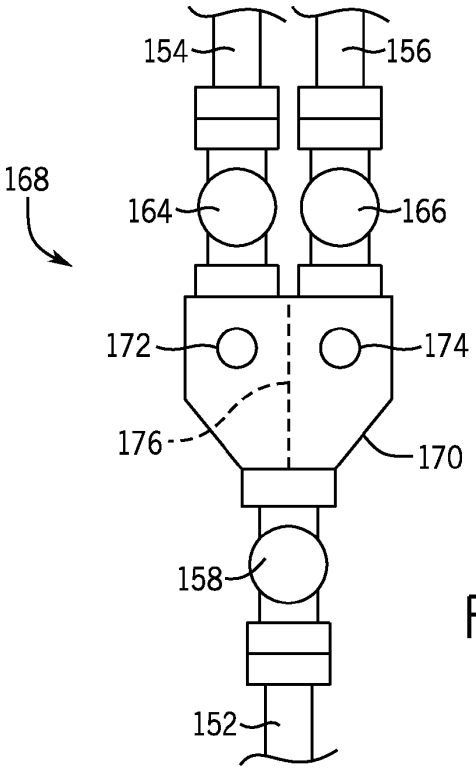
154
156
168
164
166
172
174
176
170
158
152

FIG. 8

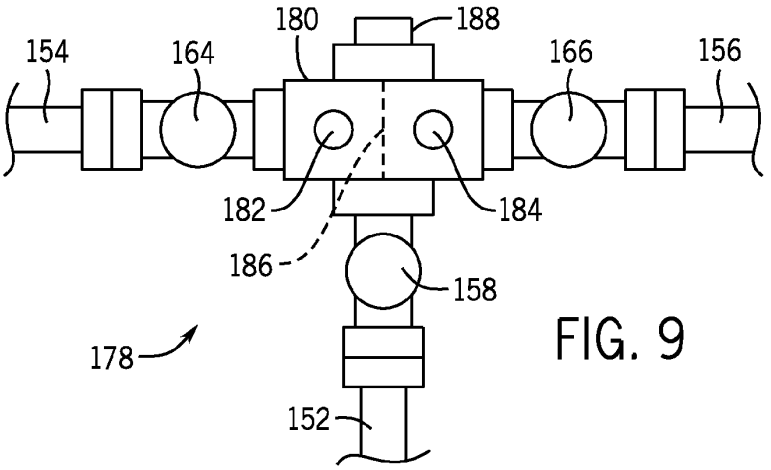
180
188
154
164
166
156
182
184
186
158
178
152

FIG. 9

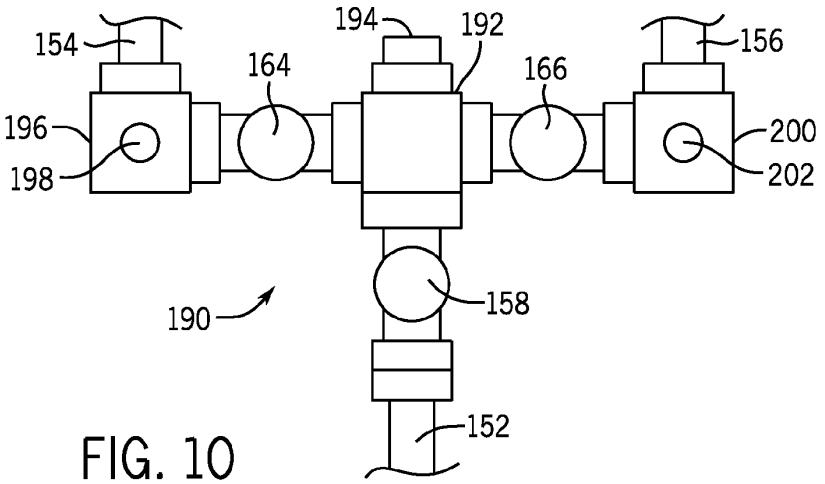
194
192
154
164
166
156
196
198
200
202
190
158
152

FIG. 10

MULTI-WELL SIMULTANEOUS FRACTURING SYSTEM

BACKGROUND

[0001] This section is intended to introduce the reader to various aspects of art that may be related to various aspects of the presently described embodiments. This discussion is believed to be helpful in providing the reader with background information to facilitate a better understanding of the various aspects of the present embodiments. Accordingly, it should be understood that these statements are to be read in this light, and not as admissions of prior art.

[0002] In order to meet consumer and industrial demand for natural resources, companies often invest significant amounts of time and money in finding and extracting oil, natural gas, and other subterranean resources. Particularly, once a desired subterranean resource is discovered, drilling and production systems are often employed to access and extract the resource. These systems may be located onshore or offshore depending on the location of a desired resource. Further, such systems generally include a wellhead assembly through which the resource is extracted. These wellhead assemblies may include a wide variety of components, such as various casings, valves, fluid conduits, and the like, that control drilling or extraction operations.

[0003] Additionally, such wellhead assemblies may use a fracturing tree and other components to facilitate a fracturing process and stimulate production from a well. As will be appreciated, resources such as oil and natural gas are generally extracted from fissures or other cavities formed in various subterranean rock formations or strata. To facilitate extraction of such resources, a well may be subjected to a fracturing process that creates one or more man-made fractures in a rock formation. This facilitates, for example, coupling of pre-existing fissures and cavities, allowing oil, gas, or the like to flow into the wellbore. Such fracturing processes typically include injecting a fracturing fluid—often a mixture or slurry including sand and water—into the well to increase the well's pressure and form the man-made fractures.

SUMMARY

[0004] Certain aspects of some embodiments disclosed herein are set forth below. It should be understood that these aspects are presented merely to provide the reader with a brief summary of certain forms the invention might take and that these aspects are not intended to limit the scope of the invention. Indeed, the invention may encompass a variety of aspects that may not be set forth below.

[0005] Embodiments of the present disclosure generally relate to simultaneous fracturing of multiple wells. In at least some instances, pumping fluid into two or more wells simultaneously to fracture those wells reduces total pumping time for fracturing wells at a pad site. In one embodiment, a fracturing system includes a manifold having valves to independently control flow rates of fracturing fluid to multiple wells. Fracturing fluid can be pumped through the manifold and into the multiple wells simultaneously, and the valves can be operated to balance the volume of fluid pumped into each well. A controller can also be used with the system to remotely actuate the manifold valves and control flow rates based on measured parameters and stored data.

[0006] Various refinements of the features noted above may exist in relation to various aspects of the present embodiments. Further features may also be incorporated in these various aspects as well. These refinements and additional features may exist individually or in any combination. For instance, various features discussed below in relation to one or more of the illustrated embodiments may be incorporated into any of the above-described aspects of the present disclosure alone or in any combination. Again, the brief summary presented above is intended only to familiarize the reader with certain aspects and contexts of some embodiments without limitation to the claimed subject matter.

BRIEF DESCRIPTION OF THE DRAWINGS

[0007] These and other features, aspects, and advantages of certain embodiments will become better understood when the following detailed description is read with reference to the accompanying drawings in which like characters represent like parts throughout the drawings, wherein:

[0008] FIG. **1** generally depicts a fracturing system for simultaneously fracturing multiple wells in accordance with one embodiment of the present disclosure;

[0009] FIG. **2** is a block diagram of various components of the fracturing system of FIG. **1** in accordance with one embodiment;

[0010] FIGS. **3** and **4** are flow charts representative of methods for simultaneously fracturing multiple wells in accordance with certain embodiments of the present disclosure;

[0011] FIG. **5** generally depicts two horizontal wells having fracturing zones in accordance with one embodiment;

[0012] FIG. **6** is a block diagram of a programmable controller for operating the fracturing system of FIGS. **1** and **2** in accordance with one embodiment; and

[0013] FIGS. **7-10** depict various fracturing manifolds in accordance with certain embodiments of the present disclosure.

DETAILED DESCRIPTION OF SPECIFIC EMBODIMENTS

[0014] One or more specific embodiments of the present disclosure will be described below. In an effort to provide a concise description of these embodiments, all features of an actual implementation may not be described in the specification. It should be appreciated that in the development of any such actual implementation, as in any engineering or design project, numerous implementation-specific decisions must be made to achieve the developers' specific goals, such as compliance with system-related and business-related constraints, which may vary from one implementation to another. Moreover, it should be appreciated that such a development effort might be complex and time consuming, but would nevertheless be a routine undertaking of design, fabrication, and manufacture for those of ordinary skill having the benefit of this disclosure.

[0015] When introducing elements of various embodiments, the articles "a," "an," "the," and "said" are intended to mean that there are one or more of the elements. The terms "comprising," "including," and "having" are intended to be inclusive and mean that there may be additional elements other than the listed elements. Moreover, any use of "top," "bottom," "above," "below," other directional terms, and variations of these terms is made for convenience, but does not require any particular orientation of the components.

[0016] Turning now to the present figures, an example of a fracturing system **10** is provided in FIG. **1** in accordance with

one embodiment. The fracturing system **10** facilitates extraction of natural resources (e.g., oil or natural gas) from wells **12** and **14**. Particularly, by injecting a fracturing fluid into the wells **12** and **14**, the fracturing system **10** increases the number or size of fractures in a formation **16** to enhance recovery of natural resources present in the formation **16**.

[0017] The fracturing fluid may, for example, include water (or another liquid) mixed with sand or some other proppants. The fracturing fluid is pumped into the formation **16** to extend fractures and fill them with the proppants, which operate to hold open the fractures after pumping has stopped to allow formation fluids to be more easily produced via the wells **12** and **14**. In at least some embodiments, fracturing fluids used in the wells **12** and **14** also include other additives. For example, the fracturing fluid can include polymers or other agents to increase the viscosity of the fracturing fluid (which aids in carrying the proppants down the wells). And in some instances, the fracturing fluid includes acid (e.g., hydrochloric acid) that initiates fissures in the formation **16**.

[0018] Although generally depicted as horizontal wells extending through the formation **16**, the wells **12** and **14** could take other forms (e.g., vertical wells). In the presently illustrated embodiment, the wells **12** and **14** are surface wells formed at a common pad **20** and accessed through wellhead assemblies **18** installed at the wells. It will, of course, be appreciated that natural resources can be extracted from other types of wells, such as platform or subsea wells.

[0019] The fracturing system **10** also includes a fracturing supply system **22** coupled to the wellhead assemblies **18** by conduits **24** and **26** so as to provide fracturing fluid to the wells **12** and **14** via the conduits. In one embodiment, the fracturing supply system **22** includes various components depicted in block diagram **30** of FIG. **2**. As here illustrated, each of the wells **12** and **14** has a fracturing tree **32** (part of the wellhead assembly **18** of FIG. **1**) installed on a wellhead **34**. The fracturing trees **32** include valves to control flow of fracturing fluids through the wellheads **34** and into their respective wells. The wells **12** and **14** include sliding sleeves **38**, which can be run into or as part of casing strings in the wells. When actuated, the sliding sleeves **38** move to expose ports in the casing strings, allowing fracturing fluid pumped down the wells **12** and **14** to reach the formation **16** via the ports. The wells **12** and **14** can be divided into multiple fracturing zones (also referred to as fracturing stages) and sliding sleeves **38** can be used to isolate the fracturing zones to allow sequential fracturing of each zone.

[0020] In at least some embodiments, such as that depicted in FIG. **2**, the sliding sleeves **38** are ball-actuated sliding sleeves and the fracturing system includes one or more ball launchers **40** to drop balls **42** (which may also be referred to as packer balls or frac balls) into the wells **12** and **14**. For instance, at least some of the sliding sleeves **38** are constructed with seats or baffles for receiving packer balls **42**. When the packer ball engages the seat, the ball inhibits flow through the seat and fluid pressure (e.g., from the pumping of fluid down a well behind the ball) increases and causes the ball to push the sliding sleeve **38** open. The sliding sleeve **38** can be retained in place by a shear pin or some other device so the ball does not move the sleeve **38** until the pressure on the ball exceeds a threshold amount.

[0021] The various sliding sleeves **38** of each well can be constructed for actuation by differently sized packer balls **42** and generally have seats with apertures that allow smaller balls **42** to pass through without actuating the sleeve. More specifically, the sliding sleeves **38** can be arranged in the wells in sequence by the size of the balls **42** used to actuate the sleeves, with the sleeves operated by the smallest balls provided furthest from the surface and the sleeves operated by the largest balls provided closest to the surface. In this arrangement, the smallest ball can dropped into a well and pass through the apertures in other sleeves before reaching (and actuating) the sleeve furthest from the surface. Balls of increasing size can then be sequentially dropped to actuate additional sleeves in the well, with the largest ball being the last dropped in order to actuate the sleeve closest to the surface. The sliding sleeves **38** can be placed between adjacent fracturing zones in the wells so that, as each ball **42** engages the seat of a corresponding sliding sleeve **38**, the ball inhibits flow through the seat and isolates the fracturing zone associated with that actuated sleeve from other fracturing zones further down the well. To facilitate the sequential actuation of the sleeves **38**, the conduits (e.g., conduits **24** and **26**) connecting the ball launchers **40** to the wells **12** and **14** can be provided as single high-pressure lines (one to each well) having bores of sufficient size to allow the largest packer balls **42** to pass from the ball launchers **40** to the wells.

[0022] The system depicted in FIG. **2** also includes a fracturing manifold **44** for controlling the flow of fracturing fluids to both well **12** and well **14**. Fluid conduits **24** and **26** (FIG. **1**) generally connect the fracturing manifold **44** to the wells **12** and **14**. This allows fluid to be routed from the manifold to either or both of the wells **12** and **14** via one or more manifold output valves **48**. The output valves **48** can include any suitable valves (e.g., chokes or gate valves) that facilitate separate and independent control of the flow of fluid from the fracturing manifold **44** to each of the wells **12** and **14**. In some embodiments the ball launchers **40** are provided separately from the fracturing manifold **44** (as depicted in FIG. **2**), while in others the ball launchers **40** are integrated into the manifold **44** (see, e.g., FIGS. **7-10**).

[0023] Various components, collectively denoted with reference numeral **46** in FIG. **2**, cooperate to provide fracturing fluid to the manifold **44**. In the depicted embodiment, such components include pumps **50**, fluid tanks **52**, and blenders **54**. The pumps **50** can be provided by pumping trucks or in some other manner, and these pumps are used to route fluid from the fluid tanks **52** to the manifold **44** and, ultimately, to the wells. Though often water-based, any suitable fracturing fluids can be stored in the fluid tanks **52**. In at least some embodiments, the fracturing fluid stored in the fluid tanks is gelled or crosslinked for increased viscosity, thereby enhancing the ability of the fluid to transport proppants to the formation.

[0024] One or more blenders **54** are used to mix additives **58** into the fracturing fluid. While some other embodiments include a single blender **54**, the system depicted in FIG. **2** includes two blenders. One of the blenders **54** can be used to mix an additive **58** of sand or some other proppant into the fracturing fluid routed from the fluid tanks **52** so that the proppants can be injected into the formation **16** to maintain fissures created or extended during fracturing. The other blender **54** can be used to mix an additive **58** of acid that initiates the creation of new fissures or the extension of old fissures in the formation **16**. In some instances, the fracturing fluid with acid is provided for an initial period to promote fissures and then followed with proppant-laden fracturing fluid to inhibit closing of these fissures once fracturing is completed. Given its role in initiating fissures in the formation

16, the mix of fracturing fluid and acid can be referred to as a "fracturing spear." As noted above, a single blender **54** could instead be used for mixing additives into the fracturing fluid. For example, a single blender **54** could add acid to the fracturing fluid for a given period, after which the blender **54** could be converted to then add a proppant to the fracturing fluid for another time period. But having two blenders **54** may be more efficient in some instances by avoiding conversion of a single blender to mix different additives into the fracturing fluid at different times. And while two blenders **54** are presently depicted, it is noted that additional blenders **54** could also be provided.

[0025] In those embodiments having multiple blenders **54**, and as illustrated in FIG. **2** by way of example, the manifold **44** can include input valves **56** for controlling which fracturing fluid is routed to the output valves **48** at a given time. For instance, one of the input valves **56** can be opened to allow the fracturing spear into the manifold **44** (that is, the fracturing fluid mixed with acid by one of the blenders), while another of the input valves **56** is closed to inhibit flow of proppant-laden fracturing fluid (mixed by a different blender) into the manifold **44**. Once a desired amount of spear fluid is received by the manifold **44** (which can be routed to one or both wells **12** and **14**), the input valves **56** can be operated to stop flow of the spear fluid into the manifold **44** and to allow the fracturing fluid with proppants to enter the manifold **44** and pass to the wells **12** and **14**. Like the output valves **48**, the input valves **56** can include chokes, gate valves, or any other suitable valves.

[0026] Although any or all of the ball launchers **40**, the output manifold valves **48**, and the input manifold valves **56** could be actuated manually, in at least some embodiments these components are operated remotely by a controller. In FIG. **2**, for example, a controller **60** is connected to the ball launchers **40**, the valves **48**, and the valves **56** to control fracturing of the wells **12** and **14**. More specifically, the controller **60** can operate the valves **48** to independently control the flow of fracturing fluid to each of the wells **12** and **14** (e.g., with a separate valve **48** for each of the wells). One or more sensors **62** (e.g., flow meters, pressure gauges, and densimeters) are connected downstream from the output valves **48** to measure operational parameters (e.g., flow rate and pressure). And as discussed in greater detail below, these measured parameters can then be provided as input to the controller **60** to facilitate operation of the fracturing system. The controller **60** can also operate the valves **56** to select a fracturing fluid to be provided to the wells (e.g., one with a high acid concentration or one carrying proppants) and operate the ball launchers **40** to drop balls into the wells **12** and **14** (e.g., to engage sliding sleeves **38** and select fracturing zones). Still further, the controller **60** of some embodiments can also control operation of other devices, such as the blenders **54** and the pumps **50**.

[0027] To reduce the amount of time needed to fracture wells on a shared pad, at least some embodiments of the present technique enable multiple wells to be fractured simultaneously. That is, fracturing fluid may be pumped into two or more wells at the same time to fracture rock surrounding the wells and stimulate well productivity. This is in contrast to other techniques, such as sequential fracturing of each well or other fracturing processes (e.g., zipper fracturing) in which two wells alternate between being prepared for fracturing and actually being fractured. The simultaneous fracturing techniques disclosed herein can be used to reduce, in some instances significantly, the amount of pumping time and associated costs for injecting fluid to fracture multiple wells compared to some previous approaches.

[0028] With this in mind, two processes for fracturing multiple wells (e.g., wells **12** and **14**) are generally represented by flow charts **70** and **90** in FIGS. **3** and **4** in accordance with certain embodiments. These processes are described below in the context of the fracturing system and various components described above with respect to FIGS. **1** and **2**, but it will be appreciated that the methods could be readily applied to other systems.

[0029] In the embodiment generally represented in FIG. **3**, the wells **12** and **14** are connected to the fracturing manifold **44** (block **72**). The wells **12** and **14** can be connected in any suitable manner, but in at least some instances each of the wells **12** and **14** are connected to the manifold **44** via a conduit with a bore diameter sufficient to pass any packer balls **42** to be dropped within the well (e.g., a conduit with a four-inch bore in one embodiment). Once the wells **12** and **14** are connected to the fracturing manifold, fracturing fluid can be pumped into the manifold (block **74**) and then routed out of the manifold (block **76**) into the wells **12** and **14** such that they receive fracturing fluid concurrently. Pumping of the fracturing fluid into each of the wells continues so that the wells **12** and **14** can be fractured simultaneously (block **78**) to stimulate productivity of the wells. Post-fracturing production can commence (block **80**) at any desired time after fracturing is complete (e.g., soon after flowback testing or after a prolonged shut-in period).

[0030] Fracturing multiple wells simultaneously reduces the amount of pumping time (and expense) needed to complete fracturing of wells at a pad. In at least some instances, operation of the fracturing system can be improved by controlling the individual flows of fracturing fluid to each well from the fracturing manifold **44**. By way of example, the process generally represented in FIG. **4** includes pumping fracturing fluid into multiple wells simultaneously (block **92**) and monitoring one or more fluid parameters for each well (block **94**). Examples of the monitored fluid parameters include flow rate, flow volume, density, and pressure, and these parameters can be measured via any suitable devices (e.g., sensors **62**) downstream from the output valves **48**. The method also includes operating valves of the fracturing manifold **44** (e.g., output valves **46** and input valves **56**) to control the fracturing fluid entering each of the wells connected to the manifold (block **96**) based on fluid parameters monitored for each well. Additionally, in this embodiment the method includes dropping balls (block **98**) in the wells **12** and **14** to actuate sliding sleeves **38** and isolate a selected fracturing stage from preceding stages deeper in the wells.

[0031] The operating of the valves and dropping of balls represented by blocks **96** and **98** may be better understood with reference to FIG. **5**. As here depicted, the wells **12** and **14** have lateral (here horizontal) portions extending through the formation **16**. The lateral portions of these wells can have lengths **102** and **112** of thousands of feet measured heel to toe, and these lengths may be equal to or different from one another. The lateral portions of the wells **12** and **14** can be divided into multiple fracturing zones. In FIG. **5**, the well **12** includes fracturing zones or stages **104**, **106**, **108**, and **110**, and the well **14** includes fracturing zones or stages **114**, **116**, **118**, and **120**. Although only a handful of fracturing zones are depicted herein for the sake of explanation, it is noted that the wells **12** and **14** could include any number of desired fracturing zones. Further, each well could be divided into fracturing

zones of equal size or of different size, and the zones of the different wells could also be sized similarly or differently compared to one another. The fracturing zones in some embodiments are divided by sliding sleeves **38** to facilitate sequential isolation and fracturing of these zones.

[0032] In at least some embodiments, including the process represented in FIG. **4**, the fluid distribution between the simultaneously fractured wells is controlled to reduce total pumping time for fracturing the wells. The amount of fracturing fluid used for each well (and for each fracturing zone in the well) can vary depending on the characteristics of the well (e.g., length of well or porosity of the formation). But absent leaks in the system, fluid distribution from the fracturing manifold **44** can be described by:

$$V_{out} = \sum_{i=1}^{n} V_i,$$

[0033] in which V_{out} is the volume of fracturing fluid output from the fracturing manifold **44**, n is the number of wells being simultaneously fractured (two in the presently described embodiment, although a different number of wells may be simultaneously fractured in other embodiments), and V is the volume of fracturing fluid pumped into an individual well i. Given the relationship of flow volume to flow rate, the fluid distribution from the manifold **44** is also described by:

$$V_{out} = \sum_{i=1}^{n} \int Q_i dt,$$

wherein Q_i is the volumetric flow rate for well i.

[0034] In a simple case in which the wells **12** and **14** are identical in length, number of fracturing zones, and wellbore length of the fracturing zones, and also in which each fracturing zone is to receive the same amount of fracturing fluid, the fracturing fluid in the manifold **44** could be divided evenly by the output valves **48** so that each well **12** and **14** receives fracturing fluid at the same rate, such as twenty-five barrels (approximately 2980 liters) per minute, for an identical amount of time. More specifically, a desired amount of fracturing spear fluid (e.g., fifty barrels) can be provided to each well **12** and **14** simultaneously, such as by opening an input valve **56** to allow the spear fluid to enter the manifold **44** and opening output valves **48** such that equal amounts of the spear fluid enters each well. The input valves **56** can then be operated to stop flow of the spear fluid into the manifold and to permit flow of a proppant-laden fracturing fluid into the wells **12** and **14** in equal amounts. Once a given zone has been fractured, the next fracturing zone can be selected by dropping balls **42** into each of the wells to activate sliding sleeves **38** and the spear fluid and the proppant-laden fluid can be routed in the same way to the next fracturing zone. This may be repeated until all of the fracturing zones have been fractured.

[0035] But in practice there will typically be variation in one or more well or fracturing parameters (e.g., wells of different lengths or differences in fracturing zones). In such instances, fluid flow to the individual wells from the fracturing manifold **44** can be controlled through operation of the output valves **48**. For example, if the well **12** were longer than the well **14**, pumping fracturing fluid at the same rate into each well to fracture the lowest zones in each well (i.e., zones **104** and **114**) and then dropping balls **42** into each well at the same time to select the next fracturing zones (i.e., zones **106** and **116**) for each well would cause a greater volume of fracturing fluid to be pumped into the fracturing zone **104** than into the fracturing zone **114** (due to the increased volume of fracturing fluid in the well **12** compared to that in well **14** when the balls **42** are dropped).

[0036] In some embodiments, however, the volumes of fracturing fluid pumped into zones **104** and **114** are balanced by operating the output valves **48** to independently control flow to the wells and change the comparative flow rates of fracturing fluid into the wells **12** and **14**. As noted above, the volume of fracturing fluid pumped into each well is equal to the product of the volumetric flow rate and the amount of time the fluid flows at that rate. Thus, the volume of fracturing fluid pumped into each well can be controlled by adjusting either the flow rate or the amount of time that the fluid is pumped. The greater volume of the well **12** (due to its increased length) can be accounted for as an offset to the amount of fluid that is to be pumped into well **12** from the manifold **44** to fracture zone **104** before dropping a ball **42** to select the next fracturing zone. For instance, if a casing string of the well **12** receiving the fracturing fluid has a volume that is greater than that of a similar casing string of well **14**, the manifold output valves **48** can be operated to slow the flow (and reduce the volume) to the well **12** from the manifold **44** compared to the flow (and volume) to the well **14**. Further, full flow (e.g., twenty-five barrels per minute) can be provided to the well **14** and a desired fracturing time for a given zone can be calculated based on:

$$V_{frac}=Qt+V_p,$$

where V_{frac} the volume of fracturing fluid to pump into the fracturing zone, Q is the volumetric flow rate at which fluid is pumped into the well **14** from the fracturing manifold **44**, t is the desired fracturing time for the zone, and V_p is the volume of the passageway (i.e., fluid conduit) from the ball launcher **40** (of the well **14**) to the far end of the zone being fractured.

[0037] Accordingly, in one embodiment a manifold valve **48** is opened to allow full flow of fracturing fluid, and the volumetric flow rate is measured via a sensor **62** (e.g., a flow meter) and input to the controller **60**. The desired fracturing volume is provided to the controller **60** as initial data, and the volume of the passageway can also be provided as (or calculated from) initial data to the controller **60**. Once the desired fracturing time is determined for zone **114**, that time can be input into the same formula to calculate the appropriate flow rate (the only remaining variable) from the manifold **44** to the well **12** while fracturing the zone **104**. (It is noted that the fracturing and passageway volumes for zone **104** can also be determined from initial data provided to the controller **60**, but may differ from those for zone **114**.) The manifold valve **48** that controls flow to the well **12** can then be adjusted to set the flow rate (which can be measured by a sensor **62**) to the calculated amount. Once the desired fracturing time has elapsed, the ball launchers **40** may be activated to drop balls **42** into the wells **12** and **14** to isolate the next fracturing stages for stimulation. Each fracturing stage of corresponding pairs of stages (e.g., zones **106** and **116**, zones **108** and **118**, and zones **110** and **120**) can be fractured at the same rate and for the same duration if desired, although the rates and durations

could also be varied (e.g., if it is intended that the zones are to receive different volumes of fracturing fluid).

[0038] Although the above example describes balancing fluid distribution by slowing the flow rate into one well compared to another, in other embodiments the flow rates of both wells may be kept the same while the fracturing time is varied. For example, rather than slowing the flow rate of fluid from the manifold **44** to the well **12** for fracturing zone **104**, the fracturing time could be reduced. That is, a valve **48** of the manifold could be closed once a desired volume of fracturing fluid has been pumped into the well **12** while additional fracturing fluid is pumped into well **14**.

[0039] Various functionality described above (including, for example, determining desired flow rates and times for multiple wells and fracturing zones, operating the valves of the manifold to supply desired fluids at desired rates, and dropping balls into the wells to isolate fracturing zones) can be implemented with the controller **60** or with any other suitable controller. In at least some embodiments, such a controller is provided in the form of a processor-based system, an example of which is provided in FIG. **6** and generally denoted by reference numeral **130**. In this depicted embodiment, the system **130** includes a processor **132** connected by a bus **134** to a memory device **136**. It will be appreciated that the system **130** could also include multiple processors or memory devices, and that such memory devices can include volatile memory (e.g., random-access memory) or non-volatile memory (e.g., flash memory and a read-only memory). The one or more memory devices **136** are encoded with application instructions **138** (e.g., software executable by the processor **132** to perform the control and analysis functionality described herein), as well as with data **140** (e.g., volumes of fracturing fluid to be provided to the fracturing zones of the wells). In one embodiment, the application instructions **138** are stored in a read-only memory and the data **140** is stored in a writeable non-volatile memory (e.g., a flash memory). The application instructions **138** and the data **140** can be copied into a faster volatile memory (such as a random-access memory or a local memory of the processor) for execution by the processor. This generally serves to reduce latency and increase operating efficiency of the system **130**.

[0040] The system **130** also includes an interface **142** that enables communication between the processor **132** and various input or output devices **144**. The interface **142** can include any suitable device that enables such communication, such as a modem or a serial port. The input and output devices **144** can include any number of suitable devices. For example, in one embodiment the devices **144** include the sensors **62** (FIG. **2**) for providing input of measured parameters (e.g., flow volume, flow rate, density, and pressure) to the system **130**, a keyboard to allow user-input to the system **130**, and a display or printer to output information from the system **130** to a user. Of course, some devices may allow both input and output, such as a touchscreen display. The input and output devices **144** can be provided as part of the system **130**, although in other embodiments such devices may be separately provided.

[0041] As previously noted, the fracturing manifold **44** facilitates control of fracturing fluid to multiple wells simultaneously. The fracturing manifold **44** can be provided in any suitable form, and examples of forms the manifold **44** could take are generally depicted in FIGS. **7-10**. Beginning with FIG. **7**, a manifold **150** is shown as installed to route fluid received from an intake conduit **152** (e.g., from pumps **50**) to output conduits **154** and **156** (e.g., to wells **12** and **14**). An input valve **158** is provided upstream from a ball drop device **160** (e.g., a ball launcher **40** or a connection block for receiving a ball from such a launcher) having an access port **162** for receiving a ball **42**. The manifold **150** also includes output valves **164** and **166** (which may function like the output valves **48** described above) for controlling flow of fracturing fluid from the manifold to connected wells. The valves **158**, **164**, and **166** can be actuated in any desired manner (e.g., hydraulically or manually). Additionally, in at least some embodiments these valves are hydraulic valves that are actuated remotely in an automated manner via the controller **60**.

[0042] Activation of a ball launcher (whether provided as, or connected to, the ball drop device **160**) to drop balls **42** is also controlled by the controller **60** in some embodiments. To drop balls simultaneously into multiple wells, the valves **164** and **166** can be initially closed. A first ball can be dropped into the manifold **150** and one of the valves **164** and **166** can be briefly opened to advance the first ball a short distance downstream from the opened valve. Once that valve is closed, a second ball can be dropped into the manifold **150** and the other valve can be opened to advance the second ball downstream from that valve. Both valves **164** and **166** can then be opened to flow the balls into their respective wells (via conduits **154** and **156**).

[0043] The manifolds of FIGS. **8-10** also include valves **158**, **164**, and **166** that can be operated in the same manner as described above with respect to FIG. **7**. Further, in FIG. **8** a manifold **168** includes a ball drop device **170** with two access ports **172** and **174** for receiving balls **42**. The device **170** includes an internal divider **176** so that balls entering the manifold through the access port **172** are routed through valve **164** into conduit **154** and balls entering through the access port **174** are routed through valve **166** into conduit **156**.

[0044] In FIG. **9**, a manifold **178** includes a ball drop device **180**. The device **180** includes access ports **182** and **184** for receiving balls **42**, and also includes an internal divider **186** that operates like the divider **176** to guide balls in desired directions. The manifold **178** also includes a cap **188** that can be removed to provide wash-out access to the interior of the manifold. FIG. **10** depicts a manifold **190** having a connection block **192** (including a cap **194** that provides wash-out access to the manifold) for joining the valves **158**, **164**, and **166**. But unlike the manifolds of FIGS. **7-9** (in which the ball drop devices are provided between the input valve **158** and the output valves **164** and **166**), the manifold **190** is arranged so that balls can be dropped into the system downstream from the valves **164** and **166**. Particularly, a ball drop device **196** with access port **198** allows balls to be routed through the conduit **154** to one well, and a ball drop device **200** with access port **202** functions similarly to allow balls to be routed through the conduit **156** to another well. The ball drop devices **196** and **200** (like those shown in FIGS. **7-9**) can be ball launchers or connection blocks constructed to receive balls from such launchers.

[0045] While the aspects of the present disclosure may be susceptible to various modifications and alternative forms, specific embodiments have been shown by way of example in the drawings and have been described in detail herein. But it should be understood that the invention is not intended to be limited to the particular forms disclosed. Rather, the invention is to cover all modifications, equivalents, and alternatives

falling within the spirit and scope of the invention as defined by the following appended claims.

1. A system comprising:

a first fracturing tree installed at a first well;

a second fracturing tree installed at a second well;

a fracturing manifold connected to the first fracturing tree and the second fracturing tree, the fracturing manifold including output valves to independently control flow of fracturing fluid from the fracturing manifold to the first fracturing tree and from the fracturing manifold to the second fracturing tree; and

a controller connected to the output valves of the fracturing manifold to enable the controller to remotely operate the output valves to simultaneously fracture both the first well and the second well by routing fracturing fluid into each of the first and second wells via its respective fracturing tree and to independently control the volume of fracturing fluid entering the first well and the volume of fracturing fluid entering the second well from the fracturing manifold.

2. The system of claim **1**, comprising at least one ball launcher connected to one or both of the first fracturing tree and the second fracturing tree.

3. The system of claim **2**, wherein each of the first and second wells include sliding sleeves for isolating different fracturing zones in the first and second wells.

4. The system of claim **3**, wherein the sliding sleeves are ball-actuated sliding sleeves and the controller is connected to the at least one ball launcher so as to allow the controller to remotely operate the at least one ball launcher to release balls into the fracturing fluid to be conveyed to the ball-actuated sliding sleeves of the first and second wells.

5. The system of claim **1**, comprising a fracturing supply system connected to the fracturing manifold, the fracturing supply system including pumps connected to a blender.

6. The system of claim **5**, wherein the fracturing supply system includes an additional blender and the fracturing manifold includes input valves connected to the blender and to the additional blender to control flow of fracturing fluid from the blender and from the additional blender into the fracturing manifold.

7. The system of claim **6**, wherein the controller is connected to the input valves to enable remote operation of the input valves by the controller.

8. The system of claim **1**, comprising sensors coupled between the output valves of the fracturing manifold and the first and second wells, wherein the controller is configured to receive input from the sensors and use the received input to vary operation of the output valves of the fracturing manifold.

9. A system comprising:

a fracturing manifold including:

an input valve;

at least two output valves connected in fluid communication with the input valve; and

one or more ball launchers integrated as part of the fracturing manifold.

10. The system of claim **9**, wherein the one or more ball launchers are integrated into the fracturing manifold between the input valve and the at least two output valves.

11. The system of claim **9**, wherein the one or more ball launchers include a first ball launcher connected at, and downstream of, one of the output valves and a second ball launcher connected at, and downstream of, another of the output valves.

12. A method comprising:

receiving fracturing fluid into a manifold;

routing the fracturing fluid from the manifold into multiple wells simultaneously;

measuring flow characteristics of the fracturing fluid output from the manifold with sensors downstream from the manifold;

providing input based on the measured flow characteristics to a controller; and

actuating valves connected to the multiple wells with the controller to control the amount of fracturing fluid routed into each of the multiple wells.

13. The method of claim **12**, wherein measuring flow characteristics of the fracturing fluid output from the manifold includes measuring volumetric flow rate from the manifold to each of the multiple wells.

14. The method of claim **13**, comprising calculating a duration for pumping fracturing fluid from the manifold into a first well of the multiple wells to stimulate a fracturing zone of the first well.

15. The method of claim **14**, comprising determining, based on the calculated duration for the first well, a desired volumetric flow rate for fracturing fluid into a second well via the manifold.

16. The method of claim **12**, wherein actuating valves connected to the multiple wells includes operating at least one of the valves to balance volumes of fracturing fluids routed into each of the multiple wells.

17. The method of claim **12**, wherein actuating valves connected to the multiple wells includes actuating valves of the manifold.

18. The method of claim **12**, comprising selecting between different fracturing fluids for pumping into the manifold by actuating one or more input valves of the manifold.

19. A method comprising:

connecting a fracturing manifold to a plurality of wells;

stimulating at least two wells of the plurality of wells to increase productivity of the at least two wells, wherein stimulating the at least two wells includes simultaneously fracturing the at least two wells with fracturing fluid routed into each of the at least two wells via the fracturing manifold.

20. The method of claim **19**, comprising simultaneously pumping fracturing fluid from the fracturing manifold into a first well and into a second well of the at least two wells at different flow rates.

21. The method of claim **20**, comprising controlling at least one valve to cause the flow rates of fracturing fluid from the fracturing manifold into the first and second wells to differ.

22. The method of claim **21**, wherein controlling the at least one valve includes controlling at least one valve of the fracturing manifold.

23. The method of claim **21**, wherein controlling the at least one valve includes automatically controlling the at least one valve remotely with a programmed controller.

24. The method of claim **19**, comprising producing formation fluids from the at least two wells.

* * * * *