IN THE UNITED STATES PATENT AND TRADEMARK OFFICE

BEFORE THE PATENT TRIAL AND APPEAL BOARD

INTELLIGENT WELLHEAD SYSTEMS, INC.,
Petitioner,

v.

DOWNING WELLHEAD EQUIPMENT, LLC,
Patent Owner.

IPR2024-00256
U.S. Patent 11,401,779

PATENT OWNER PRELIMINARY RESPONSE

TABLE OF CONTENTS

I. INTRODUCTION 1

II. EVERY GROUND IN THE PETITION IS FATALLY DEFECTIVE 2

A. Grounds 1, 2, and 4: Krupa is not prior art. 2

1. Petitioner fails to establish Krupa as prior art in the Petition, which is a non-correctable error. 2

i. Legal Standard 3

ii. Petitioner was required to—but did not—establish priority to the Krupa Provisional in the Petition 8

2. Even if given priority to its provisional filing date, Krupa is not prior art due to Downing's public disclosures under § 102(b)(2). 9

i. Patent Owner publicly disclosed continuous pumping before the Krupa provisional was filed. 11

ii. The information on the continuous pumping webpage was obtained directly from a joint inventor of the '779 Patent. 13

iii. The continuous pumping webpage discloses the same subject matter relied upon in Krupa. 14

iv. Without Krupa's continuous pumping disclosure, Petitioner fails to carry its burden. 21

B. Grounds 3 and 5: Denial is warranted under 35 U.S.C. § 325(d). 22

1. Prosecution History of the '779 Patent 23

2. *Advanced Bionics* Part One 24

i. The Examiner rejected the pending claims in view of Kajaria. 24

ii. Petitioner's secondary reference, Jackson, is cumulative to the Examiner's secondary reference, Pitcher. 25

3. *Advanced Bionics* Part Two 30

i. The Petition does not allege material error. 30

ii. The Petition does not present any evidence that would warrant reconsideration. 33

III. THE '779 PATENT 34

A. Technological background 34

B. Summary of the '779 Patent 37

IV. CLAIM CONSTRUCTION 40

V. THE PETITION FAILS TO SHOW A REASONABLE LIKELIHOOD OF SUCCESS ON THE MERITS 40

A. The Krupa Grounds do not establish a reasonable likelihood of success. 40

1. Ground 1: Krupa does not anticipate the Challenged Claims. 41

i. Krupa does not disclose determining that the flow rate of the fluid being pumped into the first well is below a flow rate threshold and has been below the flow rate threshold for a threshold amount of time (Limitations 1.3, 1.4, 8.4, 8.5).....42

ii. Krupa does not disclose determining that the measured flow rate has or has not satisfied one or more conditions (Limitations 15.6–15.7 and 25.8–25.9) 44

2. Ground 2: Krupa does not render the Challenged Claims obvious. 45

3. Ground 4: The combination of Krupa and Jackson does not render the Challenged Claims obvious. 47

B. The Kajaria Grounds do not establish a reasonable likelihood of success. 48

1. Ground 3: The combination of Kajaria and Jackson does not render the Challenged Claims obvious. 48

i. The combination of Kajaria and Jackson does not disclose or render obvious opening a second valve associated with a second well during pumping of the fluid into the first well via the first valve (Limitations 1.5 and 8.7) 50

ii. The combination of Kajaria and Jackson does not disclose or render obvious closing the first valve associated with the first well during pumping of the fluid into the second well via the second valve (Limitations 1.7 and 8.9).....54

iii. The combination of Kajaria and Jackson does not disclose or render obvious determining whether to open the first valve before closing the second valve in response to determining whether one or more flow-rate conditions are met (Limitations 15.6, 15.7, 25.8, and 25.9) 56

iv. The Petition fails to show that it would have been obvious to combine Kajaria and Jackson. 60

2. Ground 5: The combination of Kajaria, Jackson, and Martino does not render the Challenged Claims obvious. 63

III. CONCLUSION.....64

Patent Owner's Exhibit List

Exhibit	Description
Ex.2001	Wayback Machine - Downing Continuous Pumping Web Page
Ex.2002	Downing Continuous Pumping WordPress Page
Ex.2003	Tim Marvel Email RE Continuous Pumping Webpage with Attachment
Ex.2004	Marvel LinkedIn Post 1/12/2020
Ex.2005	Declaration of Tim Marvel
Ex.2006	Declaration of John Hughett
Ex.2007	CV of John Hughett
Ex.2008	US2014/0352968 to Pitcher

I. INTRODUCTION

Even before reaching the merits, every ground in the Petition suffers from a fatal defect. Grounds 1, 2, and 4 rely upon a reference—Krupa—that is not prior art. Grounds 3 and 5 rely upon the same and substantially the same prior art that the Office considered during prosecution—but Petitioner fails to allege Examiner error. These shortcomings alone require denial.

Krupa is not prior art for two independent reasons. First, Petitioner failed to make the threshold showing that Krupa's provisional provides support for the relied-upon portions of Krupa. Second, even if Petitioner had made such a showing, many of those relied-upon portions would be disqualified as prior art under 35 U.S.C. § 102(b)(2)(B) because Downing had already publicly disclosed the same subject matter.

Petitioner was apparently (and rightfully) concerned about Krupa's prior art status and included backup grounds based upon much earlier references. *See* Petition, 15 n. 4 ("Even if '779 is entitled to an earlier effective filing date, *Kajaria*, *Jackson*, and *Martino* are still § 102(a)(1) prior art."). All of these backup references, however, are directed to aspects of hydraulic fracturing unrelated to Downing's continuous pumping invention—but Petitioner nevertheless attempts to read them onto the claims. This predictably results in disclosure gaps that Petitioner fills with unsupported claims of inherency and obviousness.

For these reasons, and the many others below, Patent Owner respectfully requests that the Board deny institution.

II. EVERY GROUND IN THE PETITION IS FATALLY DEFECTIVE

A. Grounds 1, 2, and 4: Krupa is not prior art.

The Petition relies upon U.S. Patent Publication No. 2022/0268141 to Krupa (Ex.1003) as the primary reference in Grounds 1, 2, and 4 (the "Krupa Grounds"). Krupa, however, is not prior art because it was filed on February 18, 2022—*after* the '779 Patent's priority date of May 17, 2021. Although Krupa's provisional was filed before May 17, 2021, Petitioner does not make the required showing that the subject matter relied upon in Krupa is supported by its provisional.

Moreover, even if Petitioner had made this showing, key portions of Krupa relied upon in the Petition would be disqualified as prior art under 35 U.S.C. § 102(b)(2)(B) because Downing publicly disclosed those portions before the filing date of Krupa's provisional.

1. Petitioner fails to establish Krupa as prior art in the Petition, which is a non-correctable error.

Petitioner contends that "*Krupa* is prior art under 35 U.S.C. § 102(a)(2)" solely because Krupa claims priority to U.S. Provisional App. No. 63/153,607 (the "Krupa Provisional"), filed February 25, 2021, which is earlier than the '779 Patent's priority date of May 17, 2021. Petition, 6 ("Because *Krupa's* effective

filing date is February 25, 2021—before '779's priority date (May 17, 2021)—*Krupa* is prior art under 35 U.S.C. § 102(a)(2).").

This assertion alone is insufficient to establish Krupa as prior art. Critically, Petitioner fails to establish that the subject matter relied upon in Krupa is supported by the Krupa Provisional. Without this threshold showing ***in the Petition***, Petitioner has not carried its burden to show that Krupa qualifies as prior art. This is a defect fatal to the Krupa Grounds, and one that cannot be corrected.

i. Legal Standard

Under 35 U.S.C. § 102(d)(2), a patent or patent application entitled to claim a right to priority to a provisional application "shall be considered to have been effectively filed, with respect to any subject matter described in the patent or application . . . as of the filing date of the earliest such application that describes the subject matter." The Federal Circuit and the Board have consistently held that a provisional application must provide sufficient support for the subject matter relied upon for prior art purposes in the reference patent or published patent application. *See In re Giacomini*, 612 F.3d 1380, 1383 (Fed. Cir. 2010) (requiring that the relied upon subject matter "was carried forward from an earlier U.S. provisional application or U.S. non-provisional application"); *Penumbra, Inc. v. RapidPulse, Inc.*, IPR2021-01466, Paper 34 at 32-34 (Mar. 10, 2023) (precedential as to § II.E.3) ("[U]nder the AIA, . . . the provisional or other earlier application(s) to

which the reference patent document claims a right of priority must 'describe[] the subject matter' relied upon in the reference patent document as prior art" (quoting 35 U.S.C. § 102(d)(2))); *see also Cox Commc'ns, Inc. v. AT&T Intell. Prop. I, L.P.*, IPR2015-01227, Paper 70 at 28-29 (Nov. 16, 2015) ("[T]he material relied upon as teaching the subject matter of the challenged claims must be carried through from that earlier filed application to the reference patent being used against the claim." (citing *Giacomini*, 612 F.3d at 1383)). The MPEP also recognizes this requirement. MPEP § 2151 ("[A] U.S. patent document is effective as prior art as of the filing date of the earliest application to which benefit or priority is claimed and which describes the subject matter relied upon.").[1]

Accordingly, when a petitioner relies on a reference's provisional application date to establish the reference as prior art, the petitioner has the "initial burden" in the petition to show that the provisional supports the relied-upon subject matter in the reference. *Forescout Techs., Inc. v. Fortinet, Inc.*, No. IPR2021-01328, Paper 12, at 9-10 (Jan. 27, 2022) ("[Petitioner] has *an initial burden* . . . to show that the subject matter that [Petitioner] relies on in [the

[1] For AIA cases, a petitioner is not required to also prove that at least one claim of the reference is supported in the provisional application. *Penumbra*, Paper 34 at 29-32.

reference] is also found in the [provisional]")[2]; *Apple Inc. v. Telefonaktiebolaget LM Ericsson*, No. IPR2022-00348, Paper 9, at 4 (Sept. 21, 2022) ("Among other obligations, a petitioner carries a burden of production to show *in its petition* that the asserted references qualify as prior art." (citing *Dynamic Drinkware*, 800 F.3d at 1380)); *Apple Inc. v. R.N Nehusht An Trust Ltd.*, No. IPR2023-00230, Paper 8, at 9 n.2 (June 14, 2023) ("Petitioner is attempting to establish, *and thus bears the burden to establish*, that [the reference] is prior art that can be used against the [challenged] patent based on its earlier priority claim") (all emphases added). The panel in *Securus* explained this burden succinctly: "When the qualification of a reference as prior art depends on the existence of adequate support in another reference, this mandate requires that Petitioner explain where such support for its challenge can be found." *Securus Techs., Inc. v. Glob. Tel*Link Corp.*, No. IPR2015-00153, Paper 12, at 8 (May 1, 2015). A petitioner must make this showing in the petition because "[i]n an [*inter partes* review], the petitioner has the burden *from the onset* to show with particularity why the patent it challenges is unpatentable." *Penumbra*, Paper 34 at 8 (emphasis added).

The Board routinely finds petitions fatally defective when a petitioner fails to show that the relied-upon portions of a reference are supported by its

[2] All emphasis is added unless otherwise noted.

provisional, when the provisional filing date is needed for priority. For example, in *Ericsson*, the Board denied institution because the petition failed to show such support:

> Fatal to the Petition, though, Petitioner did not establish that the subject matter relied upon for prior art was effectively filed in the provisional applications. 35 U.S.C. §§ 102(a)(2), 102(d). Under the AIA, a provisional application must "describe[] the subject matter" relied upon as prior art in the reference patent. 35 U.S.C. §102(d); see also MPEP § 2154.01(b). Petitioner does not assert, much less show, that the provisional applications satisfy the subject-matter requirement.

Ericsson, Paper 9, at 4–6. Similarly, in *Forescout*, the Board denied institution, explaining that:

> [Petitioner] Forescout has an initial burden … to show that the subject matter that Forescout relies on in Thomas is also found in the Thomas Provisional. Because Forescout has not met that burden, we determine that Forescout has not adequately shown that it is reasonably likely to prevail on the issue of whether Thomas is prior art to the challenged claims of the '421 patent under 35 U.S.C. § 102(a)(2).

Forescout, Paper 12, at 9-11; *see also Securus*, Paper 12, at 5-8 (denying institution where petitioner failed to show in the petition that the subject matter relied upon in the prior art was described in the provisional application); *Ironridge, Inc. v. Pegasus*

Solar, Inc., PGR2022-00024, Paper 9, at 28-32 (Aug. 10, 2022) (determining that petitioner failed to show more likely than not that it would prevail on grounds where it did not establish in the petition that a reference publication was entitled to the benefit of its provisional filing date).

The only circumstance in which a petitioner can establish priority to a reference's provisional filing date *after* it submits its petition is when the reference is facially prior art based on its filing date, but the patent owner subsequently raises an argument requiring the petitioner to rely on the earlier provisional filing date. *See Dynamic Drinkware*, 800 F.3d at 1379-80 (explaining that under the shifting burdens of production, petitioner has an initial burden of production by arguing that the reference anticipated the challenged claims, but after patent owner subsequently produced evidence that the challenged patent was entitled to an earlier filing date, the burden returned to petitioner to show that the reference was entitled to the benefit of the its provisional filing date); *K/S HIMPP v. BRAGI GmbH*, No. IPR2023-00901, Paper 14 at 2, 10-12 (Nov. 13, 2023) (allowing petitioner to claim priority to parent applications in a preliminary reply where the petition established that the reference was filed before the challenged patent's effective filing date but patent owner's preliminary response provided evidence of a public disclosure date before the reference's filing date). Accordingly, where a petitioner *does not* need to rely on the provisional application's priority date at the

time of filing the petition, the petitioner *does not* have an initial burden of proving entitlement to the provisional priority date. *Dynamic Drinkware*, 800 F.3d at 1379-80. In contrast, where a petitioner *does* rely on the provisional application's priority date at the time of filing the petition, the petitioner *does* have an initial burden of proving entitlement to that priority date. *Motorola Mobility LLC v. Maxell, LTD*, No. IPR2023-00110, Paper 7, at 28 (June 15, 2023) ("On its face, [the reference] does not qualify as prior art to the [challenged] patent, so when Petitioner filed its Petition, it was clear that Petitioner needed to rely on the [provisional] to establish that [the reference] was prior art.").

ii. Petitioner was required to—but did not—establish priority to the Krupa Provisional in the Petition

Here, Krupa does not qualify as prior art on its face. Petitioner thus had the initial burden in the Petition to show that Krupa was prior art based on disclosure in the Krupa Provisional. Petitioner failed to make that threshold showing.

Petitioner does not even allege—much less show—that the Krupa Provisional provides §112 support for the portions of Krupa it relies upon in Grounds 1, 2, and 4. The Petition merely asserts that "*Krupa* is prior art under 35 U.S.C. § 102(a)(2)" because the date of the Krupa Provisional is before the '779 Patent's priority date. Petition, 6. The Petition does not, for example, map the relevant portions of Krupa to portions of the Krupa Provisional. *See generally*

Petition, 19-54. The Petition does not cite to or discuss the contents of the Krupa Provisional ***at all***—nor could it, the Krupa Provisional is not even an exhibit. *See* Petition, v-viii. Thus, even if the Board felt compelled to "play archaeologist with the record"—which it is under no obligation to do—the proverbial tomb would be empty. *DeSilva v. DiLeonardi*, 181 F.3d 865, 867 (7th Cir. 1999).

Because the Petition does not show that the subject matter relied upon in Krupa is supported by the Krupa Provisional, Petitioner has failed to establish that Krupa is prior art. Petitioner therefore cannot show a reasonable likelihood of prevailing on the Krupa Grounds.

2. Even if given priority to its provisional filing date, Krupa is not prior art due to Downing's public disclosures under § 102(b)(2).

Even if the Petition had established that Krupa is entitled to the Krupa Provisional's effective filing date, the Krupa Grounds would still fail for another reason—key portions of Krupa are disqualified as prior art under 35 U.S.C. § 102(b)(2)(B). Specifically, before the Krupa Provisional was filed, Patent Owner's own website publicly disclosed portions of Krupa that Petitioner relies upon for its grounds, which removes those portions as prior art under the § 102(b)(2)(B) exception. Without those portions of Krupa, Petitioner cannot show a reasonable likelihood of prevailing on the Krupa Grounds.

As explained above, Petitioner contends that Krupa is prior art only under 35 U.S.C. § 102(a)(2). Petition, 6. Section 102(b)(2), however, provides three exceptions that eliminate certain disclosures as § 102(a)(2) prior art. 35 U.S.C. § 102(b)(2)(A)–(C). Relevant here, the exception under § 102(b)(2)(B) eliminates a disclosure as prior art if the same subject matter had previously been publicly disclosed by another who obtained the subject matter directly from a joint inventor:

> (2) Disclosures appearing in applications and patents.—A disclosure shall not be prior art to a claimed invention under subsection (a)(2) if— . . .
>
> > (B) the subject matter disclosed had, before such subject matter was effectively filed under subsection (a)(2), been publicly disclosed by the inventor or a joint inventor or another who obtained the subject matter disclosed directly or indirectly from the inventor or a joint inventor[.]

35 U.S.C. § 102(b)(2)(B).

The § 102(b)(2)(B) exception applies when the subject matter in a reference disclosure and the earlier inventor-originated public disclosure are the same. MPEP § 717.01(b)(2) ("The [§ 102(b)(2)(B) exception is] only applicable when the subject matter of the intervening disclosure is the same as the subject matter of the earlier inventor-originated prior public disclosure"). Though, "there is no requirement that the disclosure by the inventor or a joint inventor be a verbatim or *ipsissimis verbis* disclosure of [a reference] disclosure in order for the exception

based on a previous public disclosure of subject matter by the inventor or a joint inventor to apply." *Id.*

The earlier inventor-originated public disclosure need not disclose everything in the reference disclosure to disqualify the reference disclosure as prior art. Instead, the § 102(b)(2)(B) exception permits *portions* of the reference to be removed as prior art. MPEP § 717.01(b)(2) ("[T]he portion of the [reference] third party's intervening disclosure that was previously in an inventor-originated disclosure (i.e., the same subject matter) is excepted as prior art under 35 U.S.C. 102(a)."). The MPEP provides one example of partial disqualification:

> [I]f the inventor or a joint inventor had publicly disclosed elements A, B, and C, and a subsequent [reference] U.S. patent, U.S. patent application publication, or WIPO published application discloses elements A, B, C, and D, then element D of the [reference] U.S. patent, U.S. patent application publication, or WIPO published application is still available as prior art under 35 U.S.C. 102(a)(2).

MPEP § 717.01(b)(2). In this example, elements A, B, and C are disqualified from the reference disclosure because they were previously publicly disclosed, and only element D is available as § 102(a)(2) prior art.

i. Patent Owner publicly disclosed continuous pumping before the Krupa provisional was filed.

The claims of the ’779 Patent are directed to continuous pumping. The claims recite limitations directed to pumping a second well while a first well is open, and, while pumping in the second well, closing the first well. *See*, e.g., limitations 1.5, 1.7, and 1.8. On October 12, 2020, Patent Owner published on its public-facing website a webpage describing continuous pumping. Ex.2002; Ex.2005, ¶¶5, 11. The Internet Archive Wayback Machine archived a copy of this webpage on October 20, 2020, eight days after it was originally published. Ex.2001; Ex.2005, ¶5.[3] Patent Owner thus publicly disclosed continuous pumping on October 12, 2020, and no later than October 20, 2020.

Given its October 2020 publication date, Patent Owner’s continuous pumping webpage was published four months before the Krupa Provisional was filed (February 25, 2021) and over one year before Krupa was filed (February 18, 2022). Accordingly, Patent Owner publicly disclosed continuous pumping before either the Krupa Provisional or Krupa had been filed.

[3] The Internet Archive Wayback Machine archived copy is captured in Ex.2001 and accessible at https://web.archive.org/web/20201020115107/https://downingusa.com/freedomseries/continuouspumping.

ii. The information on the continuous pumping webpage was obtained directly from a joint inventor of the '779 Patent.

Timothy Marvel, Vice President of Business Development and Technology at SEF Energy,[4] drafted and published the continuous pumping webpage on Patent Owner's public-facing website. Ex.2005, ¶¶4, 6. Mr. Marvel learned about the information describing continuous pumping on the webpage directly from Austin Johnson, a joint inventor of the '779 patent. *Id.*, ¶¶6-10.

In more detail, in September 2020, Mr. Marvel learned about Patent Owner's team successfully performing continuous pumping via Downing's commercial fracking system, the Freedom Series Completion System. Ex.2005, ¶8. Mr. Marvel learned this directly from Mr. Johnson. *Id.*. Mr. Marvel subsequently prepared materials to promote Patent Owner's continuous pumping capability. *Id*. One of the materials Mr. Marvel prepared was the continuous pumping webpage that would be published on Patent Owner's public-facing website. *Id.*, ¶¶5-6, 9; Ex. 2001; Ex.2002. Using the information obtained from Mr. Johnson, Mr. Marvel drafted the webpage on continuous pumping. Ex.2005, ¶9.

On October 9, 2020, Mr. Marvel sent a preliminary draft of the continuous pumping webpage to Mr. Johnson to confirm he had accurately represented the

[4] Patent Owner is a subsidiary of SEF Energy. Ex.2005, ¶4.

information on continuous pumping he obtained from Mr. Johnson Ex.2005, ¶10; Ex.2003. Mr. Johnson provided Mr. Marvel feedback on the draft webpage, which Mr. Marvel incorporated into the final version of the webpage. Ex.2005, ¶10. On October 12, Mr. Marvel published the webpage describing continuous pumping on Patent Owner's public facing website. Ex.2005, ¶¶5, 11; Ex.2001; Ex.2002. Accordingly, Patent Owner—through Mr. Marvel—publicly disclosed information regarding continuous pumping that was obtained directly from a joint inventor of the '779 Patent.

iii. The continuous pumping webpage discloses the same subject matter relied upon in Krupa.

The limitations related to continuous pumping include limitations [1.5]/[8.7], [1.7]/[8.9], [1.8]/[8.10], [15.4]/[25.6], and [15.5]/[25.7], which recite the process of opening a second well while a first well is still open, and subsequently closing the first well. The Petition relies entirely on Krupa for these limitations. *See* Petition, 25–29, 38–39, 41–42, 83–85. Patent Owner's continuous pumping webpage, however, discloses the same subject matter relied upon in Krupa related to continuous pumping.

Limitations [1.5]/[8.7] recite "opening a second valve associated with a second well." The Petition asserts that:

> Krupa's CP methods "include pumping the fluids into a second well via the at least one pump manifold while continuously pumping the fluids into the first well by opening a second set of valves." [0005]. Figure 2B illustrates where "a second set of valves 223, 224 may be opened while the first set of valves 221, 222 remain open during the pumping of the flush fluid." [0043].

Petition, 25 (citing Ex.1003, [0005], [0043], Fig. 2B). Patent Owner's continuous pumping webpage discloses the same subject matter: "FS iControl's proprietary algorithms integrated with the Freedom Series Completion System ***transition the zipper valves from one well to the other, opening the second well and subsequently shutting-in the first well, all while pumping***." Ex.2001, 1 (emphasis added); Ex.2006, ¶¶120-24. The continuous pumping webpage explains that the FS iControl "automat[es] the hydraulic gate valves" and shows a graph depicting the operation of the wells during continuous pumping, including the opening a second well (in red) while a first well (in orange) is still open:

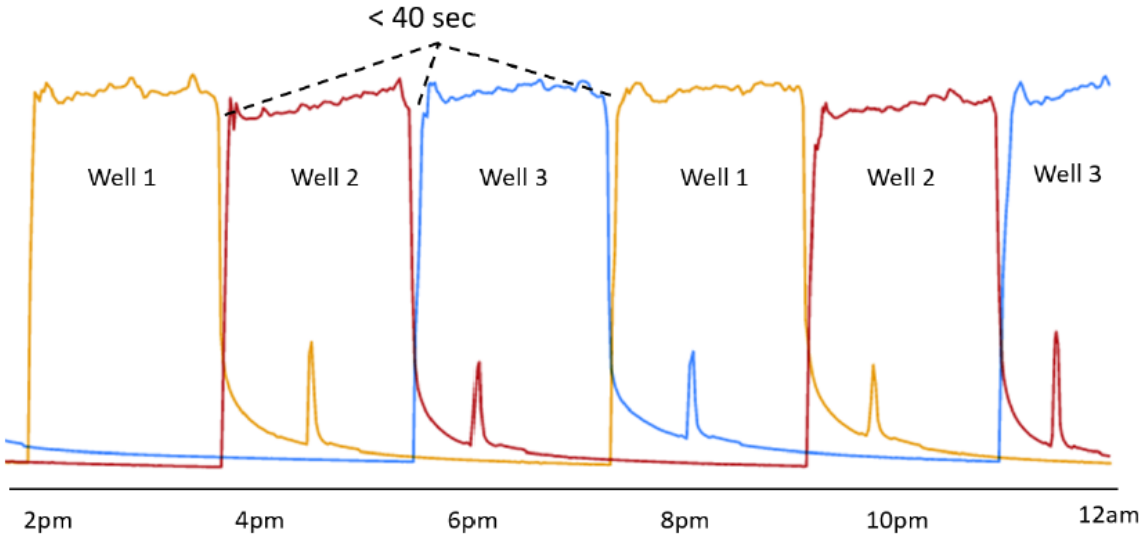

Ex.2001, 2; Ex.2006, ¶¶120-24. Patent Owner's continuous pumping webpage thus discloses opening a valve associated with a second well as cited in Krupa.

Limitations [1.7]/[8.9] recite "(e) during pumping of the fluid into the second well via the second valve, closing the first valve associated with the first well[.]" The Petition contends that:

> *Krupa* further discloses "closing the first set of valves to stop pumping the fluids into the first well and isolating and continuously pumping the fluids into the second well." [0005]. "Once injection is established and pressure has stabilized in both the first wellhead assembly 201a and the second wellhead assembly 201b, the first set of valves 221, 222 may be closed remotely to shut in the first wellhead assembly 201a[.]

Petition, 26 (citing Ex.1003, [0005], [0043], Fig. 2C). Patent Owner's continuous pumping webpage, however, also discloses this subject matter. Specifically, "FS

iControl's proprietary algorithms integrated with the Freedom Series Completion System transition the zipper valves from one well to the other, ***opening the second well and subsequently shutting-in the first well, all while pumping***." Ex.2001, 1 (emphasis added); Ex.2006, ¶¶120-24. The continuous pumping webpage explains that the FS iControl "automat[es] the hydraulic gate valves," and the graph depicts the opening of well 2 (in red) and the subsequent closing of well 1 (in orange):

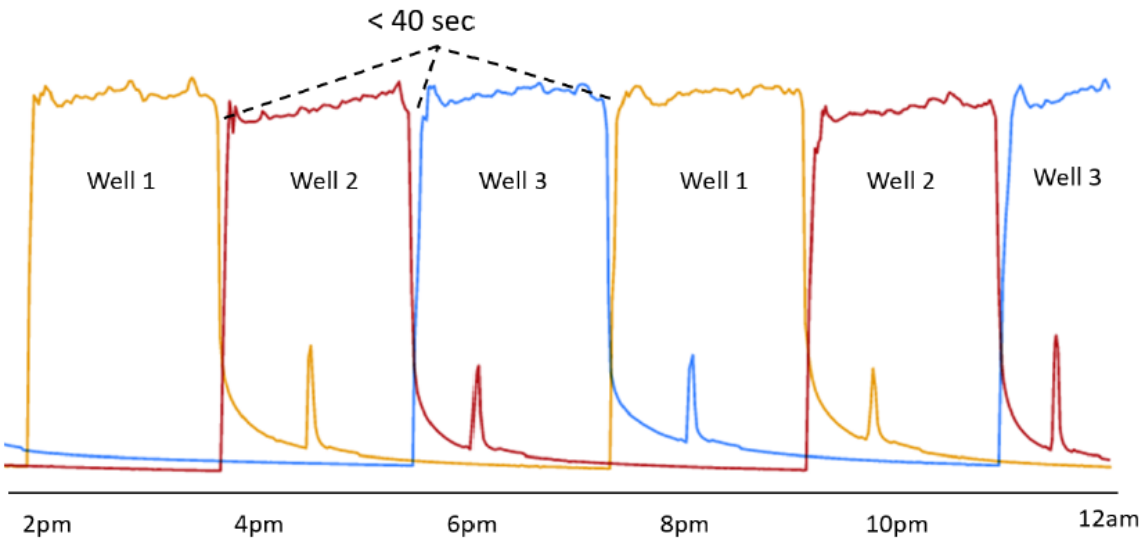

Ex.2001, 2; Ex.2006, ¶¶120-24. Patent Owner's continuous pumping webpage thus discloses closing a valve of a first well while pumping in a second well as relied on in Krupa.

Limitations [1.8]/[8.10] recite "wherein, during each of steps (a), (b), (c), (d), and (e), fluid is continuously pumped to the first valve, the second valve, or both the first valve and the second valve." The Petition relies upon Krupa's

teaching that "[w]ith fluid flowing continuously in the manifold connection 210a, different sets of valves (*e.g.*, 221, 223) may be opened to allow the fluid from the manifold connection to flow into respective wellhead assemblies (*e.g.*, 201a, 201b) to 'provide continuous hydraulic fracturing pumping operations between the wellhead assemblies 201a-201d.'" Petition, 27–28 (citing Ex.1003, [0043], [0046], Fig. 2A). The Petition asserts that "Krupa discloses such CP operations 'may essentially eliminate the time required to transition[.]'" Petition, 28 (quoting Ex.1003, [0058]). Again, the Patent Owner's webpage discloses this same subject matter.

Patent Owner's webpage discloses the same continuous pumping as Krupa. Patent Owner's webpage explains that "FS iControl's proprietary algorithms integrated with the Freedom Series Completion System transition the zipper valves from one well to the other, opening the second well and subsequently shutting-in the first well, ***all while pumping***." Ex.2001, 1 (emphasis added); *see also id.* ("The Freedom Series Completion System with FS iControl . . . allow[s] your pumps to ***run continuously***[.]" and "***Pump continuously*** stage after stage"). Patent Owner's webpage also discloses the same instant transitions as Krupa. The webpage states that "[t]he Freedom Series Completion System with FS iControl enables instant transitions between stages." Ex.2001, 1; *see also id.* at 2 ("Instant Transition Time" and "[r]educes transition time to zero."). The graph on the webpage shows

pumping occurring continuously between first and second wells (shown in orange and red, respectively) to achieve transition times of less than 40 seconds between stages measured at treatment pressure:

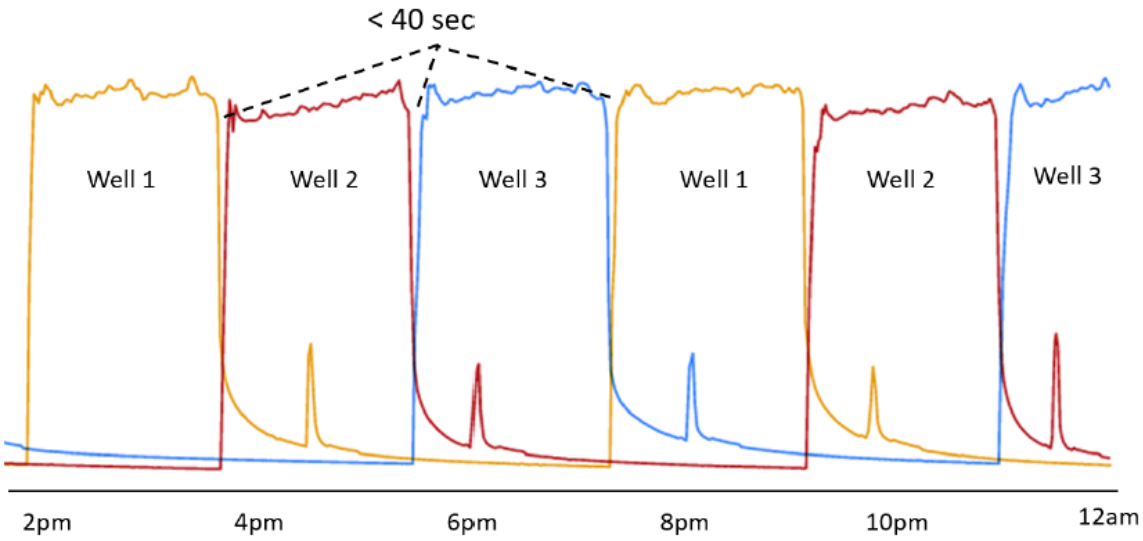

Ex.2001, 2; Ex.2006, ¶¶120-24. Accordingly, Downing's continuous pumping webpage discloses the same continuous pumping and rapid transitions as Krupa.

Similar to limitations [1.5]/[8.7] and [1.7]/[8.9], limitations [15.4]/[25.6] recite "opening the first valve associated with the first well to permit pumping of fluid into the first well via the first valve; and closing the second valve associated with the second well." The Petition avers that:

> *Krupa* discloses a hydraulic fracturing system may be automated to "perform [CP] processes in a hydraulic fracturing operation … for continuous non-stop pumping for one or more wells." [0017]. For example, fracturing operations may be

> transitioned "from one well to a second well." [0038], [0046]. Hydraulic fracturing is permitted in a (first) well by opening an associated set of valves and pumping fluids into the first well from a manifold. [0005]. Hydraulic fracturing is stopped in another (second) well by closing the associated set of valves to stop fluid flow into the second well. [0005].

Petition, 38. For the same reasons discussed with respect to limitations [1.5]/[8.7] and [1.7]/[8.9], Patent Owner's continuous pumping webpage discloses the same subject matter in Krupa through its disclosure of opening the second well (i.e., the cited "first" well in Krupa) and closing the first well (i.e., the cited "second" well in Krupa). *See also* Ex.2006, ¶¶120-24.

Limitations [15.5]/[25.7] are similar to limitations [1.8]/[8.10] in that they are directed to continuously pumping fluid. In particular, limitations [15.5]/[25.7] recite "wherein, during step (b), hydraulic fracturing fluid is continuously pumped to the first and second valves via a hydraulic manifold[.]" The Petition contends that:

> Krupa discloses flowing fluid continuously through a manifold connection (e.g., 210a in Figure 2A) to different sets of valves (e.g., first valves 221/222 and second valves 223/224). [0043]. Valves are opened to allow the fluid from the manifold to flow into respective wellhead assemblies (e.g., 201a, 201b). . . . Continuous hydraulic fracturing pumping operations

> are thereby conducted between multiple wellhead assemblies by continuously pumping hydraulic fracturing fluid from a manifold to the valves associated with each wellhead assembly.

Petition, 39 (citing Ex.1Ex.1003, [0005], [0043], [0046], Fig. 2A). For the same reasons discussed with respect to limitations [1.8]/[8.10], Patent Owner's webpage discloses the same subject matter related to "continuously pumping" as discussed in Krupa. Ex.2006, ¶¶120-24.

Accordingly, Patent Owner's continuous pumping webpage discloses the same subject matter the Petition relies on in Krupa.

iv. Without Krupa's continuous pumping disclosure, Petitioner fails to carry its burden.

Each independent claim in the Krupa Grounds recites limitations related to continuous pumping. Because (i) Patent Owner publicly disclosed continuous pumping—via information obtained from an inventor—before any filing date associated with Krupa, and (ii) the publicly-disclosed subject matter is the same subject matter relied upon in Krupa by the Petition, the continuous pumping disclosure of Krupa is disqualified as prior art under § 102(b)(2)(B). Without this disclosure, the Petition fails to address all the claim limitations of the independent claims and Petitioner cannot establish a reasonable likelihood of prevailing on the Krupa Grounds.

B. Grounds 3 and 5: Denial is warranted under 35 U.S.C. § 325(d).

The Board should deny institution under § 325(d) because the only remaining grounds in the Petition—Grounds 3 and 5—are based upon the "same or substantially the same art previously [] presented to the Office," and Petitioner failed to demonstrate "that the Office erred in a manner material to the patentability of the challenged claims." *Advanced Bionics, LLC v. Med-El Electromedizinishe Geräte GmbH*, IPR2019-01469, Paper 6 at 8 (Feb. 3, 2020) (precedential) ("*Advanced Bionics*"). Under the first prong of the *Advanced Bionics* framework, Petitioner's primary reference in Grounds 3 and 5, U.S. Patent Pub. No. 2017/0275980 to Kajaria (Ex.1004), was used to reject the pending claims during prosecution, and the secondary reference, U.S. Patent Publication No. 2007/0023184 to Jackson (Ex.1005), is cumulative to the reference the Examiner previously combined with Kajaria, U.S. Patent Pub. No. 2014/0352968 to Pitcher (Ex.2006). Despite this, Petitioner does not allege the Examiner erred in any way, and thus has failed to meet its burden under the second prong of *Advanced Bionics*. *Id*. at 9. When petitioners fail to meet this burden, "the Director generally will exercise discretion not to institute *inter partes* review." *Id*. at 8-9. "At bottom, this framework reflects a commitment to defer to previous Office evaluations of the evidence of record unless material error is shown." *Id*.

1. Prosecution History of the ’779 Patent

The ’779 Patent issued on August 2, 2022, from Application No. 17/388,716 (“’716 Application”), filed July 29, 2021, as a continuation-in-part application of Application No. 17/319,854.

During prosecution, the Examiner rejected pending independent claims 15 and 23 as being anticipated by Kajaria. Ex.1009, 112-115. With respect to pending dependent claims 17 and 25, the Examiner combined Kajaria with a second reference, U.S. App. Pub. 2014/0352968 to Pitcher, because Kajaria “does not specifically disclose measuring a flow rate of the fluid being pumped into the second well.” *Id*. at 115. In making the combination, the Examiner stated that “it would be obvious to one of ordinary skill in the art before the effective filing date to modify the method and system disclosed by Kajaria to measure a flow rate of the fluid being pumped into the second well in view of the teachings of Pitcher.” *Id*.

In response to these rejections, Downing amended the rejected claims to recite the subject matter that the Examiner indicated was allowable: “determining that the flow rate of the fluid being pumped into the first well is below a flow rate threshold and has been below the flow rate threshold for a threshold amount of time.” Ex.1009, 116, 81-103. The claims were subsequently allowed. *Id*. at 49-52.

Petitioner is improperly asking the Board for a "redo" of this prosecution without explaining why, as explained below.

2. *Advanced Bionics* Part One

i. The Examiner rejected the pending claims in view of Kajaria.

There is no dispute Kajaria was "previously [] presented to the Office" for the purposes of § 325(d). *See* Petition, 86 ("the Office considered Kajaria during prosecution of '779"). Petitioner acknowledges that the Examiner evaluated Kajaria and used its disclosure to reject the pending claims. *Id*. at 55 ("The Examiner stated that Kajaria disclosed or rendered obvious all limitations of the Challenged Claims except for flowrate threshold limitations."). In fact, Petitioner explicitly relies on the Examiner's reasoning throughout its discussion of Kajaria. *See, e.g.,* Petition, 55 ("As the Examiner explained…"). In many instances, the Petition points to the same paragraphs and figures of Kajaria as the Examiner. *Compare, e.g.,* Petition, 56-57, 62 (citing Fig. 4 of Kajaria), 59-60 (citing [0028] of Kajaria); 61-65 (citing [0035] of Kajaria); 62 (citing Fig. 1 of Kajaria), *with* Ex.1009, 112-113 (citing Fig. 1, Fig. 4, [0028], [0034], and [0035] of Kajaria). Petitioner even identifies the same deficiencies in Kajaria as the Examiner:

Examiner	Petition
"Kajaria does not teach or suggest determining that the flow rate of the fluid being pumped into the first well is below a flow rate threshold and has been below the flow rate threshold for a threshold amount of time." Ex.1009, 116.	"Kajaria discloses every limitation of Claim 1 except for explicitly determining a measured flowrate into the first well is below a flowrate threshold for a threshold amount of time." Petition, 65.

Kajaria was thus thoroughly analyzed and applied by the Examiner during prosecution of the '779 Patent. The Petition simply recycles the Examiner's analysis, and thus institution over the same base reference is not an efficient use of Board or party resources. *See Bio-Rad Labs., Inc. v. 10X Genomics, Inc.*, IPR2019-00566, Paper 21 at 12 (July 22, 2019) ("In balancing the appropriate factors, we are not persuaded that adjudicating a dispute over the same base reference…that was considered and substantively applied by the Examiner is an efficient use of Board or party resources.").

ii. Petitioner's secondary reference, Jackson, is cumulative to the Examiner's secondary reference, Pitcher.

During prosecution, the Examiner combined Kajaria with a secondary reference, Pitcher, for its description of flow rate measurement. Ex.1009, 115. The Petition merely swaps out Pitcher for a different reference not before the Examiner, Jackson, that similarly discloses flow rate measurement. Petition, 57-58. Replacing

Pitcher with the substantially similar disclosure of Jackson does not support institution because neither describe the subject matter the Examiner found allowable: "determining that the flow rate of the fluid being pumped into the first well is below a flow rate threshold and has been below the flow rate threshold for a threshold amount of time." Ex.1009, 116; *see Intelligent BioSystems, Inc. v. Illumina Cambridge Ltd*., IPR2013-00324, Paper 19 at 6–7 (Nov. 21, 2013) (informative) (institution denied where the cited references contained "substantially the same" teachings as the references in the first petition).

Jackson's cumulative nature is illustrated by the language in the Petition that closely mirrors the language in the Office Action. The Examiner and Petitioner respectively rely upon Pitcher and Jackson to disclose flow rate measurement, and both assert that such disclosure would have been obvious to combine with Kajaria:

Examiner's application of Pitcher	**Petitioner's application of Jackson**
"Pitcher teaches *measuring a flow rate of the fluid being pumped into the well*" Ex.1009, 115.	"It would have been obvious to a POSITA to *measure flowrate of fluid being pumped into a well*, as Jackson discloses." Petition, 57
"[I]t would have been obvious…to modify the method and system disclosed by Kajaria to measure a flow rate of the fluid being pumped into the	"It would have been obvious … to combine Jackson and Kajaria to measure flowrate of fluid being pumped into a well." Petition, 58.

second well in view of the teachings of Pitcher." Ex.1009, 115.	

Petitioner's use of the same disclosure (flow rate measurement) in the same way (in combination with Kajaria) is, by definition, cumulative. *See Motorola Mobility LLC v. Maxell, LTD*, IPR2022-01287, Paper 11 at 18-19 (Feb. 2, 2023) ("Petitioner is therefore relying on [the second prior art reference] to teach the same thing as [the first prior art reference], making Petitioner's use of [the second prior art reference] for this purpose cumulative to [the first prior art reference].").

Petitioner further relies upon Jackson for its alleged disclosure of flowrate thresholds. Petition, 59-62. But Pitcher also discloses flowrate thresholds—which the Examiner no doubt considered in her evaluation. For example, Pitcher includes detailed description about calculating a desired "volumetric flow rate" (denoted as Q in the below equation) and a desired "fracturing time" (denoted as t):

> Further, full flow (e.g., twenty-five barrels per minute) can be provided to the well 14 and a desired fracturing time for a given zone can be calculated based on:
>
> $V_{frac} = Qt + V_p$,
>
> where V_{frac} the volume of fracturing fluid to pump into the fracturing zone, Q is the volumetric flow rate at which fluid is pumped into the well 14 from the fracturing manifold 44, t is the desired fracturing time for the zone, and V_p is the volume of

> the passageway (i.e., fluid conduit) from the ball launcher 40 (of the well 14) to the far end of the zone being fractured.

Ex.2008, [0036]. Once calculated, Pitcher teaches using the desired flow rate and desired time as thresholds to trigger a subsequent fracturing stage. Ex.2008, [0037]. Specifically, the next stage is triggered when it is determined (via a sensor) that the flow rate is at the desired flow rate for the desired amount of time:

> The manifold valve 48 that controls flow to the well 12 can then be adjusted to set the flow rate (which can be measured by a sensor 62) to the calculated amount. Once the desired fracturing time has elapsed, the ball launchers 40 may be activated to drop balls 42 into the wells 12 and 14 to isolate the next fracturing stages for stimulation.

Ex.2008, [0037]. The Examiner correctly recognized, however, that Pitcher's disclosure is not sufficient to meet the specific claim requirement of "determining that the flow rate of the fluid being pumped into the first well is ***below a flow rate threshold*** and ***has been below the flow rate threshold for a threshold amount of time***," as indicated in the reasons for allowance. Ex.1009, 116.

The portions of Jackson regarding flowrate thresholds relied upon in the Petition "teach[] no more than what a reasonable examiner would consider to be taught by" Pitcher, and are thus cumulative. *See Roku, Inc. v. Universal Elecs., Inc.*, IPR2019-01619, Paper 11 at 16 (Apr. 2, 2020). In fact, Jackson's disclosure is

even ***more limited*** than Pitcher's relative to the claim requirements. For example, Petitioner points to Jackson's disclosure of a "relaxation" stage for claim elements [1.3] and [1.4]. Petition, 59-61. But this portion of Jackson fails to describe even the baseline requirement of "*determining*" the flow rate to ensure that it's "*under*" a threshold for a certain amount of time. Instead, it appears that the "inflow of frac gas" is set to a diminished level at the beginning of the relaxation period and that "pressure" (not flow rate) is the monitored parameter determined to be at a "lesser value P_2" over the "time period t_2":

> Following this rise, the period of relaxation R1 may occur in which the inflow of frac gas may be greatly diminished or stopped to a rate of less than 300 scm, and **during which the <u>pressure</u> is permitted to decline over a time period, t2** of less than 24 hours or possibly less than 12 hours and in one embodiment less than one hour, **to some lesser value P_2**.

Ex.1005, [0061]. Moreover, this disclosure in Jackson is limited to operations in a ***single*** well, whereas Pitcher at least describes a multi-well system (like the one claimed by the '779 patent). *Compare* Ex.2008, [0030]-[0031], [0037]-[0038], *with* Ex.1005, [0051]-[0052], Figs. 1-2..

Accordingly, Jackson is even less relevant to the '779 patent claims and "adds no teaching that was not before the Examiner." *Dr. Reddy's Labs. S.A., v. Indivior UK Ltd.*, IPR2019-00328, Paper 21 at 16 (June 3, 2019). Given that the

Office already considered and discarded the better, but still deficient, disclosure of Pitcher, the Board need not—and should not—waste its resources reconsidering Jackson.

For these reasons, Petitioner presents the same art (Kajaria) and substantially the same art (Jackson) that was before the Examiner during prosecution—thereby satisfying part one of the *Advanced Bionics* framework.[5]

3. *Advanced Bionics* Part Two

i. The Petition does not allege material error.

Petitioner asks the Board to reevaluate the same and substantially the same references previously considered by the Office without explaining why. The Petition contains no showing—or even an allegation—that the Office erred "in a manner material to the patentability of challenged claims," as required under the second prong of *Advanced Bionics*. Instead, Petitioner simply states:

> Although the Office considered *Kajaria* during prosecution of '779, no ground in this Petition was considered. Denial of institution under 35 U.S.C. § 325(d) is unwarranted.

[5] The Petition adds a third reference, Martino, in Ground 5 to solely address the allegedly "boilerplate computer language" in Limitations 8.1/25.2 and 8.2/25.3. Petition, 85-86. Martino thus is not relevant to the § 325(d) analysis.

Petition, 86. Petitioner has thus failed to its burden under *Advanced Bionics*.

The Board has repeatedly held that a petitioner's failure to address material error by the Office warrants a denial under § 325(d). *Advanced Bionics*, 8-9 ("If the petitioner fails to show that the Office erred, the Director may exercise his discretion not to institute inter partes review….If a condition in the first part of the framework is satisfied and the petitioner fails to make a showing of material error, the Director generally will exercise discretion not to institute inter partes review."); *Google LLC v. Valtrus Innovations Ltd.*, IPR2022-01197, Paper 9 at 23 (Jan. 3, 2023) ("Petitioner does not address the Office's consideration of this reference with any degree of specificity…providing a mere two sentence assertion regarding § 325(d)"); *see also Darfon Elecs. Corp. v. Shipman*, IPR2022-01008, Paper 11 at 14 (Dec. 2, 2022); *Wolfspeed, Inc. v. The Trustees of Purdue Univ.*, IPR2022-00761, Paper 9 at 14-15 (Nov. 8, 2022).

The burden to establish error falls on Petitioner, as Petitioner is requesting the Board to institute in the face of countervailing policy objectives—conservation of resources and finality of prior Office determinations. *See CSL Behring Gmbh v. Shire ViroPharma, Inc.*, IPR2019-00459, Paper 8 at 22 (July 2, 2019). Moreover, when it is reasonably foreseeable that Patent Owner will raise a § 325(d) argument, the Board requires Petitioner to "comprehensively" address such issues in the Petition. *See, e.g.*, *Progenity, Inc. v. Natera, Inc.*, IPR2021-00266, Paper 7 at 5

(Apr. 1, 2021) (denying preliminary reply on § 325(d) because "[w]e find [§ 325(d)] issues to have been foreseeable and that they could have been comprehensively addressed by Petitioner in the Petition(s)"); *Edwards Life Sci. Corp. v. Boston Sci. Scimed, Inc.*, IPR2017-00444, Paper 8 at 3 (May 22, 2017) (denying preliminary reply on § 325(d) because "Petitioner had the opportunity to address the issue in the Petition, and … may not neglect to address an issue with the expectation that additional briefing will be permitted in reply.").

Here, it was entirely foreseeable that Patent Owner would raise a § 325(d) argument. Petitioner recycled the primary reference used to reject the pending claims and simply swapped out the Examiner's secondary reference with a substantially similar reference. Moreover, the complete prosecution history was known to Petitioner at the time the Petition was filed, and no relevant facts have changed. Petitioner should not be permitted to neglect this obvious issue in the Petition and lay behind the log while Patent Owner fully develops the issue in the Preliminary Response. *Edwards Life Sci. Corp.*, IPR2017-00444, Paper 8 at 3 ("Petitioner … may not neglect to address an issue with the expectation that additional briefing will be permitted in reply.").

Because Petitioner does not satisfy, or even attempt to satisfy, its burden of providing material error by the Office, institution should be denied.

ii. The Petition does not present any evidence that would warrant reconsideration.

Petitioner does not point to any additional evidence or facts that would warrant reconsideration of the Examiner's decision to allow the '779 patent over Kajaria and Pitcher. *See Becton, Dickinson & Co. v. B. Braun Melsungen AG,* IPR2017-01586, Paper 8 at 17-18 (Dec. 15, 2017) (factor (f)).

As noted above, Petitioner points to substantially the same portions of Kajaria that the Examiner considered. As also noted above, Jackson is cumulative to Pitcher and does not add any significant evidence or facts that would warrant reconsideration. Further, Petitioner's expert declaration does not provide any additional evidence or facts about Kajaria or Jackson that would warrant reconsideration. The declaration, like the Petition, points to the same portions of Kajaria that the Examiner allegedly considered and relies on portions of Jackson that are substantially similar to portions of Pitcher. *See generally* Ex.1002, ¶¶ 282-489. Without more, Petitioner cannot prove material error simply by pointing to expert testimony that disagrees with the Examiner. *See Ivantis, Inc. v. Sight Scis., Inc.*, IPR2022-01530, Paper 14 at 18, 23, 29 (March 27, 2023) ("Here, [the expert witness] looked at substantially the same references as the Examiner and comes to a different conclusion, but that is not compelling, especially when there is no explanation how the Examiner erred.").

For these reasons, the Board should exercise its discretion under § 325(d) and deny institution. Institution would waste Board resources revisiting issues that the Examiner conclusively addressed during prosecution. *See, e.g., Aquestive Therapeutics, Inc. v. Neurelis, Inc.*, IPR2019-00450, Paper 8 at 22 (Aug. 1, 2019).

III. THE '779 PATENT

A. Technological background

Hydraulic fracturing is a technique employed in the oil-and-gas industry to enhance the extraction of hydrocarbons from drilled wells. Ex.2006, ¶33. Hydraulic fracturing is used to fracture the geology in the formation by pumping high pressure fluid into the well, allowing oil and gas to flow out of the fractures into the well. *Id*., ¶¶61-63. In many operations where hydraulic fracturing is employed, numerous wells are spaced closely apart on the same "pad" or wellsite to increase extraction from the reservoir. *Id*., ¶51.

One relatively recent improvement to the hydraulic fracturing process is known as "zipper fracturing." *Id*., ¶¶12, 97-98. Originally, hydraulic fracturing was accomplished one stage at a time in a single well before moving on to the next well. *Id*., ¶¶67, 104. Zipper fracturing improved this process through use of a hydraulic fracturing manifold or "zipper manifold." *Id*., ¶¶12, 94-95. In this method, the pressure pumps are connected to a common manifold that distributes fluid to each of a series of connected wells. *Id*. Each well's connection to the

zipper manifold includes valves that can be closed to isolate the well. *Id*., ¶94. Thus, pumping into a given well may be accomplished by closing the valves to all but one well, so that fluid is directed to the desired well. *Id*.

Hydraulic fracturing and perforating operations on a particular well may take hours to perform, resulting in significant idle time for pumping and wireline personnel while one crew waits for the other to finish. *Id*., ¶95. Zipper fracturing reduced this downtime by allowing one well to be fractured while the next well in the series is perforated. *Id*. When both operations are complete, the newly fractured well can be isolated, fluid may be rerouted through the zipper manifold to the newly perforated well for fracturing, and wireline operations can begin immediately in the next well in the series. *Id*. In this manner, operations move through a series of wells in assembly-line fashion, cutting the time to complete wells nearly in half.

Figure 1A of the ’779 Patent shows a diagram of a conventional zipper fracturing setup:

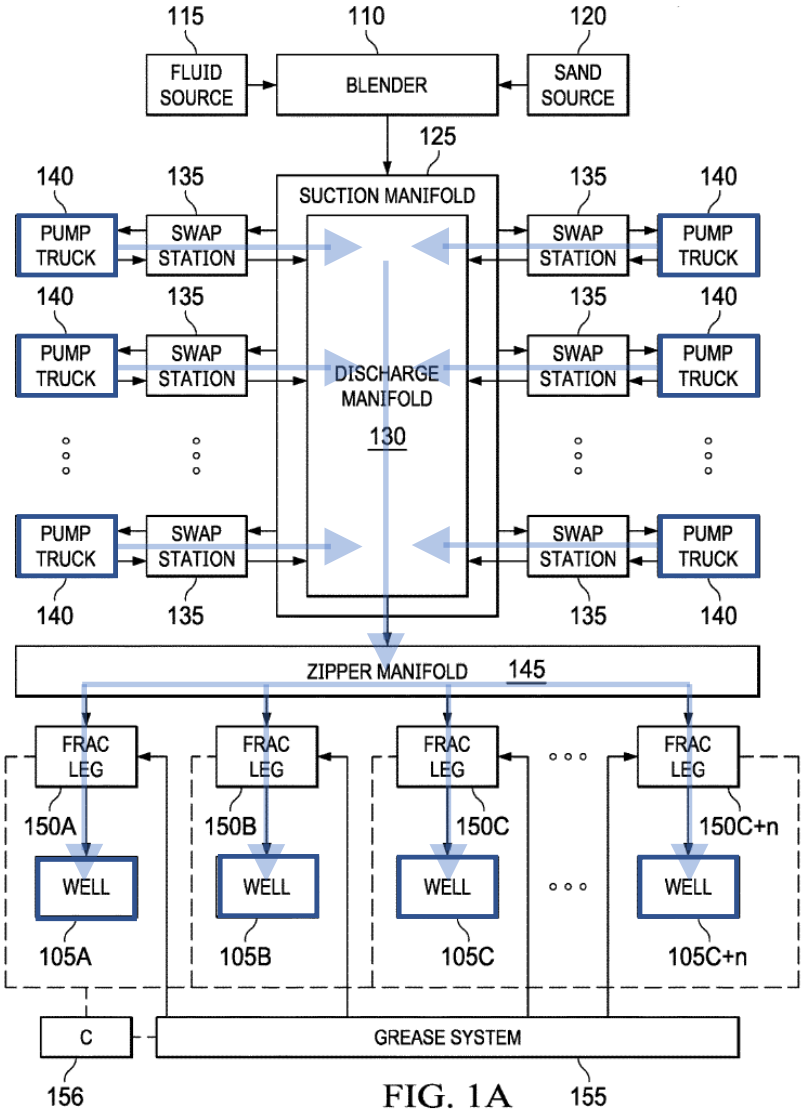

FIG. 1A

Ex.1001, Fig. 1A (annotated).

The dramatic reduction in non-productive time enabled by zipper fracturing resulted in its widespread adoption in the industry. *See, e.g.*, Ex.1008, 1. But operators accustomed to significant downtime between pumping operations had to adapt to the relatively fast-paced pumping schedule in zipper fracturing operations. *Id.*, 2. One Journal of Petroleum Technology article from 2014 described this

quicker schedule as "continuous" because of the little downtime between pumping operations—and noted these pumping operations resulted in increased wear on pumps and left little time for maintenance. *See id*.

But the description of these previous zipper-based pumping operations as "continuous" was a misnomer—these operations were not truly continuous because they still required at least a 15-minute break in stimulation operations during the transition between wells. Ex.1008, 2 ("[W]hen doing zipper fracturing the break in stimulation operations may only last 15 minutes as workers switch from one well to another."); Ex.2006, ¶¶167-168. This delay was due to the time it took to shut down the pumps, close the valve to the first well, open the valve to the second well, and start the pumps back up to begin fracturing. Ex.2006, ¶95. One of the reasons this conventional sequence still involved downtime—despite the industry's focus on efficiency—was because of safety concerns. *Id*., ¶¶105-107. The traditional understanding was that this transition downtime was necessary to safely operate the valves. *Id*. Downing's novel continuous pumping system and method described in the '779 Patent upended this traditional understanding.

B. Summary of the '779 Patent

The '779 Patent issued on August 2, 2022, and is entitled "Hydraulic Fracturing Plan and Execution of Same." It describes and claims a novel process for transitioning between fracturing different wells attached to the same zipper

manifold, called a continuous pumping swap or "CP swap." As described in the specification, a CP swap allows for non-stop pumping throughout such a transition by opening a valve to the second well while still pumping into a first well, and then closing the valve to the first well:

> As shown in FIGS. 16D and 16E, executing the CP swap from hydraulically fracturing (at the step 262) the n_1 well (e.g., well 105D) to hydraulically fracturing (at the step 262) the n_1+1 well (e.g., well 105B) transitions the zipper valves from one well to the other, opening the second well and subsequently shutting-in the first well, all while pumping.

Ex.1001, 14:41-46.

As shown below in '779 Patent Figure 16D, during the CP swap "[t]he transition [between wells] is instantaneous and the total time between stages measured at treatment pressure is less than 20 seconds (as fast as 19 seconds in some instances)." Ex.1001, 14:47-49.

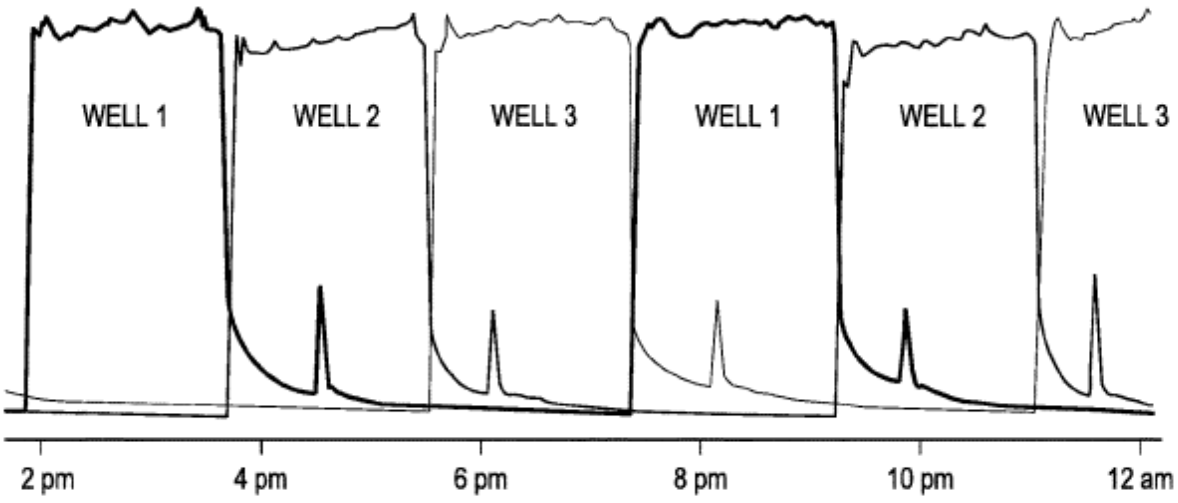

FIG. 16D

The ’779 Patent distinguishes this inventive CP swap process from a conventional “regular swap.” *See, e.g.*, *id.* at 13:31 (“determining whether to permit a ***regular swap*** or a ***CP swap***”). Conventional swaps begin by closing the valve on one well before opening the valve on the next well. With both valves closed, pumping operations must cease. When the valve on the second well is opened, pumping resumes, but a delay occurs while the pumps are primed (in some instances) and returned to operating pressure.

The ’779 Patent’s claimed CP swap method thus enables hydraulic fracturing pumps to run continuously during multi-well zipper fracturing stimulations, thereby avoiding downtime in pumping operations associated with conventional methods.

IV. CLAIM CONSTRUCTION

No claim construction is necessary to deny institution. Patent Owner's arguments for denial do not hinge on the outcome of an actual controversy about construction of a claim term. *Vivid Techs., Inc. v. Am. Sci. & Eng'g, Inc*., 200 F.3d 795, 803 (Fed. Cir. 1999). As explained throughout this Preliminary Reply, the defects in the Petition are readily identifiable without defining any specific claim term.

V. THE PETITION FAILS TO SHOW A REASONABLE LIKELIHOOD OF SUCCESS ON THE MERITS

A. The Krupa Grounds do not establish a reasonable likelihood of success.

As discussed in Section II.A, the Krupa Grounds are dead on arrival because Krupa is not prior art. Petitioner cannot show a reasonable likelihood of success because the Petition does not show—or even allege—that the subject matter relied upon in Krupa is supported by the Krupa Provisional. And, as discussed in Section II.A.2, even if Krupa is prior art, key portions of Krupa that Petitioner relies upon in every Krupa Ground would be disqualified as prior art under § 102(b)(2)(B).

Even ignoring all these defects, the Krupa Grounds still fall short on the merits, as described below.

1. <u>Ground 1</u>: Krupa does not anticipate the Challenged Claims.

Each of the Challenged Claims of the ’779 Patent requires measuring a flow rate and determining whether that flow rate has satisfied one or more conditions. Specifically, independent claims 1 and 8 require “*measuring a flow rate*” of fluid being pumped into a first well and determining that the measured flow rate “*is below a flow rate threshold and has been below the flow rate threshold for a threshold amount of time*” or instructions for performing those steps. Independent claims 15 and 25 similarly require “*measuring a flow rate of the fluid being pumped into the second well*” and determining whether the measured flow rate has satisfied one or more flow rate conditions or instructions for performing those steps.

Krupa does not disclose determining whether the measured flow rate satisfies any threshold or condition. For each of the claim elements related to flow-rate measurements, the Petition relies on Krupa’s disclosures of (1) reducing a pump rate from a “full pump rate” to a lower pump rate and (2) moving to a next step of the fracturing process “[o]nce a pressure has stabilized at the reduced pump rate.” Petition, 23–25, 38, 40 (citing Ex.1003, [0042]). But the Petition points to no disclosures in Krupa suggesting a flow rate is compared to any threshold. Instead, Krupa teaches determining that ***pressure*** has stabilized—which is facially different than determining that a different variable, ***flow rate***, has been ***below the***

flow rate threshold for a threshold amount of time or satisfies a condition.

Accordingly, Ground 1 fails.

i. Krupa does not disclose determining that the flow rate of the fluid being pumped into the first well is below a flow rate threshold and has been below the flow rate threshold for a threshold amount of time (Limitations 1.3, 1.4, 8.4, 8.5)

Each of the challenged independent claims 1 and 8 requires "*determining that the flow rate of the fluid being pumped into the first well is below a flow rate threshold and has been below the flow rate threshold for a threshold amount of time*." Krupa does not disclose making any such determination.

Despite focusing on Krupa's disclosures of adjusting a ***pump rate*** in its analysis of the steps of measuring the flow rate and comparing it to a threshold in claim limitations 1.2–1.3 and 8.3–8.4, Petitioner shifts its focus to ***pressure*** measurements in its analysis of limitations 1.4 and 8.5. Specifically, Petitioner asserts that Krupa's disclosure of moving to a next step "[o]nce pressure has stabilized at the reduced pumping rate" meets the claims' requirement of determining that the flow rate has been "*below the flow rate threshold for a threshold amount of time*" because checking pressure stability allegedly "necessarily and thus inherently includes waiting a threshold amount of time …." Petition, 25 (citing Ex.1003, [0042]).

This theory fails for at least two reasons. ***First,*** limitations 1.4/8.5 require determining that the ***same*** flow rate measured and compared to a threshold in limitations 1.2–1.3/8.3–8.4 is below the threshold for a threshold amount of time. *Digital Biometrics, Inc. v. Identix, Inc*., 149 F.3d 1335, 1345 (Fed. Cir. 1998) ("[T]he same word appearing in the same claim should be interpreted consistently."). Despite relying on pump rates for limitations 1.2–1.3/8.3–8.4, Petitioner switches gears for limitations 1.4/8.5 and instead relies upon a determination of pressure stabilization. This inconsistent mapping alone sinks the Krupa Grounds.

Second, and more importantly, Krupa's pressure stabilization technique measures the wrong variable over time—it measures pressure instead of flow rate. Specifically, even if Petitioner is right that "[m]aking sure the 'pressure has stabilized at the reduced pump rate' necessarily and thus inherently includes waiting a threshold amount of time," Krupa still measures pressure over time and not "*flow rate*" as required by the claims. This distinction is clear based on Krupa's statement that pressure is monitored "***at*** the reduced pump rate." Ex.1003, [0042]. In other words, the "reduced pump rate" is a ***static parameter*** and "pressure" is the ***variable being monitored*** over time to ensure it has stabilized. Ex.2007, ¶143. The claims require the opposite— "flow rate" is the variable being monitored over time

to determine whether it is below a threshold amount for a threshold amount of time.

Petitioner's alternative theory that "a POSITA would have immediately recognized that measuring changes in flow rate over time is a common and necessary part of a zipper or [CP] fracturing operation" also fails to establish that Krupa discloses limitations 1.4 and 8.5. *See* Petition, 25. Although Petitioner alleges that measuring changes in flow rate during fracturing is "necessary" (and thus inherent), the claim doesn't require measuring changes, it requires something different: determining that the flow rate has been "*below the flow rate threshold for a threshold amount of time*." Petitioner fails to present any evidence that Krupa inherently teaches the actual requirements of the claim, thus cannot meet its burden of showing that Krupa anticipates claims 1 and 8 or any of their dependent claims.

ii. Krupa does not disclose determining that the measured flow rate has or has not satisfied one or more conditions (Limitations 15.6–15.7 and 25.8–25.9)

The Petition similarly fails to show that Krupa discloses determining whether a flow rate satisfies one or more conditions, as required by claims 15 and 25. Petitioner again relies on Krupa's disclosure of reducing a pump rate from a "full pump rate" to a reduced rate, such as 5-15 bbl/min. Petition, 40 (citing Ex.1003, [0042]). According to Petitioner, "[a] POSITA would understand Krupa's flowrate limits as examples of flowrate conditions indicating when to move to a

next step in a fracturing operation, which would include opening the first valve before closing the second valve." *Id.*

But the Petition does not cite any disclosure of "flowrate limits." As discussed above, the 5–15 bbl/min. range is not a "limit" of any kind. Instead, Krupa provides the 5–15 bbl/min. range as an ***example*** of a range the reduced pump rate ***might*** fall into. *See* Ex.1003, [0043]. And even if the exemplary range could be considered a "limit," Krupa does not disclose determining whether a measured flow rate falls into it. *See id.*

Because Krupa does not disclose measuring a flow rate or determining whether that flow rate has satisfied any conditions, Petitioner cannot meet its burden of showing that it is likely to succeed on Ground 1.

2. <u>Ground 2</u>: Krupa does not render the Challenged Claims obvious.

The Petition fails to set out a *prima facie* case that Krupa renders the Challenged Claims obvious. The Petition does not explain why a POSITA would be motivated to modify Krupa to perform the steps of the Challenged Claims. Instead, it makes only conclusory statements that Krupa renders certain claim limitations obvious and relies solely on its expert declaration to explain those statements. Petitioner cannot incorporate its obviousness arguments into the

Petition by reference, and the Board should deny Ground 2 on that basis alone. *See Parus Holdings, Inc. v. Google LLC*, 70 F.4th 1365, 1370 (Fed. Cir. 2023).

The Petition's sole argument for how Krupa renders the Challenged Claims obvious despite not disclosing the steps of the limitations outlined above is that "determining whether a measured flowrate of fluid being pumped into a well is below a threshold would have been obvious in view of Krupa's disclosure of 'a reduction in flow indicating the end of the stage, and the subsequent move to the next step executed by the software application.'" Petition, 29. But the Petition fails to explain ***why*** it would have been obvious to implement this step in Krupa's system—and thus lacks the "articulated reasoning with some rational underpinning" required to establish the legal conclusion of obviousness. *KSR v. Teleflex Inc*., 550 U.S. 398, 418 (2007). As discussed above, the embodiment the Petition relies on uses a determination that ***pressure*** has stabilized to trigger the next step in the fracking operation. *See* Ex.1003, [0042]. The Petition fails to explain why a POSITA would use flow-rate measurement in addition to or instead of the pressure stabilization determination Krupa already discloses.

The Petition also does not make any argument that Krupa renders obvious the requirements of limitations 1.4 and 8.5 of "*determining that the flow rate . . . has been below a flow rate threshold for a threshold amount of time*," despite Krupa's failure to disclose that limitation. For these reasons, the Petition fails to

establish that Petitioner is likely to succeed in showing that Krupa renders the Challenged Claims obvious.

3. Ground 4: The combination of Krupa and Jackson does not render the Challenged Claims obvious.

Petitioner also fails to show that a POSITA would have been motivated to combine Krupa and Jackson. Krupa describes a multi-well system. Petitioner asserts that that "[a] POSITA would have been motivated to combine Jackson and Krupa's teachings to use Jackson's flowrate thresholds to determine the different stages of the fracturing job to move on to the next well." Petition, 83. But Petitioner fails to explain why a POSITA would be motivated to use Jackson's flow-rate and time thresholds for moving to the next stage in a ***single-well*** fracturing operation to determine how to switch between wells in a ***multi-well*** fracturing operation. *See id.*, 83–84.

Instead, Petitioner asserts only that "[a]s Krupa and Jackson both 'disclose similar functions of thresholds[,]'" a POSITA "would recognize that combining the teachings of Krupa and Jackson is a simple substitution of one known element for another (e.g., specific thresholds) to obtain predictable results." Petition, 84. But this conclusory assertion is insufficient to establish that a POSITA would have a reasonable expectation of success using Jackson's thresholds for moving between stages in pumping a single well for a different purpose in a multi-well system. Ex.

2006, ¶¶194-96, 199. As Mr. Hughett explains, determining whether to perform a continuous-pumping swap in a multi-well system requires different considerations than determining when to move to the next stage in a single-well operation. *Id*.

Further, even if Petitioner could establish that a POSITA would recognize that Jackson's flow-rate and time thresholds ***could*** be used in Krupa, that is not sufficient to show that a POSITA ***would*** have been motivated to combine the references as asserted. "[O]bviousness concerns whether a skilled artisan not only *could have made* but *would have been motivated to make* the combinations or modifications of prior art to arrive at the claimed invention." *Belden Inc. v. Berk-Tek LLC*, 805 F.3d 1064, 1073 (Fed. Cir. 2015) (emphasis original). Critically absent from the Petition is ***any*** explanation of ***why*** a POSITA would have been motivated to use Jackson's thresholds for the claimed purposes in Krupa.

Accordingly, Petitioner has not established that it is likely to succeed on Ground 4.

B. The Kajaria Grounds do not establish a reasonable likelihood of success.

1. <u>Ground 3</u>: The combination of Kajaria and Jackson does not render the Challenged Claims obvious.

The combination of Kajaria and Jackson does not render the Challenged Claims obvious. While Kajaria discloses a multi-well system in which valves control the fluid flow to each well, it does not discuss or contemplate swapping

pumping from one well to another by opening and closing valves in the ***particular sequence*** required by the claims. Jackson, which does not contemplate pumping into multiple wells at all, does not cure this deficiency.

Unable to show that either reference discloses or suggests the ’779 Patent’s inventive methods and systems for swapping between wells while continuously pumping, Petitioner appears to suggest that it is sufficient that an operator ***could*** have used Kajaria’s system to perform the claimed steps. But the Challenged Claims are not directed to general fracturing hardware that is hypothetically capable of being configured to perform the claimed functions. Instead, they recite specific and novel method steps that manipulate valves to swap from fracturing one well to fracturing a different well based on whether a measured flow rate has met one or more specific conditions (or computer readable mediums specifically programmed to perform those method steps).

Indeed, Patent Owner does not contest that multi-well fracturing equipment existed in the prior art. But as Dr. Hughett explains, the particular methods for swapping between wells while continuously pumping recited in the Challenged Claims had not been practiced before the invention of the ’779 Patent. Ex.2006, ¶¶107-109, 160-75.

Because Kajaria and Jackson lack any teaching or suggestion of the novel, continuous-pumping swapping procedure recited in the Challenged Claims, Petitioner cannot establish that it is likely to prevail on Ground 3.

i. The combination of Kajaria and Jackson does not disclose or render obvious opening a second valve associated with a second well during pumping of the fluid into the first well via the first valve (Limitations 1.5 and 8.7)

Claim limitations 1.5 and 8.7 require "*during pumping of the fluid into the first well via the first valve, opening a second valve associated with a second well*." Although, as Petitioner points out, Kajaria discloses a system for fracturing a multi-well site that includes valves for controlling the flow into each well, Kajaria lacks any disclosure of manipulating the valves in any particular sequence, much less in the specific sequence claimed: "*during pumping of the fluid into the first well via the first valve, opening a second valve associated with a second well*."

As a method claim, claim 1 requires ***actually performing*** the step of "*opening a second valve associated with a second well during pumping of the fluid into the first well*"—not just equipment capable of performing that step. *See, e.g., Schumer v. Lab'y Computer Sys., Inc.,* 308 F.3d 1304, 1309, n.3 (Fed. Cir. 2002) ("A method claim is infringed only by one practicing the patented method. Similarly, a method claim will be anticipated by an earlier device ***performing all of the operative steps of the method***."). Likewise, claim 8 requires a computer-

readable medium actually programmed with instructions for performing this step. *See* Claim 8 ("*a plurality of instructions stored on the non-transitory computer readable medium and executable by one or more processors, wherein, when the instructions are executed by the one or more processors, the following steps are executed: . . . during pumping of the fluid into the first well via the first valve, opening a second valve associated with a second well*.").

Just as Petitioner cannot show anticipation of a novel computer software method simply by pointing to generic computer hardware, Petitioner cannot show anticipation of either claim simply by pointing to generic fracturing hardware. *See id.* A multi-well system does not in and of itself satisfy limitations 1.5 and 8.7 simply because it includes a valve associated with a well that an operator ***could*** open during pumping into a different well. *See id.*; *Schumer*, 308 F.3d at 309, n.3. Instead, the system must actually perform or be programmed to perform that action. *See Schumer*, 308 F.3d at 309, n.3.

Neither Kajaria nor Jackson disclose or suggest opening a valve to one well while pumping into another. Apparently recognizing this, Petitioner appears to suggest that Kajaria inherently discloses this step, asserting that a POSITA would understand that Kajaria's generic disclosure of "'continuously' directing flow between multiple wells 'simply by opening or closing the valves' associated with

each of the wells" would include opening a valve to a second well while fluid is being pumped into the first well. Petition, 63.

Inherency, however, requires a showing that "the missing descriptive matter is ***necessarily*** present in the thing described in the reference." *In re Robertson*, 169 F.3d 743, 745 (Fed. Cir. 1999) (citations omitted). Petitioner cites no evidence that "continuously directing flow between multiple wells" using valves ***necessarily*** includes opening a valve to one well while pumping into another beyond the conclusory testimony of its expert, Dr. Durham. Petitioner, 63 (citing Ex.1002, ¶307). But Dr. Durham fails to provide any evidence or explanation for ***why*** continuously pumping requires valves to two wells to be open at the same time. Ex.1002, ¶307. He simply asserts, without explanation, that "[i]n order for fluid to be 'continuously' pumped between the wells, it would be necessary to open the second valve while the previous valve is still open." *Id.*

Dr. Durham's conclusory testimony is entitled to no weight. *Xerox Corp. v. Bytemark, Inc*., IPR2022-00624, Paper 9 at 15-16 (August 24, 2022) (precedential); C.F.R. § 42.65(a). As the Board noted in *Xerox*, conclusory expert testimony is "particularly problematic in cases where, like here, expert testimony is offered not simply to provide a motivation to combine prior-art teachings, but rather to *supply a limitation missing from the prior art*." *Xerox*, Paper 9 at 16.

Petitioner's expert assumes without support that Kajaria's disclosure of "continuously" directing flow is equivalent to "continuously" pumping within the meaning of the '779 Patent. Ex.1002, ¶179. But Kajaria does not define or further describe "direct[ing] flow between wells continuously." *See* Ex.1004. Nor does it provide any description of transitioning between different wells without stopping pumping—or, indeed, any specifics at all about the process of transitioning between wells to be fractured. Thus, Petitioner's expert's assumption that Kajaria's single mention of "continuously directing flow between wells" refers to "continuous pumping" as disclosed in the '779 Patent appears to be based solely on hindsight.

As Dr. Hughett explains, a POSITA would have instead understood that Kajaria's ability to "direct flow between wells continuously" merely refers to the capability of a hydraulic fracturing manifold to provide fluid to the wells connected to the manifold in a ***more*** "continuous" manner than could prior single-well completion methods, which required disconnecting and rerigging the pressure lines to pump into different wells and thus involved significant non-pumping time. Ex.2006, ¶¶163-175 (citing Ex.1008, 2, which describes a "continuous" pumping operation that includes 15-minute gaps in pumping). Fracturing multiple wells without having to disconnect and rerig pressure lines would ***not*** require opening valves associated with a new well to be fractured before closing valves to the last

well to be fractured. *Id.* ¶¶174-75. Thus, Petitioner fails to establish that Kajaria discloses the step recited in limitations 1.5 and 8.7 either expressly or inherently.

Petitioner also makes no argument that Kajaria renders this step obvious—either alone or in combination with Jackson. Petitioner does not suggest any modification of Kajaria to include the recited sequence of opening and closing valves. Petition, 62–63. And Petitioner does not and could not cite Jackson for these limitations, as Jackson describes procedures for pumping into a ***single*** well and does not contemplate a multi-well system at all. *See id.;* Ex.1005.

Because Petitioner fails to establish that the combination of Kajaria and Jackson either discloses or renders obvious limitations 1.5 and 8.7, it cannot show that it is likely to succeed on Ground 3 with respect to claims 1 and 8 or their dependent claims.

ii. The combination of Kajaria and Jackson does not disclose or render obvious closing the first valve associated with the first well during pumping of the fluid into the second well via the second valve (Limitations 1.7 and 8.9)

Claim limitations 1.7 and 8.9 require "*during pumping of the fluid into the second well via the second valve, closing the first valve associated with the first well*." Petitioner fails to cite any disclosure of closing a valve to one well while pumping into another in either Kajaria or Jackson.

As with limitations 1.5 and 8.7, the Petition points to Kajaria's disclosure of a multi-well system with valves that control the flow to each well. Petition, 64, 67. But limitations 1.7 and 8.9, similar to limitations 1.5 and 8.7, require actually performing specific actions on those valves or a computer-readable medium with instructions to perform those actions. *See, e.g., Schumer*, 308 F.3d at 309, n.3.

Kajaria lacks any disclosure of closing a valve associated with one well while pumping into another, and its disclosure of general fracturing hardware does not satisfy limitations 1.7 and 8.9 limitations even if Kajaria's equipment ***could*** be programmed to perform the claimed steps. *See, e.g., Ricoh Co. v. Quanta Computer Inc.*, 550 F.3d 1325, 1335 (Fed. Cir. 2008) (quoting *In re Kollar*, 286 F.3d 1326, 1332 (Fed. Cir. 2002). ("[A] process 'consists of doing something, and therefore has to be carried out or performed.'").

As with limitations 1.5 and 8.7, Petitioner appears to suggest that Kajaria inherently discloses this step because a "POSITA would have understood that Kajaria's disclosure of 'continuously' directing flow between multiple wells and providing fluid into a well while stopping flow to another would include closing the first valve associated with the first well while fluid is being pumped into the second well." Petition, 64. But Petitioner again fails to point to any evidence that Kajaria's disclosure of "continuously directing flow between multiple wells and providing fluid into a well while stopping flow to another" would ***necessarily***

require closing the valve to one well while pumping into another and therefore cannot establish inherency. *Robertson*, 169 F.3d at 745; *see also* Ex.2006, ¶¶179.

The Petition also makes no argument and presents no evidence that Kajaria renders obvious performing the specific actions on the valves required by this step, either alone or in combination with Jackson. Accordingly, Petitioner has not established that it is likely to succeed on Ground 3 on claims 1 and 8 and their dependent claims.

iii. The combination of Kajaria and Jackson does not disclose or render obvious determining whether to open the first valve before closing the second valve in response to determining whether one or more flow-rate conditions are met (Limitations 15.6, 15.7, 25.8, and 25.9)

Claims 15 and 25 require determining whether to perform a continuous-pumping swap "in response to" a determination about whether a measured flow rate of fluid being pumped into a well meets one or more conditions. Specifically, both claims recite "*in response to determining that the flow rate measured at step (a) has satisfied one or more flow rate conditions, the first valve associated with the first well is opened at step (b) before the second valve associated with the second well is closed at step (b)*" ***or*** "*in response to determining that the flow rate measured at step (a) has not satisfied one or more flow rate conditions, the first valve associated with the first well is opened at step (b) during or after the second valve associated with the second well is closed at step (b)*."

Neither Kajaria nor Jackson disclose opening and closing valves in any specific sequence "*in response to*" a determination about whether a flow rate meets one or more conditions. While, as Petitioner points out, Kajaria includes statements that operators can rely on generic "monitoring equipment" to assist them in controlling various parameters while fracturing, Kajaria does not teach performing any specific valve operation in response to any measurement from that monitoring equipment, much less in response to a measured flow rate meeting one or more conditions. In fact, for the reasons described above in connection with limitations 1.5 and 8.7, Kajaria does not teach opening a valve to one well before closing the valve to a different well that is being treated at all, and it certainly does not disclose determining whether or not to do so based on flow rate conditions.

Jackson does not cure this deficiency. Petitioner relies on Jackson's disclosure of adjusting the flow rate into a ***single*** well when the rate reaches various "thresholds." Petition, 75. But adjusting the flow rate to meet thresholds is different from monitoring the flow rate and basing determinations about how to swap between wells on whether the monitored flow rate meets certain conditions. Jackson does not disclose a multi-well system at all, let alone using flow-rate thresholds or other conditions to determine how to swap from pumping into one well to pumping into a different well. *See* Ex.1005. Petitioner fails to provide any explanation for its assertion that the combination of Jackson and Kajaria makes it

obvious to use flow-rate data to determine when to switch from fracturing one well to another when ***neither*** Jackson nor Kajaria addresses using flow-rate conditions for that purpose—or indeed, discusses determining when to swap between wells at all. *See* Petition, 75.

Further, even if Petitioner had supported its assertion that Jackson and Kajaria would have made it obvious to use flow rate to determine "***when*** to switch from fracturing one well to another," that would not be sufficient to render claims 15 and 25 obvious. Both claims require using flow rate to determine not just when but ***how*** to swap from pumping into one well to pumping into another.

The Petition ***does not even allege*** that it would have been obvious to use flow rate to determine whether to open a first valve to permit pumping to a first well before closing second valve associated with a second well, as required by limitations 15.6 and 25.8. Petition, 75. As already noted, neither Kajaria nor Jackson teaches opening a first valve to permit pumping to a first well before closing second valve associated with a second well at all, and the Petition does not even attempt to explain why the references would nevertheless make it obvious to perform that specific operation based on flow-rate conditions. *See id.*

Nor does the Petition allege that the references would have made it obvious to choose ***not*** to open the first valve before closing the second valve based on one or more flow rate conditions ***not*** being met, as recited in limitations 15.7 and 25.9.

See id. Contrary to Petitioner's incorrect assertion, these elements do not "merely require[] opening a valve to a next well during or after closing a valve to another well" (Petition, 75); they require performing that action "*in response to determining that the flow rate measured at step (a) has not satisfied one or more flow rate conditions*."

Petitioner cites two disclosures in Kajaria relating to actions that Petitioner contends amount to opening a valve associated with a first well during or after closing a valve associated with a second well: (1) Kajaria's background disclosure of isolating wells on completion of a frac cycle then redirecting fluid to a different well and (2) pumping into one well while "simultaneously stopping flow" into another. Petition, 75–76 (citing Ex.1005, [0006], [0035]). But even if Petitioner is correct that these actions necessarily require performing the recited valve sequence, Petitioner does not even argue that Kajaria or Jackson teaches or suggests performing either action "in response to" one or more flow-rate conditions not being satisfied. *See id.*

Petitioner also cites its expert's unsupported assertion that a "POSITA would have known if the system of Kajaria determines that continuous pumping operations should not proceed, then the backup would, obviously, be to revert to conventional fracturing operations (i.e., opening the first valve after the second valve is closed)." Petition, 76 (citing Ex.1002, ¶¶363-366) (alterations omitted).

This contention is logically flawed because Kajaria does not disclose "continuous pumping" as the primary method of pumping. And because Kajaria does not teach continuous pumping as the primary swap method, it logically cannot teach or suggest a "conventional" swap as a backup. In any event, the Petition does not point to any disclosure in Kajaria of using flow-rate conditions to determine "that continuous pumping operations should not proceed" and provides no explanation for why using flow-rate conditions for that purpose would have been obvious. *See id.*

Because Kajaria and Jackson do not disclose or render obvious determining whether to perform a continuous-pumping swap in response to determining whether flow-rate conditions are met, Petitioner cannot establish that it is likely to succeed on Ground 3.

iv. The Petition fails to show that it would have been obvious to combine Kajaria and Jackson.

Petitioner has also not shown that a POSITA would have been motivated to combine Kajaria and Jackson to arrive at the claimed methods and devices. An obviousness determination requires finding "a motivation to combine accompanied by a reasonable expectation of achieving what is claimed in the patent-at-issue." *Intelligent Bio-Sys., Inc. v. Illumina Cambridge Ltd.*, 821 F.3d 1359, 1367 (Fed. Cir. 2016).

Petitioner's motivation-to-combine arguments are legally insufficient because Petitioner fails to support them with teachings from the references and instead relies only on conclusory expert testimony. *See Xerox*, Paper 9 at 15-16; 37 C.F.R. § 42.65(a). Kajaria does not disclose swapping from treating one well to treating another by performing the specific valve operations recited in the claims, and Petitioner does not even allege that Kajaria discloses using flow-rate conditions or thresholds to select which specific valve operation to use. Jackson does not disclose a multi-well system at all and instead deals with using various thresholds to control pumping into a single well. Nevertheless, Petitioner asserts that Jackson's disclosure of flow-related conditions and time as two of the many types of thresholds that operators could use to control pumping into a single well would have made it obvious to a POSITA to perform the claimed methods, which require using flow-rate and time thresholds to determine which of the valve operations recited in the claims swap between wells in Kajaria's system. *See* Petition, 65, 75–76.

Petitioner fails to show that a POSITA would have been motivated to apply Jackson's technique of using thresholds to mark transition points between the stages for fracturing a ***single well*** to determine how to switch between ***different*** wells. The only proof it offers is the conclusory testimony of its expert, who asserts without explanation that:

> It would be obvious to a POSITA to use the process of Jackson of using flowrate conditions to determine when to move a fracturing process to the next step in the method of Kajaria in order to allow for control of the fracturing operation, a stated objective of Kajaria, which may include opening a first valve to a first well before closing a second valve to a second well to 'continuously' pump fluid to the first and second wells, as suggested by Kajaria.

Ex.1002, ¶361; *see also* Ex.1002 ¶¶301, 304.

Petitioner cannot satisfy its burden of proving obviousness by employing "mere conclusory arguments." *In re Magnum Oil Tools Int'l, Ltd*., 829 F.3d 1364, 1380 (Fed. Cir. 2016). Instead, it must explain why a person of ordinary skill in the art would have combined or modified the prior art references. *In re Nuvasive, Inc.,* 842 F.3d 1376, 1382 (Fed. Cir. 2016). Petitioner's expert fails to explain ***why*** a POSITA would combine Jackson's single-well techniques with Kajaria's multi-well system to arrive at the Challenged Claims, and his testimony is therefore entitled to no weight. 35 C.F.R. § 42.65(a); *see also Platform Sci., Inc. v. XRS Corp*., IPR2021-00124, Paper 11 at 22-23, 40-41 (June 8, 2021) (denying institution when petitioner and its expert inappropriately rely on conclusory statements to allege obviousness).

Petitioner and its expert also fail to explain why a POSITA would have a reasonable expectation of success in applying Jackson's method of determining when to go to the next stage in fracturing a single well to determining how to swap between wells in a multi-well system. "[W]here a party argues a skilled artisan would have been motivated to combine references, it must show the artisan would have had a reasonable expectation of success from doing so." *Arctic Cat Inc. v. Bombardier Recreational Prod. Inc*., 876 F.3d 1350, 1360–61 (Fed. Cir. 2017) (internal quotations omitted). The parameters and conditions associated with changing stages in a single well and swapping between wells in a multi-well system are vastly different. Ex. 2006, ¶¶194-96. As such, Petitioner had the burden to provide evidence and explanation that parameters and conditions associated with changing ***stages*** in a single well would apply to the different operation of changing ***between*** multiple wells. The Petition contains no such showing.

Accordingly, Petitioner has failed to carry its burden.

2. <u>Ground 5</u>: The combination of Kajaria, Jackson, and Martino does not render the Challenged Claims obvious.

Martino does not cure the deficiencies of Kajaria and Jackson. For the reasons explained in connection with Ground 3, the proposed combination of Kajaria and Jackson does not disclose performing the particular valve operations recited in limitations 1.5, 1.7, 8.7, 8.9, 15.6, and 25.8 or using flow-rate conditions

to determine how to swap from pumping into one well to pumping into another as required by limitations 15.6–15.7 and 25.8–25.9. Martino does not cure these deficiencies, and Petitioner does not allege that it does. *See* Petition, 85–86. Petitioner relies on Martino solely for its disclosure of using computers to "control valves to adjust/control well-system fluid flow," as required by limitations 8.1, 8.2, 25.2 and 25.3. *Id.*

Accordingly, Ground 5 similarly fails to meet the threshold for institution.

III. CONCLUSION

For the foregoing reasons, Patent Owner requests that institution be denied.

Respectfully submitted,

/Scott T. Jarratt/
Scott T. Jarratt
Lead Counsel for Patent Owner
Registration No. 70,297

Dated: March 8, 2024
HAYNES AND BOONE, LLP
2801 N. Harwood St., Suite 2300
Dallas, Texas 75201
Customer No. 27683

CERTIFICATE OF WORD COUNT

Pursuant to 37 C.F.R. § 42.24(d), Patent Owner hereby certifies, in accordance with and reliance on the word count provided by the word-processing system used to prepare this Preliminary Response, that the number of words in this paper is 13,625. This word count excludes the table of contents, table of authorities, mandatory notices under §42.8, certificate of service, certificate of word count, signature block, and appendix of exhibits. *See* 37 C.F.R. §42.24(c).

/Scott T. Jarratt/
Scott T. Jarratt
Lead Counsel for Patent Owner
Registration No. 70,297

CERTIFICATE OF SERVICE

The undersigned certifies that, in accordance with 37 C.F.R. § 42.6(e), service was made on Petitioner as detailed below.

Date of service March 8, 2024

Manner of service Electronic Service: terry@obwb.com; margonis@obwb.com; cooper@obwb.com; witbeck@obwb.com; schechter@obwb.com; OBWB-IWS-Downing@obwb.com

Documents served **Patent Owner Preliminary Response; Exhibit List and Exhibits Ex.2001 – Ex.2008**

Persons served Tammy J. Terry
Lisa E. Margonis
Califf T. Cooper (*pro hac vice*)
Laura J. Witbeck
Peter C. Schechter
OSHA BERGMAN WATANABE & BURTON LLP
1100 Louisiana Street, Suite 4900
Houston, TX 77002

/Scott T. Jarratt/
Scott T. Jarratt
Lead Counsel for Patent Owner
Registration No. 70,297