US009889066B2

(12) **United States Patent**
Danby et al.

(10) **Patent No.: US 9,889,066 B2**
(45) **Date of Patent: Feb. 13, 2018**

(54) **MASSAGING DEVICE HAVING A HEAT SINK**

(71) Applicant: **Good Fortune 5, LLC**, Studio City, CA (US)

(72) Inventors: **Philip C. Danby**, Key Biscayne, FL (US); **John Charles Danby**, Witham (GB)

(73) Assignee: **Good Fortune 5, LLC**, Studio City, CA (US)

(*) Notice: Subject to any disclaimer, the term of this patent is extended or adjusted under 35 U.S.C. 154(b) by 409 days.

(21) Appl. No.: **14/317,573**

(22) Filed: **Jun. 27, 2014**

(65) **Prior Publication Data**

US 2015/0005682 A1 Jan. 1, 2015

Related U.S. Application Data

(60) Provisional application No. 61/841,693, filed on Jul. 1, 2013.

(51) **Int. Cl.**
A61H 23/00 (2006.01)
A61H 23/02 (2006.01)

(52) **U.S. Cl.**
CPC . ***A61H 23/0254*** (2013.01); *A61H 2201/0153* (2013.01); *A61H 2201/0157* (2013.01); *A61H 2201/1215* (2013.01); *A61H 2201/149* (2013.01); *A61H 2201/1418* (2013.01); *A61H 2201/1664* (2013.01); *A61H 2201/501* (2013.01); *A61H 2201/5005* (2013.01); *A61H 2201/5015* (2013.01); *A61H 2201/5035* (2013.01); *A61H 2201/5038* (2013.01); *A61H 2201/5097* (2013.01)

(58) **Field of Classification Search**
CPC A61H 23/00; A61H 23/004; A61H 23/006; A61H 23/0254
See application file for complete search history.

(56) **References Cited**

U.S. PATENT DOCUMENTS

784,024 A		3/1905	Barrett et al.	
799,881 A		9/1905	Wells	
1,339,179 A	*	5/1920	Elmen	A61H 23/0254 601/108
1,612,981 A		1/1927	Mraula	
1,657,765 A	*	1/1928	Pasque	A61H 23/0254 310/50
1,978,223 A		10/1934	Parker	
3,030,647 A		4/1962	Peyron	

(Continued)

FOREIGN PATENT DOCUMENTS

CA	1042745 A	11/1978	
CN	1149446 A	5/1997	

(Continued)

Primary Examiner — Justine Yu
Assistant Examiner — Timothy Stanis
(74) *Attorney, Agent, or Firm* — Calfee, Halter & Griswold LLP

(57) **ABSTRACT**

Exemplary embodiments of massaging devices are disclosed herein. One exemplary embodiment includes a piston having a longitudinal axis, a massaging head connected to the piston, a motor located on a first side of the longitudinal axis and a handle located on a second side of the longitudinal axis. A drive mechanism for moving the piston and massage head is also included.

18 Claims, 7 Drawing Sheets

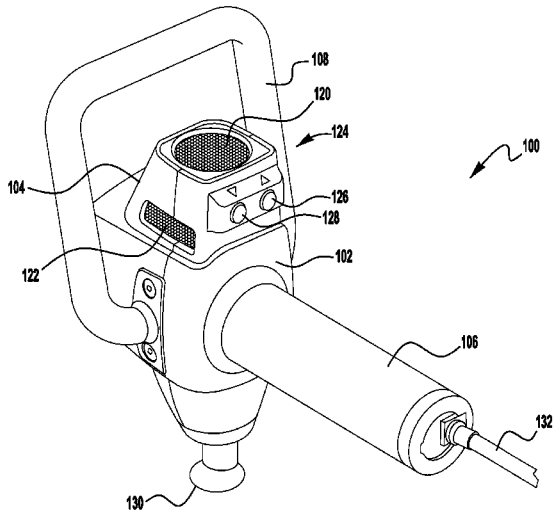

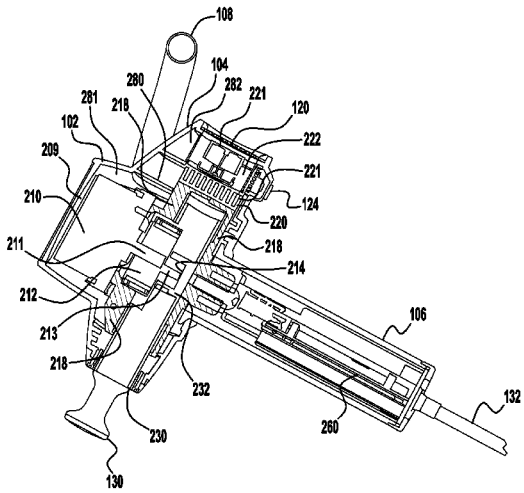

(56) **References Cited**

U.S. PATENT DOCUMENTS

3,494,353 A 2/1970 Marich
3,710,785 A 1/1973 Hilger
3,841,321 A 10/1974 Albach et al.
3,845,758 A 11/1974 Anderson
3,920,291 A * 11/1975 Wendel D01H 7/045 384/230
3,968,789 A 7/1976 Simoncini
3,993,052 A 11/1976 Miyahara
4,088,128 A 5/1978 Mabuchi
4,162,675 A 7/1979 Kawada
RE30,500 E 2/1981 Springer et al.
4,412,535 A 11/1983 Teren
4,505,267 A 3/1985 Inada
4,513,737 A 4/1985 Mabuchi
4,523,580 A 6/1985 Tureaud
4,549,535 A 10/1985 Wing
4,730,605 A 3/1988 Noble et al.
4,827,914 A 5/1989 Kamazawa
4,841,955 A 6/1989 Evans et al.
4,858,600 A 8/1989 Gross et al.
5,063,911 A 11/1991 Teranishi
5,065,743 A 11/1991 Sutherland
5,140,979 A * 8/1992 Nakagawa A61H 23/0218 128/907
5,159,922 A 11/1992 Mabuchi et al.
5,215,078 A 6/1993 Fulop
5,305,738 A 4/1994 Shimizu
5,311,860 A 5/1994 Doria
5,364,223 A 11/1994 Bissex
5,415,621 A 5/1995 Campbell
5,447,491 A 9/1995 Bellandi
5,489,280 A 2/1996 Russell
D367,712 S 3/1996 Young
D373,640 S 9/1996 Young
5,602,432 A 2/1997 Mitzutani
5,632,720 A 5/1997 Kleitz
5,656,018 A 8/1997 Tseng
5,725,483 A 3/1998 Podolsky
5,803,916 A 9/1998 Kuznets et al.
5,843,006 A 12/1998 Phillips et al.
5,925,002 A 7/1999 Wollman
5,951,501 A 9/1999 Griner
6,102,875 A 8/2000 Jones
6,123,657 A 9/2000 Ishikawa et al.
6,165,145 A 12/2000 Noble
6,170,108 B1 * 1/2001 Knight A46B 13/008 15/29
D437,713 S 2/2001 Young
D438,309 S 2/2001 Young
6,228,042 B1 5/2001 Dungan
6,231,497 B1 5/2001 Souder
D455,837 S 4/2002 Kim
6,375,609 B1 4/2002 Hastings et al.
6,402,710 B1 6/2002 Hsu
6,432,072 B1 * 8/2002 Harris A61H 23/0254 601/101
6,440,091 B1 8/2002 Hirosawa
6,461,377 B1 10/2002 An
6,478,755 B2 11/2002 Young
6,494,849 B2 12/2002 Kuo
6,585,667 B1 7/2003 Muller
6,616,621 B1 9/2003 Kohr
6,656,140 B2 12/2003 Oguma et al.
6,682,496 B1 1/2004 Pivaroff
6,758,826 B2 7/2004 Luettgen et al.
6,805,700 B2 10/2004 Miller
6,832,991 B1 12/2004 Inada et al.
6,866,776 B2 3/2005 Leason et al.
6,979,300 B1 12/2005 Julian et al.
6,994,679 B1 2/2006 Lee
7,033,329 B2 4/2006 Liao
7,041,072 B2 5/2006 Calvert
7,083,581 B2 8/2006 Tsai
7,125,390 B2 10/2006 Ferber et al.
7,128,722 B2 10/2006 Lev et al.
7,211,057 B2 5/2007 Gleason et al.
7,229,424 B2 6/2007 Jones et al.
7,238,162 B2 7/2007 Dehli
7,264,598 B2 9/2007 Shin
7,270,641 B2 9/2007 Glucksman et al.
7,282,037 B2 10/2007 Cho
7,306,569 B2 12/2007 LaJoie et al.
7,322,946 B2 1/2008 Lev et al.
7,335,170 B2 2/2008 Milne et al.
7,354,408 B2 4/2008 Muchisky
7,470,242 B2 12/2008 Ferber et al.
7,507,198 B2 3/2009 Ardizzone et al.
7,517,327 B1 4/2009 Knight
7,597,669 B2 10/2009 Huang
7,634,314 B2 12/2009 Applebaum et al.
7,927,294 B2 4/2011 Kamimura et al.
7,976,485 B2 7/2011 Huang
8,052,625 B2 11/2011 Tsai et al.
8,092,407 B2 1/2012 Tsukada et al.
8,192,379 B2 6/2012 Huang
8,282,583 B2 10/2012 Tsai
8,317,733 B2 11/2012 Chen et al.
2002/0058892 A1 5/2002 Young
2003/0060741 A1 3/2003 Park
2003/0130602 A1 7/2003 Chang
2003/0195438 A1 10/2003 Petillo
2003/0195443 A1 * 10/2003 Miller A61H 23/02 601/108
2005/0015030 A1 1/2005 Bousfield et al.
2005/0096571 A1 5/2005 Miki
2005/0096682 A1 5/2005 Daffer
2006/0074360 A1 4/2006 Yu
2006/0178715 A1 * 8/2006 Ahn A61H 39/002 607/96
2007/0179414 A1 * 8/2007 Imboden A61H 19/00 601/72
2008/0214968 A1 9/2008 Milne et al.
2008/0234611 A1 9/2008 Sakai et al.
2008/0306417 A1 12/2008 Imboden et al.
2009/0182249 A1 7/2009 Sakai et al.
2009/0306577 A1 12/2009 Akridge et al.
2010/0228168 A1 9/2010 Xu et al.
2010/0274162 A1 10/2010 Evans
2011/0106067 A1 5/2011 Geva et al.
2012/0253245 A1 10/2012 Stanbridge
2012/0259255 A1 10/2012 Tomlinson et al.
2013/0006040 A1 1/2013 Lee
2014/0094724 A1 * 4/2014 Freeman A61H 31/006 601/41

FOREIGN PATENT DOCUMENTS

CN 1228299 A 9/1999
CN 2412567 Y 1/2001
EP 0040053 A1 11/1981
EP 0572506 B1 12/1993
EP 0666071 A1 8/1995
FI 903376 A 12/1991
GB 191209026 A 3/1913
GB 191509508 A 6/1916
GB 188946 A 11/1922
GB 213117 A 3/1924
JP S54110058 A 8/1979
JP H04250161 A 9/1992
JP H053903 A 1/1993
JP H0751393 A 2/1995
JP H0866448 A 3/1996
JP H08131500 A 5/1996
JP 2002218780 A 8/2002
JP 2003230613 A 8/2003
JP 2004024523 A 1/2004
JP 2004141568 A 5/2004
JP 2007044319 A 2/2006
JP 2010075288 A 4/2010
JP 2009291451 A 1/2013
KR 200000043488 A 7/2000
KR 20030008342 A 1/2003
KR 100785097 B1 12/2007

(56) **References Cited**

FOREIGN PATENT DOCUMENTS

KR	20090128807	A	12/2009
KR	101007827	B1	1/2011
RU	2053754	C1	2/1996
RU	2464005	C1	10/2012
WO	9214435	A1	9/1992
WO	9625908	A1	8/1996
WO	03006102	A2	1/2003
WO	2011122812	A2	10/2011

* cited by examiner

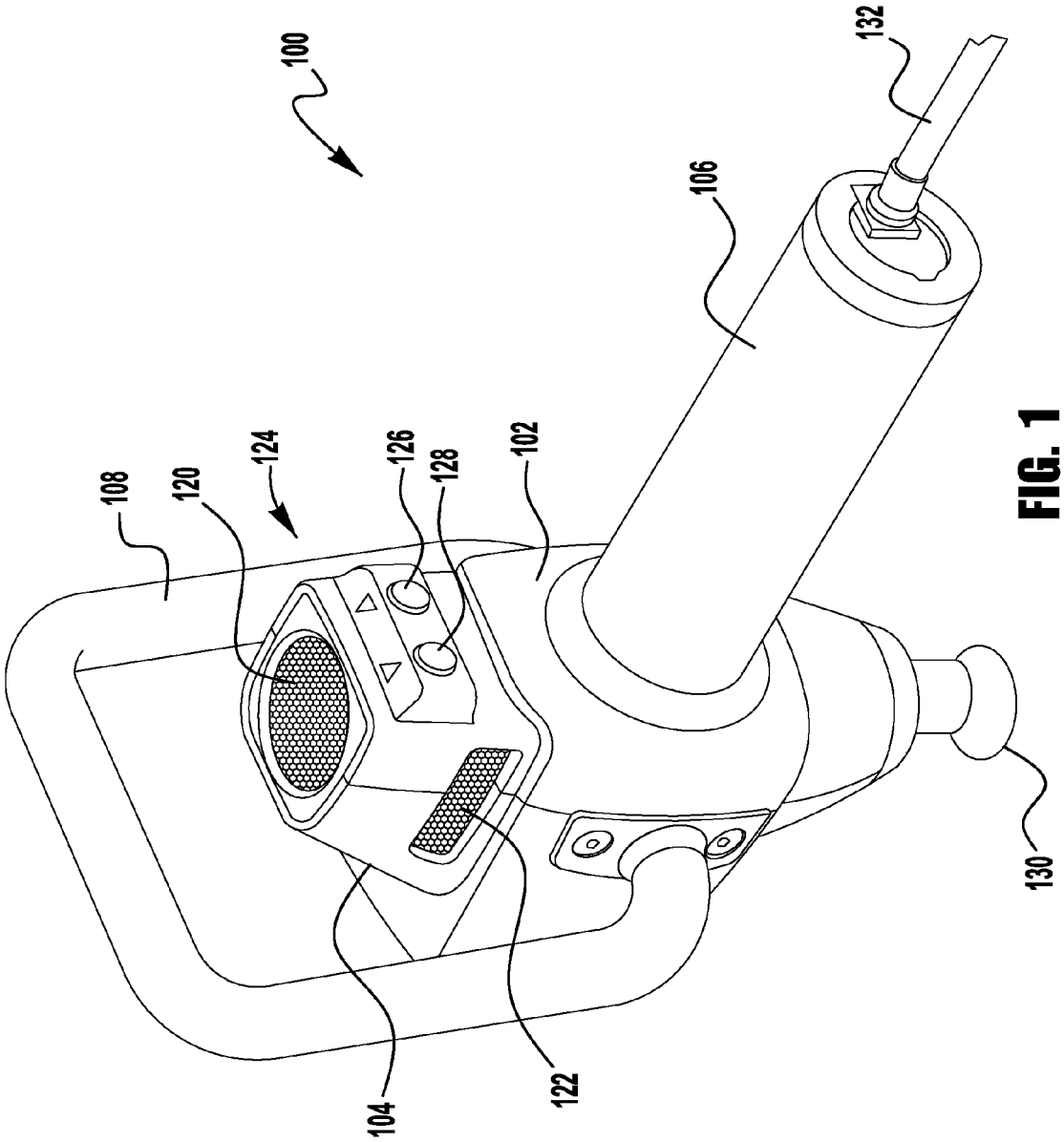

FIG. 1

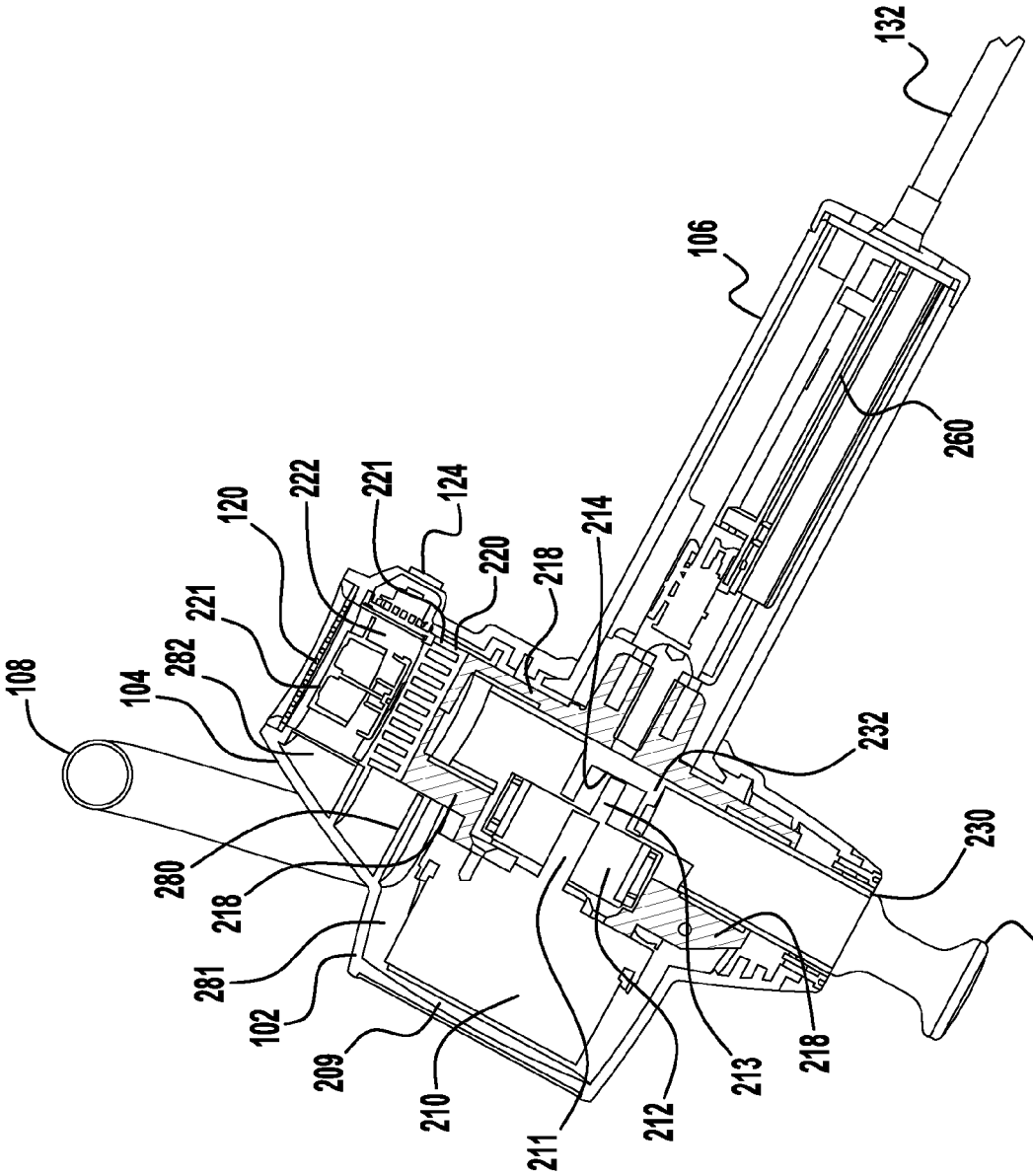
108
104
282
221
120
222
221
124
220
218
214
106
132
260
280
218
281
102
209
210
211
212
213
218
232
230
130

FIG. 2

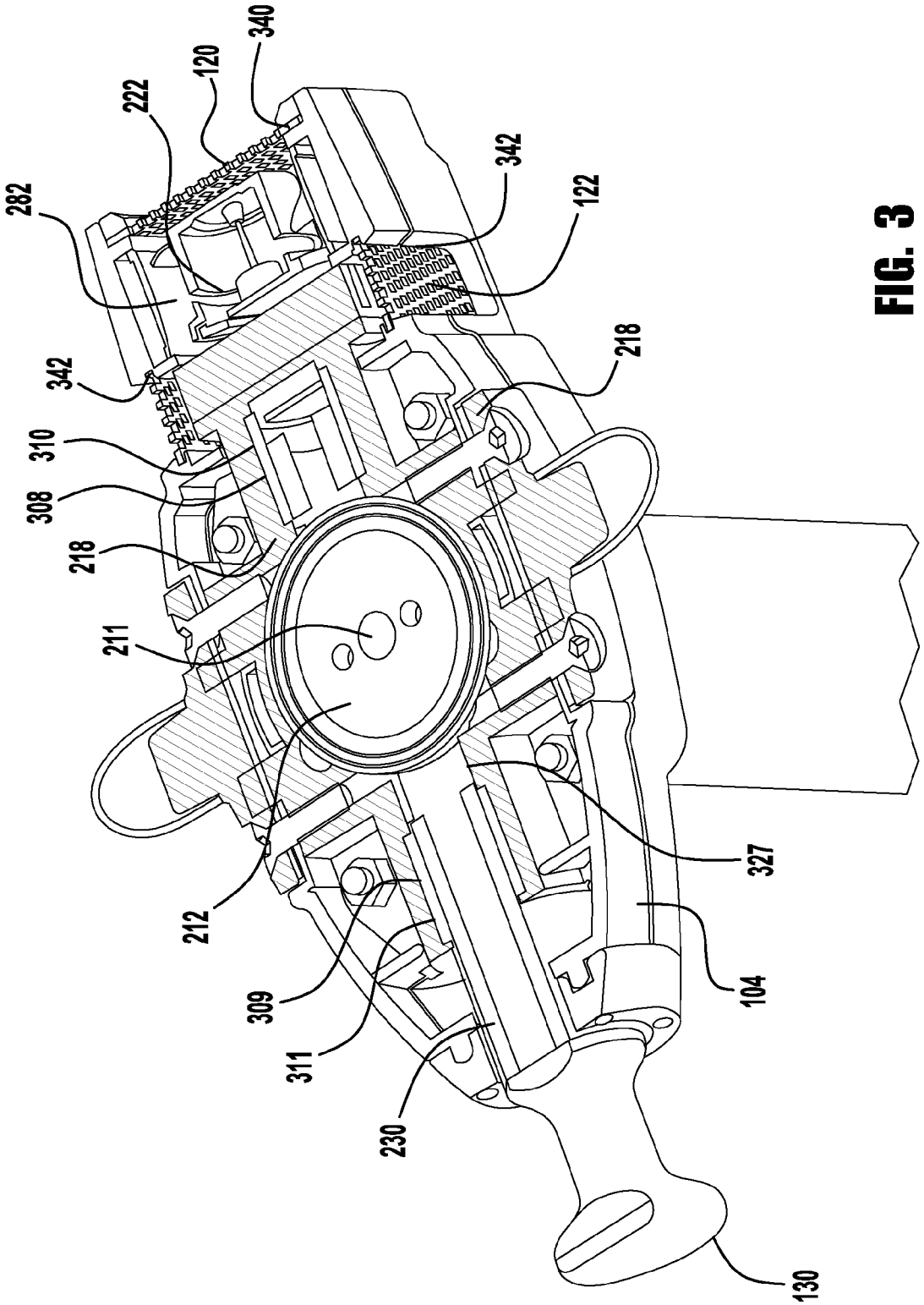
340
120
222
282
342
122
342
218
310
308
218
211
212
309
311
230
327
104
130

FIG. 3

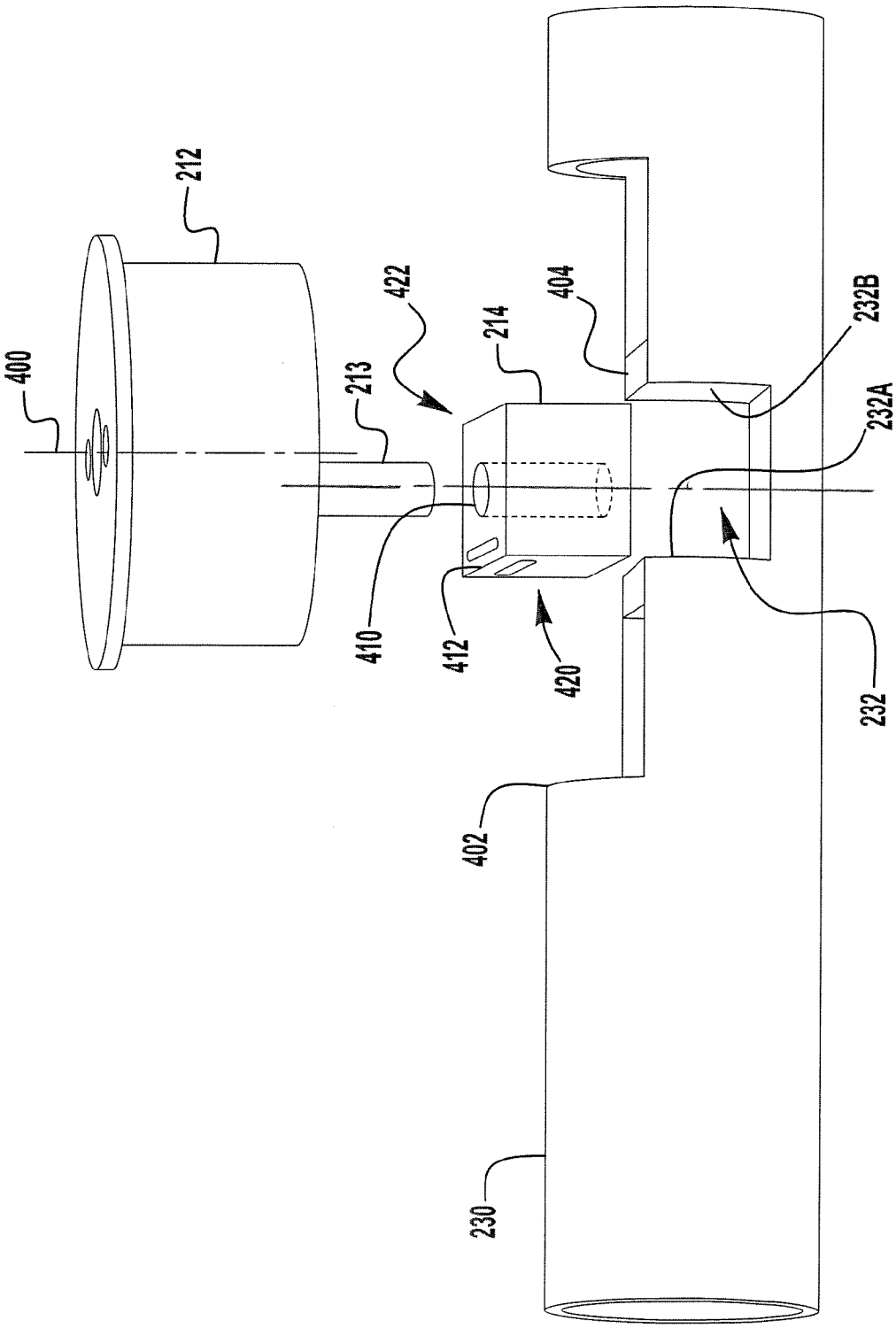

FIG. 4

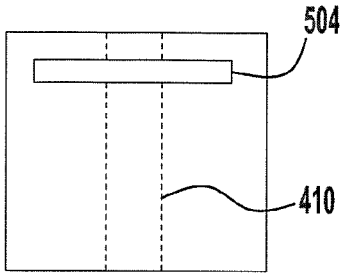

FIG. 5A

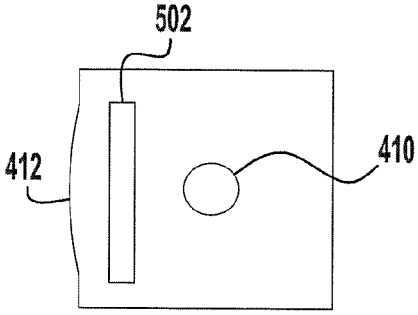

FIG. 5B

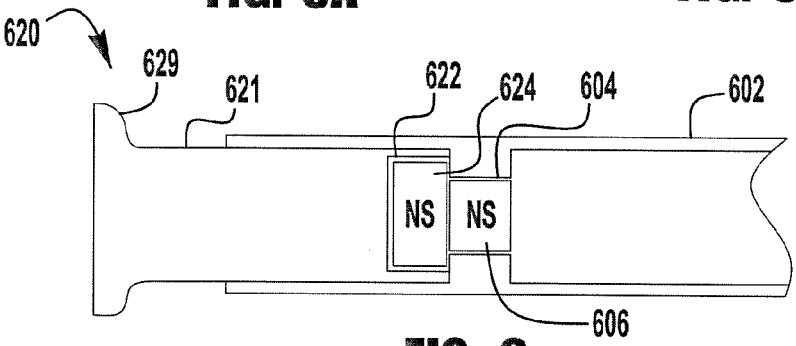

FIG. 6

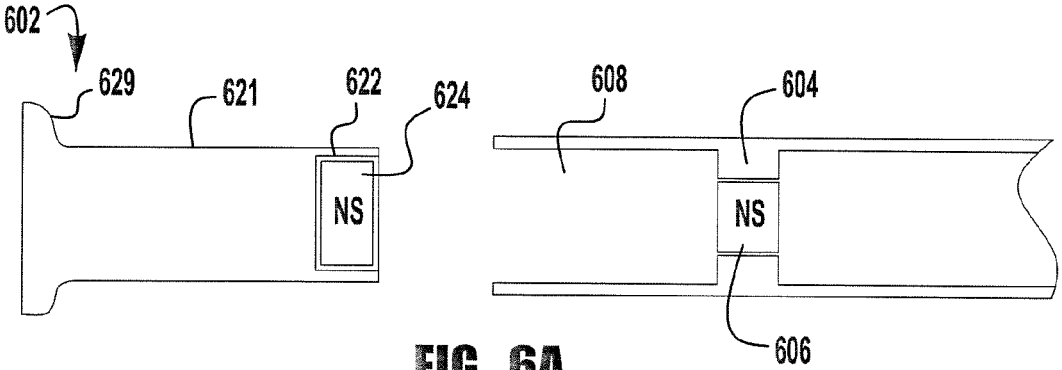

FIG. 6A

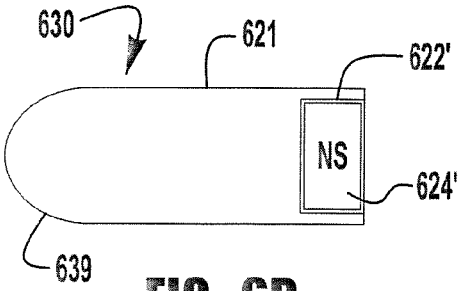

FIG. 6B

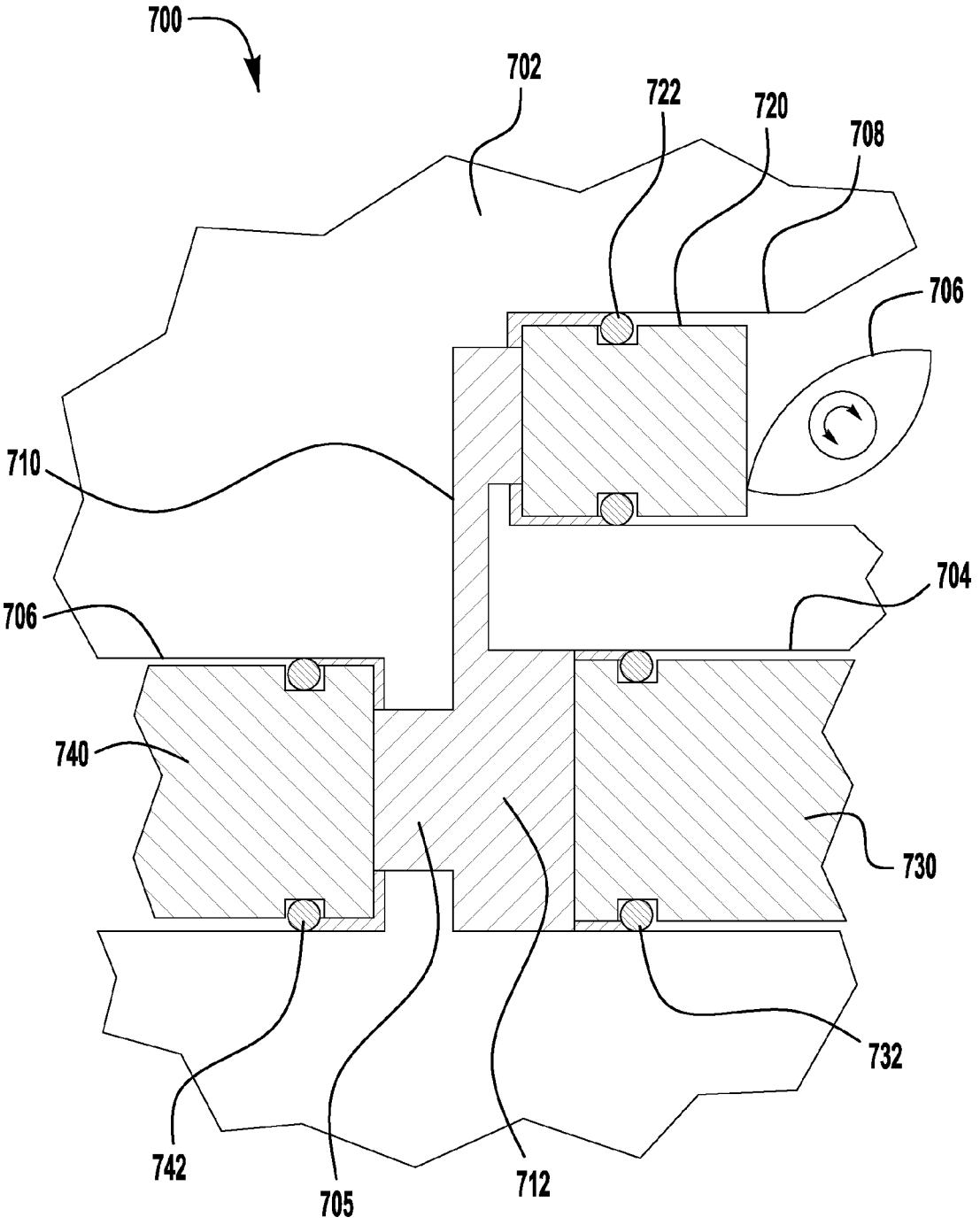

FIG. 7

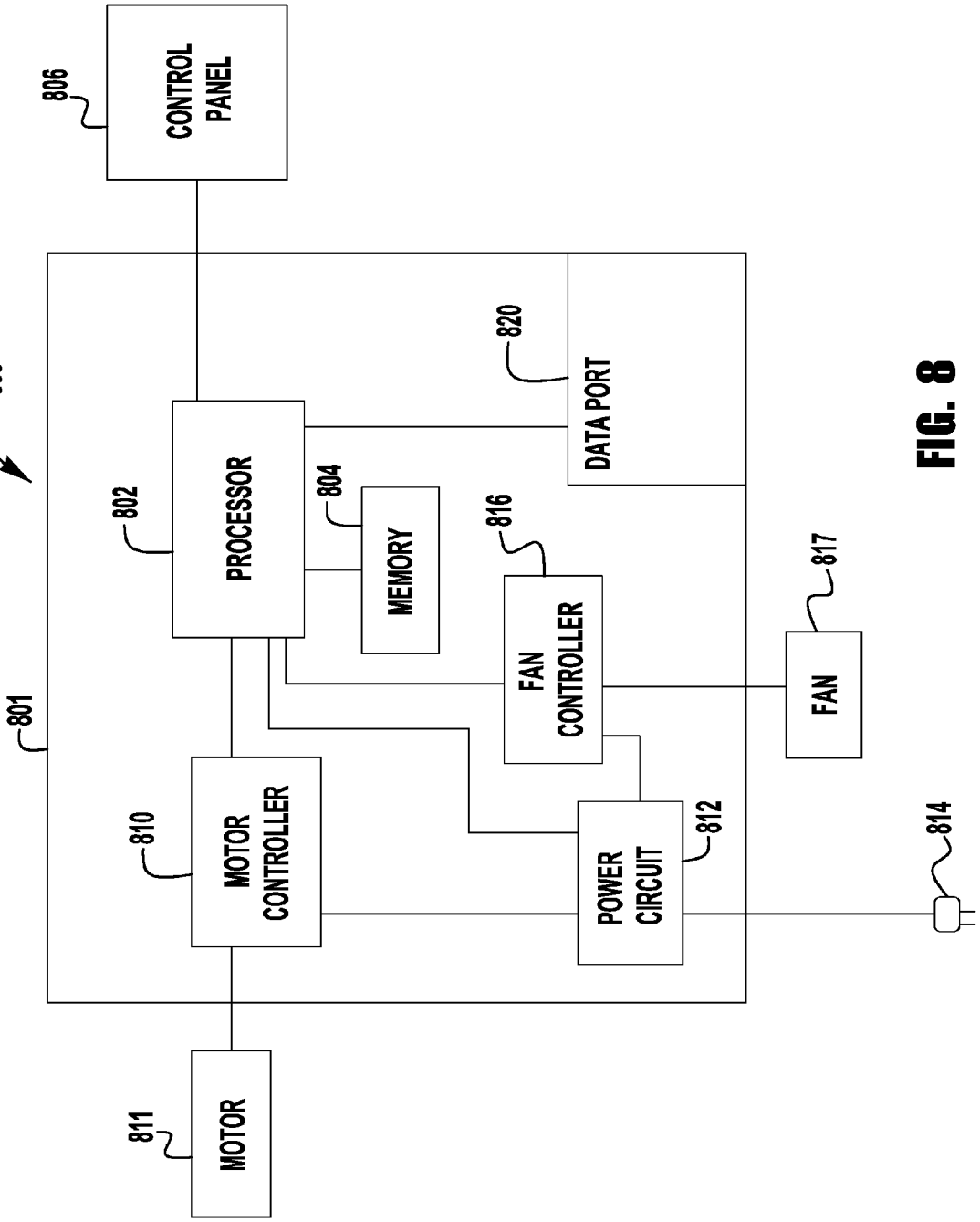
800
801
802
PROCESSOR
804
MEMORY
806
CONTROL PANEL
810
MOTOR CONTROLLER
811
MOTOR
812
POWER CIRCUIT
814
816
FAN CONTROLLER
817
FAN
820
DATA PORT

FIG. 8

MASSAGING DEVICE HAVING A HEAT SINK

RELATED APPLICATIONS

This application claims priority to and the benefits of U.S. Provisional Patent Application Ser. No. 61/841,693 filed on Jul. 1, 2013 and entitled "Massaging Device" which is incorporated herein by reference in its entirety.

BACKGROUND

This invention relates generally to medical devices, and more particularly, to a deep muscle-stimulating device used to increase muscle metabolism, increase the lactic acid cycle and relieve pain.

Vibrating massaging devices are available on the market today; however, those devices suffer from many deficiencies. Many of the prior art massaging devices are bulky, get very hot, are noisy and/or are difficult to use for extended periods of time.

SUMMARY

Exemplary embodiments of massaging devices are disclosed herein. One exemplary embodiment includes a piston having a longitudinal axis and a massaging head connected to the piston. A motor is located on a first side of the longitudinal axis and a handle is located on a second side of the longitudinal axis. A drive mechanism for moving the piston and massage head is also included.

Another exemplary embodiment of a massaging device includes a handle, a piston, a massaging head attached to the piston, a motor, a drive mechanism for converting rotary motion of the motor to linear motion to drive the piston back and forth in a reciprocating motion, a processor, memory, a data connection in circuit communication with the processor and logic for transmitting data between the massaging device and a remote device.

Still another exemplary embodiment includes a massaging device that has a handle, a motor, a drive mechanism for converting rotary motion of the motor to reciprocating motion, a piston movable in a linear reciprocating motion connected to the drive mechanism and a massage head attached to the piston. The exemplary embodiment also includes a heat sink in thermal communication with the motor and drive mechanism, and a housing having two cavities. The first cavity at least partially surrounds the motor and the second cavity at least partially surrounds the heat sink. The cavities are separated from one another and the second cavity includes one or more openings for allowing air to flow over the heat sink to dissipate heat from the massager.

Another exemplary massaging device includes a housing, a handle extending outward from the housing and a piston having a longitudinal axis extending substantially perpendicular to the handle. A massaging head is connected to the piston. In addition, the massaging device includes a motor, a drive mechanism for moving the piston and a control panel. The control panel is located on the housing above the handle.

In yet another exemplary embodiment, a massaging device includes a handle, a piston, a quick-connection mechanism and one or more massaging heads releasably connectable to the piston by the quick-connection mechanism. The massaging device further includes a motor and a drive mechanism for moving the piston.

Another exemplary massaging device includes a handle, a piston, a massaging head connected to the piston, a motor and a drive mechanism for moving the piston. The drive mechanism includes a crank bearing that has one or more spring bars.

Still yet, another exemplary massaging device includes a handle, a piston a massaging head connected to the piston, a drive mechanism for moving the piston in a back and forth motion and a lost motion mechanism located between the massaging head and the drive mechanism.

BRIEF DESCRIPTION OF THE DRAWINGS

These and other features and advantages of the present invention will become better understood with regard to the following description and accompanying drawings in which:

FIG. **1** illustrates a perspective view of an exemplary embodiment of a massaging device;

FIG. **2** illustrates a first cross-section of the exemplary massaging device of FIG. **1**;

FIG. **3** illustrates a second cross-section of the exemplary massaging device of FIG. **1**;

FIG. **4** illustrates an exploded perspective view of an exemplary drive mechanism of the massaging device;

FIGS. **5**A and **5**B show enlarged side views of a crank bearing having spring bars for use in the exemplary drive mechanism of FIG. **4**;

FIGS. **6**, **6**A and **6**B illustrate an exemplary quick-disconnect mechanism for connecting one or more massaging heads to a massaging device;

FIG. **7** illustrates a schematic view of an exemplary lost motion control mechanism for varying the stroke of the piston driving a massaging head; and

FIG. **8** illustrates an exemplary embodiment of a simplified block circuit diagram for a massaging device.

DETAILED DESCRIPTION

The Detailed Description merely describes exemplary embodiments of the invention and is not intended to limit the scope of the claims in any way. Indeed, the invention is broader than and unlimited by the exemplary embodiments, and unless specifically indicated otherwise, the terms used in the claims have their full ordinary meaning.

"Circuit communication" as used herein indicates a communicative relationship between devices. Direct electrical, electromagnetic and optical connections and indirect electrical, electromagnetic and optical connections are examples of circuit communication. Two devices are in circuit communication if a signal from one is received by the other, regardless of whether the signal is modified by some other device. For example, two devices separated by one or more of the following—amplifiers, filters, transformers, optoisolators, digital or analog buffers, analog integrators, other electronic circuitry, fiber optic transceivers or satellites—are in circuit communication if a signal from one is communicated to the other, even though the signal is modified by the intermediate device(s). As another example, an electromagnetic sensor is in circuit communication with a signal if it receives electromagnetic radiation from the signal. As a final example, two devices not directly connected to each other, but both capable of interfacing with a third device, such as, for example, a processor, are in circuit communication.

Also, as used herein, voltages and values representing digitized voltages are considered to be equivalent for the purposes of this application, and thus the term "voltage" as used herein refers to either a signal, or a value in a processor

representing a signal, or a value in a processor determined from a value representing a signal.

"Signal," as used herein includes, but is not limited to one or more electrical signals, analog or digital signals, one or more computer instructions, a bit or bit stream, or the like.

"Logic," synonymous with "circuit" as used herein includes, but is not limited to hardware, firmware, software and/or combinations of each to perform a function(s) or an action(s). For example, based on a desired application or needs, logic may include a software controlled processor, microprocessor or microcontroller, discrete logic, such as an application specific integrated circuit (ASIC) or other programmed logic device. Logic may also be fully embodied as software. The circuits identified and described herein may have many different configurations to perform the desired functions.

Any values identified in the detailed description are exemplary, and they are determined as needed for a particular massaging device. Accordingly, the inventive concepts disclosed and claimed herein are not limited to particular values or ranges of values used to describe the embodiments disclosed herein.

FIG. **1** is a perspective view of an exemplary embodiment of a hand-held massaging device **100**. The exemplary massaging device **100** includes a main housing **102** that houses a motor and a drive unit and an upper housing **104** that includes a heat sink and a fan. In addition, massaging device **100** includes a first handle **106**, and a second optional handle **108**. Handle **106** has a longitudinal axis that extends away from the housing **102**. The massaging device **100** also includes a massaging head **130**. As discussed in more detail below, in some embodiments massaging head **130** includes a quick-release connection.

Massaging device **100** includes a control panel **124**. In one embodiment, control panel **124** comprises a first momentary pushbutton **126** and a second momentary pushbutton **128**. First and second pushbuttons **126**, **128** may serve multiple purposes. In one embodiment, pushing the first pushbutton **126** once moves the massaging device **100** to a first preset speed. Pushing the first pushbutton **126** a second time moves the massaging device **100** to a second preset speed. Accordingly, multiple preset speeds may be selected by pushing a single pushbutton. In addition, pushing pushbutton **126** and holding it down may increase the speed of the massaging head until the user releases the pushbutton **126**.

In addition, if the massaging device **100** is turned off, pushing second pushbutton **128** once and holding it in for a period of time turns on the massaging device **100**. Pushing the second pushbutton **128** in and holding it in for a period of time, such as, for example one second, causes massaging device **100** to turn off. While massaging device **100** is turned on, pushing and releasing second pushbutton **128** decreases the speed of the massaging device **100** to the next lowest preset speed. Pushing and releasing pushbutton **128** again further reduces the speed of the massaging device **100**. In some embodiments, the operating speed of the massaging device is generally between about 600 and 3600 strokes per minute.

The control panel **124** is located above handle **106** on upper housing **104**. Control panel **124** is located off of the handle **106**, which prevents accidental contact between a user's hand and the control panel **124** and allows a user to move her hand to any position on the handle **106** during operation. Preferably, control panel **124** is located so that it is reachable by a user's thumb without the user having to remove her hand from the handle **106**. In addition, massaging device **100** includes a power cord **132** for providing power to the massaging device **100**.

Although the exemplary control panel **124** illustrates two pushbuttons **126**, **128**, other controls may be used, such as dials and switches. In addition, visual or audible signals may be generated and displayed on control panel **124**. To that extent, control panel **124** may include a visual display (not shown), an audible device (not shown) or the like, such as, for example a speaker, or the like. If a visual or audible device is used, the visual or audible device may be located proximate the pushbuttons or other controls, or may be located apart from such controls.

Upper housing **104** includes an air intake aperture covered by intake grate **120** and one or more air outlet apertures covered by outtake grate(s) **122**. As described in more detail below, the heat-generating internal components of massaging device **100** are cooled by air passing through upper housing portion **104**.

FIGS. **2** and **3** are cross-sections of massaging device **100**. Located within handle **106** is control circuitry **260**. Control circuitry **260** is in circuit communication with power cord **132**, control panel **124**, fan **222** and motor **210**.

Motor **210** is located in housing **102** opposite handle **106**. Motor **210** is a variable speed DC motor; however, motor **210** may be a constant speed motor, an AC motor or the like. In one embodiment, motor **210** has an operating speed of between about 600 and 3600 revolutions per minute (RPMs).

Motor **210** includes a shaft **211** that extends into a flywheel **212**. Flywheel **212** includes a cylindrical projecting member or crank pin **213** positioned offset from the centerline **400** (FIG. **4**) of the flywheel **212**. Crank pin **213** is inserted in an aperture **410** (FIG. **4**) of a crank bearing **214**. Crank bearing **214** is inserted into a pocket **232** of a piston **230**. The piston also has an elongated cutout **402** to receive part of the flywheel **212** for compactness while permitting piston reciprocation. Crank bearing **214** is cuboid in the exemplary embodiment, however, in some exemplary embodiments, crank bearing **214** may cylindrical.

FIG. **4** is an exploded perspective view of piston **230**, flywheel **212** and crank bearing **214**. Piston **230** may be made of any suitable material, and in some embodiments, piston **230** is made of aluminum. As illustrated in the drawings, in some embodiments, motor **210** is located on one side of the longitudinal axis of piston **230** and handle **106** is located on a second side of the longitudinal axis. Piston **230** includes a pocket **232** (or transverse slot) having a first wall **232**A and a second wall **232**B. In some embodiments, piston **230** is hollow on either side of pocket **232** to reduce weight.

Flywheel **212** includes a cylindrical projecting member **213**. Crank pin **213** is off set from the centerline **400** of flywheel **212**. Accordingly, as flywheel **212** rotates, crank pin **213** rotates in a circular path around the centerline **400** of the flywheel **212**. Rotation of crank pin **213** causes crank bearing **214** to travel in a circular motion within piston pocket **232** causing reciprocal motion of piston **230**.

Piston **230** is restrained by two spaced apart bearings **310**, **311** (FIG. **3**). Bearing **310** is located on a first side of flywheel **212** and bearing **311** is located on a second side of flywheel **212**. Accordingly, piston **230** may only move in a back-and-forth motion along its longitudinal axis. The arrangement of the bearings **310**, **311** on both ends of the piston **230** provides for a very sturdy and robust drive mechanism. Because piston **230** is constrained to a linear back-and-forth motion, as crank bearing **214** rotates in a circular motion, it acts against side walls **232**A and **232**B of

pocket **232**. This mechanism for converting rotary to linear motion is known as a "Scotch yoke."

In order to correctly assemble the components of a Scotch yoke drive, the pocket **232** (or walls of transverse slot) must be milled larger than the outside dimensions of the crank bearing **214**. The gap between the inside of pocket **232** and the outside of crank bearing **214** is typically 0.1 mm inches. Motor **210** rotates at between about 600 and 3600 RPMs and each time the crank bearing **214** switches from moving, for example, toward side wall **232**A of pocket **232** to moving toward the other side wall **232**B, the bearing block **214** travels the small gap and smacks or strikes the side wall, e.g., side **232**B, which causes a significant amount of noise and wear.

In one exemplary embodiment, crank bearing **214** is made with one spring bar **412**. FIG. **5**A is an enlarged elevation view of side **420** of crank bearing **214** and FIG. **5**B is an enlarged plan view showing top **422** of crank bearing **214**. The spring bars **412** are created by milling the outside of the spring block **214** proud by 0.4 mm in the area of the desired spring bar.

As illustrated in FIG. **5**A, the surface of spring bar **412** bows outward. The size of the bow is set to increase the width of the crank bearing **214** to be slightly larger (0.4 mm) than the width of the pocket **232**. In some embodiments, slots **502** and **504** are milled into the surfaces of side **420** and top **422** below the spring bar **412** to allow spring bar **412** to deflect inwards. In some embodiments, slots **502** and **504** intersect thereby leaving spring bar **412** supported only on each end.

Thus, when crank bearing **214** is inserted into pocket **232**, the spring bar **412** contacts the corresponding surface of the pocket **232** and deflects inward which causes crank bearing **214** to fit snuggly in pocket **232**. Accordingly, as crank bearing **214** changes directions from, for example, moving toward side wall **232**A to moving toward side wall **232**B, the spring bar **412** takes up the slack in the gap and prevent noise and wear that would otherwise be generated by the crank bearing **214** striking the side walls **232**A, **232**B of the pocket **232**.

Crank bearing **214** may be made of any suitable material; in some embodiments, crank bearing **214** is made of plastic. Although the exemplary embodiment is shown and described as having one spring bar, exemplary embodiments may have any number of spring bars.

Massaging device **100** includes a drive housing **218**. Drive housing **218** is made of a heat conducting material, such as, for example, aluminum and has a longitudinal bore **327** passing therethrough to receive piston **230**. As shown in FIG. **3**, drive housing **218** includes a first internal cylindrical groove **308** for holding bearing **310** and a second internal cylindrical groove **309** for holding bearing **311**. Spaced bearings **310** and **311** mount and guide the piston **230** relative to the drive housing **218**. Drive housing **318** surrounds piston **230** and flywheel **212**. In some embodiments, drive housing **318** is made up of multiple components, such as an upper drive housing and a lower drive housing.

In addition, motor **210** includes a motor housing **209** that bolts onto drive housing **218**. Motor housing **209** is also made of a heat-conducting material, such as, for example, aluminum. Secured to drive housing **218** is heat sink **220**. Heat sink **220** includes a plurality of fins **221**. Heat sink **220** is made of a heat conducting-material, such as, for example, aluminum.

Main housing **102** contains a first cavity **281**. Upper housing **104** contains a second cavity **282**. First cavity **281** and second cavity **282** are separated by a barrier **280**. Motor housing **209** and drive housing **218** are located in the first cavity **281**. Heat sink **220** is located in second cavity **282**. The exemplary embodiment describes a main housing **102** and upper housing **104**. These may be portions made up of a single structure or multiple structures secured to each other.

Second cavity **282** includes an air inlet aperture **340** which is covered by grate **120** and one or more air outlet apertures **342** covered by one or more grates **122**. A fan **222** is located in second cavity **282**. When the fan **222** is activated, air enters second cavity **282** through air inlet aperture **340** and passes over cooling fins **221** of heat sink **220**, and the air then passes out of second cavity **282** through the one or more air outlets **342**. The fan may be activated by a switch (not shown) on control panel **124**, activated automatically when the massaging device **100** is turned on, or may be activated by a thermostat (not shown). Thus, the cooling system for massaging device **100** is located in second cavity **282** and is isolated from the other components in the massaging device **100**.

In typical massaging devices, cooling air is blown over the motor. Because the massaging devices operate for long periods of time in an atmosphere that is subject to a significant amount of dust and lint because the massaging device is often used on a person wearing clothes, a towel or a robe. Over time, the dust and lint may build up on the motor and cause the prior art massaging devices to overheat. Locating the cooling system in a cavity **282** that is isolated from the rest of the internal components minimizes this type of failure. The air outlet grates **122** may be sized larger to allow any lint and dust to freely pass out of the cavity **282**. In addition, the surface of the heat sink **220** is smooth and thus, there will be few pockets for dust and lint to get trapped.

FIGS. **6** and **6**A illustrate an exemplary embodiment of a quick-connect system **600** for connecting a massaging head **620** to a piston **602**. When providing a deep tissue massage using a massaging device, such as, for example, massaging device **100**, it may be desirable to switch massaging heads to work on different muscles or different portions of muscles during the massage. The exemplary quick-connect system **600** allows a user to quickly switch massaging heads **620**. Moreover, the exemplary quick-connect system **600** may be used without turning off the massaging device **100**.

Quick-connect system **600** includes a piston **602** that has a hollow-end bore **608** for receiving the shaft **621** of a massaging head **620**. Located within the bore **608** of piston **602** is a cylindrical seat **604**. Cylindrical seat **604** retains a magnet **606**. Magnet **606** is illustrated with its north pole located flush with the seat and facing toward the opening in bore **608**. Massaging head **620** includes a shaft **621** having a cylindrical pocket **622** at the distal end. Located within the cylindrical pocket **622** is a magnet **624**. Magnet **624** is positioned so that its south pole is located at the distal end of shaft **621**. Accordingly, when the shaft **621** of massaging head **620** is slid into opening in bore **608**, the magnets **606** and **624** are attracted to one another and magnetically hold massaging head **620** firmly in place.

To remove massaging head **620**, a user need only apply a sufficient amount of force to separate the two magnets **606**, **624**. The strength of the magnets **606**, **624** are sized to prevent the massaging head **620** from separating from the piston **602** during normal use, and yet allow a user to quickly remove and replace the massaging head **620**. In some embodiments the end **626** of the massaging head **620** is

rounded, pointed or tapered (not shown) to allow it to easily slip into the opening **608** even while the piston **608** is moving.

FIG. **6**B illustrates another quick-connect massaging head **630**. Quick-connect massaging head **630** is substantially the same as massaging head **620** except that the head portion **639** has a different shape than head portion **629** of massaging head **620**.

In some instances, it may be desirable to adjust the throw or the stroke length of the massaging head to work on larger or smaller muscle groups, or deeper or shallower points of stress or soreness in the muscles. FIG. **7** illustrates an exemplary embodiment of a lost motion system **700**. Although lost motion system **700** is a hydraulic lost motion system, other mechanical lost motion devices may be used in accordance with embodiments of the present invention.

Lost motion system **700** is contained in housing **702**. Housing **702** may be similar to drive housing **218** described above except it may need to be larger to accommodate lost motion system **700**. Housing **702** includes a floating piston **720** located in first cylindrical bore **708**. Floating piston **720** includes a sealing member **722** for forming a seal between floating piston **720** and first cylindrical bore **708**. A cam **706** secured to housing **702** may be rotated to adjust the amount of travel that floating piston **720** may move. A passage **710** fluidically connects first cylindrical bore **708** to second cylindrical bore **704**.

A drive piston **730** is located in second cylindrical bore **704**. Drive piston **730** includes a sealing member **732** to seal between the drive piston **730** and second cylindrical bore **704**. Drive piston **730** may be driven in substantially the same way as described above with respect to piston **230**. A passage **705** fluidically connects second cylindrical bore **704** and passage **710** to third cylindrical bore **706**. Located within third cylindrical bore **706** is an output piston **740**.

Output piston **740** includes a sealing member **742**, such as, for example, an o-ring to form a seal between drive piston **730** and third cylindrical bore **706**. Hydraulic fluid **712** is located in passages **705**, **710** and portions of the first, second, and third cylindrical cavities **708**, **704** and **706** as illustrated. A massaging head (not shown) is connected to output piston **740**.

During operation, if cam **706** is set so that floating piston **720** is retained at the proximate end of first cylindrical bore **708** (as illustrated), movement of the drive piston **730** moves output piston **740** its maximum stroke length. If cam **706** is set so that floating piston **720** moves to adjacent the distal end of first cylindrical bore **708**, movement of the drive piston **730** moves output piston **740** its minimum stroke length. The cam may also be selectively rotated to intermediate positions to choose different magnitudes of floating piston movement resulting in different selected magnitudes of output piston movement.

In some embodiments, floating piston **720** is physically connected to the cam or other adjustment mechanism so that it is positioned in a predetermined position and remains stationary during operation of the drive piston **730**. Thus, floating piston **720** does not float during operation of the massaging device.

In some embodiments, the lost motion system may be contained in the massaging head itself, or in an adaptor that connects between the piston and the massaging head. Thus, rather than having a cam in the housing of the massaging device, different applicator heads or adaptors having a set lost motion, or variable lost motion systems integral therein may be used. In some embodiments, such adaptors and massaging heads may be adapted with a quick-connect systems similar to the ones described with respect to FIGS. **6** and **6**A.

FIG. **8** illustrates a simplified exemplary electrical schematic diagram **800** of an embodiment of a massaging device. The components disclosed as being on a particular circuit board may be on multiple circuit boards or individually mounted and hardwired to one another. Circuit board **801** includes memory **804**, motor control circuitry **810** and fan control circuitry **816**, which are in circuit communication with processor **802**. Fan control circuitry **816** is in circuit communication with fan **817**.

Power circuitry **812** may be included on circuit board **801** or may be located on its own external to the massager. Power circuitry **812** includes the necessary power conditioning circuitry to provide power to both the electronics and the motors. In circuit communication with power circuitry **812** is plug **814**. Optionally two or more power circuits may be utilized. All of the connections between power circuitry **812** and the other components may not be shown in FIG. **8**; however, those skilled in the art have the required knowledge to provide power to the devices that require power. Motor control circuitry **810** is in circuit communication with drive motor **811**. Drive motor **811** is used to drive the piston and massaging head as described above.

Memory **804** is a processor readable media and includes the necessary logic to operate the massaging device. Examples of different processor readable media include Flash Memory, Read-Only Memory (ROM), Random-Access Memory (RAM), programmable read-only memory (PROM), electrically programmable read-only memory (EPROM), electrically erasable programmable read-only memory (EEPROM), magnetic disk, and optically readable mediums, and others. Still further, the processes and logic described herein can be merged into one large process flow or divided into many sub-process flows. The order in which the process flows herein have been described is not critical and can be rearranged while still accomplishing the same results. Indeed, the process flows described herein may be rearranged, consolidated and/or reorganized in their implementation as warranted or desired.

In addition, processor **802** is in circuit communication with control panel **806**. Control panel **806** includes any desired pushbuttons, dials, displays or the like. Control panel **806** provides the operator interface to operate and control the massaging device.

Processor **802** is also in circuit communication with data connection **820**. Representative data connections **820** include an Ethernet wire, Bluetooth, WiFi, optical transmitter/reader, an IR reader and the like. Combinations of two or more different data connections **820** may be used. Data connection **820** may be used to transmit data to an outside device, such as, for example, a computer or hand-held portable device. Various uses for transmitting such data are described below.

In some embodiments, processor **802** includes logic to collect and store data related to use of the massaging device. Exemplary types of data may include usage rates, operating times or the like. In some embodiments, different massaging heads include an RFID chip and when inserted into the massaging device, an RFID reader (not shown) identifies and stores the type of massaging head utilized. In some embodiments, a customer number may be associated with the data. This data may be used to determine lease rates of the massaging device, for calculating cost/benefit analysis, or for setting up customized massages.

In some embodiments, data may be uploaded from a computer or hand-held portable device to the massaging device. Such data may include customized massaging programs tailored for individual needs. In some embodiments, the customized massaging program may be reflective of prior massages given to a customer that were particularly well-received by the customer.

In some embodiments, the customized massaging program may indicate to the user on a display on the control panel **806** massage times, locations, type of massage head to use or the like to ensure covering the desired locations with the customized massage.

While various inventive aspects, concepts and features of the inventions may be described and illustrated herein as embodied in combination in the exemplary embodiments, these various aspects, concepts and features may be used in many alternative embodiments, either individually or in various combinations and sub-combinations thereof. Unless expressly excluded herein all such combinations and sub-combinations are intended to be within the scope of the present inventions. Still further, while various alternative embodiments as to the various aspects, concepts and features of the inventions—such as alternative materials, structures, configurations, methods, circuits, devices and components, software, hardware, control logic, alternatives as to form, fit and function, and so on—may be described herein, such descriptions are not intended to be a complete or exhaustive list of available alternative embodiments, whether presently known or later developed. Those skilled in the art may readily adopt one or more of the inventive aspects, concepts or features into additional embodiments and uses within the scope of the present inventions even if such embodiments are not expressly disclosed herein. Additionally, even though some features, concepts or aspects of the inventions may be described herein as being a preferred arrangement or method, such description is not intended to suggest that such feature is required or necessary unless expressly so stated. Still further, exemplary or representative values and ranges may be included to assist in understanding the present disclosure; however, such values and ranges are not to be construed in a limiting sense and are intended to be critical values or ranges only if so expressly stated. Moreover, while various aspects, features and concepts may be expressly identified herein as being inventive or forming part of an invention, such identification is not intended to be exclusive, but rather there may be inventive aspects, concepts and features that are fully described herein without being expressly identified as such or as part of a specific invention. Descriptions of exemplary methods or processes are not limited to inclusion of all steps as being required in all cases, nor is the order that the steps are presented to be construed as required or necessary unless expressly so stated.

We claim:

1. A massaging device comprising:
a piston;
a massaging head connected to the piston;
the piston having a longitudinal axis;
a motor located on a first side of the longitudinal axis;
an elongated handle located on a second side of the longitudinal axis;
a drive mechanism for moving the piston and massage head; and
a thermally conductive drive housing at least partially surrounding the drive mechanism;
a first cavity at least partially enclosing the thermally conductive drive housing;
a heat sink in thermal conductivity with the thermally conductive drive housing; and
a second cavity at least partially enclosing the heat sink, wherein the first cavity is separated from the second cavity by a barrier that prevents air from flowing between the first and second cavities.

2. The massaging device of claim **1** further comprising a control panel located above the elongated handle and wherein the elongated handle is separated from the control panel by a wall.

3. The massaging device of claim **2** wherein the control panel includes at least one of an audible or a visual feedback device.

4. The massaging device of claim **1** further comprising a data connection for transferring stored data indicative of the use of the massaging device, to or from the massaging device.

5. The massaging device of claim **1** wherein the drive mechanism comprises a crank bearing and one or more spring bars, wherein the one or more spring bars contact one or more walls of a pocket that receives the crank bearing.

6. The massaging device of claim **1** wherein at least a portion of the piston is hollow.

7. The massaging device of claim **1** wherein the drive mechanism comprises a fly wheel having an offset cylindrical projection that fits into a crank bearing.

8. The massaging device of claim **1** further comprising two or more cylindrical bearings separate from one another, wherein the bearings retain the piston and at least one bearing is on a first side of a connection between a drive mechanism and the piston and at least one bearing is on a second side of the connection between the drive mechanism and the piston.

9. The massaging device of claim **1** further comprising a quick connect mechanism for connecting the massaging head to the piston.

10. The massaging device of claim **9** wherein the quick connect mechanism comprises at least one magnet and the massaging head is connected to the piston by magnetic force.

11. A massaging device comprising:
a handle;
a piston;
a massaging head attached to the piston;
a motor;
a drive mechanism for converting rotary motion of the motor to linear motion to drive the piston back and forth in a reciprocating motion;
a processor;
memory;
a data connection in circuit communication with the processor;
logic for transmitting stored data indicative of the use of the massaging device between the massaging device and a remote device between the massaging device and a remote device; and
a thermally conductive drive housing at least partially surrounding the drive mechanism;
a first cavity at least partially enclosing the thermally conductive drive housing;
a heat sink in thermal conductivity with the thermally conductive drive housing; and
a second cavity at least partially enclosing the heat sink, wherein the first cavity is separated from the second cavity by a barrier that prevents air from flowing from the first cavity to the second cavity.

12. A massaging device comprising:

a handle;

a motor;

a drive mechanism for converting rotary motion of the motor to reciprocating motion;

a piston movable in a linear reciprocating motion connected to the drive mechanism;

a massage head attached to the piston;

a heat sink in thermal communication with the motor;

a housing having a first cavity and a second cavity;

the first cavity at least partially surrounding the motor;

the second cavity at least partially surrounding the heat sink;

the first cavity being separated from the second cavity by a barrier that isolates the interior of the first cavity from the interior of the second cavity and prevents air from flowing between the first and second cavities; and

one or more openings into the second cavity for allowing air to flow over the portion of the heat sink in the second cavity to dissipate heat from the motor.

13. The massaging device of claim **12** further comprising a control panel located on the housing above the handle and wherein the handle is separated from the control panel by a wall.

14. The massaging device of claim **12** wherein the drive mechanism comprises a crank bearing and one or more spring bars, wherein the one or more spring bars contact one or more walls of a pocket that receives the crank bearing.

15. The massaging device of claim **12** further comprising control circuitry, wherein at least a portion of the control circuitry is located in the handle and wherein the handle is separated from the control circuitry by a wall.

16. The massaging device of claim **12** further comprising two or more cylindrical bearings separate from one another, wherein the bearings retain the piston and at least one bearing is on a first side of a connection between a drive mechanism and the piston and at least one bearing is on a second side of the connection between the drive mechanism and the piston.

17. The massaging device of claim **12** further comprising a quick-connect mechanism for connecting the massaging head to the piston.

18. The massaging device of claim **17** wherein the quick-connect mechanism comprises at least one magnet and the massaging head is connected to the piston by magnetic force.

* * * * *