US010557490B2

(12) **United States Patent**
Wersland et al.

(10) **Patent No.: US 10,557,490 B2**
(45) **Date of Patent: Feb. 11, 2020**

(54) **TREATMENT ELEMENT ATTACHMENT SYSTEM**

(71) Applicant: **TheraGun, LLC**, Beverly Hills, CA (US)

(72) Inventors: **Jason Wersland**, Manhattan Beach, CA (US); **Michael Waldron**, Dunnington (GB); **Geert Ensing**, Shanghai (CN); **Dennis Colonello**, Beverly Hills, CA (US); **Benjamin Nazarian**, Los Angeles, CA (US)

(73) Assignee: **THERAGUN, INC.**, Beverly Hills, CA (US)

(*) Notice: Subject to any disclaimer, the term of this patent is extended or adjusted under 35 U.S.C. 154(b) by 468 days.

(21) Appl. No.: **15/647,050**

(22) Filed: **Jul. 11, 2017**

(65) **Prior Publication Data**

US 2019/0017528 A1 Jan. 17, 2019

(51) **Int. Cl.**

A61H 23/00	(2006.01)
F16B 7/04	(2006.01)
F16B 39/28	(2006.01)
F16B 7/18	(2006.01)
A61H 1/00	(2006.01)

(Continued)

(52) **U.S. Cl.**

CPC ***F16B 7/042*** (2013.01); ***A61H 1/008*** (2013.01); ***A61H 23/00*** (2013.01); ***A61H 23/006*** (2013.01); ***F16B 7/187*** (2013.01); ***F16B 21/086*** (2013.01); ***F16B 21/12*** (2013.01); ***F16B 21/186*** (2013.01); ***F16B 39/28*** (2013.01); *A61H 2201/1207* (2013.01); *A61H 2201/1215* (2013.01); *A61H 2201/169* (2013.01);

(Continued)

(58) **Field of Classification Search**

CPC . A61H 1/008; A61H 2201/1215; F16B 7/042; F16B 7/187; F16B 39/28; F16B 2/16; F16B 21/165; Y10T 403/4637; Y10T 403/4694; Y10T 403/592; Y10T 403/604

USPC 403/243, 263, 322.1, 330, 322, 322.2, 403/335, 336, 337, 328

See application file for complete search history.

(56) **References Cited**

U.S. PATENT DOCUMENTS

2,391,671 A 12/1945 Berg
2,475,861 A 7/1949 Thalmann

(Continued)

OTHER PUBLICATIONS

International Search Report and Written Opinion for PCT/US2018/039599.

(Continued)

Primary Examiner — Daniel J Wiley

(74) *Attorney, Agent, or Firm* — Jeffer Mangels; Butler & Mitchell LLP; Brennan C. Swain, Esq.

(57) **ABSTRACT**

A treatment assembly for securing a treatment member to a shaft that includes the treatment member and a female attachment member. The treatment member defines a longitudinal axis, and has a distal end and a proximal end. The proximal end includes an attachment recess defined therein. The female attachment member has a distal end, a proximal end, and a shaft recess defined in the proximal end. The female attachment member is secured in the attachment recess of the treatment member. The shaft recess is defined by an interior surface that includes a first flat surface. The interior surface includes a first detent defined therein. When the shaft is received in the shaft recess, the first flat surface is operatively engaged with a first opposing flat surface on a male attachment member and a first ball is biased into the first detent.

7 Claims, 9 Drawing Sheets

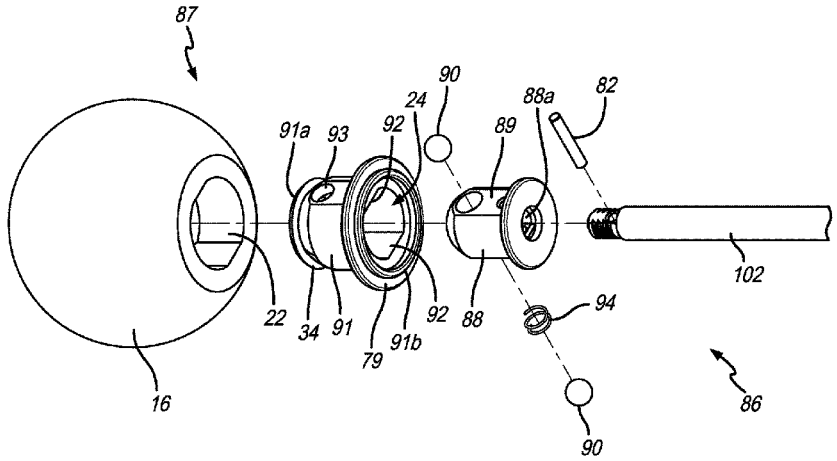

(51) **Int. Cl.**

F16B 21/08	(2006.01)
F16B 21/12	(2006.01)
F16B 21/18	(2006.01)
F16B 1/00	(2006.01)

(52) **U.S. Cl.**
CPC *A61H 2201/1669* (2013.01); *A61H 2201/1685* (2013.01); *F16B 2001/0035* (2013.01)

(56) **References Cited**

U.S. PATENT DOCUMENTS

3,172,675	A	3/1965	Gonzalez
5,103,809	A	4/1992	Deluca
6,006,631	A	12/1999	Miner
6,245,031	B1	6/2001	Pearson
7,740,249	B1	6/2010	Gao
2005/0075591	A1	4/2005	Hafemann
2005/0131461	A1	6/2005	Tucek
2014/0101872	A1	4/2014	Utsch

OTHER PUBLICATIONS

PCT/US18/040795 International Search Report and Written Opinion dated Sep. 24, 2018.

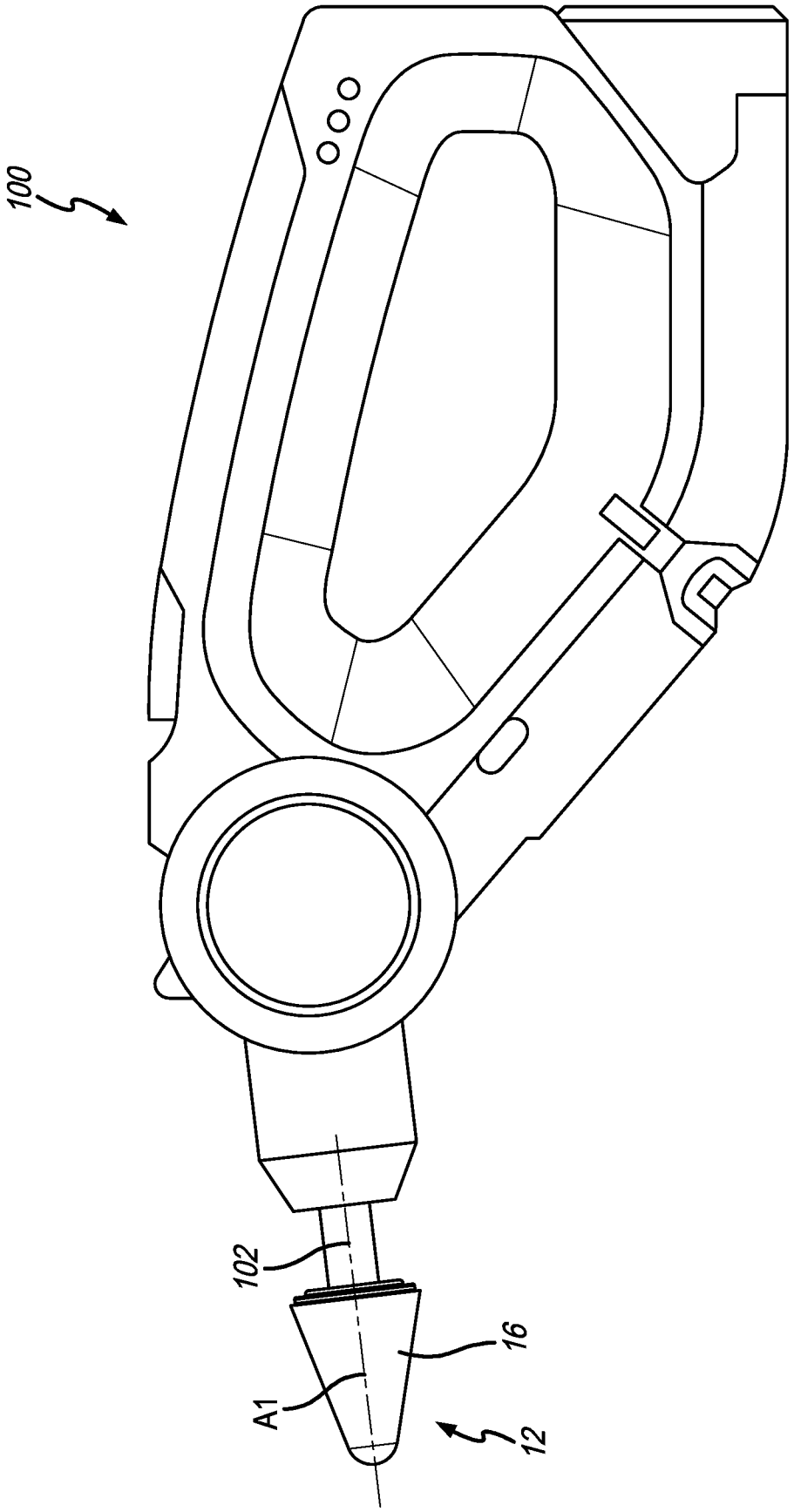

FIG. 1

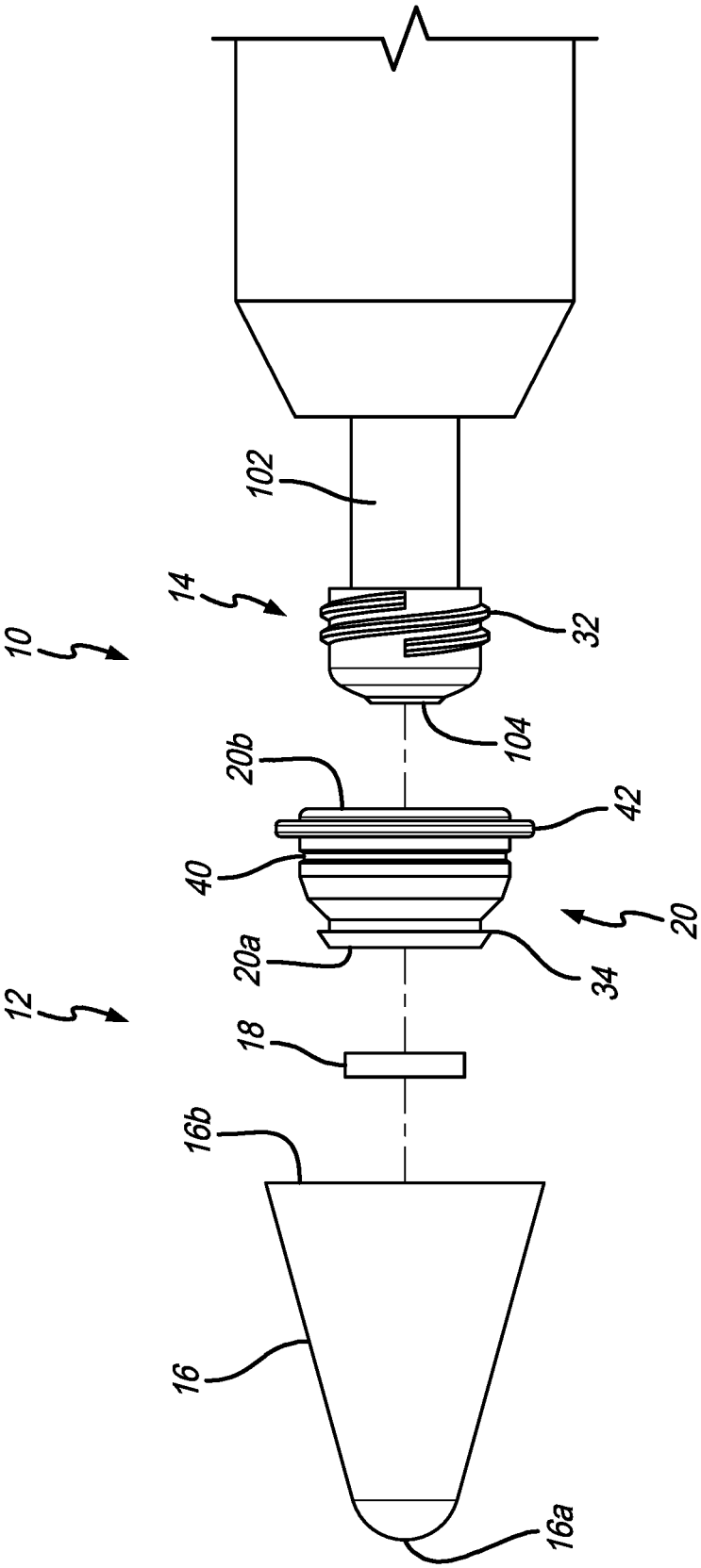

FIG. 2

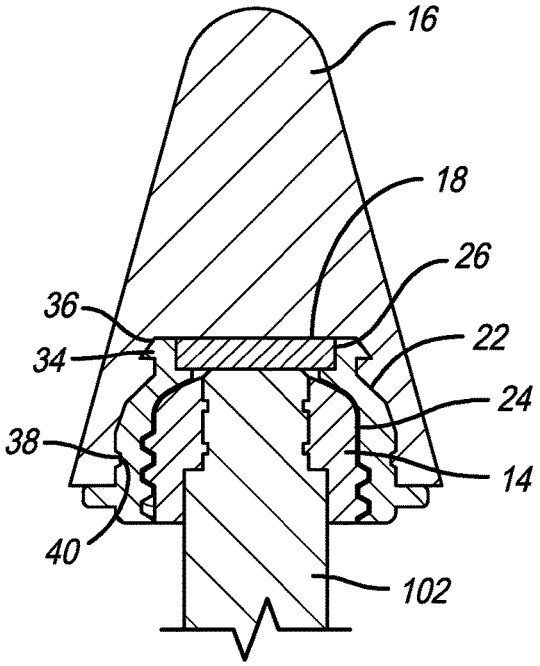
16
18
26
36
22
34
24
38
14
40
102

FIG. 3

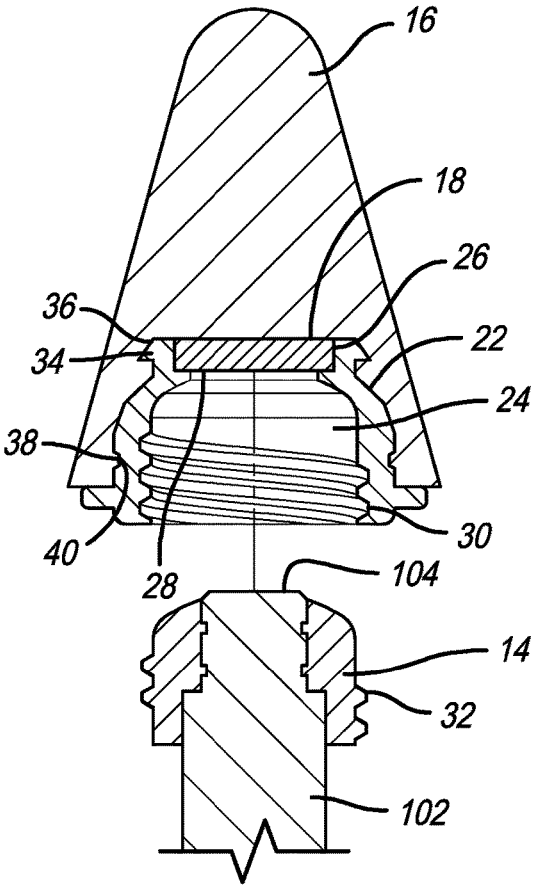
16
18
26
36
22
34
24
38
30
40
28
104
14
32
102

FIG. 4

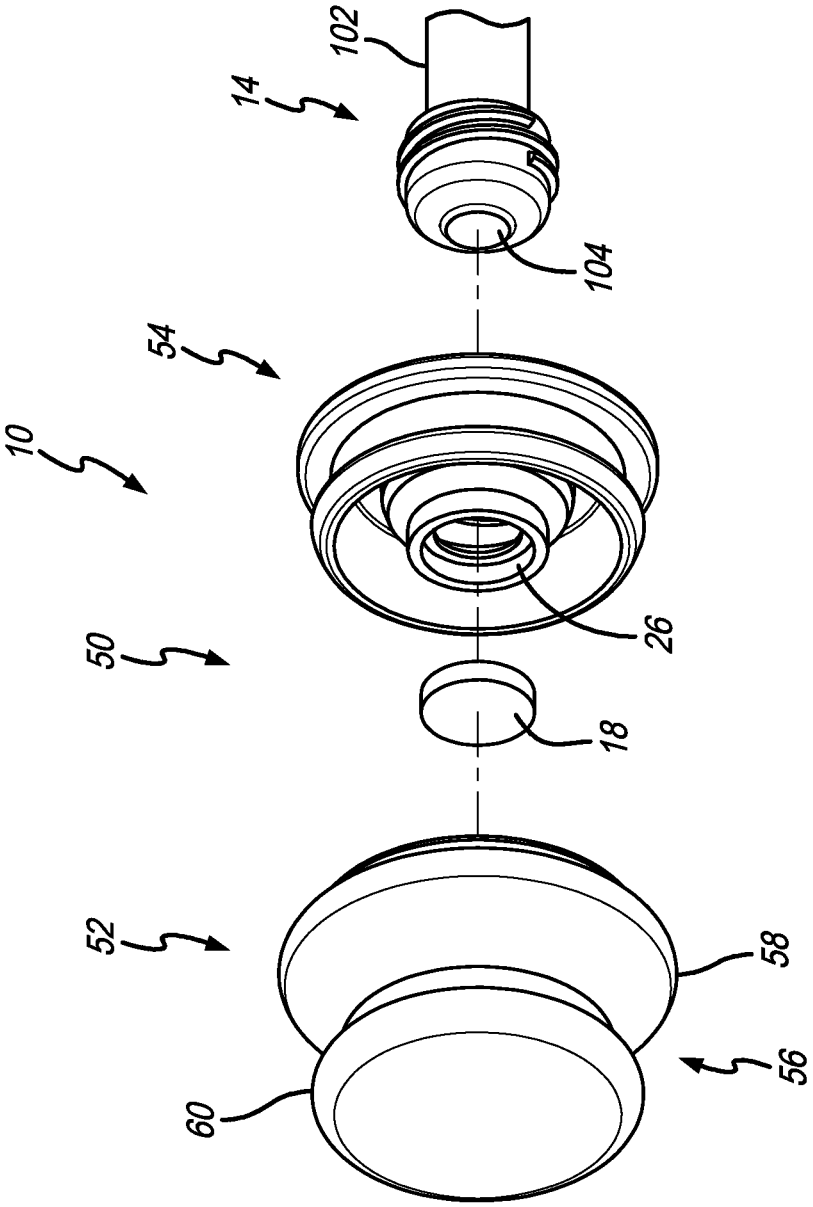

FIG. 5

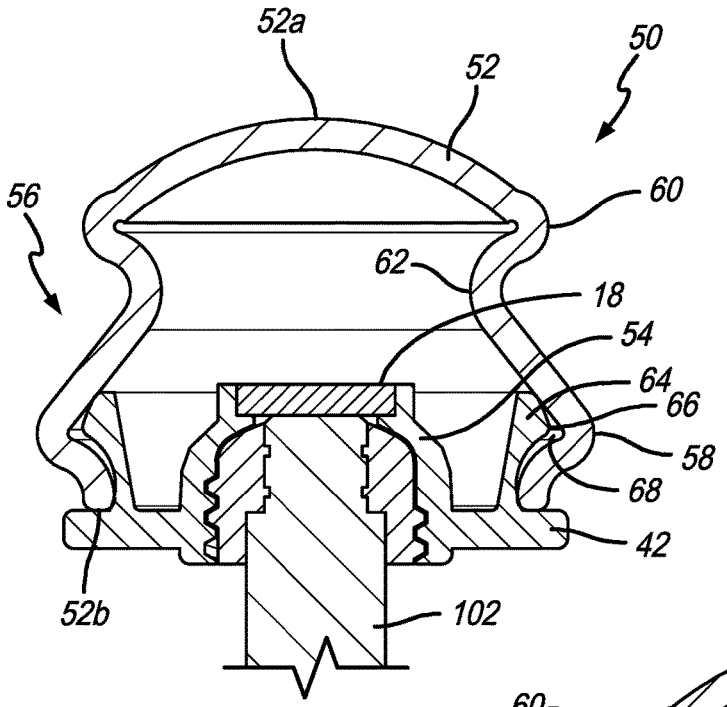
52a
52
50
56
60
62
18
54
64
66
58
68
42
52b
102

FIG. 6

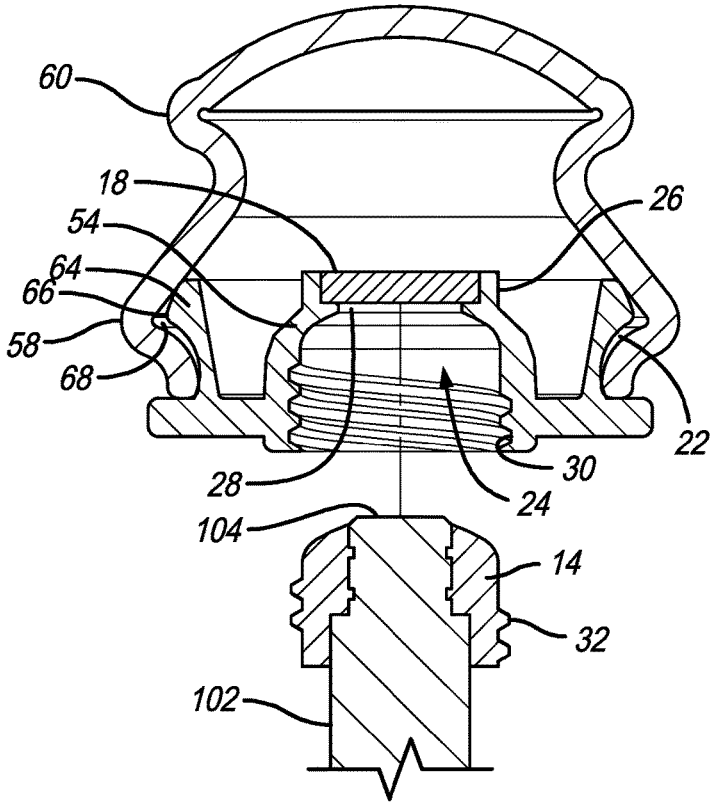
60
18
26
54
64
66
58
68
22
30
28
24
104
14
32
102

FIG. 7

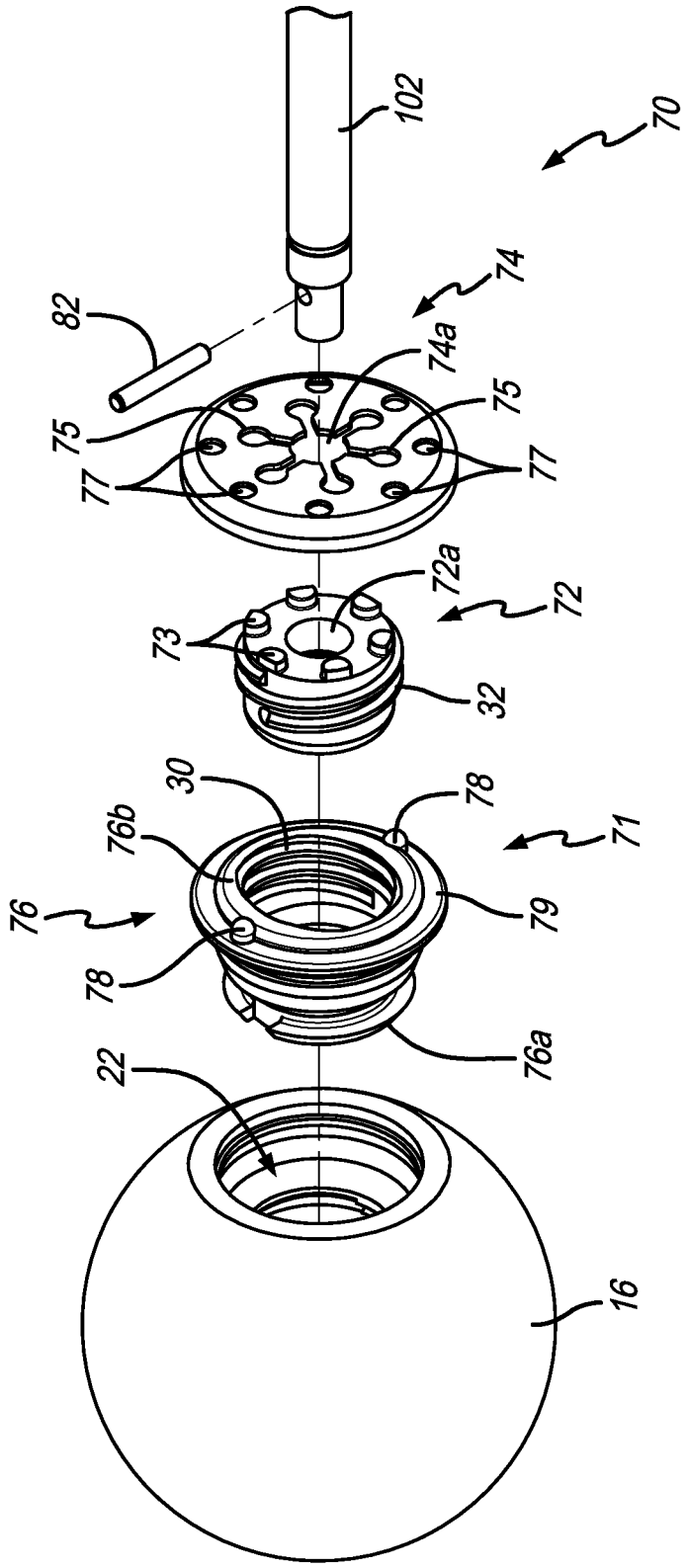
102
70
82
74
74a
75
75
77
77
72a
72
73
32
30
78
76b
71
76
79
78
76a
22
16

FIG. 8

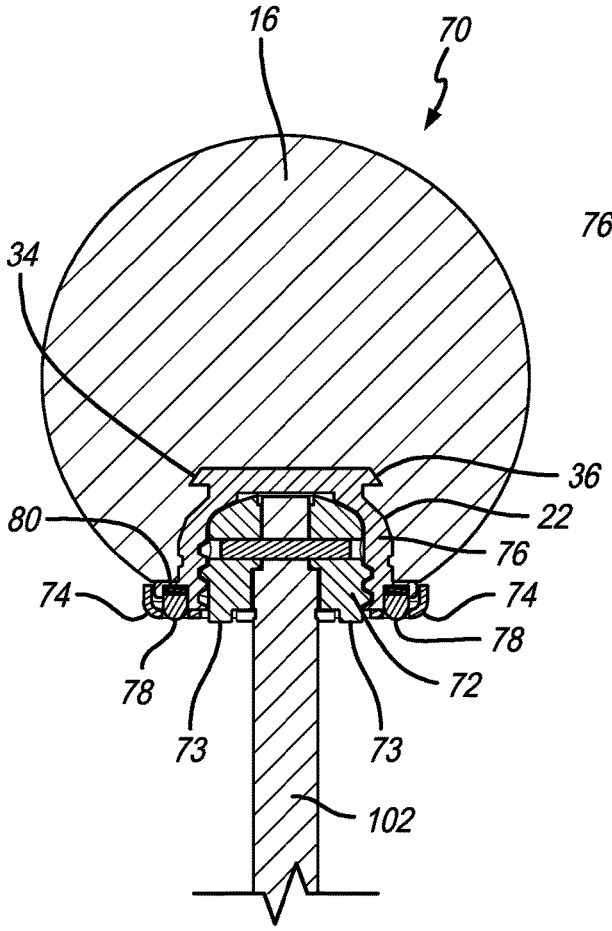
16
70
34
36
80
22
76
74
74
78
78
72
73
73
102

FIG. 9

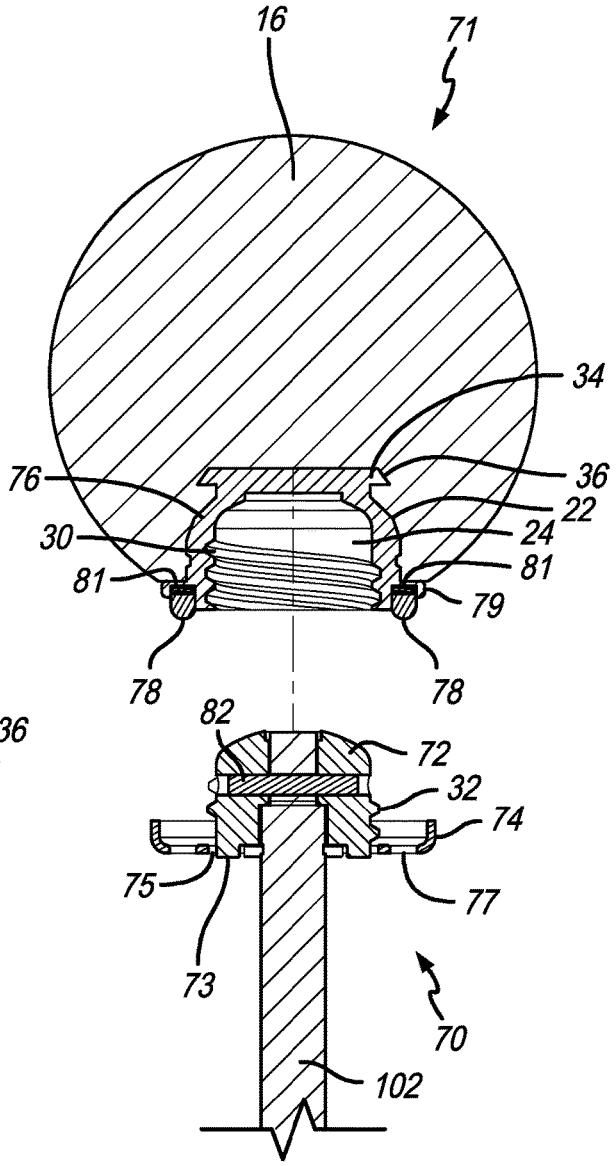
16
71
34
76
36
22
30
24
81
81
79
78
78
82
72
32
74
75
77
73
70
102

FIG. 10

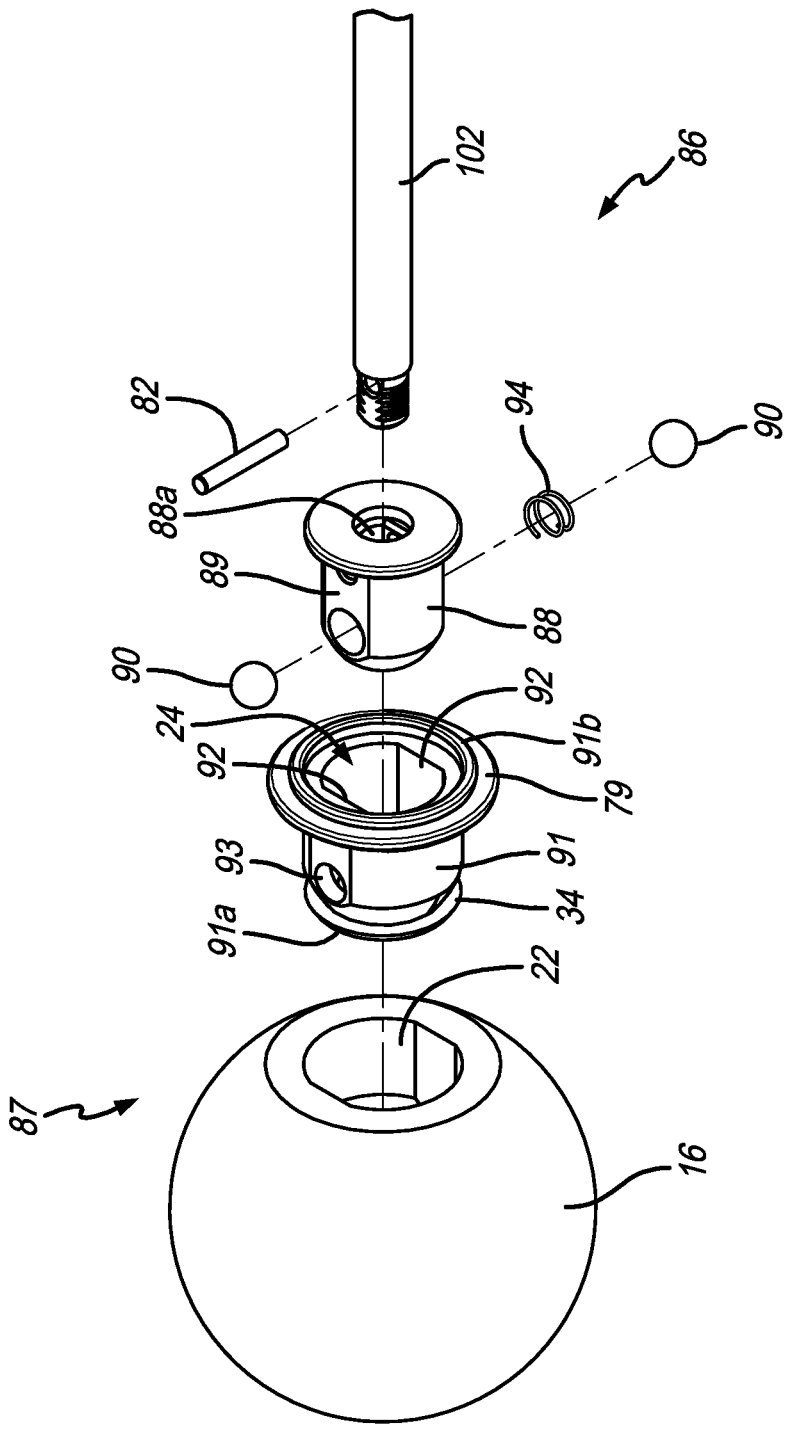

FIG. 11

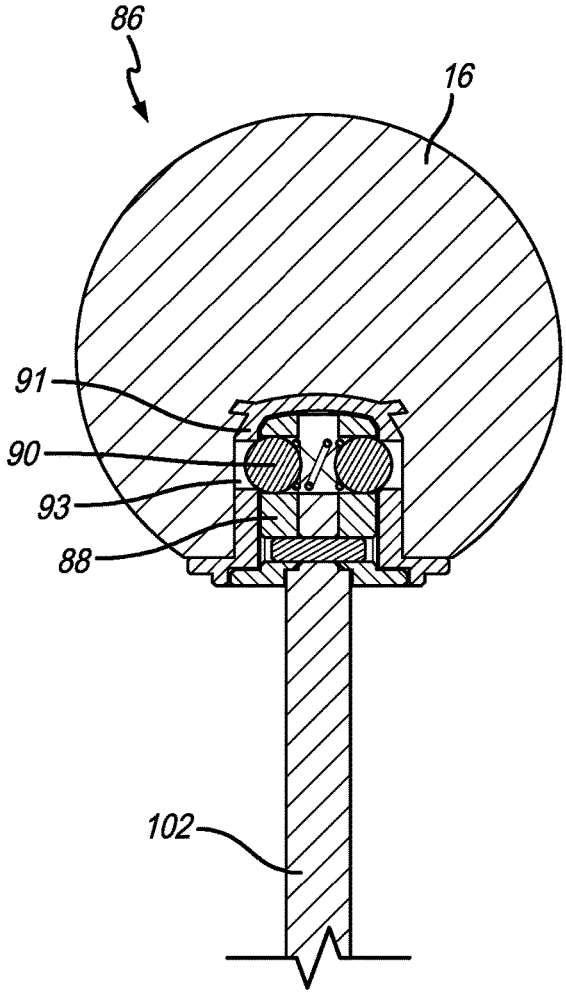
86
16
91
90
93
88
102

FIG. 12

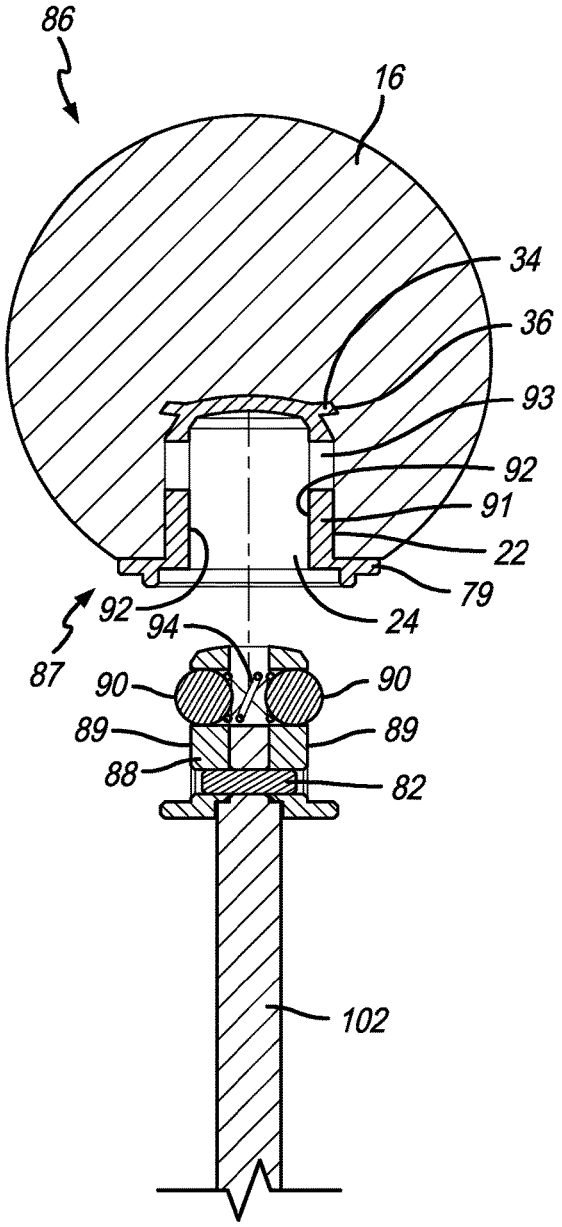
86
16
34
36
93
92
91
22
79
24
92
94
87
90
90
89
89
88
82
102

FIG. 13

TREATMENT ELEMENT ATTACHMENT SYSTEM

FIELD OF THE INVENTION

The present invention relates generally to a system for attaching a treatment element to a reciprocal treatment device.

BACKGROUND OF THE INVENTION

Therapeutic treatment or massage devices may include interchangeable treatment devices. However, the mechanism for changing the components may be complicated. Furthermore, due to the vibrations of the device, the components may come loose during use. Accordingly, a need exists for a system that overcomes these issues.

SUMMARY OF THE PREFERRED EMBODIMENTS

In accordance with a first aspect of the present invention there is provided a treatment assembly for securing a treatment member to a shaft that includes the treatment member and a female attachment member. The treatment member defines a longitudinal axis, and has a distal end and a proximal end. The proximal end includes an attachment recess defined therein. The female attachment member has a distal end, a proximal end, and a shaft recess defined in the proximal end. The female attachment member is secured in the attachment recess of the treatment member. The shaft recess is defined by an interior surface that includes a first flat surface. The interior surface includes a first detent defined therein. When the shaft is received in the shaft recess, the first flat surface is operatively engaged with a first opposing flat surface on a male attachment member and a first ball is biased into the first detent. Preferably, the first detent is defined in the first flat surface.

In a preferred embodiment, the interior surface includes a second flat surface, and a second detent defined therein. When the shaft is received in the shaft recess, the second flat surface is operatively engaged with a second opposing flat surface on the male attachment member and a second ball is biased into the second detent. Preferably, the first detent is defined in the first flat surface and the second detent is defined in the second flat surface. In a preferred embodiment, the first and second flat surfaces of the female attachment member are substantially parallel to one another.

In accordance with another aspect of the present invention there is provided an attachment system for securing a treatment member to a shaft. The attachment system includes the treatment member, a female attachment member and a male attachment member. The treatment member defines a longitudinal axis and has a distal end and a proximal end. The proximal end includes an attachment recess defined therein. The female attachment member has a distal end, a proximal end, and a shaft recess defined in the proximal end. The female attachment member is secured in the attachment recess of the treatment member. The shaft recess is defined by an interior surface that includes a first flat surface. The interior surface includes one of a first detent defined therein or a first ball biased therefrom. The male attachment member is disposed in the shaft recess and includes an exterior surface with at least a first opposing flat surface. The exterior surface includes the other of a first detent defined therein or a first ball biased therefrom. The first flat surface is operatively engaged with the first opposing flat surface and the first ball is biased into the first detent.

In a preferred embodiment, the first detent is defined in the inner surface of the shaft recess and the first ball is biased outwardly from the exterior surface of the male attachment member. Preferably, the first detent is defined in the first flat surface. In a preferred embodiment, the interior surface of the female attachment member includes a second flat surface and a second detent defined therein. The exterior surface of the male attachment member includes a second opposing flat surface and a second ball biased outwardly therefrom, and the second flat surface is operatively engaged with the opposing second flat surface on the male attachment member and the second ball is biased into the second detent. Preferably, the first detent is defined in the first flat surface, the second detent is defined in the second flat surface, the first ball is biased outwardly from the first opposing flat surface and the second ball is biased outwardly from the second opposing flat surface. In a preferred embodiment, the first and second flat surfaces of the female attachment member are substantially parallel to one another and the first and second opposing flat surfaces of the male attachment member are substantially parallel to one another.

In accordance with another aspect of the present invention there is provided an attachment system for securing a treatment member to a shaft. The attachment system includes the treatment member, a female attachment member, a disc and a male attachment member. The treatment member defines a longitudinal axis and has a distal end and a proximal end. The proximal end includes an attachment recess defined therein. The female attachment member has a distal end, a proximal end, and a shaft recess defined in the proximal end. The female attachment member is secured in the attachment recess of the treatment member. The shaft recess is defined by an interior surface that includes a first flat surface. The female attachment member includes at least one spring biased ball extending upwardly therefrom. The male attachment member is disposed in the shaft recess and includes at least one securing protrusion extending upwardly therefrom. The disc is positioned above the male attachment member and includes at least one securing opening defined therein. The securing protrusion is received in the securing opening. The disc includes at least one detent defined therein and the spring biased ball is received in the detent.

In a preferred embodiment, the male attachment member includes a plurality of circularly arranged securing protrusions extending upwardly therefrom and the disc includes a plurality of circularly arranged securing openings defined therein that receive the securing protrusions. Preferably, the female attachment member includes at least two spring biased balls extending upwardly therefrom. The disc includes more than two detents defined therein, and the detents are arranged circularly. In a preferred embodiment, the male attachment member includes exterior threads and the female attachment member includes interior threads. Preferably, the shaft extends through central openings in the disc and the male attachment member.

In accordance with another aspect of the present invention there is provided a method of attaching the treatment assembly to the male attachment member. The method includes inserting and threading the male attachment member into the shaft opening of the female attachment member, pushing the spring biased ball inwardly or downwardly with the bottom surface of the disc, rotating the treatment assembly until the spring biased ball is biased upwardly into the detent.

In accordance with another aspect of the present invention there is provided a treatment assembly for securing a treat-

ment member to a shaft. The treatment assembly includes the treatment member, which defines a longitudinal axis and has a distal end and a proximal end. The proximal end includes an attachment recess defined therein. A magnet is disposed within the attachment recess, such that when the shaft is received in the attachment recess a distal end of the shaft is magnetically attracted to the magnet. In a preferred embodiment, the attachment system further includes a female attachment member having a distal end, a proximal end, and a shaft recess defined in the proximal end, wherein the female attachment member is secured in the attachment recess of the treatment member, wherein the magnet is secured within the female attachment member and is communicated with the shaft recess, whereby when the shaft is received in the shaft recess, the distal end of the shaft is magnetically attracted to the magnet. In a preferred embodiment, the magnet recess is defined in the distal end of the female attachment member, wherein the magnet is secured in the magnet recess, and wherein an opening is defined between the magnet recess in the shaft recess to communicate the shaft recess and the magnet. Preferably, the female attachment member is internally threaded, and wherein the shaft includes external threads for mating with the female attachment member.

In a preferred embodiment, the shaft extends through a male attachment member that is secured thereto and the external threads are located on the male attachment member. Preferably, the female attachment member includes an annular flange protruding outwardly from an outer surface thereof, the treatment member includes an annular groove defined in an inner surface thereof, and the annular flange is received in the annular groove. Preferably, the annular flange is located radially outwardly from the magnet. In a preferred embodiment, the treatment member includes an annular ridge protruding inwardly from the inner surface thereof, the female attachment member includes an annular groove defined in the outer surface thereof, and the annular ridge is received in the annular groove.

In a preferred embodiment, the treatment member includes a compressible portion disposed between the distal end and the proximal end and the treatment member is hollow.

The attachment system can be used, for example, with the reciprocal treatment devices taught in U.S. Patent Publication Nos. 2016/0367425 and 2017/0027798, and U.S. patent application Ser. No. 15/458,920, filed Mar. 14, 2017, the entireties of which are incorporated by reference herein.

BRIEF DESCRIPTION OF THE DRAWINGS

FIG. **1** is an elevational view of a reciprocal treatment device with a treatment member attached thereto via an attachment system in accordance with a preferred embodiment of the present invention;

FIG. **2** is an exploded elevational view of the attachment system of FIG. **1**;

FIG. **3** is a cross-sectional elevational view of the treatment member attached to the shaft of the reciprocal treatment device using the attachment system;

FIG. **4** is a cross-sectional elevational view of the treatment member unattached to the shaft of the reciprocal treatment device;

FIG. **5** is an exploded perspective view of a treatment member that includes an attachment system in accordance with another preferred embodiment of the present invention;

FIG. **6** is a cross-sectional elevational view of the treatment member of FIG. **5** attached to the shaft of the reciprocal treatment device using the attachment system;

FIG. **7** is a cross-sectional elevational view of the treatment member of FIG. **5** unattached to the shaft of the reciprocal treatment device;

FIG. **8** is an exploded perspective view of a treatment member that includes an attachment system in accordance with another preferred embodiment of the present invention;

FIG. **9** is a cross-sectional elevational view of the treatment member of FIG. **8** attached to the shaft of the reciprocal treatment device using the attachment system;

FIG. **10** is a cross-sectional elevational view of the treatment member of FIG. **8** unattached to the shaft of the reciprocal treatment device;

FIG. **11** is an exploded perspective view of a treatment member that includes an attachment system in accordance with another preferred embodiment of the present invention;

FIG. **12** is a cross-sectional elevational view of the treatment member of FIG. **11** attached to the shaft of the reciprocal treatment device using the attachment system; and

FIG. **13** is a cross-sectional elevational view of the treatment member of FIG. **11** unattached to the shaft of the reciprocal treatment device.

Like numerals refer to like parts throughout the several views of the drawings.

DETAILED DESCRIPTION OF THE PREFERRED EMBODIMENTS

The following description and drawings are illustrative and are not to be construed as limiting. Numerous specific details are described to provide a thorough understanding of the disclosure. However, in certain instances, well-known or conventional details are not described in order to avoid obscuring the description. References to one or an embodiment in the present disclosure can be, but not necessarily are references to the same embodiment; and, such references mean at least one of the embodiments.

Reference in this specification to "one embodiment" or "an embodiment" means that a particular feature, structure, or characteristic described in connection with the embodiment is included in at least one embodiment of the—disclosure. The appearances of the phrase "in one embodiment" in various places in the specification are not necessarily all referring to the same embodiment, nor are separate or alternative embodiments mutually exclusive of other embodiments. Moreover, various features are described which may be exhibited by some embodiments and not by others. Similarly, various requirements are described which may be requirements for some embodiments but not other embodiments.

The terms used in this specification generally have their ordinary meanings in the art, within the context of the disclosure, and in the specific context where each term is used. Certain terms that are used to describe the disclosure are discussed below, or elsewhere in the specification, to provide additional guidance to the practitioner regarding the description of the disclosure. For convenience, certain terms may be highlighted, for example using italics and/or quotation marks: The use of highlighting has no influence on the scope and meaning of a term; the scope and meaning of a term is the same, in the same context, whether or not it is highlighted.

It will be appreciated that the same thing can be said in more than one way. Consequently, alternative language and

synonyms may be used for any one or more of the terms discussed herein. No special significance is to be placed upon whether or not a term is elaborated or discussed herein. Synonyms for certain terms are provided. A recital of one or more synonyms does not exclude the use of other synonyms. The use of examples anywhere in this specification including examples of any terms discussed herein is illustrative only, and is not intended to further limit the scope and meaning of the disclosure or of any exemplified term. Likewise, the disclosure is not limited to various embodiments given in this specification.

Without intent to further limit the scope of the disclosure, examples of instruments, apparatus, methods and their related results according to the embodiments of the present disclosure are given below. Note that titles or subtitles may be used in the examples for convenience of a reader, which in no way should limit the scope of the disclosure. Unless otherwise defined, all technical and scientific terms used herein have the same meaning as commonly understood by one of ordinary skill in the art to which this disclosure pertains. In the case of conflict, the present document, including definitions, will control.

It will be appreciated that terms such as "front," "back," "top," "bottom," "side," "short," "long," "up," "down," "aft," "forward," "inboard," "outboard" and "below" used herein are merely for ease of description and refer to the orientation of the components as shown in the figures. It should be understood that any orientation of the components described herein is within the scope of the present invention.

Referring now to the drawings, wherein the showings are for purposes of illustrating the present invention and not for purposes of limiting the same, FIGS. **1-4** show an attachment system **10** in accordance with a preferred embodiment of the present invention. In a preferred embodiment, the attachment system **10** is used to secure a treatment element or member to the shaft of a reciprocal treatment device that is used for massage or therapeutic treatment. However, this is not a limitation on the present invention and it will be appreciated by those of ordinary skill in the art that the attachment system can be used for attaching any removable or replaceable component to the distal end of the shaft. Accordingly, as used herein, the term treatment device, treatment element or treatment assembly refers to any component that can be removably replaced on the end of the shaft and is not limited to a massage treatment element.

FIG. **1** shows an exemplary reciprocal treatment device **100** having a shaft **102** that reciprocates in a linear motion. The shaft includes a treatment assembly **12** attached to the distal end **104** thereof by an attachment system **10**. Details of the attachment system **10** are shown in FIGS. **2-4**. As shown in FIG. **2**, in a preferred embodiment, the attachment system **10** generally includes the treatment assembly **12** and a male attachment member **14** that is configured to be attached to the shaft **102**.

As shown in FIGS. **2-4**, the treatment assembly **12** generally includes a treatment member **16** that defines a longitudinal axis A**1** (see FIG. **1**), a magnet **18** and a female attachment member **20**. The treatment member **16** includes a distal end **16***a* and a proximal end **16***b* with an attachment recess **22** defined therein. The female attachment member **20** includes a distal end **20***a* and a proximal end **20***b* and is secured in the attachment recess **22**. The female attachment member **20** preferably includes a shaft recess **24** defined adjacent the proximal end **20***b* and a magnet recess **26** defined adjacent the distal end **20***a*. In a preferred embodiment, the female attachment member **20** is made of a plastic and the treatment member **16** is made of made of an elastomeric or compliant material (e.g., rubber, foam, silicone, plastic, PVC). In another embodiment the treatment member **16** and/or the female attachment member can be made of metal, a fabric or any other material. The treatment member can also be hollow (like a tennis ball).

In a preferred embodiment, the magnet **18** is disposed within the magnet recess **26** and is communicated with the shaft recess **24** by a magnet opening **28**. As is further described below, when the shaft **102** is received in the shaft recess **24**, the distal end **104** of the shaft **102** is magnetically attracted to the magnet **18**. In an exemplary embodiment, the magnet **18** has a diameter of about 15 mm and a thickness of about 3 mm, with a pull rating of about 3.24 kg. However, this is only exemplary. The magnet can be any desired size. In another embodiment, a magnet can also be included in the distal end **104** of the shaft **102** and can interact with magnet **18** in the treatment member **16**. In yet another embodiment, the treatment member **16** can include a ferrous metal therein that is attracted to the magnet in the distal end of the shaft.

In a preferred embodiment, the female attachment member **20** includes internal threads **30**, and the male attachment member **14** includes external threads **32** for mating with the female attachment member **20**. The male attachment member **14** includes a central opening through which the shaft **102** extends. In a preferred embodiment, the distal end **104** of the shaft **102** protrudes (e.g., approximately 1 mm) from the male attachment member **14** and has a chamfered end. This allows the protruding portion of the shaft **102** to extend through the magnet opening **28** and provides for metal on metal contact with the magnet **18**. In a preferred embodiment, the male attachment member is made of plastic. However, this is not limiting and the male attachment member can be made of other materials, such as metal, wood, etc. In another embodiment, the male attachment member can be made of metal or the shaft itself can include the external threads for mating with the female attachment member and/or the treatment member.

It will be appreciated by those of ordinary skill in the art that the female attachment member can be secured within the attachment recess in many different ways. In a preferred embodiment, the treatment member **16** is molded around the female attachment member **20**. In other embodiments, the female attachment member can be adhered, glued, welded, snap fit, friction fit or any other known method within the treatment member **16**. As shown in FIGS. **3** and **4**, in a preferred embodiment, the female attachment member **20** and treatment member **16** include complementary grooves and rings or flanges that help secure the female attachment member **20** in the attachment recess **22**. In a preferred embodiment, the female attachment member **20** includes an annular flange **34** protruding outwardly from an outer surface thereof and the treatment member **16** includes an annular groove **36** defined in an inner surface thereof. The annular flange **34** is received in the annular groove **36**. In preferred embodiment, the annular flange **34** is located radially outwardly from the magnet **18**. However, this is not a limitation on the present invention and the annular flange **34** or multiple annular flanges can be located anywhere on the female attachment member **20**. In a preferred embodiment, the treatment member includes an annular ridge **38** protruding inwardly from the inner surface thereof and the female attachment member **20** includes an annular groove **40** defined in the outer surface thereof. The, annular ridge **38** is received in the annular groove **40** to help secure the female attachment member **20** in the attachment recess **22**. The female attachment member **20** can also include an

external annular flange **42** that contacts the proximal end **16***b* of the treatment member **16**.

In use, to connect the treatment assembly **12** on the shaft **102**, the female attachment member **20** is threaded onto the male attachment member **14** until the distal end **104** of the metal shaft **102** comes into contact with or is closely adjacent to magnet **18**. The reciprocal treatment device **100** can then be used to massage the user's body part. To change treatment assemblies, the first treatment assembly is unthreaded from the male attachment member and a second treatment assembly is threaded thereon.

FIGS. **5-7** show another embodiment of a treatment assembly **50** that can be secured to the shaft **102** of a reciprocal treatment device using the attachment system **10**. As shown in the drawings, in a preferred embodiment, the treatment assembly **50** includes similar components to the treatment assembly described above, but includes a differently shaped treatment member **52** and female attachment member **54**. Preferably, the treatment member **52** is made of an elastomeric or compliant material (e.g., rubber, silicone), is generally hollow, and includes a compressible portion **56** between the distal and proximal ends **52***a* and **52***b*. With this arrangement, during use, the treatment member compresses or collapses, thereby providing a softer impact than the treatment member **16** described above.

As shown in FIGS. **5-7**, the treatment member **52** includes a first annular outwardly protruding portion **58**, a second annular outwardly protruding portion **60** and the compressible portion **56** disposed therebetween. In preferred embodiment, the second annular outwardly protruding portion **60** has a larger diameter than the first annular outwardly protruding portion **58**. The compressible portion **56** also includes an annular inwardly protruding portion **62**. The compressible portion **56** first annular outwardly protruding portion **58**, second annular outwardly protruding portion **60** and annular inwardly protruding portion **62** all work together to provide compression and spring back of the treatment member **52** during use. In other words it has a spring like action that absorbs some of the impact to the body or subject of the treatment.

The female attachment member **54** preferably includes an annular collar **64** that interacts with the inner surface of the treatment member **52** to secure the two components together. The annular collar **64** includes a ridge **66** thereon that is received in a trough **68** created by the first annular outwardly protruding portion **58**. It will be appreciated that the hollow compressible treatment member **52** can be used with any of the attachment systems taught herein and shown in any of the drawings. In other words, the hollow compressible treatment member **52** is not limited to the magnet attachment system, but can also be used with the attachment systems shown in FIGS. **8-13** below.

FIGS. **8-10** show another embodiment of an attachment system **70** that can be used with a reciprocal treatment device. As shown in FIG. **8**, in a preferred embodiment, the attachment system **70** generally includes a treatment assembly **71**, a male attachment member **72**, and a disc **74**. The male attachment member **72** and disc **74** both include central openings **72***a* and **74***a* and are configured to be attached to the shaft **102**. Preferably, the male attachment member **72** includes at least one and preferably a plurality of circularly arranged securing protrusions **73** extending upwardly therefrom that are received in circularly arranged securing openings **75** defined in the disc **74** (see FIGS. **9-10**). It will be appreciated that there can be a single securing opening **75** and a single securing protrusion **73**. Furthermore, "circularly arranged" can include two or more securing protrusions **73** and securing openings **75** arranged around the male attachment member **72** and disc **74**. The combination of the securing protrusions **73** and securing openings **75** prevent the male attachment member **72** and disc **74** from rotating with respect to one another when securing the treatment assembly **71** thereon, as described below. In a preferred embodiment, the disc also includes at least one and preferably a plurality of intersecting shaft channels defined therein that each extend between opposing securing openings **75** and through the central opening **74***a* of the disc. The shaft channels allow the shaft **82** to pass therethrough when assembling the disc **74** onto the shaft **102**.

In a preferred embodiment, the treatment assembly **71** generally includes a treatment member **16**, and a female attachment member **76**. The treatment member **16** includes a distal end **16***a* and a proximal end **16***b* with an attachment recess **22** defined therein. The female attachment member **76** includes a distal end **76***a* and a proximal end **76***b* and is secured in the attachment recess **22**. The female attachment member **76** preferably includes a shaft recess **24** defined adjacent the proximal end thereof.

In a preferred embodiment, the female attachment member **76** includes at least one and preferably a plurality (two are shown in the drawings) of spring biased balls **78** or plungers that cooperate with openings or detents **77** defined in the disc **74** or in the male attachment member **72**, as described below. Preferably, the female attachment member **76** includes an annular flange **79** extending outwardly from the main body portion that includes recesses **80** in which the balls **78** are seated. The recesses **80** can include a spring **81** or any other type of biasing mechanism that biases the balls **78** outwardly or upwardly.

In a preferred embodiment, the female attachment member **76** includes internal threads **30**, and the male attachment member **72** includes external threads **32** for mating with the female attachment member **76**. In use, to connect the treatment assembly **71** on the shaft **102**, the female attachment member **76** is threaded onto the male attachment member **72** until the balls **78** are received and biased into the detents **77**, as shown in FIG. **9**. The reciprocal treatment device **100** can then be used to massage the user's body part. To change treatment assemblies, the first treatment assembly is unthreaded from the male attachment member and a second treatment assembly is threaded thereon. It will be appreciated by those of ordinary skill in the art that the springs **81** are chosen with the appropriate spring force so that the balls **78** are biased with enough outward force to keep them in the detents **77** during use of the reciprocal treatment device (to prevent rotation and accidental separation of the treatment assembly **71** from the shaft), but, when the treatment assembly **71** is unthreaded, due to the curved surface of the balls **78**, the edges of the detents **77** push the balls **78** inwardly so that they come out of the detents **77** and the treatment assembly **71** can be removed from the shaft.

In a preferred embodiment, the male attachment member **72** and shaft **102** include transverse openings defined therethrough that receive a shaft **82** that secures the male attachment member **72** on the shaft **102**. In another embodiment, the male attachment member **72** can be secured to the shaft **102** as described above in the first embodiment or by any other method (glue, welding, adhesive, threading, etc.). A magnet can also be included in this embodiment, if desired.

FIGS. **11-13** show another embodiment of an attachment system **86** that can be used with a reciprocal treatment device. As shown in FIG. **11**, in a preferred embodiment, the attachment system **86** generally includes a treatment assembly **87**, and a male attachment member **88**. The male

attachment member **88** includes a shaft recess or central opening **88***a* and is configured to be attached to the shaft **102**. Preferably, the male attachment member **88** is generally round, but includes first and second opposing flat surfaces **89** on opposite sides thereof (a single flat surface is within the scope of the present invention). The male attachment member also includes balls **90** that are spring biased outwardly from the opposing flat surfaces **89**. Any biasing mechanism is within the scope of the present invention. In a preferred embodiment, one or more springs **94** bias the balls **90** outwardly.

In a preferred embodiment, the treatment assembly **87** generally includes a treatment member **16**, and a female attachment member **91**. The treatment member **16** includes a distal end **16***a* and a proximal end **16***b* with an attachment recess **22** defined therein. The female attachment member **91** includes a distal end **91***a* and a proximal end **91***b* and is secured in the attachment recess **22**. The female attachment member **91** preferably includes a shaft recess **24** defined adjacent the proximal end thereof. The female shaft recess includes first and second flat surfaces **92** that have detents **93** defined therein. The balls **90** on the male attachment member **88** are configured to be received in and cooperate with the detents in the female attachment member **91**. Furthermore, the first and second opposing flat surfaces **89** of the male attachment member **88** are configured to cooperate with the first and second flat surfaces **92** of the female attachment member **91** to prevent the two from rotating with respect to one another. In another embodiment, the interior surface of the female attachment and the exterior surface of the male attachment member can be square or rectangular or include other shapes that allow the female attachment member and male attachment member to mate and be prevented from rotating with respect to one another. It will be appreciated by those of ordinary skill in the art that a single flat surface on each will prevent rotation.

To change treatment assemblies, the first treatment assembly is pulled axially off of the male attachment member and a second treatment assembly is placed on the male attachment member. It will be appreciated by those of ordinary skill in the art that the spring(s) **94** are chosen with the appropriate spring force so that the balls **90** are biased with enough outward force to keep them in the detents **93** during use of the reciprocal treatment device, but, when the treatment assembly **87** is pulled outwardly (away from the shaft in an axial direction), due to the curved surface of the balls **90**, the edges of the detents **93** push the balls **90** inwardly so that they come out of the detents **93** and the treatment assembly **87** can be removed from the shaft.

Unless the context clearly requires otherwise, throughout the description and the claims, the words "comprise," "comprising," and the like are to be construed in an inclusive sense, as opposed to an exclusive or exhaustive sense; that is to say, in the sense of "including, but not limited to." As used herein, the terms "connected," "coupled," or any variant thereof, means any connection or coupling, either direct or indirect, between two or more elements; the coupling of connection between the elements can be physical, logical, or a combination thereof. Additionally, the words "herein," "above," "below," and words of similar import, when used in this application, shall refer to this application as a whole and not to any particular portions of this application. Where the context permits, words in the above Detailed Description of the Preferred Embodiments using the singular or plural number may also include the plural or singular number respectively. The word "or" in reference to a list of two or more items, covers all of the following interpretations of the word: any of the items in the list, all of the items in the list, and any combination of the items in the list.

The above-detailed description of embodiments of the disclosure is not intended to be exhaustive or to limit the teachings to the precise form disclosed above. While specific embodiments of and examples for the disclosure are described above for illustrative purposes, various equivalent modifications are possible within the scope of the disclosure, as those skilled in the relevant art will recognize. Further, any specific numbers or dimensions noted herein are only examples: alternative implementations may employ differing values, measurements, dimensions or ranges.

The teachings of the disclosure provided herein can be applied to other systems, not necessarily the system described above. The elements and acts of the various embodiments described above can be combined to provide further embodiments. Any measurements described or used herein are merely exemplary and not a limitation on the present invention. Other measurements can be used. Further, any specific materials noted herein are only examples: alternative implementations may employ differing materials.

Any patents and applications and other references noted above, including any that may be listed in accompanying filing papers, are incorporated herein by reference in their entirety. Aspects of the disclosure can be modified, if necessary, to employ the systems, functions, and concepts of the various references described above to provide yet further embodiments of the disclosure.

These and other changes can be made to the disclosure in light of the above Detailed Description of the Preferred Embodiments. While the above description describes certain embodiments of the disclosure, and describes the best mode contemplated, no matter how detailed the above appears in text, the teachings can be practiced in many ways. Details of the system may vary considerably in its implementation details, while still being encompassed by the subject matter disclosed herein. As noted above, particular terminology used when describing certain features or aspects of the disclosure should not be taken to imply that the terminology is being redefined herein to be restricted to any specific characteristics, features or aspects of the disclosure with which that terminology is associated. In general, the terms used in the following claims should not be construed to limit the disclosures to the specific embodiments disclosed in the specification unless the above Detailed Description of the Preferred Embodiments section explicitly defines such terms. Accordingly, the actual scope of the disclosure encompasses not only the disclosed embodiments, but also all equivalent ways of practicing or implementing the disclosure under the claims.

Accordingly, although exemplary embodiments of the invention have been shown and described, it is to be understood that all the terms used herein are descriptive rather than limiting, and that many changes, modifications, and substitutions may be made by one having ordinary skill in the art without departing from the spirit and scope of the invention.

What is claimed is:

1. A treatment assembly for securing a treatment member to a shaft, the treatment assembly comprising:

the treatment member, wherein the treatment member defines a longitudinal axis and has a distal end and a proximal end, wherein the proximal end includes an attachment recess defined therein,

a female attachment member having a distal end, a proximal end, and a shaft recess defined in the proximal end, wherein the female attachment member is secured

in the attachment recess of the treatment member, wherein the shaft recess is defined by an interior surface that includes first and second opposing flat surfaces, wherein the first flat surface includes a first detent defined therein and the second flat surface includes a second detent defined therein, whereby when the shaft is received in the shaft recess, the first flat surface is operatively engaged with a first opposing flat surface on a male attachment member and a first ball is biased into the first detent and the second flat surface is operatively engaged with a second opposing flat surface on a male attachment member and a second ball is biased into the second detent.

2. The treatment assembly of claim **1** wherein the interior surface includes first and second opposing curved surfaces.

3. The treatment assembly of claim **2** wherein the first and second flat surfaces of the female attachment member are substantially parallel to one another.

4. An attachment system for securing a treatment member to a shaft, the attachment system comprising:

the treatment member, wherein the treatment member defines a longitudinal axis and has a distal end and a proximal end, wherein the proximal end includes an attachment recess defined therein,

a female attachment member having a distal end, a proximal end, and a shaft recess defined in the proximal end, wherein the female attachment member is secured in the attachment recess of the treatment member, wherein the shaft recess is defined by an interior surface that includes first and second opposing flat surfaces, wherein the first flat surface includes a first detent defined therein and the second flat surface includes a second detent defined therein,

a male attachment member disposed in the shaft recess, wherein the male attachment member includes an exterior surface with first and second opposing flat surfaces, wherein a first ball is biased outwardly from the first flat surface and a second ball is biased outwardly from the second flat surface,

wherein the first flat surface of the female attachment member is operatively engaged with the first flat surface of the male attachment member and the first ball is biased into the first detent, and wherein the second flat surface of the female attachment member is operatively engaged with the second flat surface of the male attachment member and the second ball is biased into the second detent.

5. The attachment system of claim **4** wherein the interior surface of the female attachment member includes first and second opposing curved surfaces, wherein the exterior surface of the male attachment member includes first and second opposing curved surfaces.

6. The attachment system of claim **5** wherein the first and second flat surfaces of the female attachment member are substantially parallel to one another and the first and second opposing flat surfaces of the male attachment member are substantially parallel to one another.

7. The attachment system of claim **6** wherein the male attachment member includes an inclined surface on a distal end thereof.

* * * * *