US007695236B2

(12) **United States Patent**
Green

(10) **Patent No.: US 7,695,236 B2**
(45) **Date of Patent: Apr. 13, 2010**

(54) **UTILITY VEHICLE**

(76) Inventor: **Kevin J. Green**, 4419 Ricker Hwy., Blissfield, MI (US) 49228

(*) Notice: Subject to any disclaimer, the term of this patent is extended or adjusted under 35 U.S.C. 154(b) by 320 days.

(21) Appl. No.: **11/062,511**

(22) Filed: **Feb. 22, 2005**

(65) **Prior Publication Data**

US 2005/0196261 A1 Sep. 8, 2005

Related U.S. Application Data

(60) Provisional application No. 60/546,008, filed on Feb. 19, 2004.

(51) **Int. Cl.**
B60P 5/00 (2006.01)

(52) **U.S. Cl.** **414/486**; 187/237

(58) **Field of Classification Search** 414/471, 414/486; 187/237, 232

See application file for complete search history.

(56) **References Cited**

U.S. PATENT DOCUMENTS

3,452,887 A * 7/1969 Larson et al. 414/486
3,667,620 A * 6/1972 Steiro 414/680
3,912,092 A * 10/1975 Bolton et al. 414/486
4,119,222 A * 10/1978 Kaarnametsa 414/470
6,085,811 A * 7/2000 Wiemeri et al. 144/4.1
6,470,606 B1 * 10/2002 Nagahiro et al. 37/348
6,648,578 B1 * 11/2003 Rouse 414/482

* cited by examiner

Primary Examiner—Saúl J Rodríguez
Assistant Examiner—Joshua I Rudawitz
(74) *Attorney, Agent, or Firm*—Burgess Law Office, PLLC

(57) **ABSTRACT**

A versatile mobile utility cart or vehicle using either tracks, wheels or both for suspension and steering with propulsion coming from but not limited to an internal combustion engine or an electric motor. The vehicle is meant to be a utility workhorse with the ability to load and unload itself as well as drag or carry materials. The vehicle can be configured in many ways to do many tasks with the main feature being labor savings. One of the unique features of the vehicle is a loading system called a fork and foot system. For transport the forks and feet system can be raised or detached individually or as a system, this is beneficial when unloading. The foot may remain attached and used for stability. Detaching the fork and foot system as a system allows the vehicle to be used for other tasks including but not limited to: a dump vehicle; a skidder; a reel carrier; a fork lift/carrier; and a prime mover or base for brush chippers, stump cutters, tree spades and more.

18 Claims, 8 Drawing Sheets

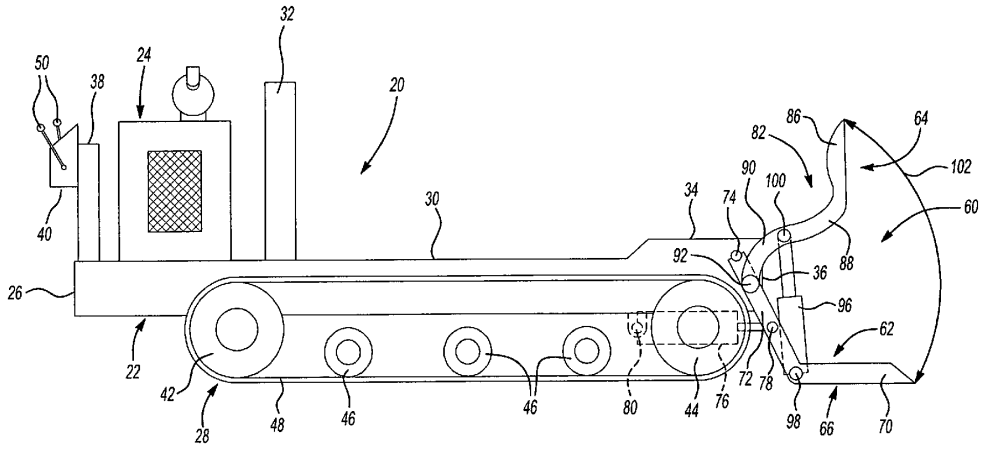

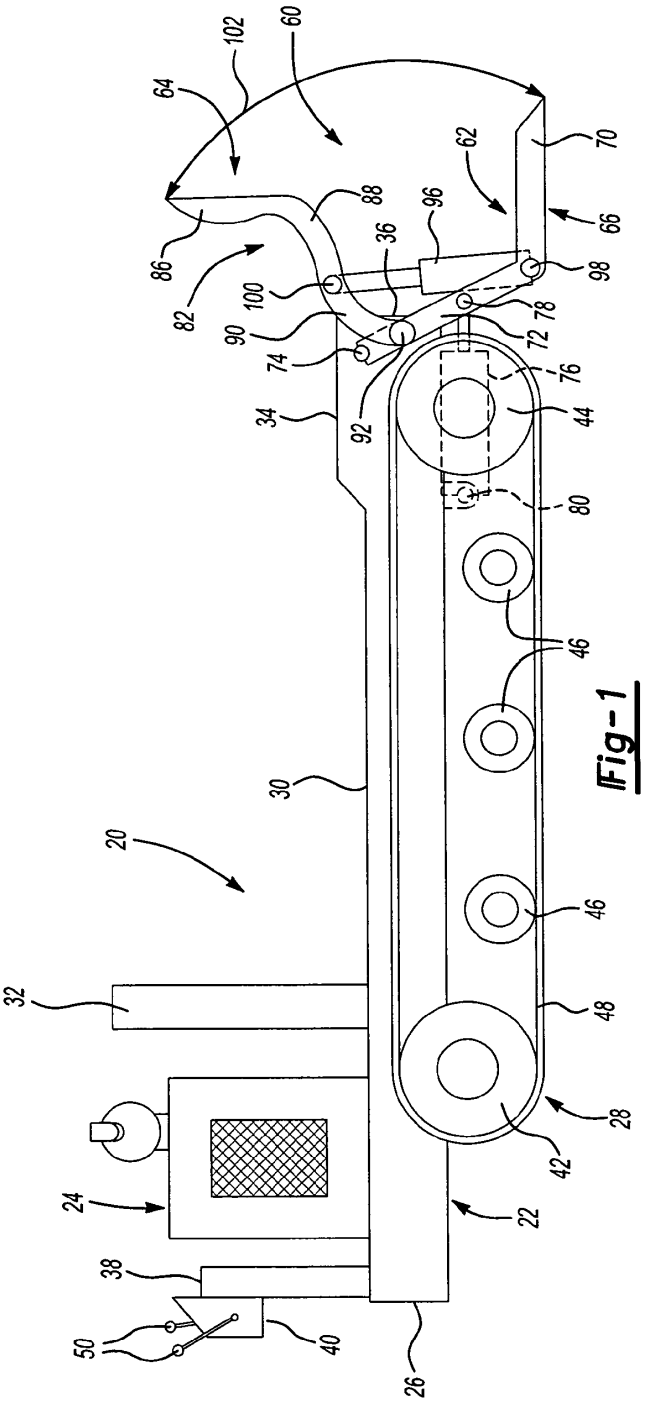
20
22
24
26
28
30
32
34
36
38
40
42
44
46
46
48
50
60
62
64
66
70
72
74
76
78
80
82
86
88
90
92
96
98
100
102

Fig-1

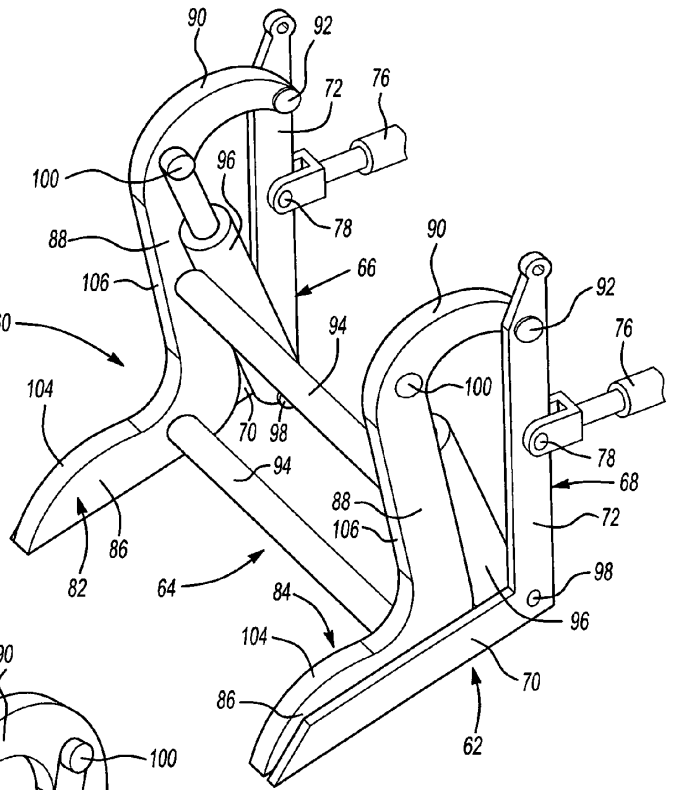
90
92
72
76
100
96
78
88
106
66
60
94
104
70
98
94
82
86
64
84
104
86
90
92
76
100
78
68
88
106
72
98
96
70
62

Fig-2

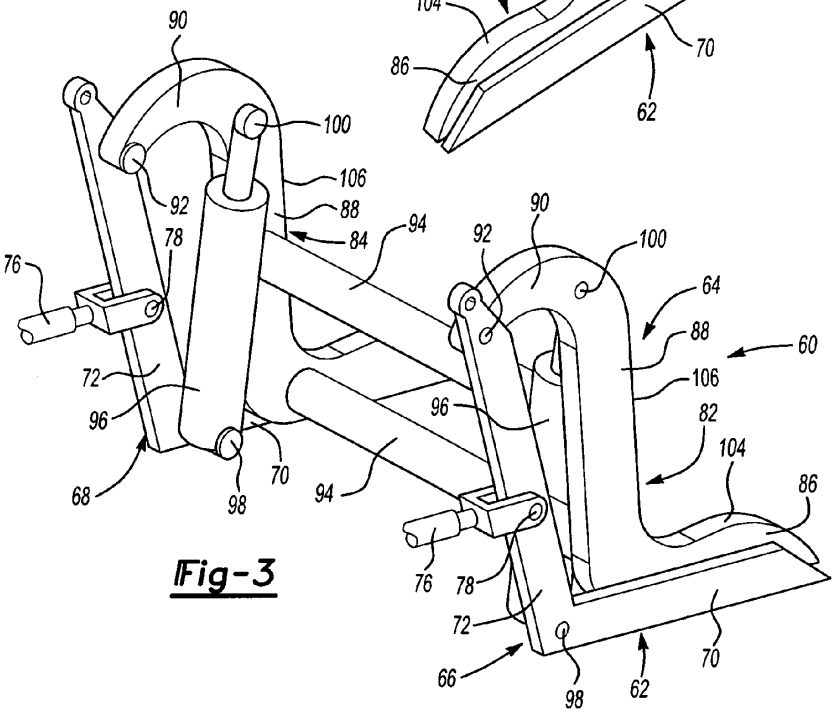
90
100
106
92
88
84
94
78
76
72
96
68
98
70
94
90
92
100
64
88
60
106
96
82
104
86
76
78
72
66
98
62
70

Fig-3

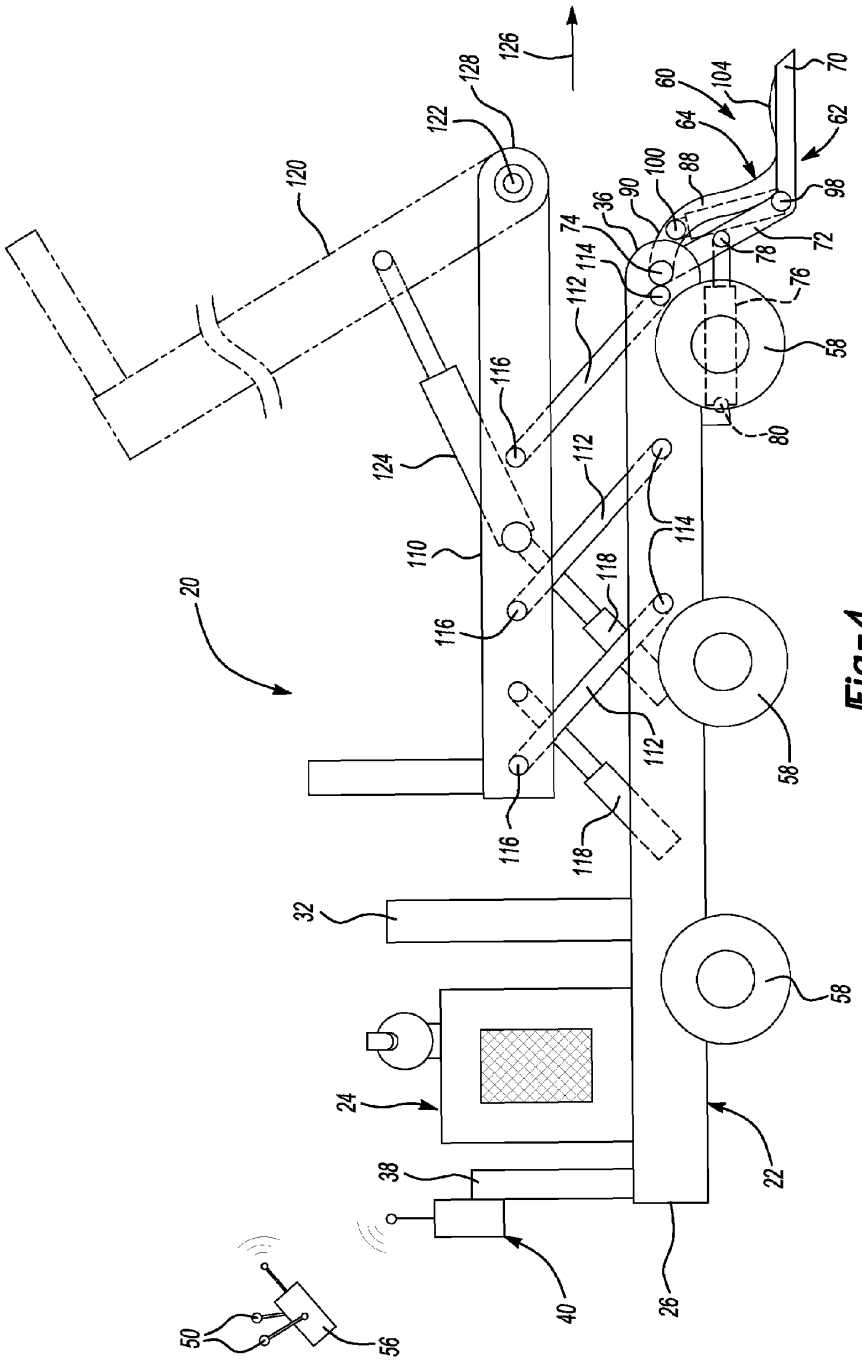
20
22
24
26
32
38
40
50
56
58
58
58
60
62
64
70
72
74
76
78
80
88
90
98
100
104
110
112
112
112
114
114
114
116
116
116
118
118
120
122
124
126
128
36

Fig-4

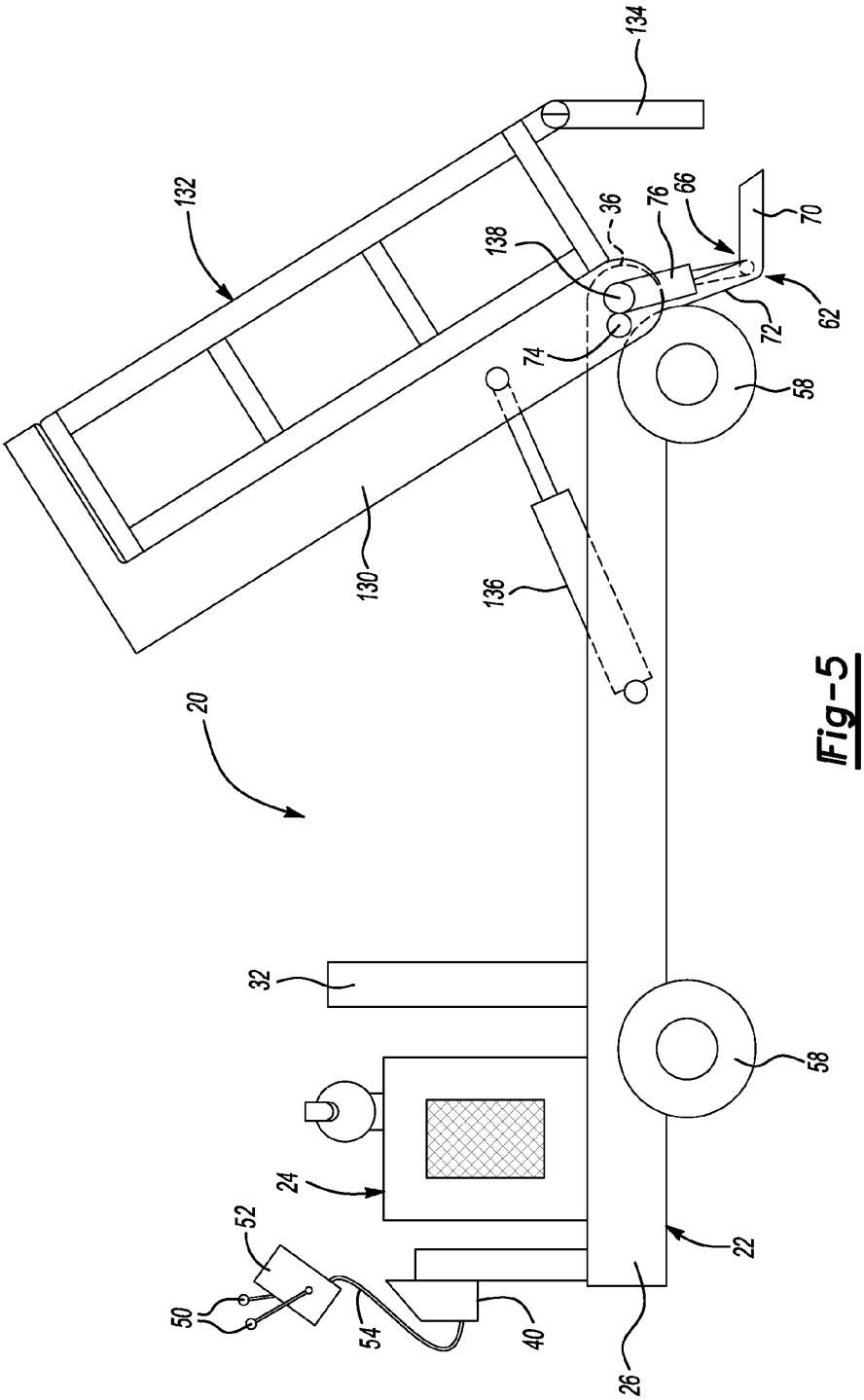
134
132
36
76
66
70
138
62
72
74
58
130
136
20
32
58
24
52
22
50
54
40
26

Fig-5

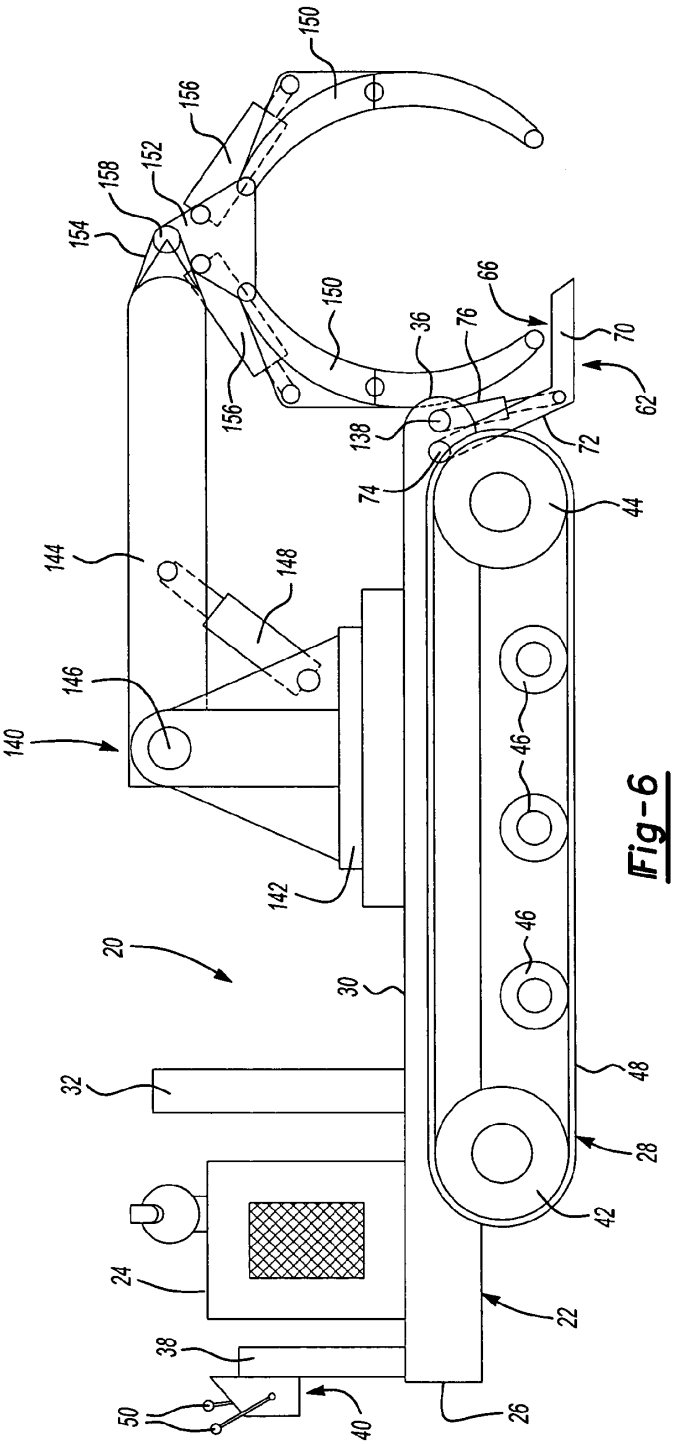
150
156
152
158
154
150
66
36
76
70
62
156
138
72
74
44
144
148
146
140
46
142
46
20
30
32
48
28
42
24
22
38
50
40
26

Fig-6

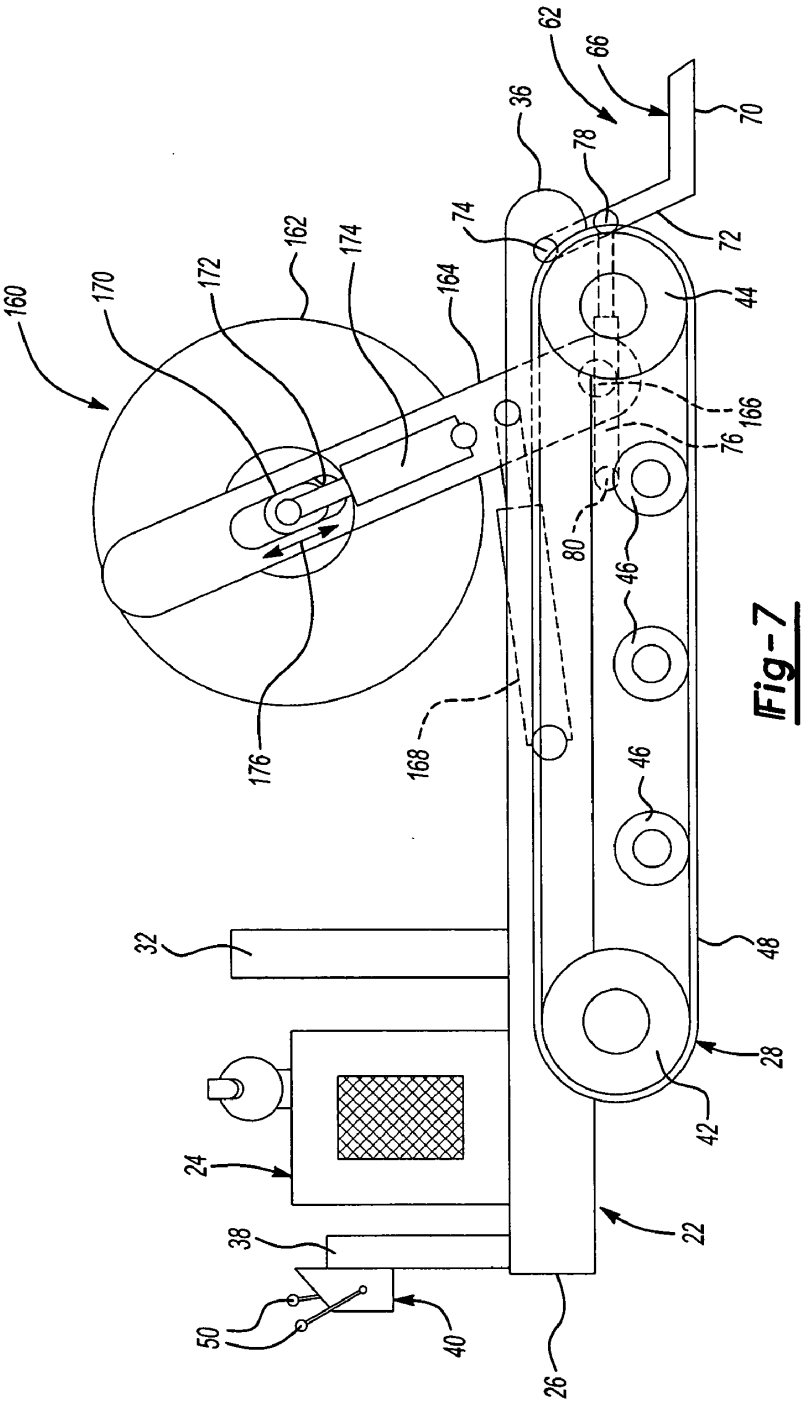
160
170
172
162
174
164
74
36
62
66
78
70
72
44
166
76
80
46
46
168
176
32
48
28
42
24
22
38
50
40
26

Fig-7

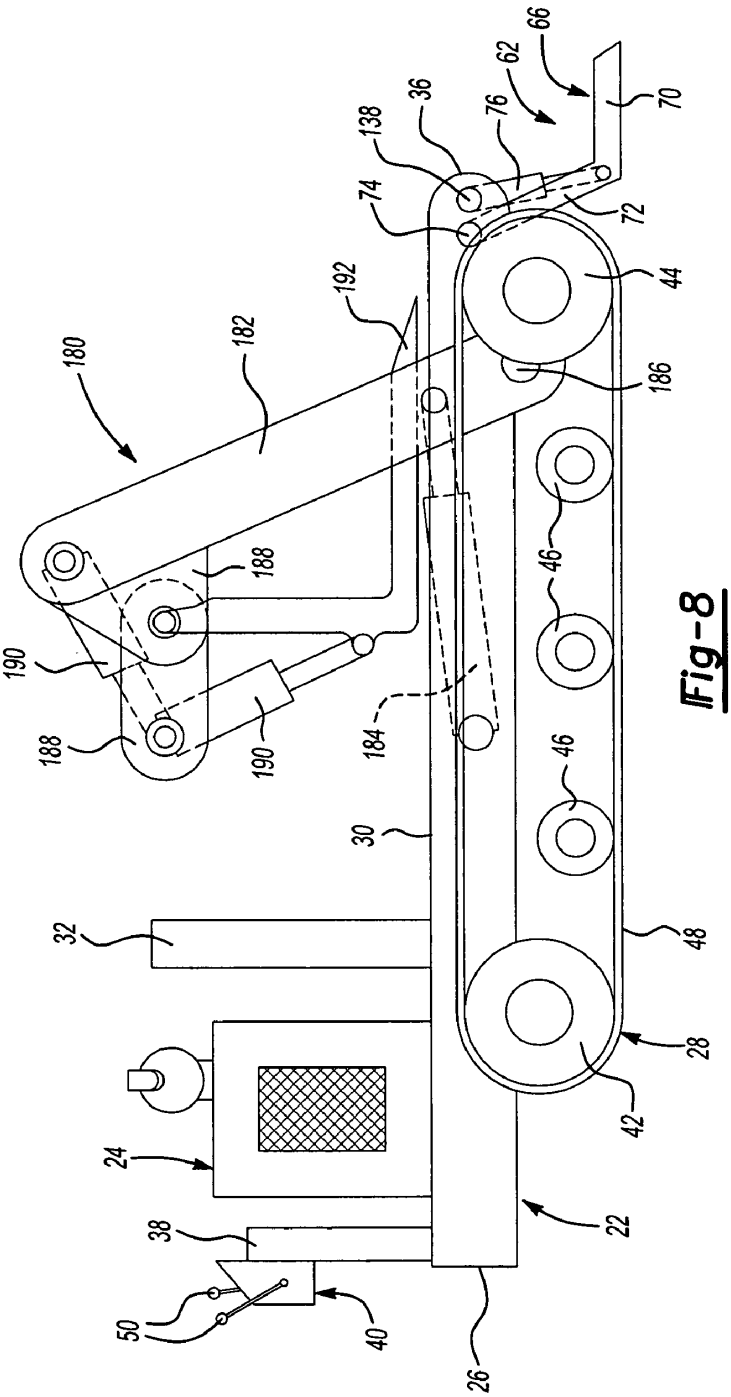
66
62
70
36
138
76
74
72
44
192
182
180
186
188
46
190
184
30
32
48
28
42
24
38
22
50
40
26

Fig-8

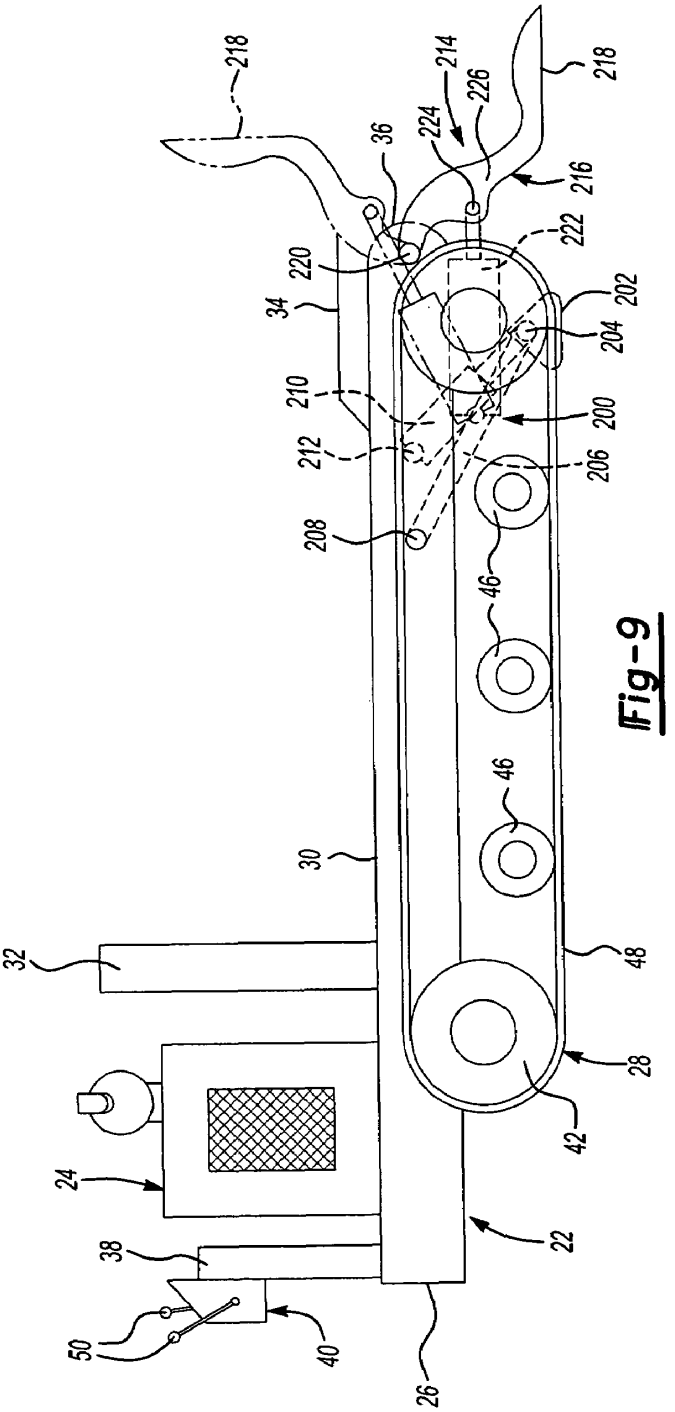
218
218
214
226
224
36
216
222
220
202
34
204
210
200
212
206
208
46
46
30
32
48
28
42
24
22
38
50
40
26

Fig-9

UTILITY VEHICLE

CROSS-REFERENCE TO RELATED APPLICATIONS

This application claims the benefit of U.S. Provisional Application No. 60/546,008, filed Feb. 19, 2004.

BACKGROUND OF THE INVENTION

1. Field of the Invention

The present invention relates generally to a mobile utility vehicle for loading, transporting and unloading materials. In addition, the utility vehicle also includes a unique loading apparatus.

2. Description of Related Art

Utility vehicles such as handcarts, hand trucks, wheelbarrows and other devices have been used for many years as labor saving devices. These devices assist an individual or laborer in performing manual labor such as moving and transporting objects and workpieces. Further, they provide assistance when working in and around areas that cannot be easily reached by larger motor operated vehicles, particularly in areas too small or confined to allow the operation of such vehicles.

For instance, many landscape operations or landscapers cannot use large motor operated vehicles when working around homes or other structures, especially in developed areas where such vehicles will not fit or cannot be maneuvered due to the confines created by home density, fences and landscapes. Further, use of such large, motor operated vehicles may be prohibited due to the damage such vehicles would cause to the landscape. Accordingly, in these instances, much of the work requires manual labor to accomplish a variety of tasks including: landscape operations, planting trees, removing trees, laying sod, or other work that requires a significant amount of materials or objects to be moved physically or with the assistance of small non-powered or manually operated implements such as those set forth above.

Accordingly, there is a need for a powered utility vehicle of a size small enough to operate in confined spaces and in urban areas that minimizes damage to the property or landscape while providing sufficient lifting, loading, transporting and unloading properties. Specifically, it is advantageous that such a vehicle be operated by a single operator thereby reducing the amount of physical or manual labor needed to perform the job or task.

SUMMARY OF THE INVENTION

The present invention is a versatile mobile utility vehicle having a power source operative to power a propulsion system and, in an additional embodiment, the utility vehicle includes a loading apparatus or system.

The loading apparatus or system may include a unique foot and fork assembly that, once attached to the utility vehicle, provides an apparatus that can lift and load items in excess of the weight of the vehicle onto the vehicle.

The present invention further provides a utility vehicle of a size and design suitable to operate in confined or small spaces with a propulsion system that reduces damage to the ground surface or area in which the vehicle is operating. The vehicle has the ability to be operated by a single operator. Further, the present invention may include a lift and load apparatus attached to the utility vehicle wherein the utility vehicle has the ability to load and unload materials or items as well as being able to drag or carry these materials or items.

Further areas of applicability of the present invention will become apparent from the detailed description provided hereinafter. It should be understood that the detailed description and specific examples, while indicating the preferred embodiment of the invention, are intended for purposes of illustration only and are not intended to limit the scope of the invention.

BRIEF DESCRIPTION OF THE DRAWINGS

The present invention will become more fully understood from the detailed description and the accompanying drawings, wherein:

FIG. **1** is a side view of a utility vehicle according to one embodiment of the present invention having a track-type drive system and a loading apparatus.

FIG. **2** is a front perspective view of the loading apparatus of FIG. **1** with portions removed for clarity.

FIG. **3** is a rear perspective view of the loading apparatus of FIG. **1** with portions removed for clarity.

FIG. **4** is an additional embodiment of the present invention illustrating the utility vehicle of the present invention with a liftable and pivotable dump platform or bed, further illustrating a multi-wheel propulsion system wherein one or all of the wheels provide a drive force.

FIG. **5** is a side view of an additional embodiment of a utility vehicle according to the present invention including a dump bucket.

FIG. **6** is a side view of an alternative embodiment of the utility vehicle according to the present invention including a claw-type loader secured to the platform or bed of the utility vehicle.

FIG. **7** is a side view of an alternate embodiment of a utility vehicle according to the present invention including an apparatus for lifting and carrying cable or other types of coiled product.

FIG. **8** is a side view of an alternative embodiment of a utility vehicle according to the present invention including a fork/pallet type lifting apparatus suitable for lifting, carrying and unloading materials, typically those types of materials stored on a conventional pallet.

FIG. **9** is a side view of an alternate embodiment of the utility vehicle according to the present invention including a foot assembly and fork assembly.

DETAILED DESCRIPTION OF THE INVENTION

Turning now to FIG. **1**, a utility vehicle **20** is shown, according to one embodiment of the present invention. The utility vehicle **20** includes a vehicle frame, seen generally at **22**. A power source **24**, typically an internal combustion engine or an electric motor, is secured to the vehicle frame **22** near the rear end **26** of the vehicle frame **22**. A propulsion system, seen generally at **28**, is attached to the vehicle frame **22** and operates, upon receiving power through a drivetrain (not shown), to propel the utility vehicle **20**.

A platform or bed **30** is attached to the upper surface of the vehicle frame **22**. The bed or platform **30** forms a load-carrying surface of the utility vehicle **20**. A first barrier member or wall **32** extends upwardly from the platform or bed **30** and forms a load-containing surface located adjacent the power source **24**. As shown in FIG. **1**, the platform or bed **30** may include a small upwardly extending raised portion or stop **34** located at the front end **36** of the utility vehicle **20** that helps to contain or hold a load on the utility vehicle **20** during operation.

A second barrier member or wall **38** is positioned near the rear end **26** of the utility vehicle **20** and provides both a

protective barrier for the power source **24** and a mounting surface or frame member that supports a control mechanism, seen generally at **40**, needed to operate the utility vehicle **20**. Depending upon the various types of propulsion systems **28** used the control mechanism **40** for operating the drive or propulsion systems **28** may vary.

FIG. **1** illustrates one type of propulsion system **28** for use with the utility vehicle **20** according to one embodiment of the present invention. The propulsion system **28** includes a track-type drive arrangement having at least one drive wheel or sprocket **42**, a tension or take up wheel or sprocket **44** and a plurality of either support wheels or sprockets **46**. An endless belt or track **48** is positioned over the drive wheel or sprocket **42** and the tension or take up wheel or sprocket **44** in a known manner. Such track-type drive arrangements typically include a second track assembly positioned on the opposite side of the utility vehicle **20**. Each track **48** is capable of being driven independent of the other in a known manner in order to steer the utility vehicle **20**. In one embodiment of such a track-type drive arrangement, independent or separate hydraulic motors (not shown) are attached to and drive each track **48**. The hydraulic motor receives hydraulic pressure from a pump attached to the power source **24**. Each hydraulic motor is used to drive or rotate the drive wheel or sprocket **42** of the track assembly. A set of control handles or levers **50** are part of the control mechanism **40**. Each handle or lever **50** connects to and provides input to the hydraulic motor to control the speed and direction of the motors and correspondingly each track **48**.

It is contemplated that the utility vehicle **20** be operated in the various modes, including: a walk behind mode in which the operator walks behind the utility vehicle **20** and manipulates the control handles **50** of the control mechanism **40** to drive and steer the utility vehicle **20**; and a remote mode where the utility vehicle **20** is operated remotely using a separate remote unit **52** directly connected to the utility vehicle **20** using a cable **54** extending from the remote unit **52** to the control mechanism **40** of the utility vehicle **20** (see FIG. **5**), or by using via RF or IF signals sent from a remote unit **56** to the control mechanism **40** of the utility vehicle **20**, (see FIG. **4**). Other remote operation methods may also be used.

As shown in FIGS. **4-5**, the track-type drive system may be replaced with or by wheels **58**. The wheels **58** being of a size and design that minimizes any damage to the ground or other surface upon which the utility vehicle **20** is operated. Further while shown in FIG. **4** with three wheels **58** on each side of the utility vehicle **20**, as shown in FIG. **5**, a lesser number of wheels **58** can also be used. In addition, a greater number of wheels **58** may also be used to distribute the load or weight of the utility vehicle **20** over a wide footprint and thus reduce potential damage to the ground surface. Again, known drivetrains and drive systems can be used to steer and propel the utility vehicle **20**.

The size or overall construction of the utility vehicle **20** is such that it can be driven and maneuvered in areas unsuitable for larger vehicles. For instance, in and on the front and back yards of homes, around bushes, trees and other landscaping. It is of a size and width suitable to pass through a standard size fence gate, which is typically **36** inches wide. It should be understood that depending upon the terrain upon which it is operated, it may be desirable to use soft, balloon type lawn tires, like those commonly used on many mowing machines or lawn tractors to reduce any damage to lawns or landscaping. Accordingly, such a utility vehicle **20** may be driven onto a lawn, used to pick up and haul away brush, debris, tree limbs from tree trimming operations, or other landscaping uses, all of which are typically labor intensive operations.

FIGS. **1-3** illustrate a loading apparatus or system, seen generally at **60**, for use with the utility vehicle **20**. The loading apparatus **60** includes a foot assembly **62** and in some instance may include a fork assembly **64**. The foot assembly **62** includes first and second foot members **66**, **68**. Each foot members **66**, **68** having a base portion or ground engaging member **70** and a leg portion **72**. Each of the first and second foot members **66**, **68** are pivotally secured, through pivot pins or stub shafts **74** on opposite sides of the front end **36** of the vehicle frame **22**. It should be understood that the loading apparatus or assembly **60** is removably attached to the utility vehicle **20**. Thus, depending on the particular use of the utility vehicle **20**, the loading apparatus or assembly **60** can be removed from the utility vehicle. In addition, various components of the loading apparatus **60** may also be removed, for instance, the fork assembly **64** may be removed while the foot assembly **62** is left on the utility vehicle **20** to provide support during loading, unloading or moving of the platform or bed **30**.

Power cylinders, such as hydraulic cylinders **76**, are pivotally attached on one end thereof, via a pivot pin **78**, to the leg portions **72** and on the opposite end thereof, via a pivot pin **80**, to the vehicle frame **22**. As used herein, power cylinders means any type of power source, including ball-screws, air cylinders or other actuation mechanisms used to generate movement between two or more components. The hydraulic cylinders **76** are used to lower and position the first and second foot members **66**, **68** such that the respective base portions **70** engage and provide a base or support on the ground surface. The first and second foot members **66**, **68** are shown herein as independently driven. This allows for the foot assembly **62** to compensate for uneven ground surfaces. It is, however, within the scope of the invention to provide a crossbar or other type of connecting member between the first and second foot members **66**, **68** and use a single power source such as a hydraulic cylinder to move the respective base portions **70** of the foot assembly **62** in unison. Irrespective of the drive assembly used, the foot assembly **62** is connected to the utility vehicle **24** for movement between a transport position, i.e., a raised position and a working position, i.e., a lowered position wherein the base portions **70** of the foot members **66**, **68** contact the ground surface.

The fork assembly **64** includes first and second fork members **82**, **84**. The first and second fork members **82**, **84** each include a load engaging or lifting portion **86** and a leg portion **88**. The respective leg portions **88** include a rearwardly extending arm portion **90**. The end of the arm portion **90** receives a pivot pin **92** and is correspondingly pivotally secured to the upper end of the leg portion **72** of the first and second foot members **66**, **68**. Accordingly, the first and second fork members **82**, **84** pivot with respect to the first and second foot members **66**, **68**. In the preferred embodiment, the arm portions **90** of each of the first and second fork members **82**, **84**, have a degree of curvature or an arcuate shape. The arm portions **90** may also be substantially straight. Cross members **94** extend between the respective first and second fork members **66**, **68**. The cross members **94** tie the respective first and second fork members **82**, **84** together such that they move in unison. It is also contemplated that the cross members **94** may be removed whereby first and second fork members **82**, **84** may move independently of one another.

To pivot the first and second fork members **82**, **84** about the pivot pin **92** suitable power sources, such as hydraulic cylinders **96**, are pivotally attached on one end, via a pivot pin **98** to first and second foot members **66**, **68** and at the opposite end, via a pivot pin **100**, to the first and second fork members **82**, **84**. As shown, the pivot pin **100** used to connect the

hydraulic cylinders **96** to the first and second fork members **82**, **84** is located at the intersection between the leg portion **88** and the arm portion **90**. The arm portion **90** functions as a moment arm in relation to the distance between the pivot pin **100** and the pivot pin **92** used to secure the first and second fork members **82**, **84** to the respective first and second foot members **66**, **68**.

As indicated, the fork assembly **64** is independent of the foot assembly **62**. It should be understood, however, that securing one end of the hydraulic cylinders **96** used to move the fork assembly **64** to the foot assembly **62** transfers a load placed on the first and second fork members **82**, **84** to the base portions **70** of the first and second foot members **66**, **68**, rather than the vehicle frame **22**. While shown in the preferred embodiment with a set length, the base portion **70** of the foot members **66**, **68** can be extended in length to provide additional support. Also, the base portion **70** may include a wide surface or pad that engages the ground surface. In addition, rather than providing each foot member **66**, **68** with a base portion **70**, the base portion could be a single slab having a ground engaging surface extending between the foot members **66**, **68**. In addition, while shown as a one-piece member, the foot members **66** may be formed in two or more pieces wherein the base member **70** folds up against the leg member **72** when not in use, and locks in the position shown during use. In this way, the utility vehicle **20** can lift a load greater than the overall weight of the utility vehicle **20**, as the load is being lifted against or transferred to the base portions **70** which are placed on the ground during a lift and load operation.

As shown in FIG. **1**, the base portions **70** of the first and second foot members **66**, **68** remain on the ground surface while the hydraulic cylinders **96** operate to swing or rotate the first and second fork members **82**, **84** about the pivot pins or stub shafts **92** in the arc shown by arcuate line **102**. The lifting portion **86** of the first and second fork members **82**, **84** may include a raised or convex surface **104** that functions to keep workpieces loaded on the lifting portion **86**. In addition, the leading edge or surface **106** of the leg portion **88** may also have a degree of curvature to facilitate transfer of a workpiece from the first and second fork members **82**, **84** to the utility vehicle **20**. Accordingly, the first and second fork members **84**, **86** function to correspondingly lift and deposit a workpiece on the platform or bed **30** of the utility vehicle **20**.

During transport, the loading apparatus **60** is raised, i.e., the foot assembly **62** and correspondingly the fork assembly **64** is lifted by the hydraulic cylinders **76** such that the respective base portions **70** of the first and second foot members **66**, **68** are lifted up off of the ground surface whereby the utility vehicle **20** may be driven to a particular location. When the utility vehicle **20** reaches its intended location, the loading apparatus **60** is lowered until the base portions **70** of the first and second foot members **66**, **68** contact the ground surface. The first and second fork members **82**, **84** are then loaded with workpieces, after which they are raised to deposit the workpieces on the bed **30** of the utility vehicle **20**. As used herein, workpiece is broadly considered to encompass any article that can be lifted, carried or transported by the utility vehicle **20**.

It should be understood that the loading apparatus **60** of may be operated by suitable controls situated on the control mechanism **40** located on the utility vehicle **20** or remotely by a hand-held unit **52**, **56** using suitable transmission technology for relaying an operation signal from the hand-held unit **52**, **56** to the control mechanism **40** located on the utility vehicle **20**. In addition, the utility vehicle **20** may be driven much like a forklift truck, specifically, it may be driven or operated in any manner that places the loading apparatus **60** underneath a workpiece which is then lifted by the first and second fork members **82**, **84** onto the platform or bed **30** of the utility vehicle **20**.

Turning now to FIG. **4**, a utility vehicle **20** is shown according to the present invention, including a liftable platform or bed **110** and a loading apparatus **60**. As shown, a plurality of parallel link bars **112** are pivotally attached on one end thereof, via pivot pins **114**, to the vehicle frame **22**. The parallel link bars **112** are pivotally attached on the opposite end thereof, and via pivot pins **116**, to the platform or bed **110** is attached to the vehicle frame **22** of parallel link bars **112**. A plurality of power sources, such as hydraulic cylinders **118**, are attached to and operative to drive the platform or bed **110** upward while it is supported on the link bars **118**. Other types of power sources, including ball-screws, air cylinders or other actuation mechanisms may be used to raise the platform or bed **110** upwardly from the vehicle frame **22**.

The parallel link bars **112**, in addition to raising the platform or bed **110**, also cause the platform or bed **110** to move in a rearward direction with respect to the vehicle frame **22**, whereby the front end **128** of the platform or bed **110** extends outward past the front end **36** of the vehicle frame **22** in the direction shown by the arrow **126**. This provides an added advantage when removing workpieces from the utility vehicle **20** in that there is a greater amount of room at the forward end **36** of the utility vehicle **20** to dump or deposit workpieces carried by the utility vehicle **20**. In addition, such an arrangement allows the utility vehicle **20** to be positioned adjacent a cart, wagon or dumpster or some other container, whereby workpieces located on the bed or platform **110** may be raised to a height above and then transferred to the container.

In addition, such an arrangement enables the utility vehicle **20** to be placed adjacent a truck or other type of vehicle having a dump box or platform at a position or level higher than the initial or load carrying position of the platform or bed **110** of the utility vehicle **20** whereby the workpieces may be loaded onto the truck for removal and/or disposal. As shown, the loading apparatus **60** engages the ground surface to provide additional support at the front end **36** of the utility vehicle **20** during the dumping operation.

In addition, the platform or bed **110** may include a dump portion **120** which is pivotally attached, via a pivot pin **122** at one end thereof to the platform or bed **110**. A second power source, typically a hydraulic cylinder **124**, is operative to lift or raise the dump portion **120** of the platform or bed **110** to dump or empty workpieces from the platform or bed **110**.

In a further embodiment, the dump portion **120** of the platform or bed **110** is pivotally attached to the front end **36** of the utility vehicle **20** without the need for the plurality of parallel link bars **112**. In such an instance, the hydraulic cylinder **124** operates to pivot the platform or bed **110**. While shown in FIG. **4** including an entire loading apparatus **60**, the utility vehicle may simply include only the foot assembly **62** of the loading apparatus **60**, which as set forth above, provides support at the front end **36** of the utility vehicle **20** during the lifting and dumping operation of the utility vehicle **20**.

As discussed earlier, FIG. **4** shows the utility vehicle **20** with wheels **58** rather than the track type drive system as shown in FIG. **1**. This type of drive arrangement may use lawn or turf type tires that typically cause less damage to the ground surface. Additionally, the number or sets of wheels **58** may vary depending upon the type of surface upon which the utility vehicle **20** is to be operated. FIG. **5** illustrates the utility vehicle **20** with two wheels **58** on each side of the utility vehicle **20** for a total of four wheels, two on each side. The wheels **58** may be independently mounted to the vehicle

frame **22** or may be mounted in pairs on respective axles. The propulsion system **28** associated with the wheels **58** may drive all or one of the wheels **58** depending upon the particular needs of the utility vehicle **20**. In some cases, it may be advantageous to make the utility vehicle **20** an all-wheel drive vehicle. Power transmission systems capable of such a drivetrain are known in the art.

FIG. **5** illustrates a further embodiment of the utility vehicle **20** including a pivotable platform or bed **130** having a dump box **132** secured thereto. The dump box **132** includes a pivotable gate **134**, which opens when the dump box **132** is raised to allow workpieces or other material to exit the dump box **132**. As shown in FIG. **5**, the dump box **132** can be raised about its pivot axis by a suitable power source such as a hydraulic cylinder **136**. The utility vehicle **20** may include the entire loading apparatus **60** or may simply include only the foot assembly **62** of the loading apparatus **60**, which as set forth above, provides support at the front end **36** of the utility vehicle **20** during the lifting and dumping operation of the utility vehicle **20**. As shown in FIG. **5**, the hydraulic cylinder **76** that drives the foot member **66** is attached at one end, via a pivot point **138**, to the first end **36** of the utility vehicle **20**. The hydraulic cylinder **76** is attached at the other end to the base portion **70** of the foot member **66**. This is an alternative arrangement for mounting the foot member **66**.

Turning to FIG. **6**, a utility vehicle **20** according to a further embodiment is illustrated having a track-type drive or propulsion system similar to that shown in FIG. **1**. The utility vehicle **20**, having a grapple or claw-type loading apparatus **140** for grasping, lifting, moving and loading a workpiece from one position to another. The grapple assembly **140** includes a rotatable base portion **142** secured to the platform or bed **30** of the utility vehicle **20**. An arm member **144** is pivotally connected to the base portion **142** by a pivot pin **146**. A hydraulic cylinder **148** is connected between the base portion **142** and the arm member **144** and is operative to pivot the arm member **144** about the pivot pin **146**. The arm member **144** may include a telescopic portion whereby it extends in length. Claw-type fingers of **150** are pivotally attached to a support member **152**. Hydraulic cylinders **156** are attached on one end to the support member **152** and on their respective opposite ends to the claw-type fingers **150**. Actuation of the cylinders **156** causes the claw-type fingers **150** to open and close to grasp a workpiece. The support member **152** is pivotally attached to the end **154** of the arm **144** via a pivot pin **158**.

As with the previous embodiments, The utility vehicle **20** may include the entire loading apparatus **60** or may simply include only the foot assembly **62** of the loading apparatus **60**, which as set forth above, provides support at the front end **36** of the utility vehicle **20** during operation of the grapple or claw-type loading apparatus **140**.

FIG. **7** illustrates a utility vehicle **20** having a track-type drive system similar to that shown in FIG. **1** including a reel loader assembly **160** of the type used to lift and transport reels **162**, typically containing a recoilable product such as cable, hose, or wire. The reel loader assembly **160** includes at least one arm member **164** pivotally attached to the vehicle frame **22**, and may include a pair of arm members. The arm **164** pivots or moves about the pivot point **166** due to operation of a hydraulic cylinder **168**. A reel support member **170** is slidably mounted within a groove or slot **172** located in the arm member **164**. A power source, such as a hydraulic cylinder **174**, is connected to the reel support member **170** and is operative to move the reel support member **170** longitudinally in the direction shown by the arrow **176** to accommodate different size reels **162**. It should be understood that smaller reels **162** may then be lifted and supported on the utility vehicle **20** while keeping their center axis as close as possible to the pivot point **166** of the arm member **164** to reduce the necessary lifting force and moment.

With the present embodiment, the utility vehicle **20** typically includes only the foot assembly **62** of the loading apparatus **60**, which provides support at the front end **36** of the utility vehicle **20** during loading of the reel **162**. Thus, the cylinder **76** is used to raise and lower the foot assembly **62**. FIG. **8** illustrates the same mounting arrangement of the hydraulic cylinder **76** that repositions the foot member **66**, as shown in FIG. **1**.

FIG. **8** illustrates a utility vehicle **20** having a track-type drive or propulsion system similar to that shown in FIG. **1**, having a fork lift/carrier **180** secured to the frame **22** of the utility vehicle **20**. The utility vehicle **20** further includes a foot assembly **62** that engages the ground surface to support the load during operation of the fork lift/carrier assembly **180**. As with the foot assemblies **62** shown in FIG. **5-6**, the foot assembly **62** differs slightly from the previous embodiments in that the hydraulic cylinder **76** is mounted to the front end **36** of the frame **22** in front of the pivot pin **74** about which the foot member **66** pivots.

An arm member **182** of the fork lift/carrier assembly **180** is pivotally attached to the frame **22** by a pivot pin **186**. A hydraulic cylinder **184** operates to move or pivot the arm member **182** toward the front end **36** of the utility vehicle **22**. A plurality of link members **188** and hydraulic cylinders **190** operate to position the fork member **192** and enable it to be lowered to the ground surface and to lift and carry a workpiece, typically a pallet having a load attached thereto. Thus, the fork lift/carrier **180** lifts a pallet from the ground surface onto the utility vehicle **20** where it can be transported to a new location. Further, such assembly can be used to lift and carry pallets from a truck or trailer to a remote or difficult to access location.

FIG. **9** illustrates an alternate embodiment of a utility vehicle **20** according to the present invention. The utility vehicle **20** utilizes a track-type drive unit or propulsion system **28** similar to that shown in FIG. **1**. It may also utilize a plurality of tires or wheels as shown in FIG. **4-5**, depending upon the drive arrangement desired. As shown in FIG. **9**, the utility vehicle **20** includes a further embodiment of a foot assembly **200** including a foot member or pad **202** pivotally attached, via a pivot pin **204**, to a link member **206**. The link member **206** is pivotally connected, via a pivot pin **208**, to the frame **22** of the utility vehicle **20**. A hydraulic cylinder **210** is connected both to the foot member **202** at pivot pin **204** and the frame member **22** via a pivot pin **212**. The hydraulic cylinder **210** or other power source is operative to lower the foot member **202** until it contacts the ground surface whereby it provides support for the vehicle frame **22**. In the disclosed embodiment, the foot member **202**, corresponding hydraulic cylinder **210** and link member **206** are mounted to the vehicle frame **22** between the tracks **34** of the track-type drive or propulsion system **28**. Accordingly, the foot assembly **200** provides support for the utility vehicle **20** during use of the vehicle, particularly when the utility vehicle **20** includes many of the implements set forth previously. Thus, at least a portion of the utility vehicle **20** is supported by the foot member **202** rather than the components of the drive system or propulsion unit **28**. It should be understood that the length of the link member **206** can be extended such that the foot member **202** is disposed adjacent or past the front end **36** of the vehicle **20**.

FIG. **9** also discloses a further embodiment of a utility vehicle **20** according to the present invention including a

loading apparatus or system, seen generally at **214**. The loading apparatus or system **214** includes a fork assembly **216**. The loading apparatus **214** can be used in connection with the foot assembly **200**. The fork assembly **216** includes at least one fork member **218** pivotally attached, via a pivot pin **220**, to the vehicle frame **22** and a hydraulic cylinder **222**. The hydraulic cylinder **222** is pivotally attached on one end thereof, via a pivot pin **224**, to the leg portion **226** of the fork member **218**. The other end thereof connected to the vehicle frame **22** whereby actuation of the hydraulic cylinder **222** raises and lowers the fork assembly **216**.

Accordingly, at least some of the weight or loading force; i.e., the force generated when a load placed on the fork member **218** is lifted from the ground surface onto the utility vehicle **20**, is borne by transferred to the foot member **202**. As set forth previously, this arrangement enables a workpiece to be lifted by the fork assembly **216** onto the utility vehicle **20**, whereby at least a portion of the weight thereof is borne by the foot member **202** and correspondingly the ground surface.

It should be understood that part of the invention is the use of a loading apparatus **60** having a foot assembly **62** and a fork assembly **64** wherein at least a portion of the weight or load distribution is borne by the foot assembly **62** rather than the utility vehicle **20** when the fork assembly **64** is used to lift and deposit a load on the utility vehicle **20**. Further, at least a portion of the weight or load is also borne by the foot assembly and correspondingly the ground surface when using other implements, including a dump box or raisable bed as disclosed in the previous embodiments. Such an arrangement enables the utility vehicle **20** to be of a light weight and easily maneuverable construction and versatile in that it is suitable to support a variety of implements.

The present invention discloses the use of hydraulics, including hydraulic motors as a power source. Other power sources such as ball screws, screw jacks and similar power sources may be used to move and reposition the various components, including the loading apparatus **60** of the utility vehicle **20**.

The description of the invention is merely exemplary in nature and, thus, variations that do not depart from the gist of the invention are intended to be within the scope of the invention. Such variations are not to be regarded as a departure from the spirit and scope of the invention

What is claimed is:

1. A utility vehicle comprising:

a vehicle frame, including a bed;

a propulsion system, said propulsion system attached to said vehicle frame for moving said vehicle frame in response to an input from a control mechanism;

a loading apparatus, said loading apparatus mounted on said vehicle frame, said loading apparatus including a foot assembly and a fork assembly, said foot assembly movable to a working position wherein a portion of said foot assembly contacts the ground;

said fork assembly operative to move between a first, lowered position and a second, raised position when said foot assembly is in said working position wherein as said fork assembly moves between said first, lowered position and said second, raised position, said fork assembly lifts a workpiece located on said fork assembly and deposits the workpiece on the bed;

said fork assembly includes a fork member including a lifting portion, a leg portion, and an arm portion;

said foot assembly includes a foot member, said foot member including a base portion and a leg portion, said leg portion connected to said vehicle frame;

said arm portion connected to said foot assembly; and

a power cylinder connected at one end thereof directly to said fork member and on an opposite end thereof directly to said foot assembly whereby said fork member moves separately from said foot assembly.

2. A utility vehicle as set forth in claim **1** wherein said fork assembly is pivotally attached to said foot assembly and moves independently of said foot assembly.

3. A utility vehicle as set forth in claim **1** wherein said utility vehicle has front and rear ends, said loading apparatus mounted adjacent to said front end and a motor forming a part of said propulsion system, said motor mounted to said vehicle frame near said rear end.

4. A utility vehicle as set forth in claim **1** wherein said propulsion system includes a drive wheel rotatably supported on said vehicle frame, a take up wheel rotatably supported on said vehicle frame and an endless belt disposed over said drive wheel and said take up wheel whereby rotation of said drive wheel causes movement of said endless belt to propel the utility vehicle.

5. A utility vehicle comprising:

a vehicle frame, including a bed;

a propulsion system, said propulsion system attached to said vehicle frame for moving said vehicle frame in response to an input from a control mechanism;

a loading apparatus, said loading apparatus mounted on said vehicle frame, said loading apparatus including a foot assembly and a fork assembly, said foot assembly movable to a working position wherein a portion of said foot assembly contacts the ground;

said fork assembly operative to move between a first, lowered position and a second, raised position when said foot assembly is in said working position wherein as said fork assembly moves between said first, lowered position and said second, raised position, said fork assembly lifts a workpiece located on said fork assembly and deposits the workpiece on the bed;

said fork assembly includes first and second fork members, each of said fork members attached to said foot assembly;

a cross member extending between said first and second fork members and connecting said first and second fork members to one another; and

a power cylinder, said power cylinder directly engaging and directly extending between said foot assembly and said fork assembly, said power cylinder operative to move said fork assembly independent of said foot assembly.

6. A utility vehicle comprising:

a vehicle frame, said vehicle frame having a front end and a rear end;

a platform formed on an upper surface of said vehicle frame;

a power source located on said vehicle frame near said rear end;

a propulsion system attached to said vehicle frame for moving said vehicle frame in response to an input from a control mechanism, said propulsion system connected to and receiving power from said power source;

a loading apparatus, said loading apparatus including a foot assembly and a fork assembly, said foot assembly connected to said vehicle frame and including first and second foot members, each of said foot members including a base portion and a leg portion, said fork assembly including first and second fork members each of said fork members including a lifting portion, a leg portion and an arm portion, said fork assembly mounted to said foot assembly for movement independent of said foot

assembly wherein in at least one position said lifting portion of said fork assembly is positioned adjacent said base portion of said foot assembly; and

a power cylinder connected directly between said fork assembly and said foot assembly, said power cylinder operative to move said fork assembly independent of said foot assembly.

7. A utility vehicle as set forth in claim **6** wherein said control mechanism includes a remote unit, said remote unit receiving input from an operator and transferring said input to said control mechanism for controlling said propulsion system, foot assembly and fork assembly.

8. A utility vehicle as set forth in claim **6** wherein said propulsion system includes a drive wheel, a take up wheel, and an endless belt disposed about said drive wheel and said take up wheel.

9. A utility vehicle as set forth in claim **6** wherein said propulsion system includes a plurality of wheels mounted to said vehicle frame, said wheels receiving a driving input from said power source.

10. A utility vehicle as set forth in claim **6** including a mechanism for raising said platform upwards, off of said vehicle frame, said mechanism further moving said platform rearward such that it extends past said rear end of said vehicle frame.

11. A utility vehicle as set forth in claim **10** wherein said mechanism for raising said platform and moving said platform rearward includes a plurality of parallel link bars connected on one end thereof to said vehicle frame and on an opposite end thereof to said platform; and

a power cylinder connected to said vehicle frame and said platform, said power cylinder operative to raise said platform on said plurality of parallel link bars.

12. A utility vehicle comprising:

a vehicle frame, said vehicle frame having a front end and a rear end;

a platform located on an upper surface of said vehicle frame;

a power source located on said vehicle frame near said rear end;

a propulsion system attached to said vehicle frame for moving said vehicle in response to an input from a control mechanism, said propulsion system connected to and receiving power from said power source;

a foot assembly, said foot assembly connected to said vehicle frame and including first and second foot members, each of said foot members including a base portion and a leg portion;

a power cylinder directly connected to and extending between said foot assembly and said vehicle frame, said power cylinder operative to move said foot assembly between a raised position and a lowered position wherein said base portion contacts the ground surface; and

an implement supported on said platform.

13. A utility vehicle as set forth in claim **12** including said foot assembly mounted at a mounting point to said vehicle frame near said front end of said vehicle frame, said power cylinder operative to move said foot assembly connected between a foot member of said foot assembly and said vehicle frame at a location between the mounting point of said foot member and said front end of said vehicle.

14. A utility vehicle as set forth in claim **12** including said foot assembly mounted at a mounting point to said vehicle frame near said front end of said vehicle frame, said power cylinder operative to move said foot assembly connected between a foot member of said foot assembly and said vehicle frame at a location between the mounting point of said foot member and said rear end of said vehicle.

15. A utility vehicle as set forth in claim **12** wherein said implement includes a dump box pivotally attached to said platform; and

a power cylinder connected between said vehicle frame and said dump box to raise said dump box.

16. A utility vehicle as set forth in claim **12** to wherein said implement includes a claw-type loading apparatus having a base portion rotatably mounted on said platform;

an arm pivotally connected to said base portion and extending outwardly therefrom;

a power cylinder extending between said base portion and said arm portion, said power cylinder operative to move said arm portion;

a pair of fingers, said fingers to pivotally attached to a support member, said support member secured to said arm portion; and

a pair of power cylinders connected to said support member and said fingers, said power cylinders are operative to move said fingers whereby said fingers may grasp a workpiece.

17. A utility vehicle as set forth in claim **12** to wherein said implement includes a reel loader assembly, said reel loader assembly including an arm member pivotally attached to said vehicle frame, said arm member having an elongated opening located therein;

a reel support member connected to said arm member for movement within said elongated opening; and

foot assembly pivotally mounted to said vehicle frame adjacent said front end of said vehicle frame, said power cylinder operative to move said foot assembly connected to a foot member of said foot assembly and to said vehicle frame between the mounting point of said foot member and said rear end of said vehicle.

18. A utility vehicle as set forth in claim **12** to wherein said implement includes a fork lift assembly, including an arm member pivotally attached to said vehicle frame;

a power cylinder connected to said arm member and said vehicle frame, said power cylinder operative to move said arm member;

a fork member connected to said arm member by at least one link member and pivot pin combination.

* * * * *