US009321386C1

(12) **EX PARTE REEXAMINATION CERTIFICATE** (11288th)

United States Patent

Thomas et al.

(10) **Number: US 9,321,386 C1**

(45) **Certificate Issued: Apr. 12, 2018**

(54) **LOW PROFILE COMPACT TOOL CARRIERS**

(71) Applicant: **Vermeer Manufacturing Company**, Pella, IA (US)

(72) Inventors: **Brad Thomas**, Pleasant Hill, IA (US); **Louis Hartke**, Pella, IA (US); **Greg Langenfeld**, Bettendorf, IA (US); **Matt Hutchinson**, Pella, IA (US)

(73) Assignee: **VERMEER MANUFACTURING COMPANY**, Pella, IA (US)

Reexamination Request:
No. 90/013,915, Feb. 28, 2017

Reexamination Certificate for:

Patent No.:	**9,321,386**
Issued:	**Apr. 26, 2016**
Appl. No.:	**14/691,649**
Filed:	**Apr. 21, 2015**

Related U.S. Application Data

(60) Provisional application No. 62/118,860, filed on Feb. 20, 2015.

(51) **Int. Cl.**

B60P 1/50	(2006.01)
B66F 9/075	(2006.01)
B66F 9/22	(2006.01)
B66F 9/06	(2006.01)
E02F 3/34	(2006.01)
E02F 9/08	(2006.01)
E02F 3/96	(2006.01)
E02F 9/20	(2006.01)
B60P 1/48	(2006.01)
B66F 9/065	(2006.01)

(52) **U.S. Cl.**

CPC ***B66F 9/06*** (2013.01); ***B60P 1/483*** (2013.01); ***B66F 9/065*** (2013.01); ***B66F 9/0759*** (2013.01); ***B66F 9/07572*** (2013.01); ***B66F 9/07577*** (2013.01); ***B66F 9/22*** (2013.01); ***E02F 3/3405*** (2013.01); ***E02F 3/3414*** (2013.01); ***E02F 3/96*** (2013.01); ***E02F 9/08*** (2013.01); ***E02F 9/205*** (2013.01)

(58) **Field of Classification Search**

None

See application file for complete search history.

(56) **References Cited**

To view the complete listing of prior art documents cited during the proceeding for Reexamination Control Number 90/013,915, please refer to the USPTO's public Patent Application Information Retrieval (PAIR) system under the Display References tab.

Primary Examiner — William Doerrler

(57) **ABSTRACT**

Compact tool carriers having a loader mounted to a low-profile mainframe are disclosed. In some embodiments, the pivot points of the mainframe about which the loader is pivoted are low relative to the mainframe to reduce the mainframe size and to lower the center of gravity to improve the stability of the compact tool carrier during use.

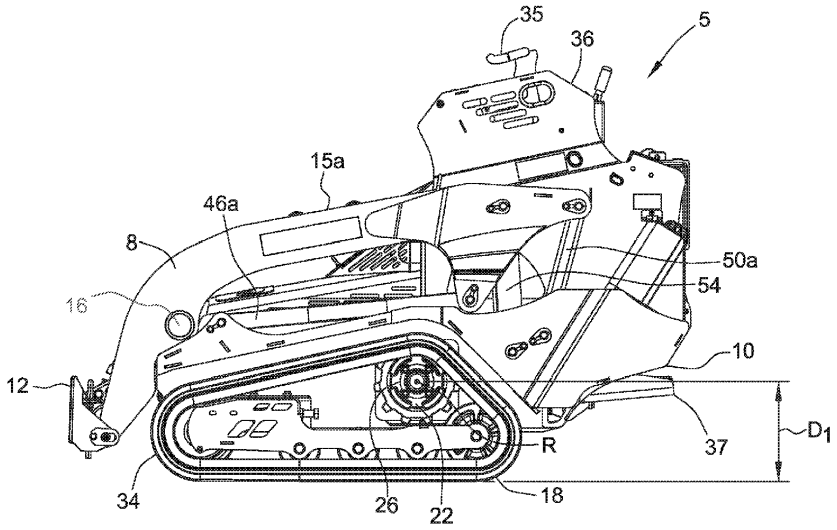

(AMENDED)

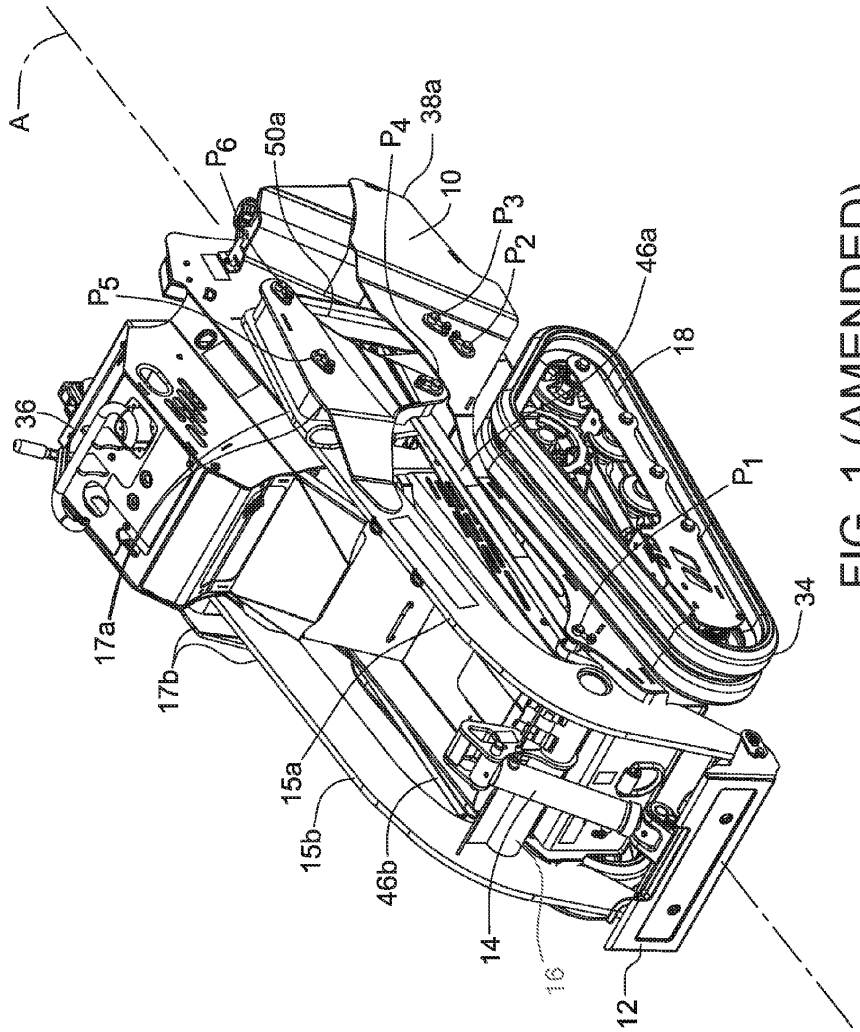

FIG. 1 (AMENDED)

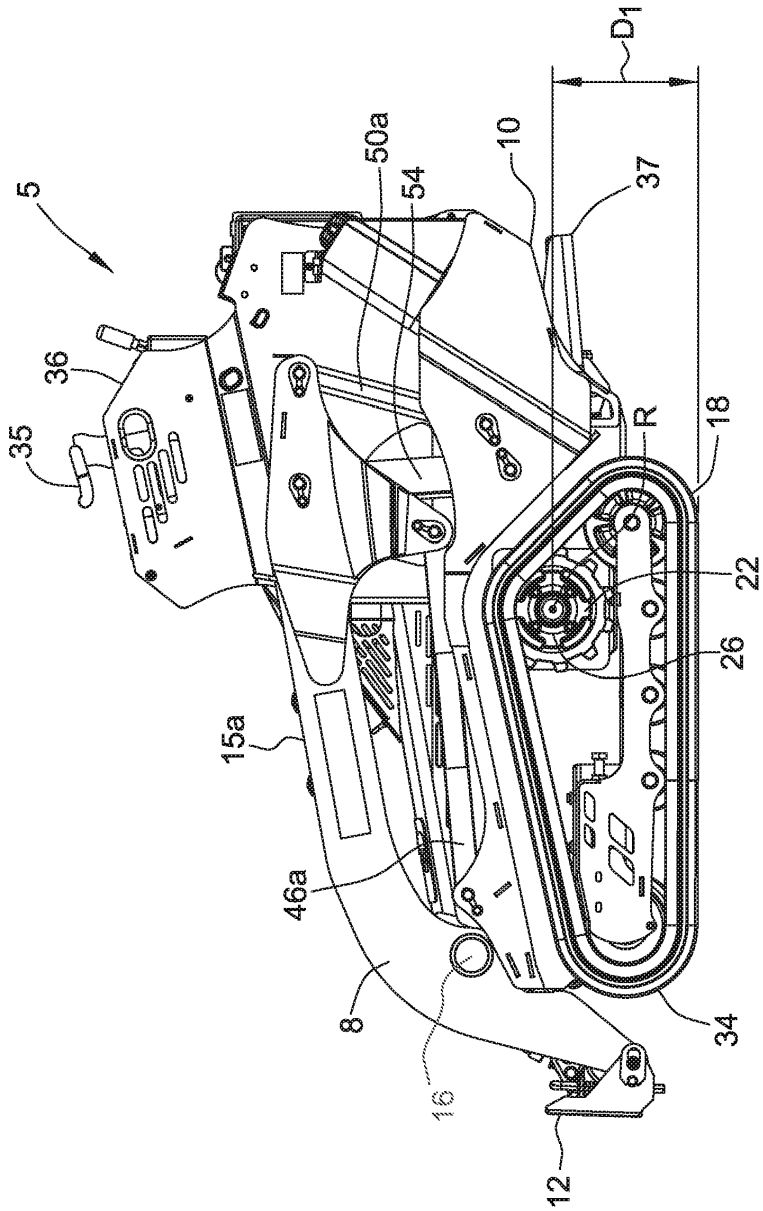

FIG. 2 (AMENDED)

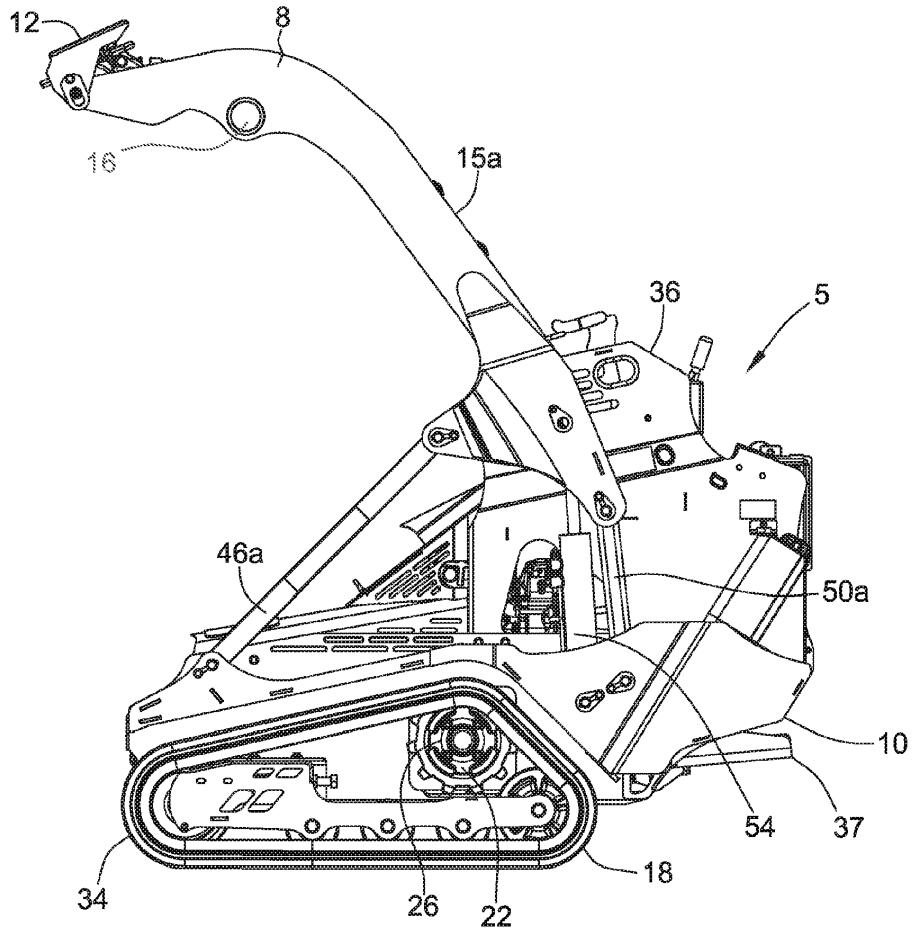

FIG. 3 (AMENDED)

EX PARTE REEXAMINATION CERTIFICATE

THE PATENT IS HEREBY AMENDED AS INDICATED BELOW.

Matter enclosed in heavy brackets [ ] appeared in the patent, but has been deleted and is no longer a part of the patent; matter printed in italics indicates additions made to the patent.

ONLY THOSE PARAGRAPHS OF THE SPECIFICATION AFFECTED BY AMENDMENT ARE PRINTED HEREIN.

Column 2, lines 44-58:

An embodiment of a compact tool carrier is generally referred as "**5**" in FIG. **1**. The compact tool carrier **5** includes a loader **8** supported by a mainframe **10**. The loader **8** includes an attachment plate **12** for interchangeably attaching any one of a number of tools (not shown). In this regard, such interchangeable tools do not form part of the compact tool carrier **5** unless stated otherwise. The attachment plate **12** is connected to an actuator **14** for tilting of tools connected to the attachment plate **12**. The loader **8** has a first arm **15***a* and a second arm **15***b* generally opposite the first arm **15***a*. *A cross-member 16 extends from the first arm 15a to the second arm 15b. The actuator 14 is connected to the cross-member 16.* Each arm **15***a*, **15***b* may be a single weldment or may include various components attached by fasteners (e.g., nuts and bolts). The first and second arms **15***a*, **15***b* each include a bracket portion **17***a*, **17***b* (FIG. **1**) for fastening various linkages.

Column 3, lines 20-30:

The compact tool carrier **5** includes a drive mechanism **18** attached to the mainframe **10**. In the illustrated embodiment, the drive mechanism **18** is directly mounted (i.e., connected without intermediary parts) to the mainframe **10** by way of drive sprocket **22** connected to a hub **26** (FIG. **2**). The hub **26** is attached to a shaft (not shown) that extends through a drive opening **30** (FIG. **4**) of the mainframe **10**. The sprocket **22**, hub **26** and shaft (not shown) rotate about a rotational axis R (FIG. **5**). As shown, the drive mechanism **18** includes tracks **34**. In other embodiments, the drive mechanism **[10]** *18* includes wheels.

Column 4, lines 35-45:

An actuator **54**, shown as a hydraulic cylinder, is attached to the first side **38***a* of the mainframe **10** at its center pivot point **[**P_4**]** P_2 and is attached to the loader arm **15***a* at its center pivot point P_5 to raise the loader **8**. The compact tool carrier **5** may include a single actuator **54**, or, as in other embodiments, a second actuator (not shown) is connected to the second side **38***b* (FIG. **4**) of the mainframe **10** and the second arm **15***b* (FIG. **1**). The actuator **54** is powered to raise the loader **8** and, in some embodiments, is also powered to lower the loader **8** (as opposed to a one-way actuator lowered by gravity alone).

Column 5, lines 4-19:

In some embodiments, the mainframe **10** is characterized by a relatively low profile (i.e., the pivot points are positioned relatively low on the mainframe allowing its height to be reduced). The rotational axis R (FIG. **5**) and the bottom of the compact tool carrier **5** (FIG. **2**) are separated by a distance D**1**. Generally, the bottom of the compact tool carrier **5** corresponds to the point at which the drive mechanism **18** contacts the surface supporting the compact tool carrier **5**. The rotational axis R and the forward pivot point P_1 of the first side **38***a* of the mainframe **10** are separated by a vertical distance D**2**. The rotational axis R and the rear pivot point P_3 are separated by a vertical distance D**3**. The rotational axis R and the central pivot point **[**P_4**]** P_2 are separated by a vertical distance D**4**. Each of D**2**, D**3** and D**4** is less than about 1.5 times D**1** (1.5×D**1**). In some embodiments, each of D**2**, D**3** and D**4** is less than D**1** or even less than about 0.75 times D**1** (0.75×D**1**).

THE DRAWING FIGURES HAVE BEEN CHANGED AS FOLLOWS:

On FIGS. **1**, **2** and **3**, A reference numeral has been added (**16**) for the crossbar between the arms (**15**a and **15**b).

AS A RESULT OF REEXAMINATION, IT HAS BEEN DETERMINED THAT:

The patentability of claims **1** and **3-13** is confirmed.

Claims **16** and **18** are cancelled.

Claims **15**, **17** and **19** are determined to be patentable as amended.

Claim **20**, dependent on an amended claim, is determined to be patentable.

New claims **21-63** are added and determined to be patentable.

Claims **2** and **14** were not reexamined.

15. A compact tool carrier comprising:

a loader adapted to carry a tool;

a mainframe for supporting the loader, the mainframe having a first side and a second side, and having a front end and a rear end relative to the longitudinal axis, the mainframe comprising an engine bracket that extends from the first side toward the second side for mounting an engine to the mainframe, the engine bracket being spaced from the rear end of the mainframe, each side having a top and a bottom, the first side of the mainframe having at least two pivot points relative to the loader, the loader not being directly attached to the mainframe;

a linkage pivotally attached to the first side of the mainframe at a pivot point and pivotally attached to the loader;

an actuator pivotally attached to the first side of the mainframe at a pivot point and pivotally attached to the loader;

a drive mechanism comprising tracks or wheels for propelling the compact tool carrier over a supporting surface, the drive mechanism being attached to the mainframe about a rotational axis, the compact tool carrier having a bottom at which the drive mechanism contacts the supporting surface, the rotational axis and bottom of the compact tool carrier being separated by a vertical distance D**1**, *the rotational axis and the bottom of the first side of the mainframe being separated by a vertical distance D5,* the rotational axis and **[**each**]** *the* pivot point *at which the linkage is attached to the mainframe* being separated by a vertical distance *D2, the rotational axis and the pivot point at which the*

actuator is attached to the mainframe being separated by a vertical distance D4, **[**each vertical distance between the rotational axis and a pivot point**]** *D2 and D4 each* being less than 1.5 times D**1** *and each being less than twice D5*; and

a control station having operator controls for propelling the compact tool carrier forward and for raising and/or lowering the loader, the control station being mounted toward the rear of the compact tool carrier and adapted to allow for standing or walk-behind operation.

17. The compact tool carrier as set forth in claim **[16]** *15* wherein the second side of the mainframe comprises two pivot points, each vertical distance between the rotational axis and a pivot point being less than 1.5 times D**1**.

19. The compact tool carrier as set forth in claim **[18]** *15* wherein the first side of the mainframe comprises a top most pivot point, the top most pivot point and the top of the first side of the mainframe being separated by a vertical distance D**6**, D**6** being less than about 1.5 times D**5**.

21. The compact tool carrier as set forth in claim 1 wherein the linkage is a first linkage, the first linkage being pivotally attached to the first side of the mainframe at a first pivot point and pivotally attached to the loader arm at a second pivot point, the actuator being attached to the mainframe at a third pivot point and pivotally attached to the loader arm at a fourth pivot point, the compact tool carrier further comprising a second linkage pivotally attached to the first side of the mainframe at a fifth pivot point and pivotally attached to the loader arm at a sixth pivot point, wherein as the loader travels from a down position to a vertically raised position, the first, second, third, fourth, fifth, and sixth pivot points are (1) disposed between the operator controls and a bottom of the mainframe and/or (2) disposed forward of the control station.

22. The compact tool carrier as set forth in claim 21 further comprising an operator platform for standing operation of the operator controls of the control station, the operator platform being located toward a rear of the compact tool carrier such that the first pivot point, third pivot point, and fifth pivot point are disposed forward of the operator platform.

23. The compact tool carrier as set forth in claim 15 wherein D2 and D4 are each less than 1.75 D5.

24. The compact tool carrier as set forth in claim 15 wherein D2 and D4 are each less than 1.5 D5.

25. The compact tool carrier as set forth in claim 15 wherein D2 and D4 are each less than D1.

26. The compact tool carrier as set forth in claim 15 wherein D2 and D4 are each less than 0.75 D1.

27. The compact tool carrier as set forth in claim 15 wherein the linkage is a first linkage, the compact tool carrier further comprising a second linkage pivotally attached to the first side of the mainframe at a pivot point and pivotally attached to the loader, the rotational axis and the pivot point at which the second linkage is attached to the mainframe being separated by a vertical distance D3, D3 being less than 1.5 times D1.

28. The compact tool carrier as set forth in claim 15 wherein the linkage is a first linkage, the compact tool carrier further comprising a second linkage pivotally attached to the first side of the mainframe at a pivot point and pivotally attached to the loader, wherein the mainframe comprises a forward-most pivot point with (1) the pivot point at which the first linkage is attached to the mainframe, (2) the pivot point at which the actuator is attached to the mainframe, or (3) the pivot point at which the second linkage is attached to the mainframe being the forward-most pivot point, a vertical distance between the rotational axis and the forward-most pivot point being less than D1.

29. The compact tool carrier as set forth in claim 15 wherein the linkage is a first linkage, the compact tool carrier further comprising a second linkage pivotally attached to the first side of the mainframe at a pivot point and pivotally attached to the loader, wherein the mainframe comprises a forward-most pivot point with (1) the pivot point at which the first linkage is attached to the mainframe, (2) the pivot point at which the actuator is attached to the mainframe, or (3) the pivot point at which the second linkage is attached to the mainframe being the forward-most pivot point, a vertical distance between the rotational axis and the forward-most pivot point being less than 0.75 D1.

30. The compact tool carrier as set forth in claim 15 wherein the linkage is a first linkage, the compact tool carrier further comprising a second linkage pivotally attached to the first side of the mainframe at a pivot point and pivotally attached to the loader, wherein the mainframe comprises a forward-most pivot point with (1) the pivot point at which the first linkage is attached to the mainframe, (2) the pivot point at which the actuator is attached to the mainframe, or (3) the pivot point at which the second linkage is attached to the mainframe being the forward-most pivot point, a vertical distance between the rotational axis and the forward-most pivot point being less than 1.5 D5.

31. A compact tool carrier configured for standing or walk-behind operator control and having a longitudinal axis and a mass of less than about 1500 kg, the compact tool carrier comprising:

a loader adapted to carry a tool, the loader being moveable between a down position and a vertically raised position, the loader comprising:

a first loader arm;

a second loader arm; and

at least one cross-member that extends from the first loader arm to the second loader arm;

a mainframe for supporting the loader, the mainframe having a first side and a second side, and having a front end and a rear end relative to the longitudinal axis, the mainframe comprising an engine bracket that extends from the first side toward the second side for mounting an engine to the mainframe, the engine bracket being spaced from the rear end of the mainframe, the first loader arm not being directly attached to the mainframe;

a linkage pivotally attached to the first side of the mainframe and pivotally attached to the first loader arm;

an actuator pivotally attached to the first side of the mainframe and pivotally attached to the first loader arm;

a control station having operator controls for propelling the compact tool carrier forward and for raising and lowering the loader, the control station being mounted toward the rear of the compact tool carrier and adapted to allow for standing operation, each cross-member being disposed forward of the control station in the vertically raised position of the loader; and

an operator platform for standing operation of the operator controls of the control station.

32. The compact tool carrier as set forth in claim 31 wherein the linkage is a first linkage, the compact tool carrier further comprising a second linkage pivotally attached to the first side of the mainframe and pivotally attached to the first loader arm.

33. The compact tool carrier as set forth in claim 31 wherein the mainframe incorporates a single weldment.

34. The compact tool carrier as set forth in claim 31 wherein each cross-member is disposed forward of the operator platform and forward of the control station in the down position of the loader.

35. The compact tool carrier as set forth in claim 31 further comprising an attachment plate for removably attaching a tool to the compact tool carrier, the cross-member being spaced from the attachment plate.

36. The compact tool carrier as set forth in claim 35 further comprising an actuator for tilting of tools connected to the attachment plate, the actuator being connected to the cross-member and the attachment plate.

37. The compact tool carrier as set forth in claim 31 further comprising a drive mechanism for propelling the compact tool carrier over a supporting surface, the drive mechanism having a drive sprocket, the cross-member being disposed forward of the drive sprocket in the vertically raised position and the down position.

38. A compact tool carrier configured for standing or walk-behind operator control and having a longitudinal axis and a mass of less than about 1500 kg, the compact tool carrier comprising:

a loader being adapted to carry a tool, the loader comprising:

a first loader arm;

a second loader arm; and

a single cross-member that extends from the first loader arm to the second loader arm;

a mainframe for supporting the loader, the mainframe having a first side and a second side, and having a front end and a rear end relative to the longitudinal axis, the mainframe comprising an engine bracket that extends from the first side toward the second side for mounting an engine to the mainframe, the engine bracket being spaced from the rear of the mainframe, the first loader arm not being directly attached to the mainframe;

a linkage pivotally attached to the first side of the mainframe and pivotally attached to the first loader arm;

an actuator pivotally attached to the first side of the mainframe and pivotally attached to the first loader arm;

a control station having operator controls for propelling the compact tool carrier forward and for raising and lowering the loader, the control station being mounted toward the rear of the compact tool carrier and adapted to allow for standing operation; and

an operator platform for standing operation of the operator controls of the control station.

39. The compact tool carrier as set forth in claim 38 wherein the loader is moveable between a down position and a vertically raised position, the cross-member being disposed forward of the operator platform in the down position and the vertically raised position of the loader.

40. The compact tool carrier as set forth in claim 38 wherein the loader is moveable between a down position and a vertically raised position, the compact tool carrier further comprising a drive mechanism for propelling the compact tool carrier over a supporting surface, the drive mechanism having a drive sprocket, the cross-member being disposed forward of the drive sprocket in the down position and the vertically raised position of the loader.

41. The compact tool carrier as set forth in claim 38 wherein the linkage is a first linkage, the compact tool carrier further comprising a second linkage pivotally attached to the first side of the mainframe and pivotally attached to the first loader arm.

42. The compact tool carrier as set forth in claim 38 wherein the mainframe incorporates a single weldment.

43. The compact tool carrier as set forth in claim 38 further comprising an attachment plate for removably attaching a tool to the compact tool carrier, the cross-member being spaced from the attachment plate.

44. The compact tool carrier as set forth in claim 43 further comprising an actuator for tilting of tools connected to the attachment plate, the actuator being connected to the cross-member and the attachment plate.

45. A compact tool carrier configured for standing or walk-behind operator control and having a longitudinal axis and a mass of less than about 1500 kg, the compact tool carrier comprising:

a loader having an arm, the loader being adapted to carry a tool;

a mainframe for supporting the loader, the mainframe having a first side and a second side, and having a front end and a rear end relative to the longitudinal axis, the mainframe comprising an engine bracket that extends from the first side toward the second side for mounting an engine to the mainframe, the engine bracket being spaced from the rear of the mainframe, the loader arm not being directly attached to the mainframe;

a first linkage pivotally attached to the first side of the mainframe and pivotally attached to the loader arm at a first linkage pivot point;

a second linkage pivotally attached to the first side of the mainframe and pivotally attached to the loader arm at a second linkage pivot point, the loader being free of cross-members between the first linkage pivot point and the second linkage pivot point;

an actuator pivotally attached to the first side of the mainframe and pivotally attached to the loader arm at an actuator pivot point;

a control station having operator controls for propelling the compact tool carrier forward and for raising and lowering the loader, the control station being mounted toward the rear of the compact tool carrier and adapted to allow for standing or walk-behind operation; and

an operator platform for standing operation of the operator controls of the control station.

46. The compact tool carrier as set forth in claim 45 wherein the loader comprises:

a first arm;

a second arm; and

a cross-member that extends from the first arm to the second arm, the cross-member being disposed forward of the first linkage pivot point, the second linkage pivot point, and the actuator pivot point.

47. The compact tool carrier as set forth in claim 46 further comprising an attachment plate for removably attaching a tool to the compact tool carrier, the cross-member being spaced from the attachment plate.

48. The compact tool carrier as set forth in claim 47 further comprising an actuator for tilting of tools connected to the attachment plate, the actuator being connected to the cross-member and the attachment plate.

49. The compact tool carrier as set forth in claim 45 wherein the mainframe incorporates a single weldment.

50. A compact tool carrier configured for standing or walk-behind operator control and having a longitudinal axis and a mass of less than about 1500 kg, the compact tool carrier comprising:

a loader adapted to carry a tool, the loader comprising:

a first loader arm;

a second loader arm; and

at least one cross-member that extends from the first loader arm to the second loader arm;

a mainframe for supporting the loader, the mainframe having a first side and a second side, and having a front end and a rear end relative to the longitudinal axis, the mainframe comprising an engine bracket that extends from the first side toward the second side for mounting an engine to the mainframe, the engine bracket being spaced from the rear end of the mainframe, the first loader arm not being directly attached to the mainframe;

a first linkage pivotally attached to the first side of the mainframe and pivotally attached to the first loader arm at a first linkage pivot point;

a second linkage pivotally attached to the first side of the mainframe and pivotally attached to the first loader arm at a second linkage pivot point, each cross-member being disposed forward of the first linkage pivot point and the second linkage pivot point;

an actuator pivotally attached to the first side of the mainframe and pivotally attached to the first loader arm at an actuator pivot point;

a control station having operator controls for propelling the compact tool carrier forward and for raising and lowering the loader, the control station being mounted toward the rear of the compact tool carrier and adapted to allow for standing or walk-behind operation; and

an operator platform for standing operation of the operator controls of the control station.

51. The compact tool carrier as set forth in claim 50 wherein each cross-member is disposed forward of the actuator pivot point.

52. The compact tool carrier as set forth in claim 50 wherein the mainframe incorporates a single weldment.

53. The compact tool carrier as set forth in claim 50 further comprising an attachment plate for removably attaching a tool to the compact tool carrier, the cross-member being spaced from the attachment plate.

54. The compact tool carrier as set forth in claim 53 further comprising an actuator for tilting of tools connected to the attachment plate, the actuator being connected to the cross-member and the attachment plate.

55. A compact tool carrier configured for standing or walk-behind operator control and having a longitudinal axis and a mass of less than about 1500 kg, the compact tool carrier comprising:

a loader having an arm, the loader being adapted to carry a tool;

a mainframe for supporting the loader, the mainframe having a first side and a second side, and having a front end and a rear end relative to the longitudinal axis, the mainframe comprising an engine bracket that extends from the first side toward the second side for mounting an engine to the mainframe, the engine bracket being spaced from the rear end of the mainframe, each side having a top and a bottom, the first side of the mainframe having at least two pivot points relative to the loader, the loader arm not being directly attached to the mainframe;

a linkage pivotally attached to the first side of the mainframe and pivotally attached to the loader arm;

an actuator pivotally attached to the first side of the mainframe and pivotally attached to the loader arm;

a drive mechanism comprising tracks for propelling the compact tool carrier over a supporting surface, the drive mechanism having a rotational axis, the compact tool carrier having a bottom at which the drive mechanism contacts the supporting surface, the rotational axis and bottom of the compact tool carrier being separated by a vertical distance D1, the rotational axis and the bottom of the first side of the mainframe being separated by a vertical distance D5, the rotational axis and the pivot point at which the linkage is attached to the mainframe being separated by a vertical distance D2, the rotational axis and the pivot point at which the actuator is attached to the mainframe being separated by a vertical distance D4, both D2 and D4 being less than D1 and being less than 1.5 D5; and

a control station having operator controls for propelling the compact tool carrier forward and for raising and lowering the loader, the control station being mounted toward the rear of the compact tool carrier and adapted to allow for standing or walk-behind operation.

56. The compact tool carrier as set forth in claim 55 wherein D2 and D4 are each less than 0.75 D1.

57. The compact tool carrier as set forth in claim 55 wherein the linkage is a first linkage, the compact tool carrier further comprising a second linkage pivotally attached to the first side of the mainframe at a pivot point and pivotally attached to the loader, the rotational axis and the pivot point at which the second linkage is attached to the mainframe being separated by a vertical distance D3, D3 being less than 1.5 times D1.

58. The compact tool carrier as set forth in claim 55 wherein the linkage is a first linkage, the compact tool carrier further comprising a second linkage pivotally attached to the first side of the mainframe at a pivot point and pivotally attached to the loader, wherein the mainframe comprises a forward-most pivot point with (1) the pivot point at which the first linkage is attached to the mainframe, (2) the pivot point at which the actuator is attached to the mainframe, or (3) the pivot point at which the second linkage is attached to the mainframe being the forward-most pivot point, a vertical distance between the rotational axis and the forward-most pivot point being less than D1.

59. The compact tool carrier as set forth in claim 55 wherein the linkage is a first linkage, the compact tool carrier further comprising a second linkage pivotally attached to the first side of the mainframe at a pivot point and pivotally attached to the loader, wherein the mainframe comprises a forward-most pivot point with (1) the pivot point at which the first linkage is attached to the mainframe, (2) the pivot point at which the actuator is attached to the mainframe, or (3) the pivot point at which the second linkage is attached to the mainframe being the forward-most pivot point, a vertical distance between the rotational axis and the forward-most pivot point being less than 0.75 D1.

60. The compact tool carrier as set forth in claim 55 wherein the linkage is a first linkage, the compact tool carrier further comprising a second linkage pivotally attached to the first side of the mainframe at a pivot point and pivotally attached to the loader, wherein the mainframe comprises a forward-most pivot point with (1) the pivot point at which the first linkage is attached to the mainframe, (2) the pivot point at which the actuator is attached to the mainframe, or (3) the pivot point at which the second linkage is attached to the mainframe being the forward-most pivot point, a vertical distance between the rotational axis and the forward-most pivot point being less than 0.75 D5.

61. The compact tool carrier as set forth in claim 55 wherein the drive mechanism comprises a drive sprocket, the drive sprocket rotating about the rotational axis.

62. The compact tool carrier as set forth in claim 55 further comprising an operator platform for standing operation of the operator controls of the control station.

63. The compact tool carrier as set forth in claim 55 wherein the mainframe incorporates a single weldment.

* * * * *

☐ YES ☒ NO INID CODE: (30) **24.** Foreign Priority
Give doc code and date of document adding data:
IFW doc code _____ Date _____

☐ YES ☒ NO INID CODE: (57) **25.** Abstract
Give doc code and date:
IFW doc code _____ Date _____

26. For item 26, (a) check the box indicating which document identifies the correct, current **owner/assignee** of the patent, and (b) indicate the date of the document that you checked.

(**Examiner Note**: only **one** box is to be checked and completed.)

☒ **(a)** Title Report, (b) Prepared [Give doc code and date]

IFW doc code RXTTLRPT Date 03/01/2017

☐ **(b)** § 3.73 (b) Statement, (b) Filed [Give doc code and date]

IFW doc code _____ Date _____

(**Examiner Note**:Give the latest document, unless the record reflects that an earlier document gives the current patent owner/assignee.)

EXAMINER	DATE	CRU SPE/TC SPRE REVIEW	DATE
/William C. Doerrler/ Reexamination Specialist AU 3993	03/16/2018	/Eileen Lillis/ SPRS	3/16/18

OK to Enter
/WCD/
March 1, 2018

AMENDMENTS TO THE CLAIMS

Please amend claim 15 as follows:

15. (Amended) A compact tool carrier comprising:

a loader adapted to carry a tool;

a mainframe for supporting the loader, the mainframe having a first side and a second side, and having a front end and a rear end relative to the longitudinal axis, the mainframe comprising an engine bracket that extends from the first side toward the second side for mounting an engine to the mainframe, the engine bracket being spaced from the rear end of the mainframe, each side having a top and a bottom, the first side of the mainframe having at least two pivot points relative to the loader, the loader not being directly attached to the mainframe;

a linkage pivotally attached to the first side of the mainframe at a pivot point and pivotally attached to the loader;

an actuator pivotally attached to the first side of the mainframe at a pivot point and pivotally attached to the loader;

a drive mechanism comprising tracks or wheels for propelling the compact tool carrier over a supporting surface, the drive mechanism being attached to the mainframe about a rotational axis, the compact tool carrier having a bottom at which the drive mechanism contacts the supporting surface, the rotational axis and bottom of the compact tool carrier being separated by a vertical distance D1, <u>the rotational axis and the bottom of the first side of the mainframe being separated by a vertical distance D5,</u> the rotational axis and <u>the</u> [each] pivot point <u>at which the linkage is attached to the mainframe</u> being separated by a vertical distance <u>D2, the rotational axis and the pivot point at which the actuator is attached to the mainframe being separated by a vertical distance D4</u>, [each vertical distance between the rotational axis and a pivot point] <u>D2 and D4 each</u> being less than 1.5 times D1 <u>and each being less than twice D5</u>; and

a control station having operator controls for propelling the compact tool carrier forward and for raising and/or lowering the loader, the control station being mounted toward the rear of the compact tool carrier and adapted to allow for standing or walk-behind operation.

Please cancel claim 16.

Please amend claim 17 as follows:

17. (Amended) The compact tool carrier as set forth in claim 15 [16] wherein the second side of the mainframe comprises two pivot points, each vertical distance between the rotational axis and a pivot point being less than 1.5 times D1.

Please cancel claim 18.

Please amend claim 19 as follows:

19. (Amended) The compact tool carrier as set forth in claim 15 [18] wherein the first side of the mainframe comprises a top most pivot point, the top most pivot point and the top of the first side of the mainframe being separated by a vertical distance D6, D6 being less than about 1.5 times D5.

Please insert new claims 21-63:

21. (New) The compact tool carrier as set forth in claim 1 wherein the linkage is a first linkage, the first linkage being pivotally attached to the first side of the mainframe at a first pivot point and pivotally attached to the loader arm at a second pivot point, the

actuator being attached to the mainframe at a third pivot point and pivotally attached to the loader arm at a fourth pivot point, the compact tool carrier further comprising a second linkage pivotally attached to the first side of the mainframe at a fifth pivot point and pivotally attached to the loader arm at a sixth pivot point, wherein as the loader travels from a down position to a vertically raised position, the first, second, third, fourth, fifth, and sixth pivot points are (1) disposed between the operator controls and a bottom of the mainframe and/or (2) disposed forward of the control station.

22. (New) The compact tool carrier as set forth in claim 21 further comprising an operator platform for standing operation of the operator controls of the control station, the operator platform being located toward a rear of the compact tool carrier such that the first pivot point, third pivot point, and fifth pivot point are disposed forward of the operator platform.

23. (New) The compact tool carrier as set forth in claim 15 wherein D2 and D4 are each less than 1.75 D5.

24. (New) The compact tool carrier as set forth in claim 15 wherein D2 and D4 are each less than 1.5 D5.

25. (New) The compact tool carrier as set forth in claim 15 wherein D2 and D4 are each less than D1.

26. (New) The compact tool carrier as set forth in claim 15 wherein D2 and D4 are each less than 0.75 D1.

27. (New) The compact tool carrier as set forth in claim 15 wherein the linkage is a first linkage, the compact tool carrier further comprising a second linkage pivotally attached to the first side of the mainframe at a pivot point and pivotally attached to the loader, the rotational axis and the pivot point at which the second linkage is attached to the mainframe being separated by a vertical distance D3, D3 being less than 1.5 times D1.

28. (New) The compact tool carrier as set forth in claim 15 wherein the linkage is a first linkage, the compact tool carrier further comprising a second linkage pivotally attached to the first side of the mainframe at a pivot point and pivotally attached to the loader, wherein the mainframe comprises a forward-most pivot point with (1) the pivot point at which the first linkage is attached to the mainframe, (2) the pivot point at which the actuator is attached to the mainframe, or (3) the pivot point at which the second linkage is attached to the mainframe being the forward-most pivot point, a vertical distance between the rotational axis and the forward-most pivot point being less than D1.

29. (New) The compact tool carrier as set forth in claim 15 wherein the linkage is a first linkage, the compact tool carrier further comprising a second linkage pivotally attached to the first side of the mainframe at a pivot point and pivotally attached to the loader, wherein the mainframe comprises a forward-most pivot point with (1) the pivot point at which the first linkage is attached to the mainframe, (2) the pivot point at which the actuator is attached to the mainframe, or (3) the pivot point at which the second linkage is attached to the mainframe being the forward-most pivot point, a vertical distance between the rotational axis and the forward-most pivot point being less than 0.75 D1.

30. (New) The compact tool carrier as set forth in claim 15 wherein the linkage is a first linkage, the compact tool carrier further comprising a second linkage pivotally attached to the first side of the mainframe at a pivot point and pivotally attached to the loader, wherein the mainframe comprises a forward-most pivot point with (1) the pivot point at which the first linkage is attached to the mainframe, (2) the pivot point at which the actuator is attached to the mainframe, or (3) the pivot point at which the second linkage is attached to the mainframe being the forward-most pivot point, a vertical distance between the rotational axis and the forward-most pivot point being less than 1.5 D5.

31. (New) A compact tool carrier configured for standing or walk-behind operator control and having a longitudinal axis and a mass of less than about 1500 kg, the compact tool carrier comprising:

a loader adapted to carry a tool, the loader being moveable between a down position and a vertically raised position, the loader comprising:

a first loader arm;

a second loader arm; and

at least one cross-member that extends from the first loader arm to the second loader arm;

a mainframe for supporting the loader, the mainframe having a first side and a second side, and having a front end and a rear end relative to the longitudinal axis, the mainframe comprising an engine bracket that extends from the first side toward the second side for mounting an engine to the mainframe, the engine bracket being spaced from the rear end of the mainframe, the first loader arm not being directly attached to the mainframe;

a linkage pivotally attached to the first side of the mainframe and pivotally attached to the first loader arm;

an actuator pivotally attached to the first side of the mainframe and pivotally attached to the first loader arm;

a control station having operator controls for propelling the compact tool carrier forward and for raising and lowering the loader, the control station being mounted toward the rear of the compact tool carrier and adapted to allow for standing operation, each cross-member being disposed forward of the control station in the vertically raised position of the loader; and

an operator platform for standing operation of the operator controls of the control station.

32. (New) The compact tool carrier as set forth in claim 31 wherein the linkage is a first linkage, the compact tool carrier further comprising a second linkage pivotally attached to the first side of the mainframe and pivotally attached to the first loader arm.

33. (New) The compact tool carrier as set forth in claim 31 wherein the mainframe incorporates a single weldment.

34. (New) The compact tool carrier as set forth in claim 31 wherein each cross-member is disposed forward of the operator platform and forward of the control station in the down position of the loader.

35. (New) The compact tool carrier as set forth in claim 31 further comprising an attachment plate for removably attaching a tool to the compact tool carrier, the cross-member being spaced from the attachment plate.

36. (New) The compact tool carrier as set forth in claim 35 further comprising an actuator for tilting of tools connected to the attachment plate, the actuator being connected to the cross-member and the attachment plate.

37. (New) The compact tool carrier as set forth in claim 31 further comprising a drive mechanism for propelling the compact tool carrier over a supporting surface, the drive mechanism having a drive sprocket, the cross-member being disposed forward of the drive sprocket in the vertically raised position and the down position.

38. (New) A compact tool carrier configured for standing or walk-behind operator control and having a longitudinal axis and a mass of less than about 1500 kg, the compact tool carrier comprising:

a loader being adapted to carry a tool, the loader comprising:

a first loader arm;

a second loader arm; and

a single cross-member that extends from the first loader arm to the second loader arm;

a mainframe for supporting the loader, the mainframe having a first side and a second side, and having a front end and a rear end relative to the longitudinal axis, the mainframe comprising an engine bracket that extends from the first side toward the second side for mounting an engine to the mainframe, the engine bracket being spaced from the rear of the mainframe, the first loader arm not being directly attached to the mainframe;

a linkage pivotally attached to the first side of the mainframe and pivotally attached to the first loader arm;

an actuator pivotally attached to the first side of the mainframe and pivotally attached to the first loader arm;

a control station having operator controls for propelling the compact tool carrier forward and for raising and lowering the loader, the control station being mounted toward the rear of the compact tool carrier and adapted to allow for standing operation; and

an operator platform for standing operation of the operator controls of the control station.

39. (New) The compact tool carrier as set forth in claim 38 wherein the loader is moveable between a down position and a vertically raised position, the cross-member being disposed forward of the operator platform in the down position and the vertically raised position of the loader.

40. (New) The compact tool carrier as set forth in claim 38 wherein the loader is moveable between a down position and a vertically raised position, the compact tool carrier further comprising a drive mechanism for propelling the compact tool carrier over a supporting surface, the drive mechanism having a drive sprocket, the cross-member

being disposed forward of the drive sprocket in the down position and the vertically raised position of the loader.

41. (New) The compact tool carrier as set forth in claim 38 wherein the linkage is a first linkage, the compact tool carrier further comprising a second linkage pivotally attached to the first side of the mainframe and pivotally attached to the first loader arm.

42. (New) The compact tool carrier as set forth in claim 38 wherein the mainframe incorporates a single weldment.

43. (New) The compact tool carrier as set forth in claim 38 further comprising an attachment plate for removably attaching a tool to the compact tool carrier, the cross-member being spaced from the attachment plate.

44. (New) The compact tool carrier as set forth in claim 43 further comprising an actuator for tilting of tools connected to the attachment plate, the actuator being connected to the cross-member and the attachment plate.

45. (New) A compact tool carrier configured for standing or walk-behind operator control and having a longitudinal axis and a mass of less than about 1500 kg, the compact tool carrier comprising:

a loader having an arm, the loader being adapted to carry a tool;

a mainframe for supporting the loader, the mainframe having a first side and a second side, and having a front end and a rear end relative to the longitudinal axis, the mainframe comprising an engine bracket that extends from the first side toward the second side for mounting an engine to the mainframe, the engine bracket being spaced from the rear of the mainframe, the loader arm not being directly attached to the mainframe;

a first linkage pivotally attached to the first side of the mainframe and pivotally attached to the loader arm at a first linkage pivot point;

a second linkage pivotally attached to the first side of the mainframe and pivotally attached to the loader arm at a second linkage pivot point, the loader being free of cross-members between the first linkage pivot point and the second linkage pivot point;

an actuator pivotally attached to the first side of the mainframe and pivotally attached to the loader arm at an actuator pivot point;

a control station having operator controls for propelling the compact tool carrier forward and for raising and lowering the loader, the control station being mounted toward the rear of the compact tool carrier and adapted to allow for standing or walk-behind operation; and

an operator platform for standing operation of the operator controls of the control station.

46. (New) The compact tool carrier as set forth in claim 45 wherein the loader comprises:

a first arm;

a second arm; and

a cross-member that extends from the first arm to the second arm, the cross-member being disposed forward of the first linkage pivot point, the second linkage pivot point, and the actuator pivot point.

47. (New) The compact tool carrier as set forth in claim 46 further comprising an attachment plate for removably attaching a tool to the compact tool carrier, the cross-member being spaced from the attachment plate.

48. (New) The compact tool carrier as set forth in claim 47 further comprising an actuator for tilting of tools connected to the attachment plate, the actuator being connected to the cross-member and the attachment plate.

49. (New) The compact tool carrier as set forth in claim 45 wherein the mainframe incorporates a single weldment.

50. (New) A compact tool carrier configured for standing or walk-behind operator control and having a longitudinal axis and a mass of less than about 1500 kg, the compact tool carrier comprising:

a loader adapted to carry a tool, the loader comprising:

a first loader arm;

a second loader arm; and

at least one cross-member that extends from the first loader arm to the second loader arm;

a mainframe for supporting the loader, the mainframe having a first side and a second side, and having a front end and a rear end relative to the longitudinal axis, the mainframe comprising an engine bracket that extends from the first side toward the second side for mounting an engine to the mainframe, the engine bracket being spaced from the rear end of the mainframe, the first loader arm not being directly attached to the mainframe;

a first linkage pivotally attached to the first side of the mainframe and pivotally attached to the first loader arm at a first linkage pivot point;

a second linkage pivotally attached to the first side of the mainframe and pivotally attached to the first loader arm at a second linkage pivot point, each cross-member being disposed forward of the first linkage pivot point and the second linkage pivot point;

an actuator pivotally attached to the first side of the mainframe and pivotally attached to the first loader arm at an actuator pivot point;

a control station having operator controls for propelling the compact tool carrier forward and for raising and lowering the loader, the control station being mounted

toward the rear of the compact tool carrier and adapted to allow for standing or walk-behind operation; and

an operator platform for standing operation of the operator controls of the control station.

51. (New) The compact tool carrier as set forth in claim 50 wherein each cross-member is disposed forward of the actuator pivot point.

52. (New) The compact tool carrier as set forth in claim 50 wherein the mainframe incorporates a single weldment.

53. (New) The compact tool carrier as set forth in claim 50 further comprising an attachment plate for removably attaching a tool to the compact tool carrier, the cross-member being spaced from the attachment plate.

54. (New) The compact tool carrier as set forth in claim 53 further comprising an actuator for tilting of tools connected to the attachment plate, the actuator being connected to the cross-member and the attachment plate.

55. (New) A compact tool carrier configured for standing or walk-behind operator control and having a longitudinal axis and a mass of less than about 1500 kg, the compact tool carrier comprising:

a loader having an arm, the loader being adapted to carry a tool;

a mainframe for supporting the loader, the mainframe having a first side and a second side, and having a front end and a rear end relative to the longitudinal axis, the mainframe comprising an engine bracket that extends from the first side toward the second side for mounting an engine to the mainframe, the engine bracket being spaced from the rear end of the mainframe, each side having a top and a bottom, the first side of the mainframe having at least two pivot points relative to the loader, the loader arm not being directly attached to the mainframe;

a linkage pivotally attached to the first side of the mainframe and pivotally attached to the loader arm;

an actuator pivotally attached to the first side of the mainframe and pivotally attached to the loader arm;

a drive mechanism comprising tracks for propelling the compact tool carrier over a supporting surface, the drive mechanism having a rotational axis, the compact tool carrier having a bottom at which the drive mechanism contacts the supporting surface, the rotational axis and bottom of the compact tool carrier being separated by a vertical distance D1, the rotational axis and the bottom of the first side of the mainframe being separated by a vertical distance D5, the rotational axis and the pivot point at which the linkage is attached to the mainframe being separated by a vertical distance D2, the rotational axis and the pivot point at which the actuator is attached to the mainframe being separated by a vertical distance D4, both D2 and D4 being less than D1 and being less than 1.5 D5; and

a control station having operator controls for propelling the compact tool carrier forward and for raising and lowering the loader, the control station being mounted toward the rear of the compact tool carrier and adapted to allow for standing or walk-behind operation.

56. (New) The compact tool carrier as set forth in claim 55 wherein D2 and D4 are each less than 0.75 D1.

57. (New) The compact tool carrier as set forth in claim 55 wherein the linkage is a first linkage, the compact tool carrier further comprising a second linkage pivotally attached to the first side of the mainframe at a pivot point and pivotally attached to the loader, the rotational axis and the pivot point at which the second linkage is attached to the mainframe being separated by a vertical distance D3, D3 being less than 1.5 times D1.

58. (New) The compact tool carrier as set forth in claim 55 wherein the linkage is a first linkage, the compact tool carrier further comprising a second linkage pivotally

attached to the first side of the mainframe at a pivot point and pivotally attached to the loader, wherein the mainframe comprises a forward-most pivot point with (1) the pivot point at which the first linkage is attached to the mainframe, (2) the pivot point at which the actuator is attached to the mainframe, or (3) the pivot point at which the second linkage is attached to the mainframe being the forward-most pivot point, a vertical distance between the rotational axis and the forward-most pivot point being less than D1.

59. (New) The compact tool carrier as set forth in claim 55 wherein the linkage is a first linkage, the compact tool carrier further comprising a second linkage pivotally attached to the first side of the mainframe at a pivot point and pivotally attached to the loader, wherein the mainframe comprises a forward-most pivot point with (1) the pivot point at which the first linkage is attached to the mainframe, (2) the pivot point at which the actuator is attached to the mainframe, or (3) the pivot point at which the second linkage is attached to the mainframe being the forward-most pivot point, a vertical distance between the rotational axis and the forward-most pivot point being less than 0.75 D1.

60. (New) The compact tool carrier as set forth in claim 55 wherein the linkage is a first linkage, the compact tool carrier further comprising a second linkage pivotally attached to the first side of the mainframe at a pivot point and pivotally attached to the loader, wherein the mainframe comprises a forward-most pivot point with (1) the pivot point at which the first linkage is attached to the mainframe, (2) the pivot point at which the actuator is attached to the mainframe, or (3) the pivot point at which the second linkage is attached to the mainframe being the forward-most pivot point, a vertical distance between the rotational axis and the forward-most pivot point being less than 0.75 D5.

61. (New) The compact tool carrier as set forth in claim 55 wherein the drive mechanism comprises a drive sprocket, the drive sprocket rotating about the rotational axis.

62. (New) The compact tool carrier as set forth in claim 55 further comprising an operator platform for standing operation of the operator controls of the control station.

63. (New) The compact tool carrier as set forth in claim 55 wherein the mainframe incorporates a single weldment.

OK to Enter
/WCD/
March 1, 2018

IN THE UNITED STATES PATENT AND TRADEMARK OFFICE

U.S. Patent No. 9,321,386
Inventors: Brad Thomas et al. Art Unit: 3993
Reexamination Control No.: 90/013,915
Filed: February 28, 2017
Confirmation No.: 3754
For: LOW PROFILE COMPACT TOOL CARRIERS
Examiner: William Charles Doerrler
Conferees: Jeffrey Gellner and Gay Spahn

January 25, 2018

AMENDMENT AND RESPONSE TO FINAL OFFICE ACTION

TO THE COMMISSIONER FOR PATENTS,

SIR:

Please enter the following amendments and consider the following remarks in the above-identified *ex parte* reexamination of U.S. Patent No. 9,321,386:

Amendments to the Claims begin on page 2;

Amendments to the Specification begin on page 16;

Amendments to the Drawings begin on page 18; and

Remarks begin on page 19.

OK to Enter
/WCD/
March 1, 2018

ANNOTATED SHEET

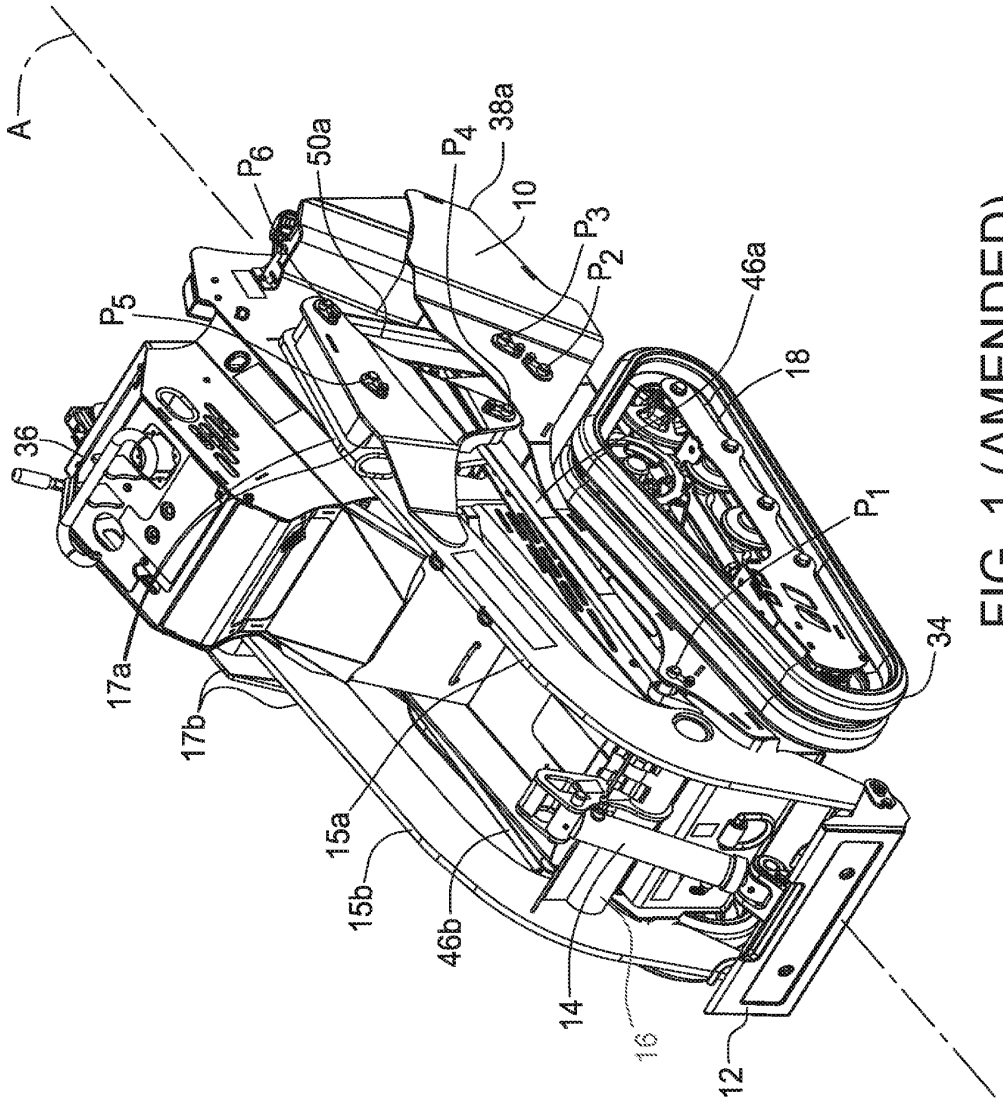

FIG. 1 (AMENDED)

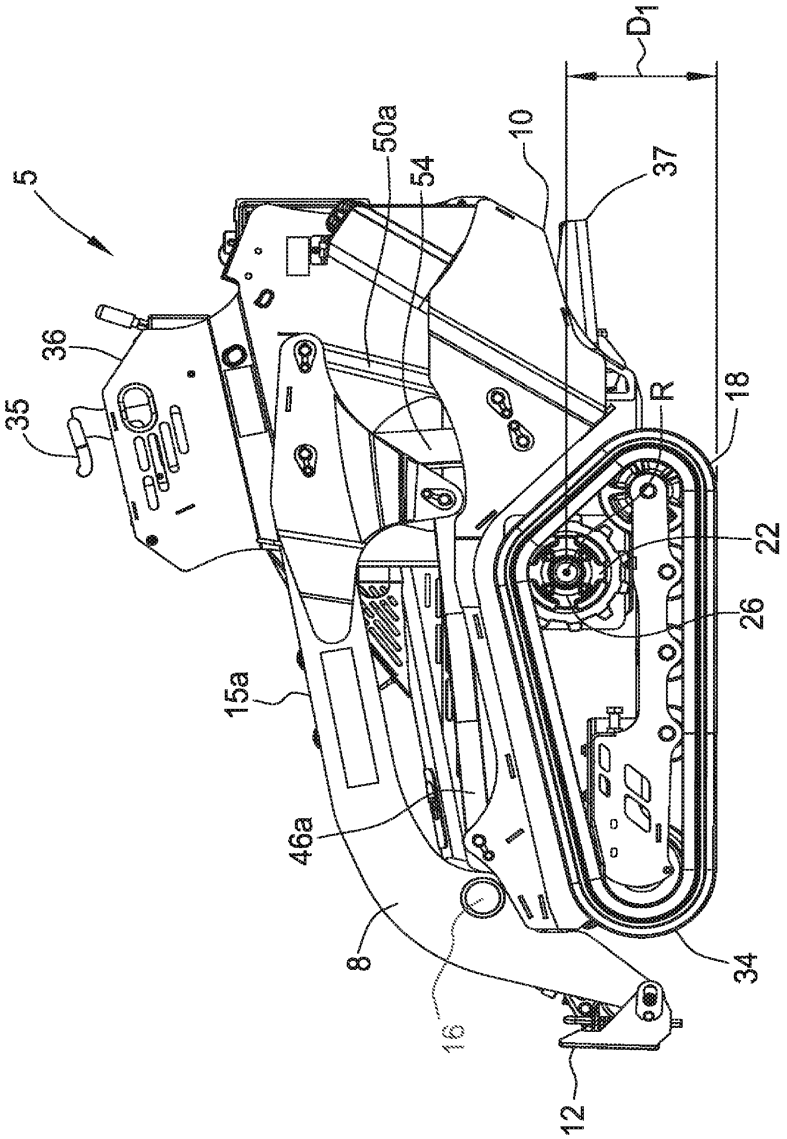

FIG. 2 (AMENDED)

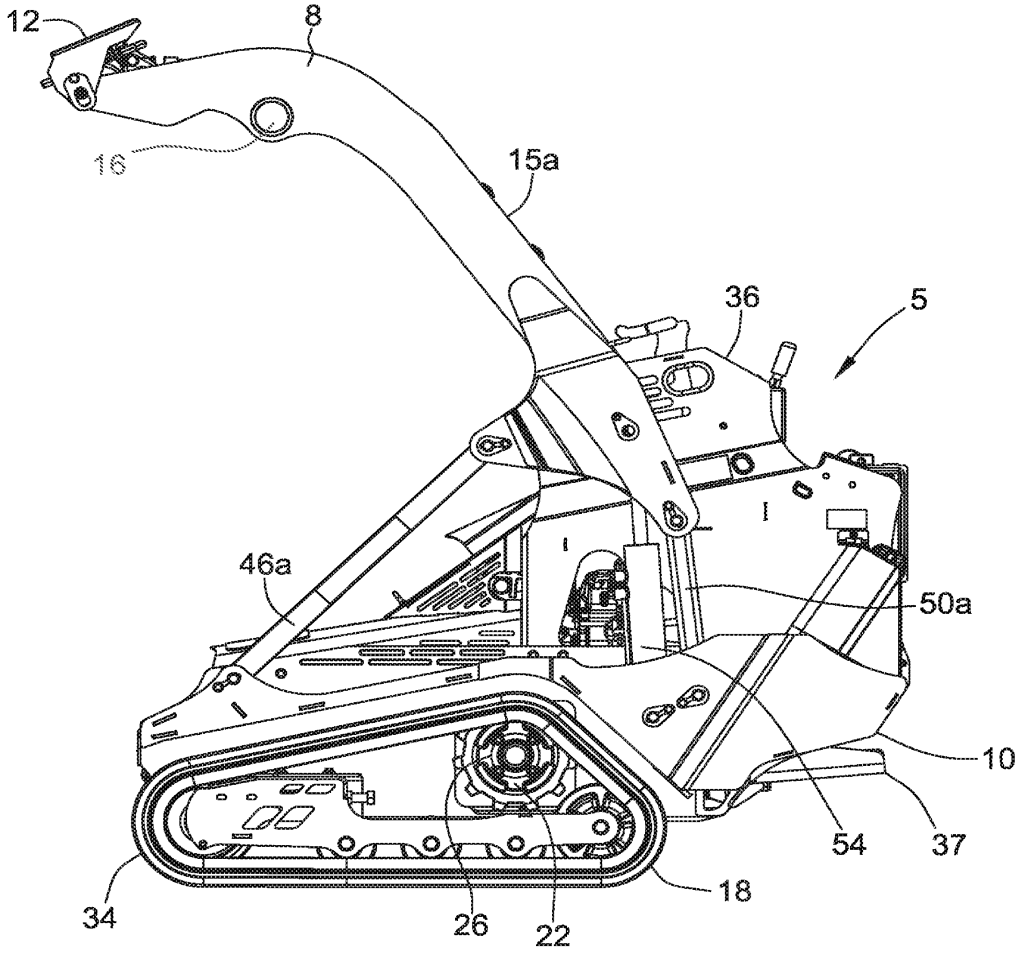

FIG. 3 (AMENDED)

OK to Enter
/WCD/
March 1, 2018

AMENDMENTS TO THE SPECIFICATION

Please replace the paragraph that begins at column 2, line 44 with the following paragraph:

An embodiment of a compact tool carrier is generally referred as "5" in FIG. 1. The compact tool carrier 5 includes a loader 8 supported by a mainframe 10. The loader 8 includes an attachment plate 12 for interchangeably attaching any one of a number of tools (not shown). In this regard, such interchangeable tools do not form part of the compact tool carrier 5 unless stated otherwise. The attachment plate 12 is connected to an actuator 14 for tilting of tools connected to the attachment plate 12. The loader 8 has a first arm 15a and a second arm 15b generally opposite the first arm 15a. A cross-member 16 extends from the first arm 15a to the second arm 15b. The actuator 14 is connected to the cross-member 16. Each arm 15a, 15b may be a single weldment or may include various components attached by fasteners (e.g., nuts and bolts). The first and second arms 15a, 15b each include a bracket portion 17a, 17b (FIG. 1) for fastening various linkages.

Please replace the paragraph that begins at column 3, line 20 with the following paragraph:

The compact tool carrier 5 includes a drive mechanism 18 attached to the mainframe 10. In the illustrated embodiment, the drive mechanism 18 is directly mounted (i.e., connected without intermediary parts) to the mainframe 10 by way of drive sprocket 22 connected to a hub 26 (FIG. 2). The hub 26 is attached to a shaft (not shown) that extends through a drive opening 30 (FIG. 4) of the mainframe 10. The sprocket 22, hub 26 and shaft (not shown) rotate about a rotational axis R (FIG. 5). As shown, the drive mechanism 18 includes tracks 34. In other embodiments, the drive mechanism 18 [10] includes wheels.

Please replace the paragraph that begins at column 4, line 35 with the following paragraph:

An actuator 54, shown as a hydraulic cylinder, is attached to the first side 38a of the mainframe 10 at its center pivot point $\underline{P_2}$ [P_4] and is attached to the loader arm 15a at its center pivot point P_5 to raise the loader 8. The compact tool carrier 5 may include a single actuator 54, or, as in other embodiments, a second actuator (not shown) is connected to the second side 38b (FIG. 4) of the mainframe 10 and the second arm 15b (FIG. 1). The actuator 54 is powered to raise the loader 8 and, in some embodiments, is also powered to lower the loader 8 (as opposed to a one-way actuator lowered by gravity alone).

Please replace the paragraph that begins at column 5, line 4 with the following paragraph:

In some embodiments, the mainframe 10 is characterized by a relatively low profile (i.e., the pivot points are positioned relatively low on the mainframe allowing its height to be reduced). The rotational axis R (FIG. 5) and the bottom of the compact tool carrier 5 (FIG. 2) are separated by a distance D1. Generally, the bottom of the compact tool carrier 5 corresponds to the point at which the drive mechanism 18 contacts the surface supporting the compact tool carrier 5. The rotational axis R and the forward pivot point P_1 of the first side 38a of the mainframe 10 are separated by a vertical distance D2. The rotational axis R and the rear pivot point P_3 are separated by a vertical distance D3. The rotational axis R and the central pivot point $\underline{P_2}$ [P_4] are separated by a vertical distance D4. Each of D2, D3 and D4 is less than about 1.5 times D1 (1.5xD1). In some embodiments, each of D2, D3 and D4 is less than D1 or even less than about 0.75 times D1 (0.75xD1).

UNITED STATES PATENT AND TRADEMARK OFFICE

UNITED STATES DEPARTMENT OF COMMERCE
United States Patent and Trademark Office
Address: COMMISSIONER FOR PATENTS
P.O. Box 1450
Alexandria, Virginia 22313-1450
www.uspto.gov

APPLICATION NO.	FILING DATE	FIRST NAMED INVENTOR	ATTORNEY DOCKET NO.	CONFIRMATION NO.
90/013,915	02/28/2017	9321386	Vermeer-386Reex	3754

76656 7590 02/23/2018
Patent Docket Department
Armstrong Teasdale LLP
7700 Forsyth Boulevard
Suite 1800
St. Louis, MO 63105

EXAMINER
DOERRLER, WILLIAM CHARLES

ART UNIT	PAPER NUMBER
3993	

MAIL DATE	DELIVERY MODE
02/23/2018	PAPER

Please find below and/or attached an Office communication concerning this application or proceeding.

The time period for reply, if any, is set in the attached communication.

PTOL-90A (Rev. 04/07)

UNITED STATES PATENT AND TRADEMARK OFFICE

Commissioner for Patents
United States Patent and Trademark Office
P.O. Box 1450
Alexandria, VA 22313-1450
www.uspto.gov

DO NOT USE IN PALM PRINTER

(THIRD PARTY REQUESTER'S CORRESPONDENCE ADDRESS)

James W. Miller, Attorney
527 Marquette Avenue
Suite 1960, Rand Tower
Minneapolis, MN 55402

EX PARTE REEXAMINATION COMMUNICATION TRANSMITTAL FORM

REEXAMINATION CONTROL NO. *90/013,915*.

PATENT NO. *9321386*.

ART UNIT *3993*.

Enclosed is a copy of the latest communication from the United States Patent and Trademark Office in the above identified *ex parte* reexamination proceeding (37 CFR 1.550(f)).

Where this copy is supplied after the reply by requester, 37 CFR 1.535, or the time for filing a reply has passed, no submission on behalf of the *ex parte* reexamination requester will be acknowledged or considered (37 CFR 1.550(g)).

/William C Doerrler/
Primary Examiner
Art Unit: 3993

PTOL-465 (Rev.07-04)

Notice of Intent to Issue Ex Parte Reexamination Certificate	Control No.	Patent Under Reexamination	
	90/013,915	9321386	
	Examiner	Art Unit	AIA (First Inventor to File) Status
	WILLIAM DOERRLER	3993	Yes

-- The MAILING DATE of this communication appears on the cover sheet with the correspondence address --

1. ☒ Prosecution on the merits is (or remains) closed in this *ex parte* reexamination proceeding. This proceeding is subject to reopening at the initiative of the Office or upon petition. *Cf.* 37 CFR 1.313(a). A Certificate will be issued in view of
   (a) ☒ Patent owner's communication(s) filed: *25 January 2018*.
   (b) ☐ Patent owner's failure to file an appropriate timely response to the Office action mailed: _____.
   (c) ☐ Patent owner's failure to timely file an Appeal Brief (37 CFR 41.31).
   (d) ☐ The decision on appeal by the ☐ Board of Patent Appeals and Interferences ☐ Court dated _____
   (e) ☐ Other: _____.
2. The Reexamination Certificate will indicate the following:
   (a) Change in the Specification: ☒ Yes ☐ No
   (b) Change in the Drawing(s): ☒ Yes ☐ No
   (c) Status of the Claim(s):
      (1) Patent claim(s) confirmed: *1 and 3-13*.
      (2) Patent claim(s) amended (including dependent on amended claim(s)): *15,17,19 and 20*
      (3) Patent claim(s) canceled: *16 and 18*.
      (4) Newly presented claim(s) patentable: 21-63.
      (5) Newly presented canceled claims: _____.
      (6) Patent claim(s) ☐ previously ☐ currently disclaimed: _____
      (7) Patent claim(s) not subject to reexamination: 2 and 14.
3. ☐ A declaration(s)/affidavit(s) under **37 CFR 1.130(b)** was/were filed on _____.
4. ☒ Note the attached statement of reasons for patentability and/or confirmation. Any comments considered necessary by patent owner regarding reasons for patentability and/or confirmation must be submitted promptly to avoid processing delays. Such submission(s) should be labeled: "Comments On Statement of Reasons for Patentability and/or Confirmation."
5. ☐ Note attached NOTICE OF REFERENCES CITED (PTO-892).
6. ☐ Note attached LIST OF REFERENCES CITED (PTO/SB/08 or PTO/SB/08 substitute).
7. ☒ The drawing correction request filed on *25 January 2018* is: ☒ approved ☐ disapproved.
8. ☐ Acknowledgment is made of the priority claim under 35 U.S.C. § 119(a)-(d) or (f).
   a)☐ All b)☐ Some* c)☐ None of the certified copies have
   ☐ been received.
   ☐ not been received.
   ☐ been filed in Application No. _____.
   ☐ been filed in reexamination Control No. _____.
   ☐ been received by the International Bureau in PCT Application No. _____.

   * Certified copies not received: _____.
9. ☐ Note attached Examiner's Amendment.
10. ☐ Note attached Interview Summary (PTO-474).
11. ☐ Other: _____.

All correspondence relating to this reexamination proceeding should be directed to the **Central Reexamination Unit** at the mail, FAX, or hand-carry addresses given at the end of this Office action.

/William C Doerrler/
Primary Examiner
Art Unit: 3993

cc: Requester (if third party requester)

The present application, filed on or after March 16, 2013, is being examined under the first inventor to file provisions of the AIA.

STATEMENT OF REASONS FOR PATENTABILITY AND/OR CONFIRMATION

The following is an examiner's statement of reasons for patentability and/or confirmation of the claims found patentable in this reexamination proceeding: Applicant's arguments are persuasive that there would be no expectation of success from adding the lift mechanism of Mustang to the S450TX skid steer. The rear cross member of the Mustang lift system could not be present on a smaller rear controlled skid steer, as it would inhibit access to the controls and be positioned where either the operator or the engine are located. It is further noted that the increase of lift capacity from using the claimed vertical lift (32% increase over the radial lift) was unexpected. It is further no longer considered obvious for an ordinary practitioner at the time of invention to combine the known compact S450TX with the much larger known vertical lift system of the Mustang reference as it was stated by the requester in US PG Pub 2016/0244937, "While high lift loader arms are known on full size skid steer loaders as disclosed in U.S. Pat. No. 5,542,814, the use of such high lift loader arms on a compact utility loader has been considered difficult if not impossible due to size and durability constraints." The "less than about" language was taken from the patented claims, so the rejection regarding this language has been withdrawn.

Any comments considered necessary by PATENT OWNER regarding the above statement must be submitted promptly to avoid processing delays. Such submission by the patent owner should be labeled: "Comments on Statement of Reasons for Patentability and/or Confirmation" and will be placed in the reexamination file.

Any inquiry concerning this communication or earlier communications from the examiner should be directed to WILLIAM DOERRLER whose telephone number is (571)272-4807. The examiner can normally be reached on Monday-Friday 6-30- 4:30.

Examiner interviews are available via telephone, in-person, and video conferencing using a USPTO supplied web-based collaboration tool. To schedule an interview, applicant is encouraged to use the USPTO Automated Interview Request (AIR) at http://www.uspto.gov/interviewpractice.

If attempts to reach the examiner by telephone are unsuccessful, the examiner's supervisor, Eileen Lillis can be reached on (571) 272-6928. The fax phone number for the organization where this application or proceeding is assigned is 571-273-8300.

Information regarding the status of an application may be obtained from the Patent Application Information Retrieval (PAIR) system. Status information for published applications may be obtained from either Private PAIR or Public PAIR. Status information for unpublished applications is available through Private PAIR only. For more information about the PAIR system, see http://pair-direct.uspto.gov. Should you have questions on access to the Private PAIR system, contact the Electronic Business Center (EBC) at 866-217-9197 (toll-free). If you would like assistance from a USPTO Customer Service Representative or access to the automated information system, call 800-786-9199 (IN USA OR CANADA) or 571-272-1000.

/William C Doerrler/
Primary Examiner
Art Unit 3993

Conferees: /JLG/ /EDL/

Bibliographic Data

Application No: 90013915

Foreign Priority claimed: ○ Yes ◉ No

35 USC 119 (a-d) conditions met: ☐ Yes ☑ No | ☐ Met After Allowance

Verified and Acknowledged: /William Doerrler/ (Examiner's Signature) | (Initials)

Title: LOW PROFILE COMPACT TOOL CARRIERS

FILING or 371(c) DATE	CLASS	GROUP ART UNIT	ATTORNEY DOCKET NO.
02/28/2017 RULE	414	3993	Vermeer-386Reex

APPLICANTS

INVENTORS

9321386,

VERMEER MANUFACTURING COMPANY, PELLA, IA, UNITED STATES

THE TORO CAMPANY (3RD PTY REQ.), BLOOMINGTON, MN, UNITED STATES

CONTINUING DATA

This application is a REX of 14691649 04/21/2015 PAT 9321386

14691649 has PRO of 62118860 02/20/2015

FOREIGN APPLICATIONS

IF REQUIRED, FOREIGN LICENSE GRANTED**

STATE OR COUNTRY

ADDRESS

Patent Docket Department
Armstrong Teasdale LLP
7700 Forsyth Boulevard
Suite 1800
St. Louis, MO 63105
UNITED STATES

FILING FEE RECEIVED

$12,000

Reexamination	Application/Control No.	Applicant(s)/Patent Under Reexamination
	90013915	9321386
	Certificate Date	Certificate Number
		C1

Requester Correspondence Address: ☐ **Patent Owner** ☒ **Third Party**

James W. Miller
527 Marquette Avenue
Suite 1960, Rand Tower
Minneapolis, MN 55402

LITIGATION REVIEW ☒	/WCD/ (examiner initials)	03/24/2017 (date)
Case Name		Director Initials
Vermeer Corporation v. The Toro Company		
4:17cv76 US District court -Iowa Southern (open)		

COPENDING OFFICE PROCEEDINGS	
TYPE OF PROCEEDING	**NUMBER**
1. None	

SCORE Placeholder Sheet for IFW Content

Application Number: 90013915 Document Date: 01/25/2018

The presence of this form in the IFW record indicates that the following document type was received in electronic format on the date identified above. This content is stored in the SCORE database.

Since this was an electronic submission, there is no physical artifact folder, no artifact folder is recorded in PALM, and no paper documents or physical media exist. The TIFF images in the IFW record were created from the original documents that are stored in SCORE.

- Drawing

At the time of document entry (noted above):

- USPTO employees may access SCORE content via eDAN using the Supplemental Content tab, or via the SCORE web page.
- External customers may access SCORE content via PAIR using the Supplemental Content tab.

Form Revision Date: August 26, 2013

IN THE UNITED STATES PATENT AND TRADEMARK OFFICE

U.S. Patent No. 9,321,386
Inventors: Brad Thomas et al. Art Unit: 3993
Reexamination Control No.: 90/013,915
Filed: February 28, 2017
Confirmation No.: 3754
For: LOW PROFILE COMPACT TOOL CARRIERS
Examiner: William Charles Doerrler
Conferees: Jeffrey Gellner and Gay Spahn

January 25, 2018

AMENDMENT AND RESPONSE TO FINAL OFFICE ACTION

TO THE COMMISSIONER FOR PATENTS,

SIR:

Please enter the following amendments and consider the following remarks in the above-identified *ex parte* reexamination of U.S. Patent No. 9,321,386:

Amendments to the Claims begin on page 2;

Amendments to the Specification begin on page 16;

Amendments to the Drawings begin on page 18; and

Remarks begin on page 19.

AMENDMENTS TO THE CLAIMS

Please amend claim 15 as follows:

15. (Amended) A compact tool carrier comprising:

a loader adapted to carry a tool;

a mainframe for supporting the loader, the mainframe having a first side and a second side, and having a front end and a rear end relative to the longitudinal axis, the mainframe comprising an engine bracket that extends from the first side toward the second side for mounting an engine to the mainframe, the engine bracket being spaced from the rear end of the mainframe, each side having a top and a bottom, the first side of the mainframe having at least two pivot points relative to the loader, the loader not being directly attached to the mainframe;

a linkage pivotally attached to the first side of the mainframe at a pivot point and pivotally attached to the loader;

an actuator pivotally attached to the first side of the mainframe at a pivot point and pivotally attached to the loader;

a drive mechanism comprising tracks or wheels for propelling the compact tool carrier over a supporting surface, the drive mechanism being attached to the mainframe about a rotational axis, the compact tool carrier having a bottom at which the drive mechanism contacts the supporting surface, the rotational axis and bottom of the compact tool carrier being separated by a vertical distance D1, <u>the rotational axis and the bottom of the first side of the mainframe being separated by a vertical distance D5,</u> the rotational axis and <u>the</u> [each] pivot point <u>at which the linkage is attached to the mainframe</u> being separated by a vertical distance <u>D2, the rotational axis and the pivot point at which the actuator is attached to the mainframe being separated by a vertical distance D4</u>, [each vertical distance between the rotational axis and a pivot point] <u>D2 and D4 each</u> being less than 1.5 times D1 <u>and each being less than twice D5</u>; and

a control station having operator controls for propelling the compact tool carrier forward and for raising and/or lowering the loader, the control station being mounted toward the rear of the compact tool carrier and adapted to allow for standing or walk-behind operation.

Please cancel claim 16.

Please amend claim 17 as follows:

17. (Amended) The compact tool carrier as set forth in claim 15 [16] wherein the second side of the mainframe comprises two pivot points, each vertical distance between the rotational axis and a pivot point being less than 1.5 times D1.

Please cancel claim 18.

Please amend claim 19 as follows:

19. (Amended) The compact tool carrier as set forth in claim 15 [18] wherein the first side of the mainframe comprises a top most pivot point, the top most pivot point and the top of the first side of the mainframe being separated by a vertical distance D6, D6 being less than about 1.5 times D5.

Please insert new claims 21-63:

21. (New) The compact tool carrier as set forth in claim 1 wherein the linkage is a first linkage, the first linkage being pivotally attached to the first side of the mainframe at a first pivot point and pivotally attached to the loader arm at a second pivot point, the

actuator being attached to the mainframe at a third pivot point and pivotally attached to the loader arm at a fourth pivot point, the compact tool carrier further comprising a second linkage pivotally attached to the first side of the mainframe at a fifth pivot point and pivotally attached to the loader arm at a sixth pivot point, wherein as the loader travels from a down position to a vertically raised position, the first, second, third, fourth, fifth, and sixth pivot points are (1) disposed between the operator controls and a bottom of the mainframe and/or (2) disposed forward of the control station.

22. (New) The compact tool carrier as set forth in claim 21 further comprising an operator platform for standing operation of the operator controls of the control station, the operator platform being located toward a rear of the compact tool carrier such that the first pivot point, third pivot point, and fifth pivot point are disposed forward of the operator platform.

23. (New) The compact tool carrier as set forth in claim 15 wherein D2 and D4 are each less than 1.75 D5.

24. (New) The compact tool carrier as set forth in claim 15 wherein D2 and D4 are each less than 1.5 D5.

25. (New) The compact tool carrier as set forth in claim 15 wherein D2 and D4 are each less than D1.

26. (New) The compact tool carrier as set forth in claim 15 wherein D2 and D4 are each less than 0.75 D1.

27. (New) The compact tool carrier as set forth in claim 15 wherein the linkage is a first linkage, the compact tool carrier further comprising a second linkage pivotally attached to the first side of the mainframe at a pivot point and pivotally attached to the loader, the rotational axis and the pivot point at which the second linkage is attached to the mainframe being separated by a vertical distance D3, D3 being less than 1.5 times D1.

28. (New) The compact tool carrier as set forth in claim 15 wherein the linkage is a first linkage, the compact tool carrier further comprising a second linkage pivotally attached to the first side of the mainframe at a pivot point and pivotally attached to the loader, wherein the mainframe comprises a forward-most pivot point with (1) the pivot point at which the first linkage is attached to the mainframe, (2) the pivot point at which the actuator is attached to the mainframe, or (3) the pivot point at which the second linkage is attached to the mainframe being the forward-most pivot point, a vertical distance between the rotational axis and the forward-most pivot point being less than D1.

29. (New) The compact tool carrier as set forth in claim 15 wherein the linkage is a first linkage, the compact tool carrier further comprising a second linkage pivotally attached to the first side of the mainframe at a pivot point and pivotally attached to the loader, wherein the mainframe comprises a forward-most pivot point with (1) the pivot point at which the first linkage is attached to the mainframe, (2) the pivot point at which the actuator is attached to the mainframe, or (3) the pivot point at which the second linkage is attached to the mainframe being the forward-most pivot point, a vertical distance between the rotational axis and the forward-most pivot point being less than 0.75 D1.

30. (New) The compact tool carrier as set forth in claim 15 wherein the linkage is a first linkage, the compact tool carrier further comprising a second linkage pivotally attached to the first side of the mainframe at a pivot point and pivotally attached to the loader, wherein the mainframe comprises a forward-most pivot point with (1) the pivot point at which the first linkage is attached to the mainframe, (2) the pivot point at which the actuator is attached to the mainframe, or (3) the pivot point at which the second linkage is attached to the mainframe being the forward-most pivot point, a vertical distance between the rotational axis and the forward-most pivot point being less than 1.5 D5.

31. (New) A compact tool carrier configured for standing or walk-behind operator control and having a longitudinal axis and a mass of less than about 1500 kg, the compact tool carrier comprising:

a loader adapted to carry a tool, the loader being moveable between a down position and a vertically raised position, the loader comprising:

a first loader arm;

a second loader arm; and

at least one cross-member that extends from the first loader arm to the second loader arm;

a mainframe for supporting the loader, the mainframe having a first side and a second side, and having a front end and a rear end relative to the longitudinal axis, the mainframe comprising an engine bracket that extends from the first side toward the second side for mounting an engine to the mainframe, the engine bracket being spaced from the rear end of the mainframe, the first loader arm not being directly attached to the mainframe;

a linkage pivotally attached to the first side of the mainframe and pivotally attached to the first loader arm;

an actuator pivotally attached to the first side of the mainframe and pivotally attached to the first loader arm;

a control station having operator controls for propelling the compact tool carrier forward and for raising and lowering the loader, the control station being mounted toward the rear of the compact tool carrier and adapted to allow for standing operation, each cross-member being disposed forward of the control station in the vertically raised position of the loader; and

an operator platform for standing operation of the operator controls of the control station.

32. (New) The compact tool carrier as set forth in claim 31 wherein the linkage is a first linkage, the compact tool carrier further comprising a second linkage pivotally attached to the first side of the mainframe and pivotally attached to the first loader arm.

33. (New) The compact tool carrier as set forth in claim 31 wherein the mainframe incorporates a single weldment.

34. (New) The compact tool carrier as set forth in claim 31 wherein each cross-member is disposed forward of the operator platform and forward of the control station in the down position of the loader.

35. (New) The compact tool carrier as set forth in claim 31 further comprising an attachment plate for removably attaching a tool to the compact tool carrier, the cross-member being spaced from the attachment plate.

36. (New) The compact tool carrier as set forth in claim 35 further comprising an actuator for tilting of tools connected to the attachment plate, the actuator being connected to the cross-member and the attachment plate.

37. (New) The compact tool carrier as set forth in claim 31 further comprising a drive mechanism for propelling the compact tool carrier over a supporting surface, the drive mechanism having a drive sprocket, the cross-member being disposed forward of the drive sprocket in the vertically raised position and the down position.

38. (New) A compact tool carrier configured for standing or walk-behind operator control and having a longitudinal axis and a mass of less than about 1500 kg, the compact tool carrier comprising:

a loader being adapted to carry a tool, the loader comprising:

a first loader arm;

a second loader arm; and

a single cross-member that extends from the first loader arm to the second loader arm;

a mainframe for supporting the loader, the mainframe having a first side and a second side, and having a front end and a rear end relative to the longitudinal axis, the mainframe comprising an engine bracket that extends from the first side toward the second side for mounting an engine to the mainframe, the engine bracket being spaced from the rear of the mainframe, the first loader arm not being directly attached to the mainframe;

a linkage pivotally attached to the first side of the mainframe and pivotally attached to the first loader arm;

an actuator pivotally attached to the first side of the mainframe and pivotally attached to the first loader arm;

a control station having operator controls for propelling the compact tool carrier forward and for raising and lowering the loader, the control station being mounted toward the rear of the compact tool carrier and adapted to allow for standing operation; and

an operator platform for standing operation of the operator controls of the control station.

39. (New) The compact tool carrier as set forth in claim 38 wherein the loader is moveable between a down position and a vertically raised position, the cross-member being disposed forward of the operator platform in the down position and the vertically raised position of the loader.

40. (New) The compact tool carrier as set forth in claim 38 wherein the loader is moveable between a down position and a vertically raised position, the compact tool carrier further comprising a drive mechanism for propelling the compact tool carrier over a supporting surface, the drive mechanism having a drive sprocket, the cross-member

being disposed forward of the drive sprocket in the down position and the vertically raised position of the loader.

41. (New) The compact tool carrier as set forth in claim 38 wherein the linkage is a first linkage, the compact tool carrier further comprising a second linkage pivotally attached to the first side of the mainframe and pivotally attached to the first loader arm.

42. (New) The compact tool carrier as set forth in claim 38 wherein the mainframe incorporates a single weldment.

43. (New) The compact tool carrier as set forth in claim 38 further comprising an attachment plate for removably attaching a tool to the compact tool carrier, the cross-member being spaced from the attachment plate.

44. (New) The compact tool carrier as set forth in claim 43 further comprising an actuator for tilting of tools connected to the attachment plate, the actuator being connected to the cross-member and the attachment plate.

45. (New) A compact tool carrier configured for standing or walk-behind operator control and having a longitudinal axis and a mass of less than about 1500 kg, the compact tool carrier comprising:

a loader having an arm, the loader being adapted to carry a tool;

a mainframe for supporting the loader, the mainframe having a first side and a second side, and having a front end and a rear end relative to the longitudinal axis, the mainframe comprising an engine bracket that extends from the first side toward the second side for mounting an engine to the mainframe, the engine bracket being spaced from the rear of the mainframe, the loader arm not being directly attached to the mainframe;

a first linkage pivotally attached to the first side of the mainframe and pivotally attached to the loader arm at a first linkage pivot point;

a second linkage pivotally attached to the first side of the mainframe and pivotally attached to the loader arm at a second linkage pivot point, the loader being free of cross-members between the first linkage pivot point and the second linkage pivot point;

an actuator pivotally attached to the first side of the mainframe and pivotally attached to the loader arm at an actuator pivot point;

a control station having operator controls for propelling the compact tool carrier forward and for raising and lowering the loader, the control station being mounted toward the rear of the compact tool carrier and adapted to allow for standing or walk-behind operation; and

an operator platform for standing operation of the operator controls of the control station.

46. (New) The compact tool carrier as set forth in claim 45 wherein the loader comprises:

a first arm;

a second arm; and

a cross-member that extends from the first arm to the second arm, the cross-member being disposed forward of the first linkage pivot point, the second linkage pivot point, and the actuator pivot point.

47. (New) The compact tool carrier as set forth in claim 46 further comprising an attachment plate for removably attaching a tool to the compact tool carrier, the cross-member being spaced from the attachment plate.

48. (New) The compact tool carrier as set forth in claim 47 further comprising an actuator for tilting of tools connected to the attachment plate, the actuator being connected to the cross-member and the attachment plate.

49. (New) The compact tool carrier as set forth in claim 45 wherein the mainframe incorporates a single weldment.

50. (New) A compact tool carrier configured for standing or walk-behind operator control and having a longitudinal axis and a mass of less than about 1500 kg, the compact tool carrier comprising:

a loader adapted to carry a tool, the loader comprising:

a first loader arm;

a second loader arm; and

at least one cross-member that extends from the first loader arm to the second loader arm;

a mainframe for supporting the loader, the mainframe having a first side and a second side, and having a front end and a rear end relative to the longitudinal axis, the mainframe comprising an engine bracket that extends from the first side toward the second side for mounting an engine to the mainframe, the engine bracket being spaced from the rear end of the mainframe, the first loader arm not being directly attached to the mainframe;

a first linkage pivotally attached to the first side of the mainframe and pivotally attached to the first loader arm at a first linkage pivot point;

a second linkage pivotally attached to the first side of the mainframe and pivotally attached to the first loader arm at a second linkage pivot point, each cross-member being disposed forward of the first linkage pivot point and the second linkage pivot point;

an actuator pivotally attached to the first side of the mainframe and pivotally attached to the first loader arm at an actuator pivot point;

a control station having operator controls for propelling the compact tool carrier forward and for raising and lowering the loader, the control station being mounted

toward the rear of the compact tool carrier and adapted to allow for standing or walk-behind operation; and

an operator platform for standing operation of the operator controls of the control station.

51. (New) The compact tool carrier as set forth in claim 50 wherein each cross-member is disposed forward of the actuator pivot point.

52. (New) The compact tool carrier as set forth in claim 50 wherein the mainframe incorporates a single weldment.

53. (New) The compact tool carrier as set forth in claim 50 further comprising an attachment plate for removably attaching a tool to the compact tool carrier, the cross-member being spaced from the attachment plate.

54. (New) The compact tool carrier as set forth in claim 53 further comprising an actuator for tilting of tools connected to the attachment plate, the actuator being connected to the cross-member and the attachment plate.

55. (New) A compact tool carrier configured for standing or walk-behind operator control and having a longitudinal axis and a mass of less than about 1500 kg, the compact tool carrier comprising:

a loader having an arm, the loader being adapted to carry a tool;

a mainframe for supporting the loader, the mainframe having a first side and a second side, and having a front end and a rear end relative to the longitudinal axis, the mainframe comprising an engine bracket that extends from the first side toward the second side for mounting an engine to the mainframe, the engine bracket being spaced from the rear end of the mainframe, each side having a top and a bottom, the first side of the mainframe having at least two pivot points relative to the loader, the loader arm not being directly attached to the mainframe;

a linkage pivotally attached to the first side of the mainframe and pivotally attached to the loader arm;

an actuator pivotally attached to the first side of the mainframe and pivotally attached to the loader arm;

a drive mechanism comprising tracks for propelling the compact tool carrier over a supporting surface, the drive mechanism having a rotational axis, the compact tool carrier having a bottom at which the drive mechanism contacts the supporting surface, the rotational axis and bottom of the compact tool carrier being separated by a vertical distance D1, the rotational axis and the bottom of the first side of the mainframe being separated by a vertical distance D5, the rotational axis and the pivot point at which the linkage is attached to the mainframe being separated by a vertical distance D2, the rotational axis and the pivot point at which the actuator is attached to the mainframe being separated by a vertical distance D4, both D2 and D4 being less than D1 and being less than 1.5 D5; and

a control station having operator controls for propelling the compact tool carrier forward and for raising and lowering the loader, the control station being mounted toward the rear of the compact tool carrier and adapted to allow for standing or walk-behind operation.

56. (New) The compact tool carrier as set forth in claim 55 wherein D2 and D4 are each less than 0.75 D1.

57. (New) The compact tool carrier as set forth in claim 55 wherein the linkage is a first linkage, the compact tool carrier further comprising a second linkage pivotally attached to the first side of the mainframe at a pivot point and pivotally attached to the loader, the rotational axis and the pivot point at which the second linkage is attached to the mainframe being separated by a vertical distance D3, D3 being less than 1.5 times D1.

58. (New) The compact tool carrier as set forth in claim 55 wherein the linkage is a first linkage, the compact tool carrier further comprising a second linkage pivotally

attached to the first side of the mainframe at a pivot point and pivotally attached to the loader, wherein the mainframe comprises a forward-most pivot point with (1) the pivot point at which the first linkage is attached to the mainframe, (2) the pivot point at which the actuator is attached to the mainframe, or (3) the pivot point at which the second linkage is attached to the mainframe being the forward-most pivot point, a vertical distance between the rotational axis and the forward-most pivot point being less than D1.

59. (New) The compact tool carrier as set forth in claim 55 wherein the linkage is a first linkage, the compact tool carrier further comprising a second linkage pivotally attached to the first side of the mainframe at a pivot point and pivotally attached to the loader, wherein the mainframe comprises a forward-most pivot point with (1) the pivot point at which the first linkage is attached to the mainframe, (2) the pivot point at which the actuator is attached to the mainframe, or (3) the pivot point at which the second linkage is attached to the mainframe being the forward-most pivot point, a vertical distance between the rotational axis and the forward-most pivot point being less than 0.75 D1.

60. (New) The compact tool carrier as set forth in claim 55 wherein the linkage is a first linkage, the compact tool carrier further comprising a second linkage pivotally attached to the first side of the mainframe at a pivot point and pivotally attached to the loader, wherein the mainframe comprises a forward-most pivot point with (1) the pivot point at which the first linkage is attached to the mainframe, (2) the pivot point at which the actuator is attached to the mainframe, or (3) the pivot point at which the second linkage is attached to the mainframe being the forward-most pivot point, a vertical distance between the rotational axis and the forward-most pivot point being less than 0.75 D5.

61. (New) The compact tool carrier as set forth in claim 55 wherein the drive mechanism comprises a drive sprocket, the drive sprocket rotating about the rotational axis.

62. (New) The compact tool carrier as set forth in claim 55 further comprising an operator platform for standing operation of the operator controls of the control station.

63. (New) The compact tool carrier as set forth in claim 55 wherein the mainframe incorporates a single weldment.

AMENDMENTS TO THE SPECIFICATION

Please replace the paragraph that begins at column 2, line 44 with the following paragraph:

An embodiment of a compact tool carrier is generally referred as “5” in FIG. 1. The compact tool carrier 5 includes a loader 8 supported by a mainframe 10. The loader 8 includes an attachment plate 12 for interchangeably attaching any one of a number of tools (not shown). In this regard, such interchangeable tools do not form part of the compact tool carrier 5 unless stated otherwise. The attachment plate 12 is connected to an actuator 14 for tilting of tools connected to the attachment plate 12. The loader 8 has a first arm 15a and a second arm 15b generally opposite the first arm 15a. A cross-member 16 extends from the first arm 15a to the second arm 15b. The actuator 14 is connected to the cross-member 16. Each arm 15a, 15b may be a single weldment or may include various components attached by fasteners (e.g., nuts and bolts). The first and second arms 15a, 15b each include a bracket portion 17a, 17b (FIG. 1) for fastening various linkages.

Please replace the paragraph that begins at column 3, line 20 with the following paragraph:

The compact tool carrier 5 includes a drive mechanism 18 attached to the mainframe 10. In the illustrated embodiment, the drive mechanism 18 is directly mounted (i.e., connected without intermediary parts) to the mainframe 10 by way of drive sprocket 22 connected to a hub 26 (FIG. 2). The hub 26 is attached to a shaft (not shown) that extends through a drive opening 30 (FIG. 4) of the mainframe 10. The sprocket 22, hub 26 and shaft (not shown) rotate about a rotational axis R (FIG. 5). As shown, the drive mechanism 18 includes tracks 34. In other embodiments, the drive mechanism 18 [10] includes wheels.

Please replace the paragraph that begins at column 4, line 35 with the following paragraph:

An actuator 54, shown as a hydraulic cylinder, is attached to the first side 38a of the mainframe 10 at its center pivot point $\underline{P_2}$ [P_4] and is attached to the loader arm 15a at its center pivot point P_5 to raise the loader 8. The compact tool carrier 5 may include a single actuator 54, or, as in other embodiments, a second actuator (not shown) is connected to the second side 38b (FIG. 4) of the mainframe 10 and the second arm 15b (FIG. 1). The actuator 54 is powered to raise the loader 8 and, in some embodiments, is also powered to lower the loader 8 (as opposed to a one-way actuator lowered by gravity alone).

Please replace the paragraph that begins at column 5, line 4 with the following paragraph:

In some embodiments, the mainframe 10 is characterized by a relatively low profile (i.e., the pivot points are positioned relatively low on the mainframe allowing its height to be reduced). The rotational axis R (FIG. 5) and the bottom of the compact tool carrier 5 (FIG. 2) are separated by a distance D1. Generally, the bottom of the compact tool carrier 5 corresponds to the point at which the drive mechanism 18 contacts the surface supporting the compact tool carrier 5. The rotational axis R and the forward pivot point P_1 of the first side 38a of the mainframe 10 are separated by a vertical distance D2. The rotational axis R and the rear pivot point P_3 are separated by a vertical distance D3. The rotational axis R and the central pivot point $\underline{P_2}$ [P_4] are separated by a vertical distance D4. Each of D2, D3 and D4 is less than about 1.5 times D1 (1.5xD1). In some embodiments, each of D2, D3 and D4 is less than D1 or even less than about 0.75 times D1 (0.75xD1).

AMENDMENTS TO THE DRAWINGS

Please amend drawing sheets 1/7-3/7 as shown in Annotated Sheets 1/7-3/7 that are included with this response.

REMARKS

The final Office action of January 12, 2018 has been carefully reviewed and the following remarks are made in response.

Status of Claims

Original claims 1, 3-13, 15, 17 and 19-20[1] of U.S. Patent No. 9,321,386 ("the '386 Patent") and new claims 21-63 are subject to reexamination. Original claims 15, 17, 19 of the '386 Patent are amended and claims 16 and 18 are cancelled. Claims 21-63 are added. Claims 1-15, 17 and 19-63 are pending with claims 1, 3-13, 15, 17 and 19-63 being subject to examination in this reexamination proceeding. Claims 2 and 14 of the '386 Patent are not subject to the reexamination proceeding.

No new matter has been added. In particular, none of the amendments or new claims broadens the claim scope beyond the claims of the original patent. Each of the new independent claims incorporates each and every element of original claim 1 of the '386 Patent and therefore is not broader than original patent claim 1.

The amendments to the claims, specification, and drawings set forth herein are the same as those previously set forth in Patent Owner's response dated October 25, 2017.

As submitted in Patent Owner's response dated October 25, 2017, support for the amendments and added claims can be found throughout the specification of the '386 Patent. In particular, support for the amendment to claim 15 and for new claims 23-24 may be found at column 5, lines 11-17 and 20-31 and Figure 5 of the '386 patent. Claims 17 and 19 are amended to change their claim dependencies. Support for new claim 21 may be found at column 4, lines 14-32 and Figures 1 and 3. Support for new claim 22 may be found at column 3, lines 46-47; column 4, lines 14-32; and Figures 1 and 3. Support for new claims 25 and 26 may be found at column 4, lines 17-19.

---

[1] The Office states on page 4 of the Office action that because the Patent Owner amended claim 19, claim 19 is now subject to reexamination.

Support for new claims 27-29 may be found at column 4, lines 25-31; column 5, lines 11-19; and Figure 5. Support for new claim 30 may be found at column 4, lines 25-31; column 5, lines 11-17 and 23-25; and Figure 5.

Support for new independent claims 31, 38, 45 and 50 and dependent claims 34, 39, 46 and 51 may be found at least at Figures 1-3 which show the location of the loader cross-member relative to the control station and relative to the pivot points that are formed in the loader. Possession of an invention may be shown "by disclosure of drawings . . . that are sufficiently detailed to show that applicant was in possession of the claimed invention as a whole." MPEP §2163(II)(A)(3)(a). Support for the operator platform recited in independent claims 31, 38, 45 and 50 may be found at column 3, lines 46-47 and Figure 3.

Support for new claims 32 and 41 may be found at column 4, lines 25-31 of the '386 Patent. Support for new claims 33, 42, 49, 52 and 63 may be found at column 4, lines 4-8. Support for new claims 35-36, 43-44, 47-48 and 53-54 may be found at column 2, lines 46-52 and Figures 1-3. Support for claim 37 and 40 may be found at column 3, lines 20-28 and Figures 1-3.

Support for new claims 55-56 may be found at column 5, lines 17-25. Support for new claims 57-60 may be found at column 4, lines 25-31; column 5, lines 11-19; and Figure 5. Support for new claims 61-62 may be found at column 3, lines 20-28.

The Patent Owner has amended the paragraph that begins at column 2, line 44 of the '386 Patent to further recite:

> A cross-member 16 extends from the first arm 15 to the second arm 15b. The actuator 14 is connected to the cross-member 16.

Support for the amendment may be found, for example, in Figure 1 of the '386 Patent in which the cross-member is shown and in which the actuator 14 is shown as being connected to the cross-member. The drawings alone may provide written description to show that the Inventors were in possession of the subject matter (see the discussion above relating to claims 31, 34, 38-39, 45-46 and 50-51 and MPEP §2163.01 that states

that the test or analysis of the description requirement is the same for amendments to the specification and for amendment to the claims).

The Patent Owner has amended the paragraphs of the specification that begin on column 3, line 20; at column 4, line 35; and at column 5, line 4 of the '386 Patent to correct several typographical errors. Correction of these errors was requested by the Office in U.S. Patent Application No. 15/062,801 which is a continuation of the '386 Patent. Those of skill in the art consider these to be obvious errors and recognize the appropriate corrections set forth in the amendments. MPEP §2163.07(II). In particular, other portions of the specification refer to the "drive mechanism 18" (see e.g., col. 3, lines 20-28) and Figures 1-3 each refer to the drive mechanism by reference character "18." In addition, other portions of the specification refer to the central pivot point formed in the mainframe as "P_2" (see e.g., col. 4, lines 19-22) and the center pivot point is referenced as "P2" in Figures 1 and 5. The errors and their corrections are obvious to those of skill in the art and do not add new matter.

The Patent Owner has amended drawing sheets 1/7-3/7 by referring to the cross-member as "16".

Interview Summary

The Patent Owner's representative thanks the Examiner for the telephone interview on January 23, 2018. The Rejection under 35 U.S.C. §112 was discussed. The Patent Owner's representative agreed to present arguments relating to the rejection under 35 U.S.C. §112 for consideration by the Examiner.

Allowable Subject Matter

The patentability of claims 1, 3-13, 15, 17, 19 and 20 is confirmed. The Office states on page 6 of the Office action that claims 21-63 are patentable if rewritten to overcome the rejections under 35 U.S.C. §112(b). As discussed below, claims 21-63 comply with the definiteness requirement of 35 U.S.C. §112(b) and the rejection should be withdrawn.

Rejections under 35 U.S.C. §112(b)

Claims 31-63 are rejected under 35 U.S.C. §112(b) or 35 U.S.C. §112 (pre-AIA), second paragraph as allegedly indefinite. In particular, the Office has rejected independent claims 31, 38, 45, 50 and 55 under 35 U.S.C. §112(b) for being indefinite for recitation of "a mass of less than about 1500 kg." Claims 32-37, 39-44, 46-49, 51-54 and 56-63 are rejected by way of their dependency from independent claims 31, 38, 45, 50 and 55. The Office should withdraw the indefiniteness rejections because (1) claims 31-63 are definite and comply with 35 U.S.C. §112(b) and (2) a rejection under 35 U.S.C. §112 based on a recitation in the original claims of the '386 Patent in this reexamination proceeding is improper.

Claims 31-63 Comply with 35 U.S.C. §112(b)

The term "about" as recited in the recitation "a mass of less than about 1500 kg" in claims 31, 38, 45, 50 and 55 is definite because one of skill in the art understands the meaning of "a mass of less than about 1500 kg." The MPEP and caselaw make clear that terms of approximation are definite, particularly when the application provides guidance as to the meaning of such terms. MPEP §2173.05(b)(III). The '386 Patent states that the term "about", when used in conjunction with physical properties, is meant to include variations in measurement, such as variations from rounding, measurement methodology or other statistical variation:

> As used herein, the terms "about," "substantially," "essentially" and "approximately" when used in conjunction with ranges of dimensions, concentrations, temperatures or other physical or chemical properties or characteristics is meant to cover variations that may exist in the upper and/or lower limits of the ranges of the properties or characteristics, including, for example, variations resulting from rounding, measurement methodology or other statistical variation.

Column 6, lines 9-16 of the '386 Patent.

As further evidence of the meaning of the recitation of "a mass of less than about 1500 kg", the '386 Patent indicates that the recitation of "about 1500 kg" is intended to include, as an example of the statistical variations listed at column 6, lines 9-16, variation from rounding. The specification states that "compact tool carrier" refers to machines that

> are self-propelled and are capable of carrying interchangeable equipment and that generally have a mass (not including the interchangeable tool) of less than **about 1500 kg (about 3307 lb)**
>
> Column 2, lines 59-63 of the '386 Patent; Emphasis added.

One of skill in the art understands that conversion from one unit to another, such as the conversion between kilograms and pounds, is not capable of exact precision. For example, **1500 kilograms is 3306.93 pounds** while **3307 pounds is 1500.03 kilograms.** The variation caused by rounding when converting between kilograms and pounds is an example of the type of statistical variation the '386 Patent states the term "about" is intended to cover. Other statistical variations may result from the "measurement methodology" itself. Column 6, lines 15-16 of the '386 Patent.

The '386 Patent thus makes clear what the term "about" means, particularly when used in the recitation of "a mass of less than about 1500 kg". For at least these reasons claims 31, 38, 45, 50 and 55 as submitted in the October 25, 2017 Amendment are definite.

<u>The Rejection under 35 U.S.C. §112(b) is Improper in this Reexamination Proceeding</u>

The recitation of claims 31, 38, 45, 50 and 55 of "a mass of less than about 1500 kg" is also recited in original claim 1 of the '386 Patent (see column 6, lines 35-36 of the '386 Patent) which is not amended in this proceeding. As stated in MPEP §2258 which governs the scope of ex parte reexamination proceedings, "[i]f a limitation that appears in an existing patent claim also appears in a claim newly presented in a reexamination proceeding, that limitation cannot be examined as to 35 U.S.C. §112." Because the

recitation “a mass of less than about 1500 kg” of claims 31, 38, 45, 50 and 55 also appears in claim 1 of the ‘386 Patent, the recitation **cannot** be rejected by the Office under 35 U.S.C. §112(b).

As described above, the recitation of “a mass of less than about 1500 kg”, with the meaning described in the specification, is not indefinite as was suggested by the Office on page 5 of the Office action. The Office’s suggested meaning of that term as stated in the Office action is inconsistent with the specification. The Office should withdraw the indefiniteness rejections because the meaning of “a mass of less than about 1500 kg” is clear in view of the teaching of the specification and because an indefiniteness rejection based on a recitation in the original claims of the ‘386 Patent in this reexamination proceeding is improper.

Conclusion

The Patent Owner respectfully requests Issuance of an Ex Parte Reexamination Certificate confirming the patentability of claims 1, 3-13, 15, 17 and 19-63. The undersigned request a telephone call from the Examiner if a call might expedite issuance of the Certificate.

The Patent Owner authorizes the Commissioner to charge any fees which may be due in connection with this Amendment to Deposit Account No. 012384 in the name of Armstrong Teasdale LLP.

Respectfully submitted,

/Patrick E. Brennan/

Patrick E. Brennan
Reg. No. 56,511
Armstrong Teasdale LLP
7700 Forsyth Blvd, Suite 1800
St. Louis, Missouri 63105
(314) 621-5070

/Michael J. Vander Molen/

Michael J. Vander Molen
Reg. No. 57,274
ARMSTRONG TEASDALE LLP
7700 Forsyth Blvd., Suite 1800
St. Louis, Missouri 63105
(314) 621-5070

CERTIFICATE OF SERVICE

I certify that on January 25, 2018, the foregoing AMENDMENT AND RESPONSE TO FINAL OFFICE ACTION and ANNOTATED DRAWINGS were served on the third party requester's counsel via first class mail at:

James W. Miller
Registration No. 27,661
Suite 1960 Rand Tower
527 Marquette Avenue
Minneapolis, MN 55402

Respectfully submitted,

/Patrick E. Brennan/

Patrick E. Brennan
Reg. No. 56,511
ARMSTRONG TEASDALE LLP
7700 Forsyth Blvd., Suite 1800
St. Louis, MO 63105
(314) 621-5070

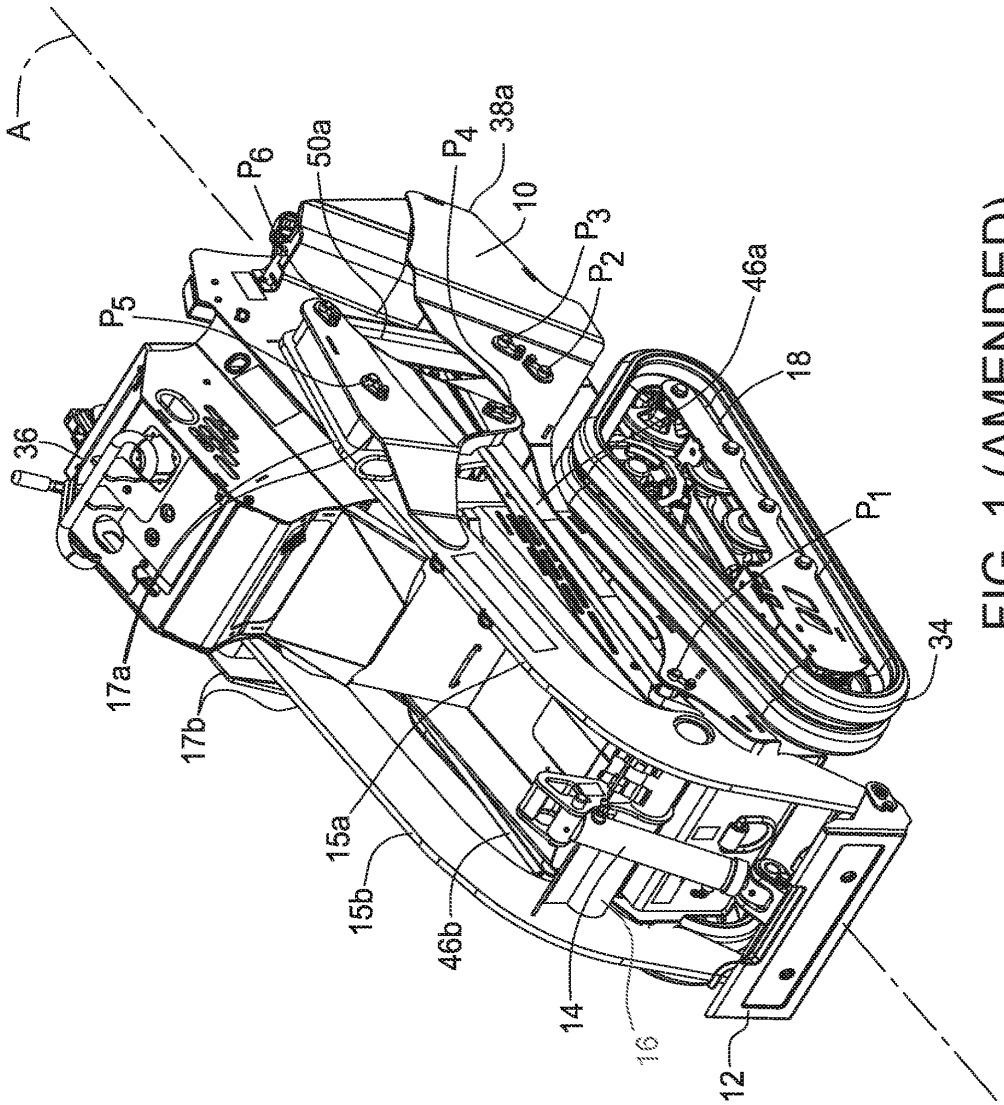

FIG. 1 (AMENDED)

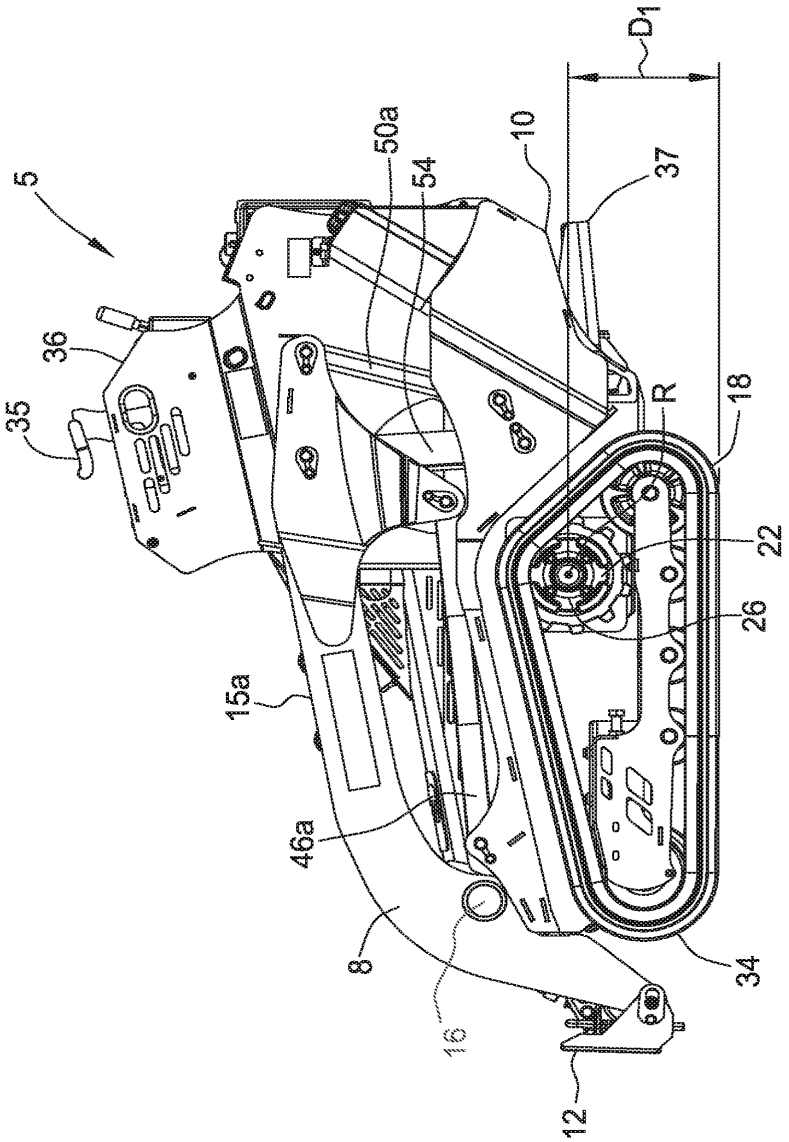

FIG. 2 (AMENDED)

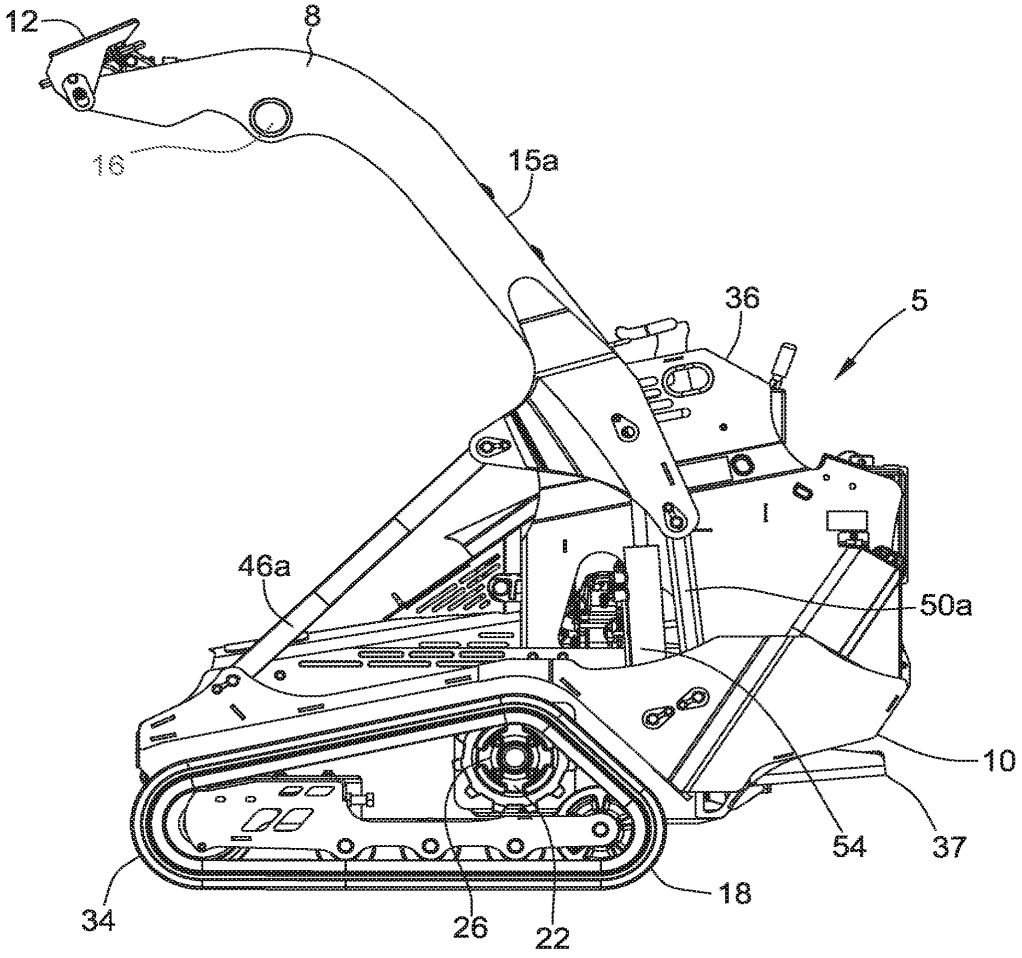

FIG. 3 (AMENDED)

UNITED STATES PATENT AND TRADEMARK OFFICE

UNITED STATES DEPARTMENT OF COMMERCE
United States Patent and Trademark Office
Address: COMMISSIONER FOR PATENTS
P.O. Box 1450
Alexandria, Virginia 22313-1450
www.uspto.gov

APPLICATION NO.	FILING DATE	FIRST NAMED INVENTOR	ATTORNEY DOCKET NO.	CONFIRMATION NO.
90/013,915	02/28/2017	9321386	Vermeer-386Reex	3754

76656 7590 01/12/2018
Patent Docket Department
Armstrong Teasdale LLP
7700 Forsyth Boulevard
Suite 1800
St. Louis, MO 63105

EXAMINER
DOERRLER, WILLIAM CHARLES

ART UNIT	PAPER NUMBER
3993	

MAIL DATE	DELIVERY MODE
01/12/2018	PAPER

Please find below and/or attached an Office communication concerning this application or proceeding.

The time period for reply, if any, is set in the attached communication.

PTOL-90A (Rev. 04/07)

UNITED STATES PATENT AND TRADEMARK OFFICE

Commissioner for Patents
United States Patent and Trademark Office
P.O. Box 1450
Alexandria, VA 22313-1450
www.uspto.gov

DO NOT USE IN PALM PRINTER

(THIRD PARTY REQUESTER'S CORRESPONDENCE ADDRESS)

James W. Miller, Attorney
527 Marquette Avenue
Suite 1960, Rand Tower
Minneapolis, MN 55402

EX PARTE REEXAMINATION COMMUNICATION TRANSMITTAL FORM

REEXAMINATION CONTROL NO. *90/013,915*.

PATENT NO. *9321386*.

ART UNIT *3993*.

Enclosed is a copy of the latest communication from the United States Patent and Trademark Office in the above identified *ex parte* reexamination proceeding (37 CFR 1.550(f)).

Where this copy is supplied after the reply by requester, 37 CFR 1.535, or the time for filing a reply has passed, no submission on behalf of the *ex parte* reexamination requester will be acknowledged or considered (37 CFR 1.550(g)).

/William C Doerrler/
Primary Examiner
Art Unit: 3993

PTOL-465 (Rev.07-04)

DETAILED ACTION

Notice of Pre-AIA or AIA Status

The present application, filed on or after March 16, 2013, is being examined under the first inventor to file provisions of the AIA.

Reexamination

In order to ensure full consideration of any amendments, affidavits or declarations, or other documents as evidence of patentability, such documents must be submitted in response to this Office action. Submissions after the next Office action, which is intended to be a final action, will be governed by the requirements of 37 CFR 1.116, after final rejection and 37 CFR 41.33 after appeal, which will be strictly enforced.

Extensions of time under 37 CFR 1.136(a) will not be permitted in these proceedings because the provisions of 37 CFR 1.136 apply only to "an applicant" and not to parties in a reexamination proceeding. Additionally, 35 U.S.C. 305 requires that reexamination proceedings "will be conducted with special dispatch" (37 CFR 1.550(a)). Extension of time in *ex parte* reexamination proceedings are provided for in 37 CFR 1.550(c).

The patent owner is reminded of the continuing responsibility under 37 CFR 1.565(a) to apprise the Office of any litigation activity, or other prior or concurrent proceeding, involving Patent No. 9,321,386 throughout the course of this reexamination

proceeding. The third party requester is also reminded of the ability to similarly apprise the Office of any such activity or proceeding throughout the course of this reexamination proceeding. See MPEP §§ 2207, 2282 and 2286.

Patent owner is notified that any proposed amendment to the specification and/or claims in this reexamination proceeding must comply with 37 CFR 1.530(d)-(j), must be formally presented pursuant to 37 CFR 1.52(a) and (b), and must contain any fees required by 37 CFR 1.20(c). See MPEP 2250 (IV) for examples to assist in the preparation of proper proposed amendments in reexamination proceedings.

After the filing of a request for reexamination by a third party requester, any document filed by either the patent owner or the third party requested must be served on the other party (or parties where two or more third party requested proceedings are merged) in the reexamination proceeding in the manner provided in 37 C.F.R. 1.248. See 37 C.F.R. 1.550(f).

Summary of the Proceeding to Date

The Third Party Requester requested reexamination of claims 1,3-13,15-18 and 20 of U.S. Patent No. 9,321,386 (hereinafter "the '386 patent) based upon the following proposed rejections:

1. Claims 1,3-13,15-18 and 20 of the '386 patent are unpatentable under 35 USC 103(a) as obvious over "S450TX Mini Skid Steer", published by Vermeer, copyright 2013 (hereinafter "Vermeer") in view of "Skid Steer Loaders, Radial & Vertical Lift" published by Mustang, copyright 2014 (hereinafter "Mustang");

2. Claims 1,3-13,15-18 and 20 of the '386 patent are unpatentable under 35 USC 103(a) as obvious over Vermeer in view of Mustang and further in view of "S450TX Mini Skid Steer Parts Manual" published by Vermeer, copyright 2012-2013 (hereinafter "Vermeer Parts Manual").

An order mailed April 7, 2017 found an SNQ based on Vermeer in view of Mustang and the Vermeer Parts Manual for claims 1,3-13,15-18 and 20. No SNQ was established for claims 2,14 and 19, so these claims will not be reexamined. Patent Owner (PO) waived the right to file a statement under 37 C.F.R. 1.530(b) on May 17, 2017. A non-final Office action was mailed August 25, 2017 which rejected claims 1,3-13,15-18 and 20 as obvious over Vermeer in view of Mustang and the Vermeer Parts Manual. After an October 16, 2017 interview, PO filed a response with an amendment to the specification and drawings and cancelling claims 16 and 18, amending claims 15,17 and 19 and adding new claims 21-63. Also submitted was a declaration of Louis Hartke. It is noted that since claim 19 has been amended, it is now considered part of this reexamination.

Drawings

The drawings were received on October 25, 2017. These drawings are acceptable.

Claim Rejections - 35 USC § 112

The following is a quotation of 35 U.S.C. 112(b):
(b) CONCLUSION.—The specification shall conclude with one or more claims particularly pointing out and distinctly claiming the subject matter which the inventor or a joint inventor regards as the invention.

The following is a quotation of 35 U.S.C. 112 (pre-AIA), second paragraph:
The specification shall conclude with one or more claims particularly pointing out and distinctly claiming the subject matter which the applicant regards as his invention.

Claims 31-63 are rejected under 35 U.S.C. 112(b) or 35 U.S.C. 112 (pre-AIA), second paragraph, as being indefinite for failing to particularly point out and distinctly

claim the subject matter which the inventor or a joint inventor, or for pre-AIA the applicant regards as the invention.

Claims 31,38,45,50 and 55 all claim the tool carrier has a “mass of less than about 1500kg”. This phrase is unclear. While “less than” is clear, “about” is ambiguous. Is 1550 about 1500? If applicant is taking “about” to mean within 5%, the claim would be clearer as –less than 1575 kg--. Applicant can further limit the mass in dependent claims if so desired. The other claims depend from one of claims 31,38,45,50 and 55, so they are unclear due to their dependency.

Response to Arguments

The actuator 14 connected to the cross-member 16 is seen to have support in the original drawings.

In regard to the 103 rejections, applicant’s arguments (as stated in both the remarks and Hartke declaration) that there would be no expectation of success from adding the lift mechanism of Mustang to the S450TX skid steer are persuasive. The rear cross member of the Mustang lift system could not be present on a smaller rear controlled skid steer, as it would inhibit access to the controls and be positioned where either the operator or the engine are located. It is further noted that the increase of lift capacity from using the claimed vertical lift (32% increase over the radial lift) was unexpected. It is further no longer considered obvious for an ordinary practitioner at the time of invention to combine the known compact S450TX with the much larger known vertical lift system of the Mustang reference as it was stated by the requester in US PG

Pub 2016/0244937, "While high lift loader arms are known on full size skid steer loaders as disclosed in U.S. Pat. No. 5,542,814, the use of such high lift loader arms on a compact utility loader has been considered difficult if not impossible due to size and durability constraints." The Hartke declaration describes some of these constraints.

Allowable Subject Matter

Claims 1,3-13,15,17,19 and 20 are allowed. (Claims 2 and 14 are not part of this reexamination)

Claims 21-63 would be allowable if rewritten or amended to overcome the rejection(s) under 35 U.S.C. 112(b) or 35 U.S.C. 112 (pre-AIA), 2nd paragraph, set forth in this Office action.

The reasons that the claims are now seen as allowable are discussed above in the response to applicant's arguments.

Applicant's amendment necessitated the new ground(s) of rejection presented in this Office action. Accordingly, **THIS ACTION IS MADE FINAL**. See MPEP § 706.07(a). Applicant is reminded of the extension of time policy as set forth in 37 CFR 1.136(a).

A shortened statutory period for reply to this final action is set to expire THREE MONTHS from the mailing date of this action. In the event a first reply is filed within TWO MONTHS of the mailing date of this final action and the advisory action is not mailed until after the end of the THREE-MONTH shortened statutory period, then the shortened statutory period will expire on the date the advisory action is mailed, and any

extension fee pursuant to 37 CFR 1.136(a) will be calculated from the mailing date of the advisory action. In no event, however, will the statutory period for reply expire later than SIX MONTHS from the date of this final action.

Any inquiry concerning this communication or earlier communications from the examiner should be directed to WILLIAM DOERRLER whose telephone number is (571)272-4807. The examiner can normally be reached on Monday-Friday 6-30- 4:30.

Examiner interviews are available via telephone, in-person, and video conferencing using a USPTO supplied web-based collaboration tool. To schedule an interview, applicant is encouraged to use the USPTO Automated Interview Request (AIR) at http://www.uspto.gov/interviewpractice.

If attempts to reach the examiner by telephone are unsuccessful, the examiner's supervisor, Eileen Lillis can be reached on (571) 272-6928. The fax phone number for the organization where this application or proceeding is assigned is 571-273-8300.

Information regarding the status of an application may be obtained from the Patent Application Information Retrieval (PAIR) system. Status information for published applications may be obtained from either Private PAIR or Public PAIR. Status information for unpublished applications is available through Private PAIR only. For more information about the PAIR system, see http://pair-direct.uspto.gov. Should you have questions on access to the Private PAIR system, contact the Electronic Business Center (EBC) at 866-217-9197 (toll-free). If you would like assistance from a

USPTO Customer Service Representative or access to the automated information

system, call 800-786-9199 (IN USA OR CANADA) or 571-272-1000.

/William C Doerrler/
Primary Examiner
Art Unit 3993

Conferees: /JLG/ and /GAS/

Office Action in Ex Parte Reexamination	Control No. 90/013,915	Patent Under Reexamination 9321386	
	Examiner WILLIAM DOERRLER	Art Unit 3993	AIA (First Inventor to File) Status Yes

-- The MAILING DATE of this communication appears on the cover sheet with the correspondence address --

a. ☒ Responsive to the communication(s) filed on *10-25-2017* .
☐ A declaration(s)/affidavit(s) under **37 CFR 1.130(b)** was/were filed on _____.

b. ☒ This action is made FINAL.

c. ☐ A statement under 37 CFR 1.530 has not been received from the patent owner.

A shortened statutory period for response to this action is set to expire *2* month(s) from the mailing date of this letter. Failure to respond within the period for response will result in termination of the proceeding and issuance of an *ex parte* reexamination certificate in accordance with this action. 37 CFR 1.550(d). **EXTENSIONS OF TIME ARE GOVERNED BY 37 CFR 1.550(c).** If the period for response specified above is less than thirty (30) days, a response within the statutory minimum of thirty (30) days will be considered timely.

Part I THE FOLLOWING ATTACHMENT(S) ARE PART OF THIS ACTION:

1. ☐ Notice of References Cited by Examiner, PTO-892.
2. ☐ Information Disclosure Statement, PTO/SB/08.
3. ☐ Interview Summary, PTO-474.
4. ☐ _____.

Part II SUMMARY OF ACTION

1a. ☒ Claims *1,3-13,15,17 and 19-63* are subject to reexamination.

1b. ☒ Claims *2 and 14* are not subject to reexamination.

2. ☒ Claims *16 and 18* have been canceled in the present reexamination proceeding.

3. ☒ Claims *1,3-13,15,17,19 and 20* are patentable and/or confirmed.

4. ☒ Claims *21-63* are rejected.

5. ☐ Claims _____ are objected to.

6. ☒ The drawings, filed on *25 October 2017* are acceptable.

7. ☐ The proposed drawing correction, filed on _____ has been (7a) ☐ approved (7b) ☐ disapproved.

8. ☐ Acknowledgment is made of the priority claim under 35 U.S.C. § 119(a)-(d) or (f).

a) ☐ All b) ☐ Some* c) ☐ None of the certified copies have

1 ☐ been received.

2 ☐ not been received.

3 ☐ been filed in Application No. _____ .

4 ☐ been filed in reexamination Control No. _____.

5 ☐ been received by the International Bureau in PCT application No. _____.

* See the attached detailed Office action for a list of the certified copies not received.

9. ☐ Since the proceeding appears to be in condition for issuance of an *ex parte* reexamination certificate except for formal matters, prosecution as to the merits is closed in accordance with the practice under *Ex parte* Quayle, 1935 C.D. 11, 453 O.G. 213.

10. ☐ Other: _____

cc: Requester (if third party requester)

CERTIFICATE OF SERVICE

I certify that on October 25, 2017, the foregoing AMENDMENT AND RESPONSE TO OFFICE ACTION, DECLARATION OF LOUIS HARTKE UNDER 37 C.F.R. 1.132, and ANNOTATED DRAWINGS were served on the third party requester's counsel via first class mail at:

James W. Miller
Registration No. 27,661
Suite 1960 Rand Tower
527 Marquette Avenue
Minneapolis, MN 55402

Respectfully submitted,

/Patrick E. Brennan/
Patrick E. Brennan
Reg. No. 56,511
ARMSTRONG TEASDALE LLP
7700 Forsyth Blvd., Suite 1800
St. Louis, MO 63105
(314) 621-5070

IN THE UNITED STATES PATENT AND TRADEMARK OFFICE

U.S. Patent No. 9,321,386
Inventors: Brad Thomas et al. Art Unit: 3993
Reexamination Control No.: 90/013,915
Filed: February 28, 2017
Confirmation No.: 3754
For: LOW PROFILE COMPACT TOOL CARRIERS
Examiner: William Charles Doerrler
Conferees: Jeffrey Gellner and Gay Spahn

October 25, 2017

AMENDMENT AND RESPONSE TO OFFICE ACTION

TO THE COMMISSIONER FOR PATENTS,

SIR:

Please enter the following amendments and consider the following remarks in the above-identified *ex parte* reexamination of U.S. Patent No. 9,321,386.

I. AMENDMENTS TO THE CLAIMS 1

II. AMENDMENTS TO THE SPECIFICATION 14

III. AMENDMENTS TO THE DRAWINGS 16

IV. REMARKS 17

A. EXECUTIVE SUMMARY 17

B. AMENDMENT SUMMARY 18

C. INTERVIEW SUMMARY 21

D. THE CITED REFERENCES DO NOT PRESENT A SUBSTANTIAL NEW QUESTION OF PATENTABILITY 21

E. REJECTIONS UNDER 35 U.S.C. §103 28

1. Claims 1, 3-13 and New Claims 21 and 22 are not Obvious 29

i. The Proposed Modification Renders the Prior Art Unsuitable for its Intended Purpose as the S450TX cannot Accommodate a Vertical Lift Loader 30

ii. There was no Expectation of Success in Making the Proposed Modification 34

iii. Objective Evidence of Non-obviousness 39

a. Unexpected Results 39

b. Long Felt Need and Attempts by Others 40

c. Commercial Success 44

2. Claims 15, 17 and 19 and New Claims 23-30 are not Obvious . 47

3. New Claims 31 to 63 are not Obvious 53

V. CONCLUSION 58

I. AMENDMENTS TO THE CLAIMS

Please amend claim 15 as follows:

15. (Amended) A compact tool carrier comprising:

a loader adapted to carry a tool;

a mainframe for supporting the loader, the mainframe having a first side and a second side, and having a front end and a rear end relative to the longitudinal axis, the mainframe comprising an engine bracket that extends from the first side toward the second side for mounting an engine to the mainframe, the engine bracket being spaced from the rear end of the mainframe, each side having a top and a bottom, the first side of the mainframe having at least two pivot points relative to the loader, the loader not being directly attached to the mainframe;

a linkage pivotally attached to the first side of the mainframe at a pivot point and pivotally attached to the loader;

an actuator pivotally attached to the first side of the mainframe at a pivot point and pivotally attached to the loader;

a drive mechanism comprising tracks or wheels for propelling the compact tool carrier over a supporting surface, the drive mechanism being attached to the mainframe about a rotational axis, the compact tool carrier having a bottom at which the drive mechanism contacts the supporting surface, the rotational axis and bottom of the compact tool carrier being separated by a vertical distance D1, <u>the rotational axis and the bottom of the first side of the mainframe being separated by a vertical distance D5,</u> the rotational axis and <u>the</u> [each] pivot point <u>at which the linkage is attached to the mainframe</u> being separated by a vertical distance <u>D2, the rotational axis and the pivot point at which the actuator is attached to the mainframe being separated by a vertical distance D4</u>, [each vertical distance between the rotational axis and a pivot point] <u>D2 and D4 each</u> being less than 1.5 times D1 <u>and each being less than twice D5</u>; and

a control station having operator controls for propelling the compact tool carrier forward and for raising and/or lowering the loader, the control station being mounted toward the rear of the compact tool carrier and adapted to allow for standing or walk-behind operation.

Please cancel claim 16.

Please amend claim 17 as follows:

17. (Amended) The compact tool carrier as set forth in claim 15 [16] wherein the second side of the mainframe comprises two pivot points, each vertical distance between the rotational axis and a pivot point being less than 1.5 times D1.

Please cancel claim 18.

Please amend claim 19 as follows:

19. (Amended) The compact tool carrier as set forth in claim 15 [18] wherein the first side of the mainframe comprises a top most pivot point, the top most pivot point and the top of the first side of the mainframe being separated by a vertical distance D6, D6 being less than about 1.5 times D5.

Please insert new claims 21-63:

21. The compact tool carrier as set forth in claim 1 wherein the linkage is a first linkage, the first linkage being pivotally attached to the first side of the mainframe at a first pivot point and pivotally attached to the loader arm at a second pivot point, the

actuator being attached to the mainframe at a third pivot point and pivotally attached to the loader arm at a fourth pivot point, the compact tool carrier further comprising a second linkage pivotally attached to the first side of the mainframe at a fifth pivot point and pivotally attached to the loader arm at a sixth pivot point, wherein as the loader travels from a down position to a vertically raised position, the first, second, third, fourth, fifth, and sixth pivot points are (1) disposed between the operator controls and a bottom of the mainframe and/or (2) disposed forward of the control station.

22. The compact tool carrier as set forth in claim 21 further comprising an operator platform for standing operation of the operator controls of the control station, the operator platform being located toward a rear of the compact tool carrier such that the first pivot point, third pivot point, and fifth pivot point are disposed forward of the operator platform.

23. The compact tool carrier as set forth in claim 15 wherein D2 and D4 are each less than 1.75 D5.

24. The compact tool carrier as set forth in claim 15 wherein D2 and D4 are each less than 1.5 D5.

25. The compact tool carrier as set forth in claim 15 wherein D2 and D4 are each less than D1.

26. The compact tool carrier as set forth in claim 15 wherein D2 and D4 are each less than 0.75 D1.

27. The compact tool carrier as set forth in claim 15 wherein the linkage is a first linkage, the compact tool carrier further comprising a second linkage pivotally attached to the first side of the mainframe at a pivot point and pivotally attached to the loader, the rotational axis and the pivot point at which the second linkage is attached to the mainframe being separated by a vertical distance D3, D3 being less than 1.5 times D1.

28. The compact tool carrier as set forth in claim 15 wherein the linkage is a first linkage, the compact tool carrier further comprising a second linkage pivotally attached

to the first side of the mainframe at a pivot point and pivotally attached to the loader, wherein the mainframe comprises a forward-most pivot point with (1) the pivot point at which the first linkage is attached to the mainframe, (2) the pivot point at which the actuator is attached to the mainframe, or (3) the pivot point at which the second linkage is attached to the mainframe being the forward-most pivot point, a vertical distance between the rotational axis and the forward-most pivot point being less than D1.

29. The compact tool carrier as set forth in claim 15 wherein the linkage is a first linkage, the compact tool carrier further comprising a second linkage pivotally attached to the first side of the mainframe at a pivot point and pivotally attached to the loader, wherein the mainframe comprises a forward-most pivot point with (1) the pivot point at which the first linkage is attached to the mainframe, (2) the pivot point at which the actuator is attached to the mainframe, or (3) the pivot point at which the second linkage is attached to the mainframe being the forward-most pivot point, a vertical distance between the rotational axis and the forward-most pivot point being less than 0.75 D1.

30. The compact tool carrier as set forth in claim 15 wherein the linkage is a first linkage, the compact tool carrier further comprising a second linkage pivotally attached to the first side of the mainframe at a pivot point and pivotally attached to the loader, wherein the mainframe comprises a forward-most pivot point with (1) the pivot point at which the first linkage is attached to the mainframe, (2) the pivot point at which the actuator is attached to the mainframe, or (3) the pivot point at which the second linkage is attached to the mainframe being the forward-most pivot point, a vertical distance between the rotational axis and the forward-most pivot point being less than 1.5 D5.

31. A compact tool carrier configured for standing or walk-behind operator control and having a longitudinal axis and a mass of less than about 1500 kg, the compact tool carrier comprising:

a loader adapted to carry a tool, the loader being moveable between a down position and a vertically raised position, the loader comprising:

a first loader arm;

a second loader arm; and

at least one cross-member that extends from the first loader arm to the second loader arm;

a mainframe for supporting the loader, the mainframe having a first side and a second side, and having a front end and a rear end relative to the longitudinal axis, the mainframe comprising an engine bracket that extends from the first side toward the second side for mounting an engine to the mainframe, the engine bracket being spaced from the rear end of the mainframe, the first loader arm not being directly attached to the mainframe;

a linkage pivotally attached to the first side of the mainframe and pivotally attached to the first loader arm;

an actuator pivotally attached to the first side of the mainframe and pivotally attached to the first loader arm;

a control station having operator controls for propelling the compact tool carrier forward and for raising and lowering the loader, the control station being mounted toward the rear of the compact tool carrier and adapted to allow for standing operation, each cross-member being disposed forward of the control station in the vertically raised position of the loader; and

an operator platform for standing operation of the operator controls of the control station.

32. The compact tool carrier as set forth in claim 31 wherein the linkage is a first linkage, the compact tool carrier further comprising a second linkage pivotally attached to the first side of the mainframe and pivotally attached to the first loader arm.

33. The compact tool carrier as set forth in claim 31 wherein the mainframe incorporates a single weldment.

34. The compact tool carrier as set forth in claim 31 wherein each cross-member is disposed forward of the operator platform and forward of the control station in the down position of the loader.

35. The compact tool carrier as set forth in claim 31 further comprising an attachment plate for removably attaching a tool to the compact tool carrier, the cross-member being spaced from the attachment plate.

36. The compact tool carrier as set forth in claim 35 further comprising an actuator for tilting of tools connected to the attachment plate, the actuator being connected to the cross-member and the attachment plate.

37. The compact tool carrier as set forth in claim 31 further comprising a drive mechanism for propelling the compact tool carrier over a supporting surface, the drive mechanism having a drive sprocket, the cross-member being disposed forward of the drive sprocket in the vertically raised position and the down position.

38. A compact tool carrier configured for standing or walk-behind operator control and having a longitudinal axis and a mass of less than about 1500 kg, the compact tool carrier comprising:

a loader being adapted to carry a tool, the loader comprising:

a first loader arm;

a second loader arm; and

a single cross-member that extends from the first loader arm to the second loader arm;

a mainframe for supporting the loader, the mainframe having a first side and a second side, and having a front end and a rear end relative to the longitudinal axis, the mainframe comprising an engine bracket that extends from the first side toward the second side for mounting an engine to the mainframe, the engine bracket being spaced

from the rear of the mainframe, the first loader arm not being directly attached to the mainframe;

a linkage pivotally attached to the first side of the mainframe and pivotally attached to the first loader arm;

an actuator pivotally attached to the first side of the mainframe and pivotally attached to the first loader arm;

a control station having operator controls for propelling the compact tool carrier forward and for raising and lowering the loader, the control station being mounted toward the rear of the compact tool carrier and adapted to allow for standing operation; and

an operator platform for standing operation of the operator controls of the control station.

39. The compact tool carrier as set forth in claim 38 wherein the loader is moveable between a down position and a vertically raised position, the cross-member being disposed forward of the operator platform in the down position and the vertically raised position of the loader.

40. The compact tool carrier as set forth in claim 38 wherein the loader is moveable between a down position and a vertically raised position, the compact tool carrier further comprising a drive mechanism for propelling the compact tool carrier over a supporting surface, the drive mechanism having a drive sprocket, the cross-member being disposed forward of the drive sprocket in the down position and the vertically raised position of the loader.

41. The compact tool carrier as set forth in claim 38 wherein the linkage is a first linkage, the compact tool carrier further comprising a second linkage pivotally attached to the first side of the mainframe and pivotally attached to the first loader arm.

42. The compact tool carrier as set forth in claim 38 wherein the mainframe incorporates a single weldment.

43. The compact tool carrier as set forth in claim 38 further comprising an attachment plate for removably attaching a tool to the compact tool carrier, the cross-member being spaced from the attachment plate.

44. The compact tool carrier as set forth in claim 43 further comprising an actuator for tilting of tools connected to the attachment plate, the actuator being connected to the cross-member and the attachment plate.

45. A compact tool carrier configured for standing or walk-behind operator control and having a longitudinal axis and a mass of less than about 1500 kg, the compact tool carrier comprising:

a loader having an arm, the loader being adapted to carry a tool;

a mainframe for supporting the loader, the mainframe having a first side and a second side, and having a front end and a rear end relative to the longitudinal axis, the mainframe comprising an engine bracket that extends from the first side toward the second side for mounting an engine to the mainframe, the engine bracket being spaced from the rear of the mainframe, the loader arm not being directly attached to the mainframe;

a first linkage pivotally attached to the first side of the mainframe and pivotally attached to the loader arm at a first linkage pivot point;

a second linkage pivotally attached to the first side of the mainframe and pivotally attached to the loader arm at a second linkage pivot point, the loader being free of cross-members between the first linkage pivot point and the second linkage pivot point;

an actuator pivotally attached to the first side of the mainframe and pivotally attached to the loader arm at an actuator pivot point;

a control station having operator controls for propelling the compact tool carrier forward and for raising and lowering the loader, the control station being mounted toward the rear of the compact tool carrier and adapted to allow for standing or walk-behind operation; and

an operator platform for standing operation of the operator controls of the control station.

46. The compact tool carrier as set forth in claim 45 wherein the loader comprises:

a first arm;

a second arm; and

a cross-member that extends from the first arm to the second arm, the cross-member being disposed forward of the first linkage pivot point, the second linkage pivot point, and the actuator pivot point.

47. The compact tool carrier as set forth in claim 46 further comprising an attachment plate for removably attaching a tool to the compact tool carrier, the cross-member being spaced from the attachment plate.

48. The compact tool carrier as set forth in claim 47 further comprising an actuator for tilting of tools connected to the attachment plate, the actuator being connected to the cross-member and the attachment plate.

49. The compact tool carrier as set forth in claim 45 wherein the mainframe incorporates a single weldment.

50. A compact tool carrier configured for standing or walk-behind operator control and having a longitudinal axis and a mass of less than about 1500 kg, the compact tool carrier comprising:

a loader adapted to carry a tool, the loader comprising:

a first loader arm;

a second loader arm; and

at least one cross-member that extends from the first loader arm to the second loader arm;

a mainframe for supporting the loader, the mainframe having a first side and a second side, and having a front end and a rear end relative to the longitudinal axis, the mainframe comprising an engine bracket that extends from the first side toward the second side for mounting an engine to the mainframe, the engine bracket being spaced from the rear end of the mainframe, the first loader arm not being directly attached to the mainframe;

a first linkage pivotally attached to the first side of the mainframe and pivotally attached to the first loader arm at a first linkage pivot point;

a second linkage pivotally attached to the first side of the mainframe and pivotally attached to the first loader arm at a second linkage pivot point, each cross-member being disposed forward of the first linkage pivot point and the second linkage pivot point;

an actuator pivotally attached to the first side of the mainframe and pivotally attached to the first loader arm at an actuator pivot point;

a control station having operator controls for propelling the compact tool carrier forward and for raising and lowering the loader, the control station being mounted toward the rear of the compact tool carrier and adapted to allow for standing or walk-behind operation; and

an operator platform for standing operation of the operator controls of the control station.

51. The compact tool carrier as set forth in claim 50 wherein each cross-member is disposed forward of the actuator pivot point.

52. The compact tool carrier as set forth in claim 50 wherein the mainframe incorporates a single weldment.

53. The compact tool carrier as set forth in claim 50 further comprising an attachment plate for removably attaching a tool to the compact tool carrier, the cross-member being spaced from the attachment plate.

54. The compact tool carrier as set forth in claim 53 further comprising an actuator for tilting of tools connected to the attachment plate, the actuator being connected to the cross-member and the attachment plate.

55. A compact tool carrier configured for standing or walk-behind operator control and having a longitudinal axis and a mass of less than about 1500 kg, the compact tool carrier comprising:

a loader having an arm, the loader being adapted to carry a tool;

a mainframe for supporting the loader, the mainframe having a first side and a second side, and having a front end and a rear end relative to the longitudinal axis, the mainframe comprising an engine bracket that extends from the first side toward the second side for mounting an engine to the mainframe, the engine bracket being spaced from the rear end of the mainframe, each side having a top and a bottom, the first side of the mainframe having at least two pivot points relative to the loader, the loader arm not being directly attached to the mainframe;

a linkage pivotally attached to the first side of the mainframe and pivotally attached to the loader arm;

an actuator pivotally attached to the first side of the mainframe and pivotally attached to the loader arm;

a drive mechanism comprising tracks for propelling the compact tool carrier over a supporting surface, the drive mechanism having a rotational axis, the compact tool carrier having a bottom at which the drive mechanism contacts the supporting surface, the rotational axis and bottom of the compact tool carrier being separated by a vertical distance D1, the rotational axis and the bottom of the first side of the mainframe being separated by a vertical distance D5, the rotational axis and the pivot point at which the

linkage is attached to the mainframe being separated by a vertical distance D2, the rotational axis and the pivot point at which the actuator is attached to the mainframe being separated by a vertical distance D4, both D2 and D4 being less than D1 and being less than 1.5 D5; and

a control station having operator controls for propelling the compact tool carrier forward and for raising and lowering the loader, the control station being mounted toward the rear of the compact tool carrier and adapted to allow for standing or walk-behind operation.

56. The compact tool carrier as set forth in claim 55 wherein D2 and D4 are each less than 0.75 D1.

57. The compact tool carrier as set forth in claim 55 wherein the linkage is a first linkage, the compact tool carrier further comprising a second linkage pivotally attached to the first side of the mainframe at a pivot point and pivotally attached to the loader, the rotational axis and the pivot point at which the second linkage is attached to the mainframe being separated by a vertical distance D3, D3 being less than 1.5 times D1.

58. The compact tool carrier as set forth in claim 55 wherein the linkage is a first linkage, the compact tool carrier further comprising a second linkage pivotally attached to the first side of the mainframe at a pivot point and pivotally attached to the loader, wherein the mainframe comprises a forward-most pivot point with (1) the pivot point at which the first linkage is attached to the mainframe, (2) the pivot point at which the actuator is attached to the mainframe, or (3) the pivot point at which the second linkage is attached to the mainframe being the forward-most pivot point, a vertical distance between the rotational axis and the forward-most pivot point being less than D1.

59. The compact tool carrier as set forth in claim 55 wherein the linkage is a first linkage, the compact tool carrier further comprising a second linkage pivotally attached to the first side of the mainframe at a pivot point and pivotally attached to the loader, wherein the mainframe comprises a forward-most pivot point with (1) the pivot point at which the first linkage is attached to the mainframe, (2) the pivot point at which the

actuator is attached to the mainframe, or (3) the pivot point at which the second linkage is attached to the mainframe being the forward-most pivot point, a vertical distance between the rotational axis and the forward-most pivot point being less than 0.75 D1.

60. The compact tool carrier as set forth in claim 55 wherein the linkage is a first linkage, the compact tool carrier further comprising a second linkage pivotally attached to the first side of the mainframe at a pivot point and pivotally attached to the loader, wherein the mainframe comprises a forward-most pivot point with (1) the pivot point at which the first linkage is attached to the mainframe, (2) the pivot point at which the actuator is attached to the mainframe, or (3) the pivot point at which the second linkage is attached to the mainframe being the forward-most pivot point, a vertical distance between the rotational axis and the forward-most pivot point being less than 0.75 D5.

61. The compact tool carrier as set forth in claim 55 wherein the drive mechanism comprises a drive sprocket, the drive sprocket rotating about the rotational axis.

62. The compact tool carrier as set forth in claim 55 further comprising an operator platform for standing operation of the operator controls of the control station.

63. The compact tool carrier as set forth in claim 55 wherein the mainframe incorporates a single weldment.

II. AMENDMENTS TO THE SPECIFICATION

Please replace the paragraph that begins at column 2, line 44 with the following paragraph:

An embodiment of a compact tool carrier is generally referred as “5” in FIG. 1. The compact tool carrier 5 includes a loader 8 supported by a mainframe 10. The loader 8 includes an attachment plate 12 for interchangeably attaching any one of a number of tools (not shown). In this regard, such interchangeable tools do not form part of the compact tool carrier 5 unless stated otherwise. The attachment plate 12 is connected to an actuator 14 for tilting of tools connected to the attachment plate 12. The loader 8 has a first arm 15a and a second arm 15b generally opposite the first arm 15a. A cross-member 16 extends from the first arm 15a to the second arm 15b. The actuator 14 is connected to the cross-member 16. Each arm 15a, 15b may be a single weldment or may include various components attached by fasteners (e.g., nuts and bolts). The first and second arms 15a, 15b each include a bracket portion 17a, 17b (FIG. 1) for fastening various linkages.

Please replace the paragraph that begins at column 3, line 20 with the following paragraph:

The compact tool carrier 5 includes a drive mechanism 18 attached to the mainframe 10. In the illustrated embodiment, the drive mechanism 18 is directly mounted (i.e., connected without intermediary parts) to the mainframe 10 by way of drive sprocket 22 connected to a hub 26 (FIG. 2). The hub 26 is attached to a shaft (not shown) that extends through a drive opening 30 (FIG. 4) of the mainframe 10. The sprocket 22, hub 26 and shaft (not shown) rotate about a rotational axis R (FIG. 5). As shown, the drive mechanism 18 includes tracks 34. In other embodiments, the drive mechanism 18 [10] includes wheels.

Please replace the paragraph that begins at column 4, line 35 with the following paragraph:

An actuator 54, shown as a hydraulic cylinder, is attached to the first side 38a of the mainframe 10 at its center pivot point $\underline{P_2}$ [P_4] and is attached to the loader arm 15a at its center pivot point P_5 to raise the loader 8. The compact tool carrier 5 may include a single actuator 54, or, as in other embodiments, a second actuator (not shown) is connected to the second side 38b (FIG. 4) of the mainframe 10 and the second arm 15b (FIG. 1). The actuator 54 is powered to raise the loader 8 and, in some embodiments, is also powered to lower the loader 8 (as opposed to a one-way actuator lowered by gravity alone).

Please replace the paragraph that begins at column 5, line 4 with the following paragraph:

In some embodiments, the mainframe 10 is characterized by a relatively low profile (i.e., the pivot points are positioned relatively low on the mainframe allowing its height to be reduced). The rotational axis R (FIG. 5) and the bottom of the compact tool carrier 5 (FIG. 2) are separated by a distance D1. Generally, the bottom of the compact tool carrier 5 corresponds to the point at which the drive mechanism 18 contacts the surface supporting the compact tool carrier 5. The rotational axis R and the forward pivot point P_1 of the first side 38a of the mainframe 10 are separated by a vertical distance D2. The rotational axis R and the rear pivot point P_3 are separated by a vertical distance D3. The rotational axis R and the central pivot point $\underline{P_2}$ [P_4] are separated by a vertical distance D4. Each of D2, D3 and D4 is less than about 1.5 times D1 (1.5xD1). In some embodiments, each of D2, D3 and D4 is less than D1 or even less than about 0.75 times D1 (0.75xD1).

III. AMENDMENTS TO THE DRAWINGS

Please amend drawing sheets 1/7-3/7 as shown in Annotated Sheets 1/7-3/7 that are included with this response.

IV. REMARKS

A. EXECUTIVE SUMMARY

The references cited by the Office in the Order Granting Request for *Ex Parte* Reexamination do not raise a substantial new question of patentability of the claims of the '386 Patent as each of the references is cumulative over prior art consider by the Examiner during examination of the '386 Patent.

Claim 1 of the '386 Patent is patentable over the S450TX Brochure in view of the Mustang Brochure and the S450TX Parts Manual because (1) the proposed modification would render the S450TX machine unsuitable for its intended purpose as the S450TX is not capable of supporting a vertical lift loader and (2) there is no reasonable expectation of success in making the modification proposed by the Office. Objective evidence of non-obviousness also indicate patentability of independent claim 1 over the cited references. Independent claim 15 of the '386 Patent is patentable over the cited references for the reasons set forth relating to claim 1 and in view that claim 15 has been amended to recite the recitation of now cancelled claim 18 that the distance between the rotational axis and the pivot point formed between a linkage and mainframe (D2) is less than twice the distance (D5) between the rotational axis and the bottom of the first side of the mainframe. The Office did not articulate reasons why claim 18 or its recitation set forth therein is obvious over the cited references on pages 5-9 of the Office action.

New independent claims 31, 38, 45 and 50 relate to the position or the number of cross-members in the loader of the compact tool carrier. As noted in the Office's Interview Summary, the rear cross-member of the loader of the Mustang Brochure would impede the operator and "makes the vertical lift of Mustang unsuitable for a compact tool carrier with a rear operator" (see the continuation sheet of the Interview Summary). For at least this reason new claims 31, 38, 45 and 50 are patentable over the cited references.

New independent claim 55 recites that the distance D2 between the rotational axis and the pivot point at which the linkage is attached to the mainframe and the distance (D4) between the rotational axis and the pivot point at which the actuator is attached to the mainframe are (1) less than the distance D1 between the rotational axis and the bottom of the compact tool carrier and (2) less than 1.5 times the distance (D5) between the rotational axis and the bottom of the first side of the mainframe. None of the cited references disclose use of a linkage with the distance between the rotational axis and the pivot point formed between the linkage and the mainframe being less than D1 and less than 1.5 D5.

B. AMENDMENT SUMMARY

Original claims 1, 3-13, 15-18 and 20 of U.S. Patent No. 9,321,386 ("the '386 Patent") are subject to reexamination. The Patent Owner has amended claims 15, 17 and 19[1] and cancelled claims 16 and 18. Claims 21-63 have been added, including new independent claims 31, 38, 45, 50 and 55. Claims 1-15, 17 and 19-63 are pending with claims 1, 3-13, 15, 17 and 20-63 being subject to examination in this reexamination proceeding. Claims 2, 14 and 19 of the '386 Patent are not subject to the reexamination proceeding.

No new matter has been added. In particular, none of the amendments or new claims broadens the claim scope beyond the claims of the original patent. Each of the new independent claims incorporates each and every element of original claim 1 of the '386 Patent and therefore is not broader than original patent claim 1.

Support for the amendments and added claims can be found throughout the specification of the '386 Patent. In particular, support for the amendment to claim 15 and for new claims 23-24 may be found at column 5, lines 11-17 and 20-31 and Figure 5 of the '386 patent. Claims 17 and 19 are amended to change their claim

[1]Claim 19 is not subject to reexamination. However, the Patent Owner has amended claim 19 by changing its dependency from claim 18 to claim 15 in view that claim 18 and intervening claim 16 have been cancelled with their recitations now included in claim 15.

dependencies. Support for new claim 21 may be found at column 4, lines 14-32 and Figures 1 and 3. Support for new claim 22 may be found at column 3, lines 46-47; column 4, lines 14-32; and Figures 1 and 3. Support for new claims 25 and 26 may be found at column 4, lines 17-19. Support for new claims 27-29 may be found at column 4, lines 25-31; column 5, lines 11-19; and Figure 5. Support for new claim 30 may be found at column 4, lines 25-31; column 5, lines 11-17 and 23-25; and Figure 5.

Support for new independent claims 31, 38, 45 and 50 and dependent claims 34, 39, 46 and 51 may be found at least at Figures 1-3 which show the location of the loader cross-member relative to the control station and relative to the pivot points that are formed in the loader. Possession of an invention may be shown "by disclosure of drawings . . . that are sufficiently detailed to show that applicant was in possession of the claimed invention as a whole." MPEP §2163(II)(A)(3)(a). Further, the drawings alone may provide written description of the invention under 35 U.S.C. §112. See, e.g., MPEP §2163(II)(A)(3)(a) and *Vas-Cath, Inc. v. Mahurkar,* 935 F.2d 1555, 1560, 19 USPQ2d 1111, 1114 (Fed. Cir. 1991) ("drawings alone may provide a 'written description' of an invention as required by Sec. 112"); *In re Wolfensperger,* 302 F.2d 950, 133 USPQ 537 (CCPA 1962) (the drawings of applicant's specification provided sufficient written descriptive support for the claim limitation at issue); *Autogiro Co. of Am. v. United States,* 384 F.2d 391, 398, 155 USPQ 697, 703 (Ct. Cl. 1967) ("In those instances where a visual representation can flesh out words, drawings may be used in the same manner and with the same limitations as the specification."). Support for the operator platform recited in independent claims 31, 38, 45 and 50 may be found at column 3, lines 46-47 and Figure 3.

Support for new claims 32 and 41 may be found at column 4, lines 25-31 of the '386 Patent. Support for new claims 33, 42, 49, 52 and 63 may be found at column 4, lines 4-8. Support for new claims 35-36, 43-44, 47-48 and 53-54 may be found at column 2, lines 46-52 and Figures 1-3. Support for claim 37 and 40 may be found at column 3, lines 20-28 and Figures 1-3.

Support for new claims 55-56 may be found at column 5, lines 17-25. Support for new claims 57-60 may be found at column 4, lines 25-31; column 5, lines 11-19; and Figure 5. Support for new claims 61-62 may be found at column 3, lines 20-28.

The Patent Owner has amended the paragraph that begins at column 2, line 44 of the '386 Patent to further recite:

> A cross-member 16 extends from the first arm 15 to the second arm 15b. The actuator 14 is connected to the cross-member 16.

Support for the amendment may be found, for example, in Figure 1 of the '386 Patent in which the cross-member is shown and in which the actuator 14 is shown as being connected to the cross-member. The drawings alone may provide written description to show that the Inventors were in possession of the subject matter (see the discussion above relating to claims 31, 34, 38-39, 45-46 and 50-51 and MPEP §2163.01 that states that the test or analysis of the description requirement is the same for amendments to the specification and for amendment to the claims).

The Patent Owner has amended the paragraphs of the specification that begin on column 3, line 20; at column 4, line 35; and at column 5, line 4 of the '386 Patent to correct several typographical errors. Correction of these errors was requested by the Office in U.S. Patent Application No. 15/062,801 which is a continuation of the '386 Patent. Those of skill in the art consider these to be obvious errors and recognize the appropriate corrections set forth in the amendments. MPEP §2163.07(II). In particular, other portions of the specification refer to the "drive mechanism 18" (see e.g., col. 3, lines 20-28) and Figures 1-3 each refer to the drive mechanism by reference character "18." In addition, other portions of the specification refer to the central pivot point formed in the mainframe as "P_2" (see e.g., col. 4, lines 19-22) and the center pivot point is referenced as "P2" in Figures 1 and 5. The errors and their corrections are obvious to those of skill in the art and do not add new matter.

The Patent Owner has amended drawing sheets 1/7-3/7 by referring to the cross-member as "16".

C. INTERVIEW SUMMARY

Patent Owner thanks the Examiners for the telephone interview on October 16, 2017. The Patent Owner discussed the patentability of the claims of the '386 Patent. The Patent Owner presented materials relating to why the claims are not obvious in view of the combination of the S450TX Brochure and the Mustang Brochure. The Patent Owner also presented materials relating to objective evidence of non-obviousness including long felt need, attempts by others, unexpected results, and commercial success. No agreement was reached.

D. THE CITED REFERENCES DO NOT PRESENT A SUBSTANTIAL NEW QUESTION OF PATENTABILITY

The Office states in the Order Granting Request for *Ex Parte* Reexamination dated April 7, 2017 (the "Order") that the brochure entitled "S450TX Mini Skid Steer" (the "S450TX Brochure"), the brochure entitled "Skid Steer Loaders, Radial & Vertical Lift" published by Mustang (the "Mustang Brochure") and the "S450TX Mini Skid Steer Parts Manual" (the "S450TX Parts Manual") raise a substantial new question of patentability for claims 1-3, 3-13,15-18 and 20 of the '386 Patent (page 8 of the Order). The Office should withdraw the determination of a substantial new question of patentability set forth in the Order. The patentability question presented in the Order was previously decided by the Examiner during examination of the '386 Patent. In particular, each of the cited references is cumulative over prior art considered by the Examiner during examination of the '386 Patent.

The Patent Owner submitted information on the Ditch Witch SK850 in an Information Disclosure Statement dated May 20, 2015 during examination of the '386 Patent. As shown below, the Vermeer S450TX Brochure is cumulative over the Ditch Witch SK850 information.

Page 1 of the S450TX Brochure

Ditch Witch SK850 information submitted in May 20, 2015 IDS

The S450TX Brochure and the Ditch Witch SK850 information each disclose ride-on machines having a platform for carrying the operator. Both machines include a radial lift loader with the loader being directly attached to each side of the mainframe at a pivot point. An actuator is pivotally attached to each side of the mainframe and the loader. In both machines, the loader pivot point is disposed above the pivot point at which the actuator is attached. The pivot points of both machines shown in the different references are disposed above the drive sprocket of the tracks. In view of these

similarities, one of skill in the art would consider the S450TX Brochure to be cumulative over Ditch Witch SK850 information submitted by the Patent Owner during prosecution of the '386 Patent.

The Patent Owner also submitted information on the Gehl Model V270 Vertical Lift Skid Loader in the May 20, 2015 Information Disclosure Statement. As shown below, the Mustang Brochure and the model referenced in the Order is cumulative over the information submitted by the Patent Owner relating to the Gehl V270.

Gehl V270 submitted in May 20, 2015 IDS

Page 18 of the Mustang Brochure

In fact, it is apparent from the Figures that the information on the Gehl V270 and the Mustang 2700V shown in the Mustang Brochure are substantially the same machines. The only apparent difference between the Gehl V270 loader and the Mustang 2700V loader is the branding decals[2]. Because the machines are substantially the same, the

[2] Gehl states on their corporate website that it acquired the Mustang Manufacturing Company in 1997 http://www.gehl.com/ about-us/history. Presumably, these are the same machines.

Mustang Brochure is cumulative over the information regarding the Gehl V270 Vertical Lift Machine submitted by the Patent Owner during prosecution of the '386 Patent.

The Office notes on page 9 of the Order that:

> the loader arm". Mustang shows a vertical lift loader arm linkage which is not directly connected to the mainframe but instead is attached pivotally to a front and rear linkage which are pivotally connected to the mainframe. See the marked-up figure from Mustang at the top of page 26 of the request. This enables Mustang's device to provide vertical lift, which the reference states provides more reach at full lift height which is optimal for applications that require loading and stacking at high heights and "By keeping the load closer to the machine, lift capacities are increased over radial lift models." While an engine is present in the Vermeer reference, there is no clear showing

During examination of the '386 Patent, the Office considered prior art that included teachings related to the outward arc by which radial lift loaders are characterized, including the disadvantages of radial lift, and how vertical lift loaders eliminate or reduce the arc and keep the load closer to the machine while maintaining a higher reach height. See, e.g., U.S. Patent No. 7,264,435; col. 1, lines 20-41; U.S. Patent No. 6,616,398; col. 1, lines 13-21; U.S. Patent No. 6,474,933; col. 1, lines 10-17 and 51-55; and U.S. Patent No. 6,325,589 col. 1, line 24 to col. 2, line 21, all cited in the May 20, 2015 IDS.

In particular, U.S. Patent No. 6,474,933 to Hoechst et al. discloses that use of vertical lift allows for "reaching a greater height":

"The present invention relates to a linkage assembly for use with a boom of a skid steer loader that controls the path of the pivot attachment point between the boom and a bucket or other implement to permit reaching a greater height and providing for a substantially vertical path for the lower portion of boom travel and a forward movement of the attachment point relative to the loader frame in the upper portions of the path of travel of the boom.

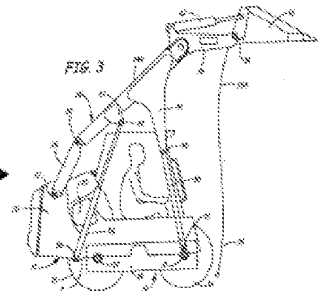

Vertical Lift Loader

"Linkage assembly for use with a boom of a skid steer . . . permit[s] ***reaching a greater height*** and ***providing for a substantially vertical path***. . . .

U.S. Patent No. 6,474,933; col. 1, lines 10-17; Fig. 3.

Further, U.S. Patent No. 6,325,589 to Jang et al., submitted in the May 20, 2015 IDS, discloses that a vertical lift loader significantly increases the load lifting capacity:

A prior art skid steer loader with a typical lift boom assembly is illustrated in FIG. 1. As shown, the skid steer loader includes a vehicle frame **10** having upright supports **12** positioned at the rear section of the frame **10**. Pivotally attached to the upright supports **12** are a pair of laterally spaced lift booms **14** which have a working implement or tool, e.g., bucket **16**, mounted between the forward free ends thereof. Vertical movement of the lift booms **14** and the bucket **16** relative to the frame **10** can be caused by means of double acting boom cylinders **18** arranged on opposite lateral sides of the frame **10**. A bucket cylinder **20** is utilized in causing the swinging movement of the bucket **16** relative to the lift booms **14**.

With the loader illustrated in FIG. **1**, the bucket **16** has a tendency to move, responsive to the elevational movement of the lift booms **14** between lowered and raised positions, along a heavily curved vertical path of travel **22** forming a part of a circle whose center lies at the pivot point **24** of the respective lift boom **14**. At about midheight point of the vertical travel path, the bucket **16** exhibits the greatest overhang OH, wherein the term "overhang" means the distance measured from the center axis of the front wheel **26** to a vertical plane on which the pivot axis of the bucket **16** lies, during the elevational movement of the bucket **16**. The prior art loader shown and described above has a disadvantage in that it becomes highly unstable as the lift booms and the loaded bucket are raised up and lowered down, due to the fact that the overhang OH directly affecting the stability of the loader grows too great at the midheight of the vertical travel path of the bucket **16**. Unstableness of the loader may lead to tipping in the worst circumstances.

In an effort to provide solution to the problem pointed out just above, U.S. Pat. No. 5,609,461 issued Mar. 11, 1997 to John M. Moffitt et al. discloses a lift boom assembly for a loader machine including a pair of laterally spaced inter-connected lift arms having a tool mounted between forward ends thereof. Each lift arm includes a main lift link having upper and lower connecting portions at a rear end thereof. A second lift link is pivotally connected to the upper connecting portion of the main lift link and partially controls movement of the respective lift arm. The opposite end of each second lift link is pivotally connected to a frame of a machine on which the lift assembly is mounted. Movement of the lift arms is further controlled by a pair of control arms.

A lower end of each control arm is pivotally connected to the frame. When the boom assembly is in a lowered position relative to the frame, a second or upper end of each control arm extends upwardly and rearwardly from the lower end and is pivotally connected to the lower connecting portion of the respective main lift link. In response to vertical movement of the boom assembly between raised and lowered positions, each control arm swings forwardly and rearwardly of its true vertical position to alter the movement of the lift arms and such that the tool is elevationally moved along a generally linear vertical path. A pair of extendable and retractable drivers provide powered vertical movement to the lift assembly and the tool carried thereby relative to the frame.

According to the lift boom assembly taught in the '461 patent, there is no denying the fact that the tool or bucket attached to the forward ends of the lift arms can be moved along a generally linear vertical path of travel between the lowered and raised positions, thus significantly improving the overall stability and the load lifting capacity of the loader. The boom assembly is however disadvantageous in

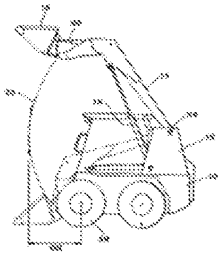

Radial Lift Loader

"The prior art loader . . . has a disadvantage in that in become highly unstable as the lift booms and loader bucket are raised up. . ."

FIG. 2

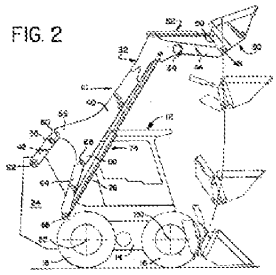

Vertical Lift Loader

"No denying the fact that the tool or bucket [of the vertical lift loader] . . . can be moved along a generally vertical path of travel . . . ***thus significantly improving*** the overall stability and ***the load lifting capacity*** of the loader.

U.S. Patent No. 6,325,589; col. 1, line 24 to col. 2, line 21

U.S. Patent No. 6,474,933 and U.S. Patent No. 6,325,589 disclose the same information the Office relied on in the Order, namely that use of vertical lift loaders increase the reach of the loader and increases lifting capacity relative to a radial lift loader. This disclosure on page 4 of the Mustang Brochure is cumulative over U.S. Patent No. 6,474,933 and U.S. Patent No. 6,325,589 which were considered by the Office during examination of the '386 Patent.

The Office admits on page 9 of the Order that "the combination of Vermeer and Mustang cannot be stated to provide a Substantial New Question of Patentability (SNQ) for the '386 patent alone." The Office cites the S450TX Parts Manual to show an engine bracket "spaced from the rear wall of the mainframe" (page 9 of the Order).

The Patent Owner submitted U.S. Patent Publication No. 2007/0132204 to Sewell and entitled "Compact Tool Carrier with Articulation Joint" in the May 20, 2015 Information Disclosure Statement. As shown in Figure 1 of Sewell reproduced below, the tool carrier 10 includes a pivot plate 26 upon which the engine 48 (Fig. 2) rests (see also Figure 10 of Sewell).

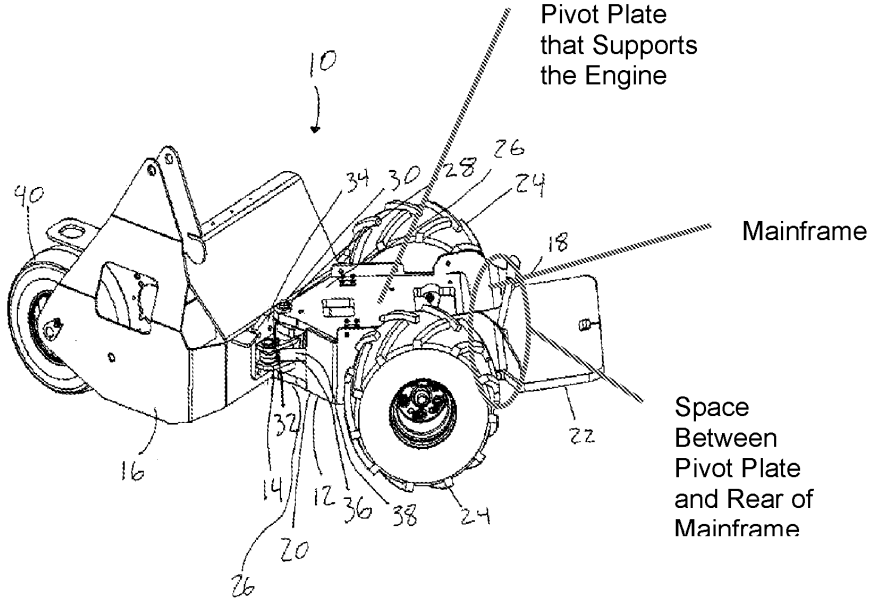

Fig. 1 of U.S. 2007/0132204 (Annotated)

As shown in Figure 1 of Sewell, the pivot plate 26 is spaced from the rear of the mainframe. Accordingly, the S450TX Parts Manual is cumulative over Sewell.

Each of Ditch Witch SK850, Gehl V270, U.S. Patent No. 6,474,933 to Hoechst, U.S. 6,325,589 to Jang, and U.S. Patent Publication No. 2007/0132204 to Sewell was considered by the Examiner (see the "List of References Cited by Applicant and ***Considered by Examiner***" that accompanied the Office action dated September 1, 2015) and appears in the "References Cited" on the first and second pages of the '386 Patent. "To the extent that a cumulative reference is repetitive of a prior art reference that was previously applied or discussed, *Portola Packaging* may ***prohibit reexamination*** of the patent claims based only on the repetitive reference." MPEP §2258.01 (emphasis added). As stated in MPEP §2242, "the same question of patentability may have already been decided by the Office where the examiner finds the additional (newly provided) prior art patents or printed publications are ***merely cumulative*** to similar prior art already fully considered by the Office in an earlier concluded examination or review of the claim" (emphasis added). As the Examiner considered Ditch Witch SK850, Gehl V270, U.S. Patent No. 6,474,933, U.S. Patent No. 6,325,589, and U.S. Patent Publication No. 2007/0132204 and found the claims of U.S. Patent No. 9,321,386 to be patentable over the references, there is no Substantial New Question of Patentability.

E. REJECTIONS UNDER 35 U.S.C. §103

The Office has rejected claims 1, 3-13, 15-18[3] and 20 under 35 U.S.C. §103 as being obvious over the S450TX Brochure in view of the Mustang Brochure and the S450TX Parts Manual. The Patent Owner submits that the reexamined claims and new claims 21-63 are patentable over the cited references for the reasons set forth below.

---

[3] Dependent claim 18 is listed on page 5, lines 9-10 as being rejected under 35 U.S.C. §103. However, the obviousness rationale set forth on pages 5-9 of the Office action does not reference dependent claim 18 nor do these page refer to the recitation set forth in claim 18.

1. Claims 1, 3-13 and New Claims 21 and 22 are not Obvious

Independent claim 1 is directed to a compact tool carrier for standing or walk-behind operator control. The compact tool carrier has a longitudinal axis and a mass of less than about 1500 kg and comprises:

> a loader having an arm, the loader being adapted to carry a tool;
>
> a mainframe for supporting the loader, the mainframe having a first side and a second side, and having a front end and a rear end relative to the longitudinal axis, the mainframe comprising an engine bracket that extends from the first side toward the second side for mounting an engine to the mainframe, the engine bracket being spaced from the rear end of the mainframe, the loader arm not being directly attached to the mainframe;
>
> a linkage pivotally attached to the first side of the mainframe and pivotally attached to the loader arm;
>
> an actuator pivotally attached to the first side of the mainframe and pivotally attached to the loader arm; and
>
> a control station having operator controls for propelling the compact tool carrier forward and for raising and lowering the loader, the control station being mounted toward the rear of the compact tool carrier and adapted to allow for standing or walk-behind operation.

The S450TX Brochure describes a compact tool carrier manufactured by the Patent Owner. The compact tool carrier shown in the S450TX Brochure includes a loader that is directly attached to the mainframe (page 1 of The S450TX Brochure shown above).

The Mustang Brochure describes and illustrates a commercial line of skid steer loaders sold under the brand name “Mustang”. On page 6 of the Office action, the

Office references the model shown on page 26 of the Request (which is shown on page 18 of the Mustang Brochure) and reproduced above ("Mustang 2700V"). Mustang 2700V includes a loader that is indirectly connected to the frame of the machine by first and second linkages and an actuator.

The S450TX Parts Manual includes part diagrams of the S450TX compact tool carrier.

The Office articulates its rationale for obviousness on page 6 of the Office action:

> It would have been obvious from the teaching of Mustang to modify the tool carrier of Vermeer by pivotally attaching the linkage to the mainframe while not directly attaching it to the first side of the mainframe and to pivotally attach the loader arm to the linkage to increase the lift capacity and to enable the lifting of the load to the full height . . .

One of skill in the art would not have made the modification suggested by the Office at the date of the invention because (1) the proposed modification would render the S450TX machine unsuitable for its intended purpose as the S450TX is not capable of supporting a vertical lift loader (MPEP §2143.01(V)) and (2) there is no reasonable expectation of success in making the modification proposed by the Office (MPEP §2143.02). Objective evidence of non-obviousness also indicate patentability of independent claim 1 over the cited references.

<u>i. The Proposed Modification Renders the Prior Art Unsuitable for its Intended Purpose as the S450TX cannot Accommodate a Vertical Lift Loader</u>

The compact tool carrier shown in the S450TX Brochure was developed and sold by the Patent Owner. The Inventors of the '386 patent recognized that the S450TX is <u>specifically designed to accommodate a radial lift loader arrangement and would not be able to support a vertical lift loader</u> (See Hartke Declaration). A CAD rendering of the S450TX mainframe is shown below in Figure A (See also the mainframe shown on page p1.08 of the Parts Manual).

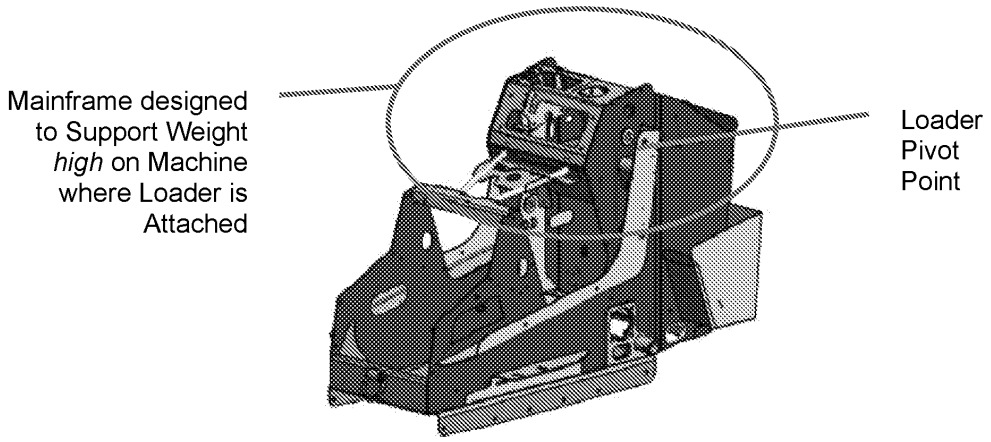

Figure A

The S450TX mainframe was specifically designed to accommodate a radial lift loader. Radial lift loaders connect the loader relatively high on the mainframe and the mainframe is designed to accommodate such weight by extending the mainframe high on the machine.

The S450TX machine does not include an available window in which the pivot points may be lowered. As shown in the CAD rendering of the S450TX machine (Figure B) below, the lower portion of the S450TX machine is occupied by the track assembly and by the fuel tank housing.

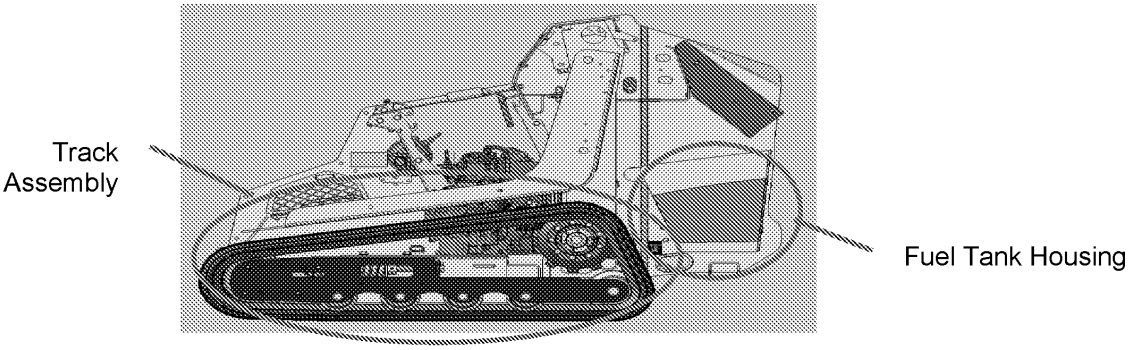

Figure B

There is no space in the S450TX machine to lower the pivot points. Even assuming it would have been obvious to modify, the tracks, fuel tank housing, and engine would need to be repositioned. Indeed, as can be seen below in the CAD renderings of the S450TX machine and an embodiment taught in the '386 Patent (Figures C-E), the positions of these components in the S450TX machine and machine of the '386 Patent are significantly different.

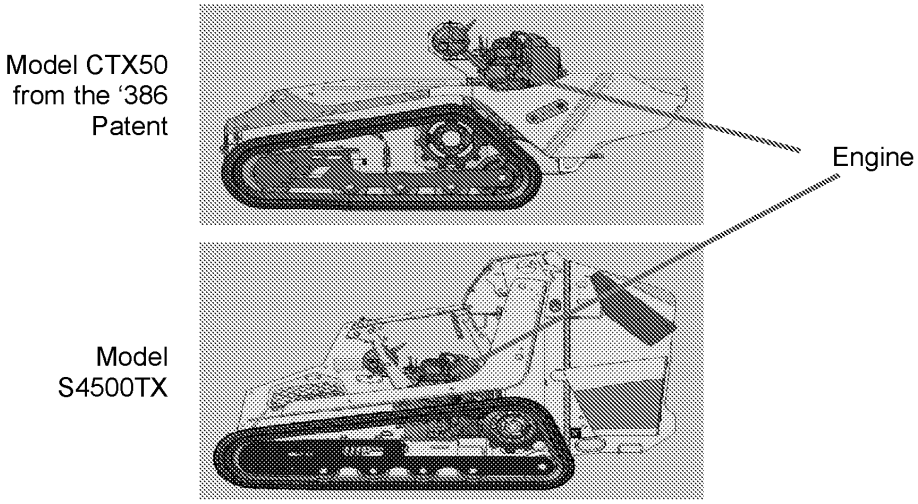

Figure C

Model CTX50 from the '386 Patent

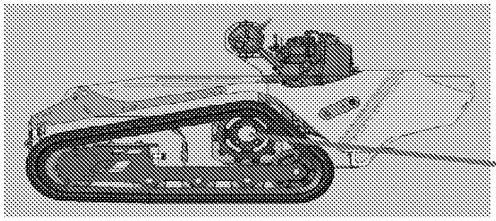

Track Drive Sprocket

Model S4500TX

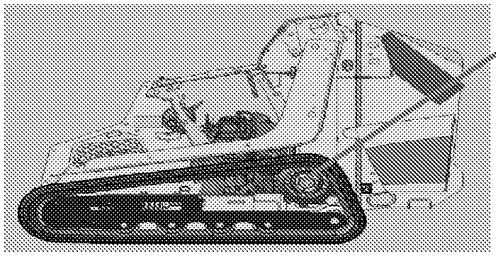

Figure D

Model CTX50 from the '386 Patent

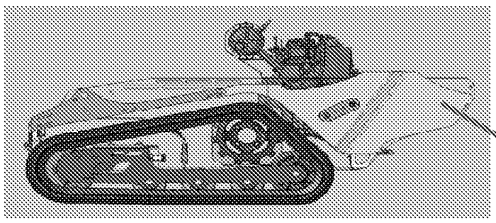

Fuel Tank Housing

Model S4500TX

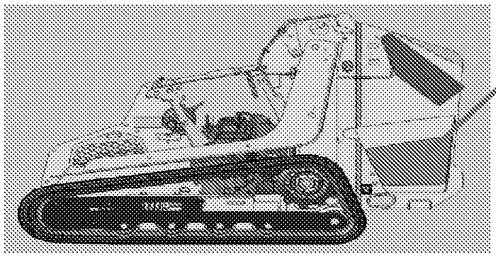

Figure E

The mainframe of the S450TX machine was specifically designed to accommodate its track arrangement, engine location, and fuel tank. By repositioning these components, the S450TX mainframe does not include a proper distribution of weight from front to back of the mainframe.

In view of these considerations, those of skill in the art recognize that the S450TX compact tool carrier cannot accommodate a vertical lift loader. "If proposed modification would render the prior art invention being modified unsatisfactory for its

intended purpose, then there is no suggestion or motivation to make the proposed modification." MPEP §2143.01(V). Because the S450TX compact tool carrier of the S450TX Brochure cannot support a vertical lift loader, the compact tool carrier cannot operate for its intended purpose as a compact utility loader under the modification proposed by the Office, and therefore the obviousness rejection is in error.

ii. There was no Expectation of Success in Making the Proposed Modification

One of skill in the art would not have modified the S450TX machine at the time of the invention by including a vertical lift loader as proposed by the Office as there is no expectation of success to make the proposed modification. Compact tool carriers have a very small window in which to position the linkages and actuator of a vertical lift loader. The linkages and actuators need sufficient structure in the mainframe to make their connections with the mainframe and need sufficient clearance to allow the actuators and linkages to swing forward and back. This is illustrated by reference to the S450TX machine itself:

Small Area to Position Linkages and Actuator that Swing Forward and Back

Page 1 of the S450TX Brochure

Non-structural access doors

Further, as shown in Figure B above, previous compact tool carriers lack sufficient space in which to lower the pivot points to accommodate the vertical lift loader.

Standard size loaders that include a vertical lift loader arrangement are characterized by very large loader arms as shown in Figure F.

Figure F

Compact tool carriers lack the space to accommodate such loader arms. Indeed, this is recognized by The Toro Company ("Toro"), the Requester of this *Ex Parte* Reexamination. Toro, as Applicant of U.S. Patent Publication No. 2016/0244937, admits that:

> **[0007]** Finally, the vertical reach of the loader arms on compact utility loaders is somewhat limited. While high lift loader arms are known on full size skid steer loaders as disclosed in U.S. Pat. No. 5,542,814, the use of such high lift loader arms on a compact utility loader has been considered difficult if not impossible due to size and durability constraints. Accordingly, it would be a further advance in the art to provide a way of safely and durably providing high lift loader arms on compact utility loaders to extend the vertical reach of such loaders. For example, this would allow a compact utility loader to dump debris or materials at higher elevations than previously, thus allowing the use of larger trucks to accept such debris or materials for transport.

Toro's admission in U.S. Patent Publication No 2016/0244937 that incorporation of a vertical lift loader arm such as that of Mustang 2700V onto a compact tool carrier such as the S450TX machine "*is difficult if not impossible*" is compelling evidence that there is no expectation of success in making the modification proposed by the Office. The statement by Toro proves that others of ordinary skill in the art recognized that the inventive design was difficult or impossible. They also recognized that the loader arms of compact tool carriers needed to have a small profile

so as to not reduce the field of vision of operators positioned toward the rear of the machine:

> The present invention relates to a small loader that is manually operated by a standing operator at the rear of the loader. The loader has a low lift arm profile, so that an operator standing at the rear of the loader can see the work area. The low profile lift arms aid side-to-side visibility.
>
> Various small self-propelled loaders have been advanced, where an operator will either stand or walk on the ground behind the loader or stand on a platform on the loader frame to manipulate the work element that is attached to the forward ends of pivoting lift arms.
>
> These loaders find utility in small load applications, where loads that are too heavy for a person to lift can be hoisted. The ability of the loaders to be operated in small areas is important. Ease of manipulation of the bucket or work tool, as well as the ability to see the work that is being carried out is also important.

U.S. Patent No. 6,695,568, col. 1, lines 6-21

One of ordinary skill in the art would not expect the relatively large loader arms of a vertical lift loader to operate on a substantially smaller compact utility loader with any expectation of success.

The Inventors of the '386 patent experienced many failures during development of the loader arrangement described therein (See the Figures below and the Figures that accompanied the presentation materials submitted during the Examiner Interview). In particular, while developing a compact tool carrier that could support a vertical lift loader, the Inventors experienced catastrophic fractures of the loader arms (Figure G).

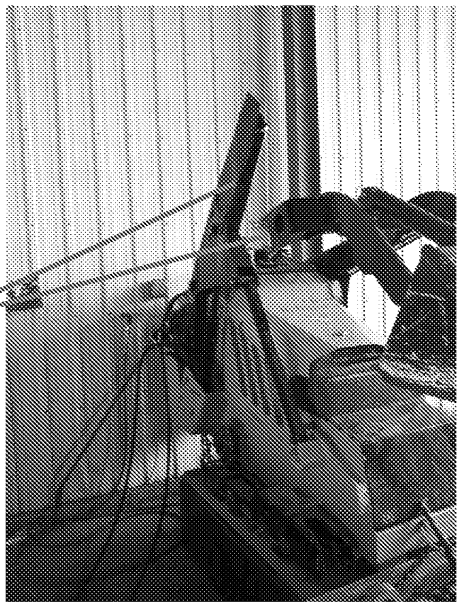

Figure G

The Inventors experienced breakage of pivot pin retainers (Figure H) and many retainers bent during testing (Figure I).

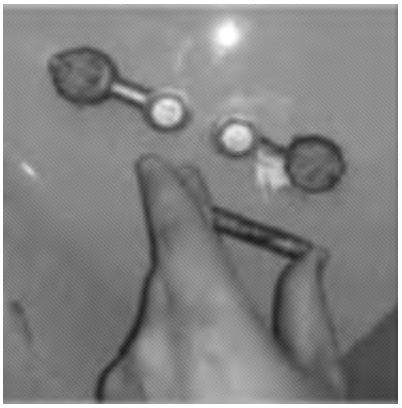

Figure H

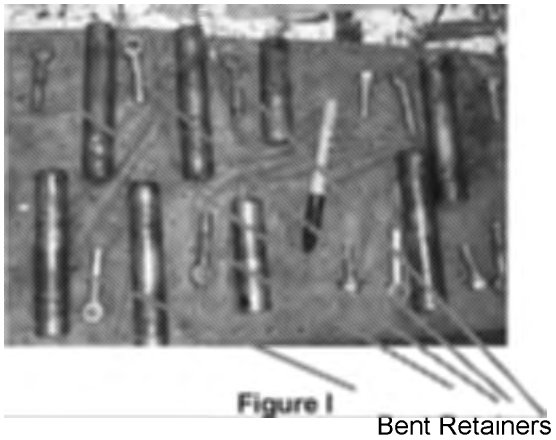

Figure I

These failures were encountered despite the Inventors <u>designing a mainframe from the ground-up</u>. These failures are strong evidence that the field of endeavor of the '386 Patent is unpredictable. Indeed, even small changes to pivot points, weight distribution,

and the like in vertical lift machines cause significant changes in the lift profile and lift capacity of the machine. The unpredictable nature of these changes is ***exaggerated*** in compact utility loaders (see Hartke declaration). The lift profile behavior of compact tool carriers is unpredictable <u>even with the use of state of the art tools</u> available to the inventors at the effective filing date of the '386 Patent (see Hartke declaration). "A rationale to support a conclusion that a claim would have been obvious is that all the claimed elements were known in the prior art and one skilled in the art could have combined the elements as claimed by known methods with no change in their respective functions, **<u>and the combination would have yielded nothing more than predictable results to one of ordinary skill in the art</u>**" (MPEP 2143.02(I); Emphasis added) (See also *KSR Int'l Co. v. Teleflex Inc.,* 550 U.S. 538, 416, 82 USPQ2d 1385, 1395 (2007)).

There is no expectation of success to use a vertical lift loader such as that of the Mustang 2700V of the Mustang Brochure on a compact utility loader such as that of the S450TX machine of the S450TX Brochure in view that (1) compact tool carriers lack sufficient space to accommodate the linkages and actuators of a vertical lift loader which swing forward and back, (2) Toro, the Requester, admitted that incorporation of a vertical lift loader arm onto a compact tool carrier "*is difficult if not impossible*", (3) the field of endeavor is unpredictable as evidenced by the Inventors experiencing multiple design failures to develop a compact tool carrier with a vertical lift loader despite starting from the ground up in developing such a machine and despite resort to start of the art tools. "Where there is a reason to modify or combine the prior art to achieve the claimed invention, the claims may be rejected as prima facie obvious **provided there is also a reasonable expectation of success**." (MPEP 2143.02(I). The lack of a reasonable expectation of success is a critical factor in the obviousness rationale:

> Many basic approaches that a practitioner may use to demonstrate nonobviousness also continue to apply in the post-KSR era. Since it is now clear that a strict teaching-suggestion-motivation approach is not the only way to establish a prima facie case of obviousness, it is true that practitioners have been required to shift the emphasis of their

> nonobviousness arguments to a certain degree. However, familiar lines of argument still apply, including teaching away from the claimed invention by the prior art, **lack of a reasonable expectation of success**, and unexpected results. Indeed, they **may have even taken on added importance** in view of the recognition in KSR of a variety of possible rationales.

MPEP §2145; Emphasis added.

As there was no expectation of success to use a vertical lift loader on a compact utility loader, independent claim 1 is patentable over the S450TX Brochure in view the Mustang Brochure and the S450TX Parts Manual.

iii. Objective Evidence of Non-obviousness

Secondary considerations of non-obviousness such as long felt need, failure of others, commercial success and unexpected results support the patentability of independent claim 1 over the S450TX Brochure in view of the Mustang Brochure and the S450TX Parts Manual. "Objective evidence relevant to the issue of obviousness must be evaluated by Office personnel. Id. at 17-18, 148 USPQ at 467. Such evidence, sometimes referred to as 'secondary considerations,' may include evidence of commercial success, long-felt but unsolved needs, failure of others, and unexpected results. The evidence may be included in the specification as filed, accompany the application on filing, or be provided in a timely manner at some other point during the prosecution." MPEP §2141(II).

a. Unexpected Results

As described in the Hartke declaration, an embodiment of the invention on a compact tool carrier increased the lift capacity of the machine ***by 32%***. This increase is attributable to the inventive change in the loader design because the increase occurred without a significant increase in the weight of the compact tool carrier. This increase in lift capacity (sometimes referred to as "Rated Operator Capacity") was unexpected. As proof of the unexpected results, and in contrast to the prior art designs, the Mustang

loader only increased the lift capacity by 3.8% when switching from a radial lift loader to a vertical lift loader (i.e., a machine in which the loader is connected to the mainframe by a linkage and actuator as set forth in claim 1 of the '386 Patent) of the same weight (see "Specifications" on page 22 of the Mustang Brochure with the relevant specifications being shown in Table 1 below).

	Mustang Skid Loaders 2600R	2700V
Lift Capacity increase of only 3.8%	2,600 lbs. (1179)	2,700 lbs. (1225)
	2,780 lbs. (1261)	3,000 lbs. (1361)
	21.5 gal. (81.4)	24.5 gal. (92.7)
	8.0 mph (12.9)	7.4 mph (12)
	11.9 mph (19.2)	11.9 mph (19.2)
Weight	8,200 lbs. (3718)	8,150 lbs. (3697)

Table 1

This is an ***eight-fold increase*** in the lifting capacity compared to the increase that is expected from the Mustang Brochure. "A **greater than expected result** is an evidentiary factor pertinent to the legal conclusion of obviousness ... of the claims at issue." (MPEP §716.02(a), Emphasis added; see also *In re Corkill,* 711 F.2d 1496, 226 USPQ 1005 (Fed. Cir. 1985)). As stated in MPEP §2145, "unexpected results . . . may have even taken on **added importance** in view of the recognition in KSR of a variety of possible rationales" (Emphasis added).

b. Long Felt Need and Attempts by Others

As discussed during the October 16 interview, compact tool carriers have been under commercial development for over 30 years. Throughout this period, manufacturers continually have attempted to increase lift capacity of compact tool carriers without sacrificing machine weight and maneuverability.

Others have attempted to solve the problem of increasing the lift capacity of compact tool carriers without sacrificing their compact design in a variety of ways. For example, manufacturers have shifted from “walk-behind” machines to predominantly “ride-on” machines. Manufacturers of ride-on machines are permitted to incorporate an average weight of an operator (165 lb standard) in the tip capacity testing which increases the rated lift capacity.

	MFG	MODEL	TIP	Design	Boom	HP
2000	Toro	TX420	1480	Walk Behind	Radial	20
	Bobcat	MT50	1500	Walk Behind	Radial	20
	Ditchwitch	SK500	1450	Walk Behind	Radial	25
	Vermeer	S600	1200	Ride On	Radial	25
2005	Vermeer	S600TX	1450	Ride On	Radial	26.5
	Bobcat	MT52	1600	Walk Behind	Radial	23
	Toro	TX525	1580	Walk Behind	Radial	24
	Ditchwitch	SK650	1860	Ride On	Radial	31.5
	Boxer	532DX	2100	Ride On	Radial	32
	Vermeer	S800TX	2400	Ride On	Radial	35
2010	Ditchwitch	SK850	2465	Ride On	Radial	37
	Vermeer	S450TX	1430	Ride On	Radial	25
	Boxer	950HD	2734	Ride On	Radial	48
	Bobcat	MT85	2458	Ride On	Radial	25
2015	Vermeer	CTX50	1715	Ride On	Vertical	25
	Toro	TX1000	3071	Ride On	Vertical	25
	Vermeer	CTX100	2958	Ride On	Vertical	40
2017	Ditchwitch	SK1050	3035	Ride On	Radial	37
	Ditchwitch	SK1550	4451	Ride On	Radial	44

All models now ride on
To incorporate weight of operator in
Tip capacity testing (165 lbs. ISO std)

**Models listed in chronological order based on introduction to the market*

Oher manufacturers have included “weight kits” that add weight to the back of the machine to increase lift capacity while sacrificing ground clearance (Figure J).

Weight Added toward Rear of Compact Tool Carrier

Figure J

Commercial users have even bolted their own counter-weights near the rear of the machine to increase lift capacity (Figure K):

Weight Added by Customers

Figure K

Prior art patents even have addressed the problem of increased lift capacity while maintaining the compact design of the machines. For example, U.S. Patent No. 6,695,568 discloses use of "far rear pivot points to increase the lift capacity:

> The far rear pivot of the lift arms permits using a longer arm on the same length machine. This increases the lift capacity for the same size actuator and there is a longer arc of movement. This means that the bucket or tool moves more vertically as it initially raises, rather that having a pronounced arcuate path that causes the bucket to move forward a significant amount as it starts to lift.

U.S. Patent No. 6,695,568; col. 1, lines 48-54.

U.S. Patent No. 7,494,314 discloses use of pivotal lift arms to allow the load carried by the compact tool carrier to be moved over the loader frame:

> A loader has lift arms that are used for mounting a number of different attachments. The attachments can be mounted to the rear of the forward end of the lift arms in order to move the center of gravity of the attachment more directly over the loader frame. Various types of attachments can be used, as shown, and can be controlled to be pivoted for dumping or loading, and can be raised and lowered on the lift arms.

U.S. Patent No. 7,494,314; abstract.

These attempts by others have resulted, at best, in marginal increases in the rated lift capacity of the compact tool carrier.

In comparison, by changing design from a radial lift compact tool carrier to a vertical lift compact tool carrier in which the loader is connected to the mainframe by a linkage and actuator as set forth in claim 1 of the '386 Patent, a ***32% increase*** in the rated operator capacity was achieved without significantly increasing the weight of the vehicle. The objective evidence included in the Hartke declaration establishes a long-felt need for increased lift capacity in compact tool carriers that was not satisfied by the attempts of others. The declaration is further evidence of nonobviousness of independent claim 1 (See MPEP §2141(II)).

c. Commercial Success

Both Toro (the Requester) and other third parties have indicated that the compact tool carrier of independent claim 1 of the '386 Patent is a commercially successfully product with the success of the product being directly tied to the vertical-lift arrangement of the compact tool carrier. CompactEquip.com referred to the commercial product ("the CTX50") as a "game-changer" and directly linked the enhancements to the new vertical-lift arrangement of the loader:

> (http://compactequip.com/features/innovative-iron-awards-toro-vermeer-compact-tool-carriers/attachment/vermeer-compact-tool-carrier/)The Vermeer (http://vermeer.com) CTX50 boasts a 600-lb ISO-rated operating capacity and a tipping capacity of 1,715 lbs due to its vertical-lifting path. The vertical-lift path is designed to keep the load closer to the machine, allowing it to lift more than a similar-sized compact tool carrier with a radial-lift path. A vertical-lift path also provides a higher lift height. These enhancements along with the Vermeer exclusive single pilot-operated joystick and stand-on platform make the CTX50 a game-changer in the rental and landscape market.

Toro incorporated the vertical lift arrangement of claim 1 of the '386 Patent in its "Dingo TX 1000" compact tool carrier. This product has been praised for its increased lift capacity that results from the vertical lift arrangement that is set forth in independent claim 1 of the '386 Patent. Toro notes that the vertical lift design "allows it to lift more weight" and that Toro "doubled the capacity of our current loaders" (https://www.equipmentworld.com/toros-new-vertical-lift-dingo-tx-1000-lays-claim-to-strongest-compact-utility-loader-on-the-market-photos/). The third party praise by Toro and others of the vertical lift arrangement set forth in claim 1 of the '386 Patent that is incorporated in the CTX50 and Dingo TX1000 machines is further evidence of nonobviousness of independent claim 1. See MPEP §2141 ("Objective evidence relevant to the issue of obviousness must be evaluated by Office personnel. . . . and may include evidence of commercial success . . .). By attributing the increase in lift capacity to the vertical lift design that is set forth in claim 1 of the '386 Patent (i.e., a machine in which the loader is connected to the mainframe by a linkage and actuator as recited in claim 1), "nexus" between the commercial success and the claimed invention has been established (See MPEP §2145).

Because one of skill in the art would not have made the modification suggested by the Office because the proposed modification would render the S450TX machine unsuitable for its intended purpose and there is no reasonable expectation of success in making the modification proposed by the Office and because objective evidence of non-obviousness indicate patentability of independent claim 1, claim 1 is patentable over the S450TX Brochure in view of the Mustang Brochure and the S450TX Parts Manual.

Dependent claims 3-13 incorporate the recitations of independent claim 1 by way of their dependency therefrom and are patentable for at least the reasons set forth above relating to independent claim 1.

New dependent claim 21 recites that the compact tool carrier has a second linkage. As the loader travels from a down position to a vertically raised position, the pivot points formed between mainframe and each of the first linkage, second linkage, and actuator and the pivot points formed between the loader arm and each of the first linkage, second linkage and actuator are (1) disposed between the operator controls and the bottom of the mainframe and/or (2) disposed forward of the control station. In this arrangement, the pivot points are positioned within the profile of the machine and/or forward of the control station which reduces pinch points for the operator.

As shown from pages 3 and 5 of the Mustang Brochure reproduced below, Mustang 2700V includes linkage pivot points that swing back and forth at the rear of the machine where the operator would be positioned in a compact tool carrier.

Pivot Point Near Operator in Down Position

Page 3 of the Mustang Brochure

Pivot Point Near Operator in Partially Raised Position

Fig. 5 of the Mustang Brochure

In the modification proposed by the Office, one of skill of the art would not move the pivot points forward. The prior art indicates that these pivot points should be positioned <u>as far rearward and high</u> as possible to increase the lift capacity of the compact tool carrier. In particular, U.S. Patent No. 6,695,568 states that:

> While it is desirable to have the pivot points for the boom near the rear of the small loader, and relatively high so that the reach is adequate for operation, conventional, straight lift arms tend to block vision to the side, as they are raised. Additionally, they will be in the way for access from the side of the loader to components such as the engine or drive components that are nested between the lift arms.

U.S. Patent No. 6,695,568; Col. 1, lines 23-29

> The lift arms are pivoted at the uppermost, rear portion of the frame, and extend forwardly to support a bucket, or other work implement at the forward ends of the arms. Hydraulic actuators are utilized for raising and lowering the lift arms, in a normal manner.
>
> The far rear pivot of the lift arms permits using a longer arm on the same length machine. This increases the lift capacity for the same size actuator and there is a longer arc of movement. This means that the bucket or tool moves more vertically as it initially raises, rather that having a pronounced arcuate path that causes the bucket to move forward a significant amount as it starts to lift.

U.S. Patent No. 6,695,568; Col. 1, lines 43-54.

As the art teaches that the pivot points should be as rearward and high as possible, one of skill in the art would not move the pivot points (1) between the operator controls and the bottom of the mainframe and/or (2) forward of the control station as recited in claim 21. For at least these reasons claim 21 is patentable over the cited references.

Claim 22 recites that the pivot points formed between the mainframe and each of the first linkage, second linkage and actuator are forward of the operator platform. As shown above in Figures 3 and 5 of the Mustang Brochure, Mustang 2700V includes pivot points in the mainframe that would be longitudinally *aligned* with an operator platform and not *forward* of the operator platform. For at least these reasons claim 22 is patentable over the cited references.

2. Claims 15, 17 and 19 and New Claims 23-30 are not Obvious

As amended, independent claim 15 is directed to a compact tool carrier and comprises:

a loader adapted to carry a tool;

a mainframe for supporting the loader, the mainframe having a first side and a second side, and having a front end and a rear end relative to the longitudinal axis, the mainframe comprising an engine bracket that extends from the first side toward the second side for mounting an engine to the mainframe, the engine bracket being spaced from the rear end of the mainframe, each side having a top and a bottom, the first side of the mainframe having at least two pivot points relative to the loader, the loader not being directly attached to the mainframe;

a linkage pivotally attached to the first side of the mainframe at a pivot point and pivotally attached to the loader;

an actuator pivotally attached to the first side of the mainframe at a pivot point and pivotally attached to the loader;

a drive mechanism comprising tracks or wheels for propelling the compact tool carrier over a supporting surface, the drive mechanism being attached to the mainframe about a rotational axis, the compact tool carrier having a bottom at which the drive mechanism contacts the supporting surface, the rotational axis and bottom of the compact tool carrier being separated by a vertical distance D1, the rotational axis and the bottom of the first side of the mainframe being separated by a vertical distance D5, the rotational axis and the pivot point at which the linkage is attached to the mainframe being separated by a vertical distance D2, the rotational axis and the pivot point at which the actuator is attached to the mainframe being separated by a vertical distance D4, both D2 and D4 being less than 1.5 times D1 and being less than twice D5; and

a control station having operator controls for propelling the compact tool carrier forward and for raising and/or lowering the loader, the control station being mounted toward the rear of the compact tool carrier and adapted to allow for standing or walk-behind operation.

The Patent Owner has amended independent claim 15 by incorporating dependent claim 18 and intervening claim 16 into independent claim 15[4]. The Office states on page 5, lines 9-10 of the Office action that dependent claim 18 (which is now incorporated into independent claim 15) is rejected under 35 U.S.C. §103. However, the obviousness rationale set forth on pages 5-9 of the Office action does not reference dependent claim 18 nor do these pages refer to the recitation set forth in claim 18 that "the rotational axis and the bottom of the first side of the mainframe are separated by a vertical distance D5, both D2 and D3 being less than twice D5." The Office bears the initial burden of factually supporting a *prima facie* conclusion of obviousness. MPEP §2142. There must be some articulated reasoning with some rational underpinning to support a legal conclusion of obviousness. MPEP §2143.01(IV).

Inasmuch as independent claim 15 recites a compact tool carrier having a linkage pivotally attached to the first side of the mainframe at a pivot point and pivotally attached to the loader and that the loader is not directly attached to the mainframe, independent claim 15 is patentable over the S450TX Brochure in view of the Mustang Brochure and the S450TX Parts Manual for the reasons set forth above relating to independent claim 1.

The Patent Owner submits that claim 15 as amended is further patentable over the S450TX Brochure in view of the Mustang Brochure and the S450TX Parts Manual as the Mustang Brochure does not disclose a vertical lift loader arrangement in which the distance between the rotational axis and the pivot point formed between a linkage and mainframe (D2) is less than twice the distance (D5) between the rotational axis and the bottom of the first side of the mainframe.

With Reference to Figure L below, the Mustang 2700V includes two linkages one each side of the machine.

---

[4] Now canceled claim 16 recites a distance "D3" between the rotational axis and the pivot point at which the actuator is attached to the mainframe. Claim 15 as amended refers to this distance as "D4" to maintain consistency with Figure 5 and column 5, lines 7-19 of the '386 Patent.

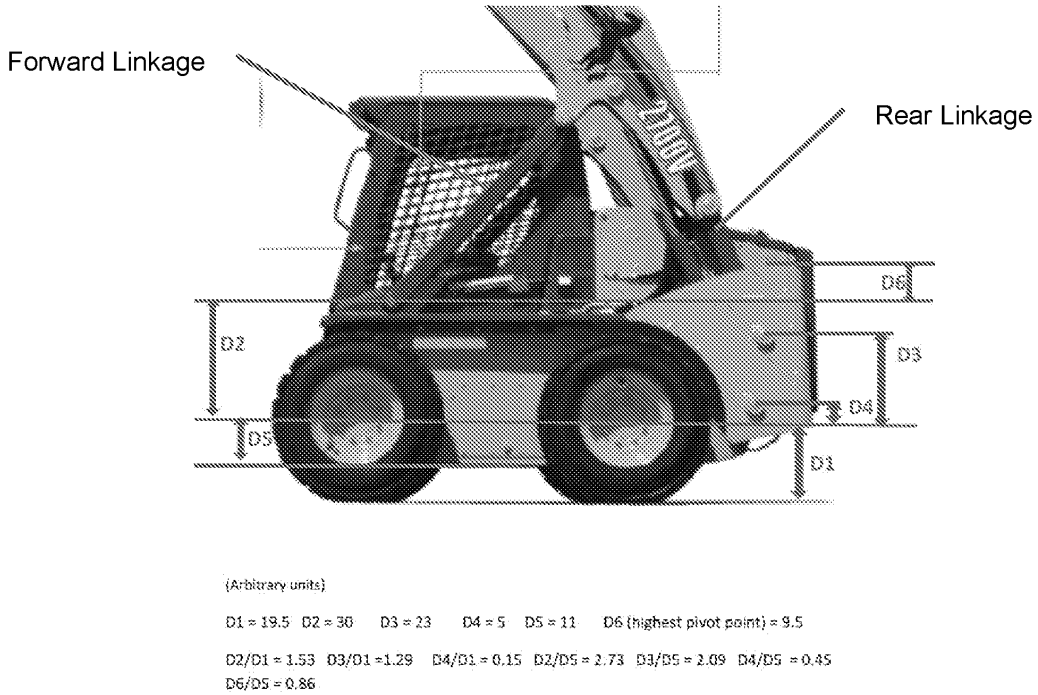

Figure L

The distance between the rotational axis (e.g., the center of the wheel hub) and the pivot point of the forward linkage in Mustang 2700V is referred to as "D2" in Figure L with the corresponding distance of the rear linkage being referred to as "D3". Significantly, <u>both distances D2 and D3 (i.e., the distances between the forward and rear linkages and the rotational axis) are more than twice D5</u> (2.73 and 2.09 respectively). Mustang 2700V does not include a linkage with the distance between its pivot point and the rotational axis being less than twice D5.

The Requester included measurements relating to the actuator and the rear linkage of the Mustang 2700V machine on page 30 of the Request which is copied below.

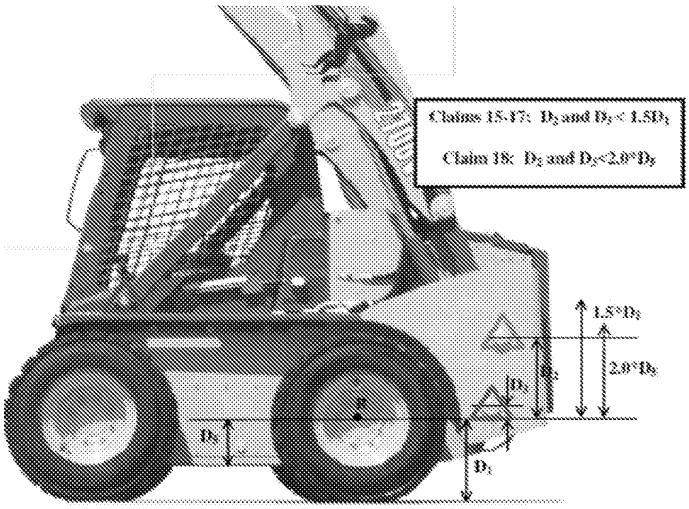

Figure from Page 30 of the Request

As shown below, the "rotational axis" referenced by the Requestor is <u>not at the center</u> of the wheel hub.

Rotational Axis R and intersecting line are ***not centered*** in wheel hub

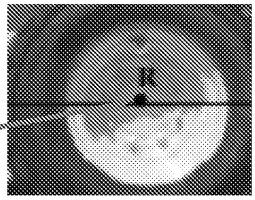

Detailed View of Page 30 of the Request

Accordingly, the various ratios listed by the Requestor <u>are not accurate</u>. The distance between the rotational axis and the pivot point formed between the mainframe and the rearward linkage of Mustang is greater than twice D5 as noted above in Figure L.

As the S450TX Brochure in view of the Mustang Brochure and the S450TX Parts Manual does not disclose a loader having a linkage that forms a pivot point with the mainframe in which the distance between the pivot point and the rotational axis is less than twice the distance between the rotational axis and the bottom of the first side of the mainframe (D5) and the Office has not articulated any reason why one of skill in the art

would arrive at such a loader arrangement, independent claim 15 and claims 17 and 20 depending therefrom are patentable over the cited references.

New claim 23 recites that D2 is less than 1.75 D5 and new claim 24 recites that both D2 and D4 are less than 1.5 D5. As noted above, the pivot points of the two linkages of Mustang are separated from the rotational axis by 2.73 D5 and 2.09 D5, respectively, and neither linkage satisfies the recitation of claim 23 that the distance D2 between the rotational axis and the pivot point of the linkage is less than about 1.75 D5 or the recitation of claim 24 that D2 is less than about 1.5 D5. For at least this reason, new claims 23 and 24 are further patentable over the cited references.

New claim 25 recites that D2 is less than D1 (i.e., the distance between the rotational axis and the bottom of the compact tool carrier) and new claim 26 recites that D2 is less than 0.75 D1. As shown in Figure L above, the pivot points of the two linkages of Mustang 2700V are separated from the rotational axis by 1.53 D1 and 1.29 D1, respectively. For at least this reason, new claims 25 and 26 are further patentable over the cited references.

New claim 27 recites that the compact tool carrier include a second linkage and that the distance between the rotational axis and each of the pivot points formed between the mainframe and the first linkage, second linkage, and actuator be less than 1.5 D1. As shown above in Figure L, the pivot point of the forward linkage of Mustang 2700V is separated from the rotational axis by 1.53 D1. For at least this reason, new claim 27 is further patentable over the cited references.

New claims 28, 29, and 30 each recite that the compact tool carrier include a second linkage with one of the pivot points formed between the mainframe and the first linkage, second linkage or actuator being a forward-most pivot point. Claim 28 recites that the distance between the rotational axis and the forward-most pivot point is less than D1 and claim 29 recites that this distance is less than about 0.75 D1. As shown above in Figure L, the forward-most pivot point of the Mustang 2700V is separated from the rotational axis by 1.53 D1.

Claim 30 further recites that the distance between the rotational axis and the forward-most pivot point is less than 1.5 D5. As shown above in Figure L, the forward-most pivot point of Mustang is separated from the rotational axis by 2.73 D5. As none of the cited references disclose or suggest the recitations of new claims 28-30, claims 28-30 are patentable over the cited references.

3. New Claims 31 to 63 are not Obvious

Independent claim 31 includes the recitations of claim 1 and further recites that the loader is moveable between a down position and a vertically raised position and that the loader include a first arm, second arm, and at least one cross-member that extends from the first arm to the second arm. Each cross-member is disposed forward of the control station in the vertically raised position. The compact tool carrier includes an operator platform for standing operation of the operator controls of the control station mounted toward the rear of the compact tool carrier.

As discussed during the October 16 interview and in the Hartke Declaration, by eliminating cross-members toward the back of the loader such as the cross-members that would be positioned at or behind the control station, the behavior of the loader changes because the structure of the loader is less able to communicate laterally across the loader (i.e., absorb forces or loads from side-to-side).

With reference to the figure on page 5 of the Mustang Brochure reproduced below, the Mustang 2700V includes a rear cross-member and a front cross-member.

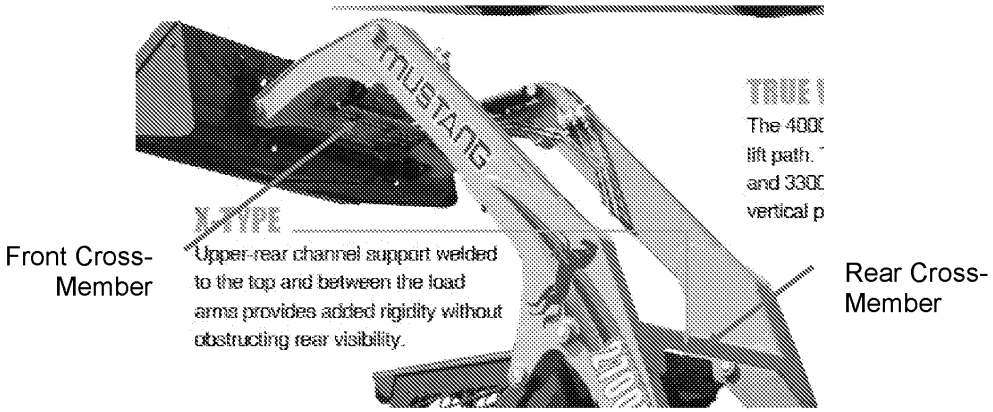

Fig. 5 of Mustang Brochure

The rear cross-member is said to "provide added rigidity without obstructing visibility." With reference to Figure 3 of the '386 Patent in which an example compact tool carrier is shown, in the compact tool carrier of independent claim 31, the loader includes at least one cross-member with each of the cross-members being *forward of the control station* in the vertically raised position.

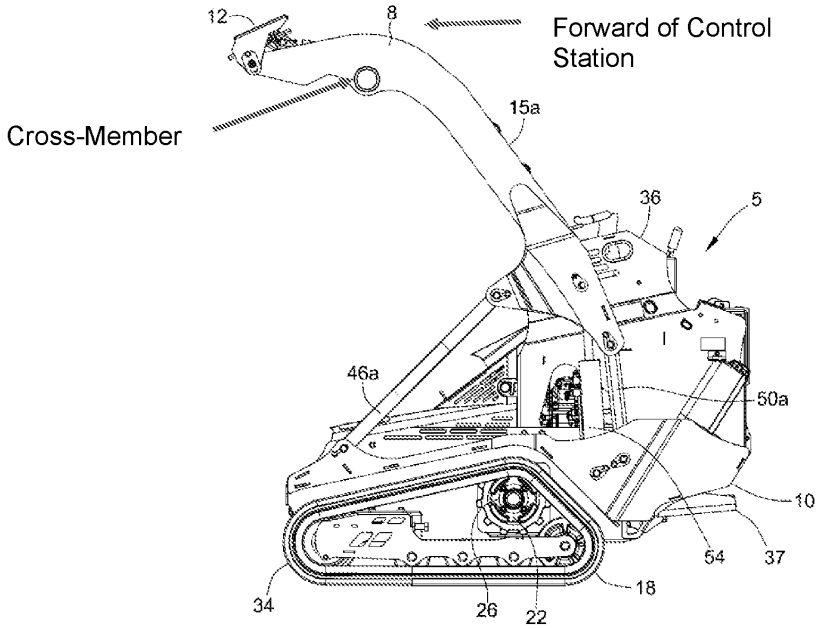

Fig. 3 of the '386 Patent

To modify Mustang 2700V as recited in claim 31, the rear cross-member must be eliminated and/or moved forward of the control station which affects the behavior of the loader. As stated during the October 16 interview, this significantly increases the complexity in designing a compact tool carrier with a vertical lift loader as the forces applied to each loader arm are not well communicated laterally across the loader. For example, during lifting, an uneven load may cause one arm to be under compression while the other arm is under tension. This different division of forces across the loader is absorbed by the mainframe which increases the complexity in designing the machine.

For at least these reasons independent claim 31 and claims 32-37 depending therefrom are patentable over the cited references.

New independent claim 38 includes the recitations of independent claim 1 and further recites that the loader includes a first arm, second arm, and a *single* cross-member that extends from the first arm and second arm. Claim 38 also recites an operator platform for standing operation of the operator controls of the control station

mounted toward the rear of the compact tool carrier. As shown above in Figure 5 of the Mustang Brochure, Mustang 2700V includes *two* cross-members. Elimination of a cross-member from the loader arrangement of Mustang 2700V changes the behavior of the loader and increases the complexity in designing the mainframe. For at least this reason, claims 38 and 39-44 depending therefrom are patentable over the cited references.

New independent claim 45 includes the recitations of independent claim 1 and further recites that the compact tool carrier includes a second linkage pivotally attached to the mainframe and pivotally attached to the loader at a second linkage pivot point. The first linkage is pivotally attached to the loader arm at a first linkage pivot point. The loader is free of cross-members between the first and second linkage pivot points. The compact tool carrier includes an operator platform for standing operation of the operator controls of the control station mounted toward the rear of the compact tool carrier. As shown in Figure 13 of the Mustang Brochure reproduced below, Mustang 2700V includes a cross-member between the first and second linkage pivot points.

Page 13 of the Mustang Brochure

To eliminate or move the cross-member such that the loader is free of cross-members between the first and second linkage pivot points as set forth in claim 45 would affect the performance of the loader and there is no expectation that moving the cross-member as recited in claim 45 would allow the machine to withstand the forces applied during lifting under load. For at least this reason independent claim 45 and claims 46-49 depending therefrom are patentable over the cited references.

New claim 50 includes the recitations of independent claim 1 and further recites that the loader has a first arm, a second arm and at least one cross-member that extends from the first arm to the second arm. The compact tool carrier includes a second linkage pivotally attached to the mainframe and pivotally attached to the loader at a second linkage pivot point. The first linkage is pivotally attached to the loader at a first linkage pivot point and the actuator is pivotally attached to the loader arm at an actuator pivot point. Each cross-member is disposed forward of the first linkage pivot point and the second linkage pivot point. As shown above in page 13 of the Mustang Brochure, the loader of Mustang 2700V includes a cross-member <u>between</u> the first and second linkage pivot points and not forward of these pivot points as recited in claim 50. There is no expectation of success to modify the loader as recited in claim 50 and claim 50 and claims 51-54 depending therefrom are patentable over the cited references for at least this reason.

New claim 55 includes the recitations of independent claim 1 and further recites a drive mechanism comprising tracks for propelling the compact tool carrier over a supporting surface. The drive mechanism has a rotational axis. The compact tool carrier has a bottom at which the drive mechanism contacts the supporting surface. Claim 55 recites a distance D1 from the rotational axis and the bottom of the compact tool carrier and recites a distance D5 from the rotational axis and the bottom of the first side of the mainframe. The rotational axis and the pivot point at which the linkage is attached to the mainframe are separated by a vertical distance D2. The rotational axis and the pivot point at which the actuator is attached to the mainframe are separated by a vertical distance D4. <u>Both D2 and D4 are less than D1 and are less than 1.5 D5</u>. As shown above in Figure L, the distances between the first and second linkages of

Mustang 2700V and the rotational axis are more than D1 (1.53 and 1.29, respectively) and are more than 1.5 D5 (2.73 and 2.09 respectively). Mustang 2700V does not include a linkage with the distance between its pivot point and the rotational axis being less than D1 and less than 1.5 D5. As none of the references disclose use of a linkage with the distance between the rotational axis and the pivot point formed between the linkage and the mainframe being less than D1 and less than 1.5 D5, independent claim 55 and claims 56-63 depending therefrom are patentable over the cited references.

V. CONCLUSION

The Patent Owner respectfully requests reconsideration and allowance of all pending claims. The undersigned request a telephone call from the Examiner if a call might expedite allowance.

The Patent Owner authorizes the Commissioner to charge any fees which may be due in connection with this Amendment to Deposit Account No. 012384 in the name of Armstrong Teasdale LLP.

Respectfully submitted,

/Patrick E. Brennan/

Patrick E. Brennan
Reg. No. 56,511
Armstrong Teasdale LLP
7700 Forsyth Blvd, Suite 1800
St. Louis, Missouri 63105
(314) 621-5070

/Michael J. Vander Molen/

Michael J. Vander Molen
Reg. No. 57,274
ARMSTRONG TEASDALE LLP
7700 Forsyth Blvd., Suite 1800
St. Louis, Missouri 63105
(314) 621-5070

IN THE UNITED STATES PATENT AND TRADEMARK OFFICE

U.S. Patent No. 9,321,386
Inventors: Brad Thomas et al.
Reexamination Control No.: 90/013,915
Filed: February 28, 2017
Confirmation No.: 3754
For: LOW PROFILE COMPACT TOOL CARRIERS
Examiner: William Charles Doerrler
Conferees: Jeffrey Gellner and Gay Spahn

Art Unit: 3993

DECLARATION OF LOUIS HARTKE UNDER 37 C.F.R. 1.132

I, Louis Hartke, declare and state as follows:

1. I am an inventor of the subject matter recited in the claims of U.S. Patent No. 9,321,386 ("the '386 Patent") and the presently pending claims of Reexamination Control No. 90/013,915.

2. I received a Bachelor of Science degree in Agricultural and Biosystems Engineering from North Dakota State University in 1999.

3. I have 18 years of experience in the field of product development, design and engineering including 5 years as a Senior Project Engineer in the area of rental machines including compact tool carriers. I am currently employed by Vermeer Manufacturing Company as a Senior Project Engineer.

4. As an inventor of the '386 Patent, I have read and understand the above-referenced patent and the claims thereof.

5. I have reviewed the brochure entitled "S450TX Mini Skid Steer" (the "S450TX Brochure"), the brochure entitled "Skid Steer Loaders, Radial & Vertical Lift" published by Mustang (the "Mustang Brochure") and the "S450TX Mini Skid Steer Parts Manual" (the "S450TX Parts Manual").

6. The S450TX compact tool carrier shown in the S450TX Brochure was developed by Vermeer Manufacturing Company. When developing the invention claimed in the '386 Patent, I was aware of the S450TX machine and was familiar with its design and operation.

7. I recognized that the mainframe of the S450TX compact tool carrier was specifically designed to accommodate a radial lift loader and would not be able to support a vertical lift loader. The S450TX connects the loader arms to the mainframe high on the machine and lacks sufficient structure toward the lower portion of the mainframe to support a vertical lift loader. The S450TX would be unstable if combined with a vertical lift loader. Thus, I did not nor would one of ordinary skill in the art find it obvious to substitute a vertical lift loader like that of the Mustang Brochure for the radial lift loader on the S450TX at the date of invention of the '386 Patent. In fact, I don't believe the S450TX can successfully be modified to have a vertical lift loader.

8. The field of endeavor of the '386 Patent is unpredictable. Small changes to pivot points, weight distribution, and the like in vertical lift loaders cause significant changes in the lift profile and lift capacity of the machine. The unpredictable nature of these changes is exaggerated in compact utility loaders because of the relatively small mass of the machine and restrictions on where components may be placed.

9. When developing the compact tool carrier that led to the '386 Patent, state of the art tools were used including solid modeling software from

Solidworks, finite element analysis software from ANSYS, in-house programming for evaluation of loading and force analysis, stress coating, strain gauging and cycle test stands. Despite resorting to these state of the art tools, many prototypes failed or were not capable of operation (e.g., were unable to lift under load).

10. By using a linkage and actuator to support the loader (i.e., a vertical lift loader) as set forth in claim 1 of the '386 Patent, the lift capacity of an embodiment of the invention was increased by 32% relative to the radial lift S450TX compact tool carrier without increasing the weight of the machine. The lift capacities were measured in accordance with ISO Standard 14397-1:2007 entitled "Earth-moving Machinery - Loaders and backhoe loaders – Part 1: Calculation of rated operating capacity and test method for verifying calculated tipping load."

11. With reference to Figure 5 of the Mustang Brochure, the Mustang 2700 loader includes two cross-members that extend between the two loader arms.

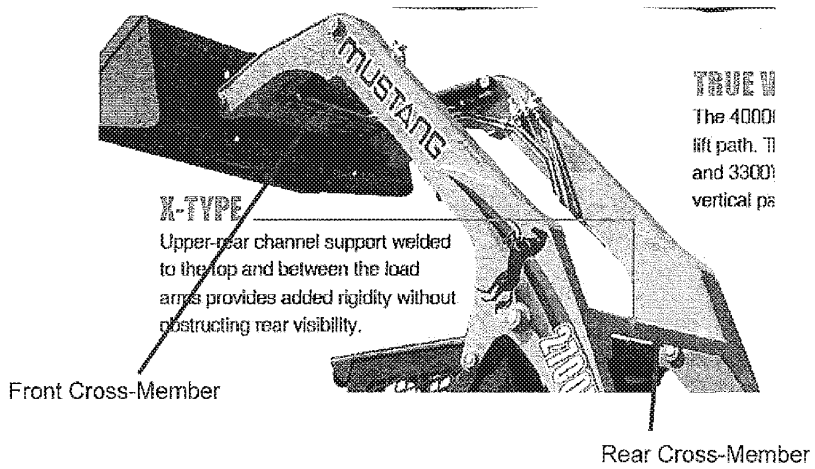

Fig. 5 of Mustang Brochure

12. As shown in the sketch below, the front and rear cross-members of the Mustang 2700V loader allow the loader to behave as a structural "box" in which forces may be distributed side-to-side across the loader.

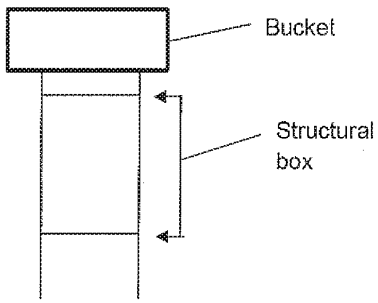

13. If the rear cross-member of Mustang 2700V were eliminated, the behavior of the loader would change significantly because the loader is less able to laterally communicate or absorb the forces applied to the loader across the loader (i.e., from side-to-side).

14. Eliminating or moving the rear cross-member as in embodiments of the compact tool carrier of the '386 Patent increases the complexity in designing the mainframe of the '386 Patent. If the loader of the compact tool carrier of embodiments of the '386 Patent is unevenly loaded, the forces (and structural deflection) induced are transferred much differently through the loader arms and into the mainframe. This different division of forces across the loader is absorbed by the mainframe which increases the complexity in designing the machine.

15. I hereby declare that all statements made herein of my own knowledge are true and that all statements made on information and belief are believed to be true; and further that these statements were made with the knowledge that willful false statements and the like so made are punishable by fine or imprisonment, or both, under 18 U.S.C. §1001, and that such willful false

statements may jeopardize the validity of the instant application or any patent issued thereon.

Louis Hartke

10/25/17
Date

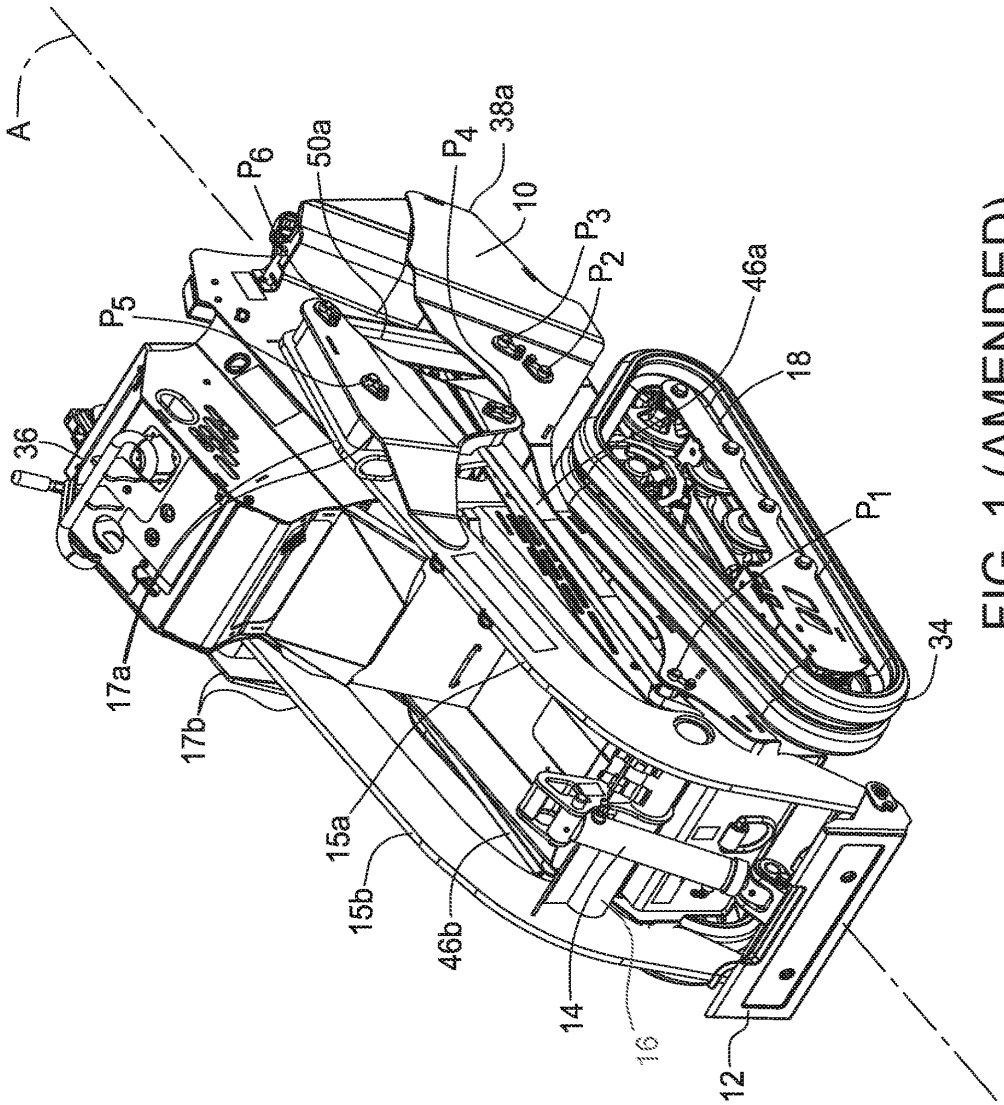

FIG. 1 (AMENDED)

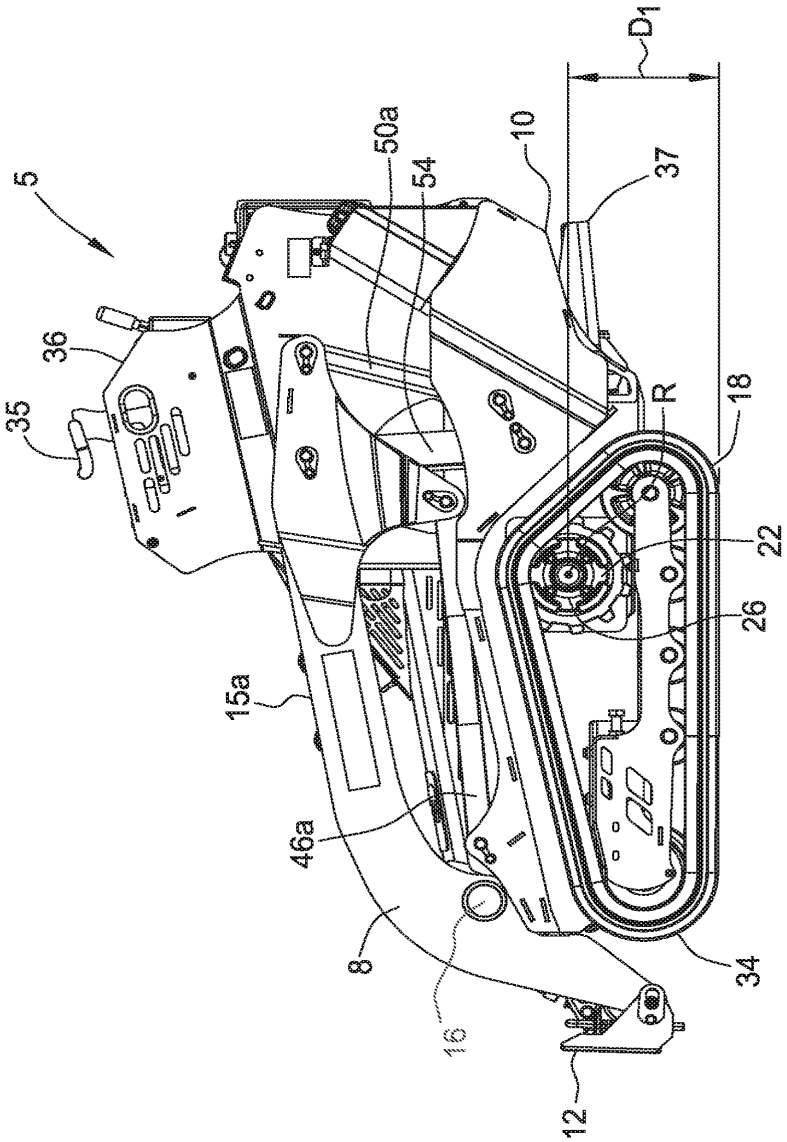

FIG. 2 (AMENDED)

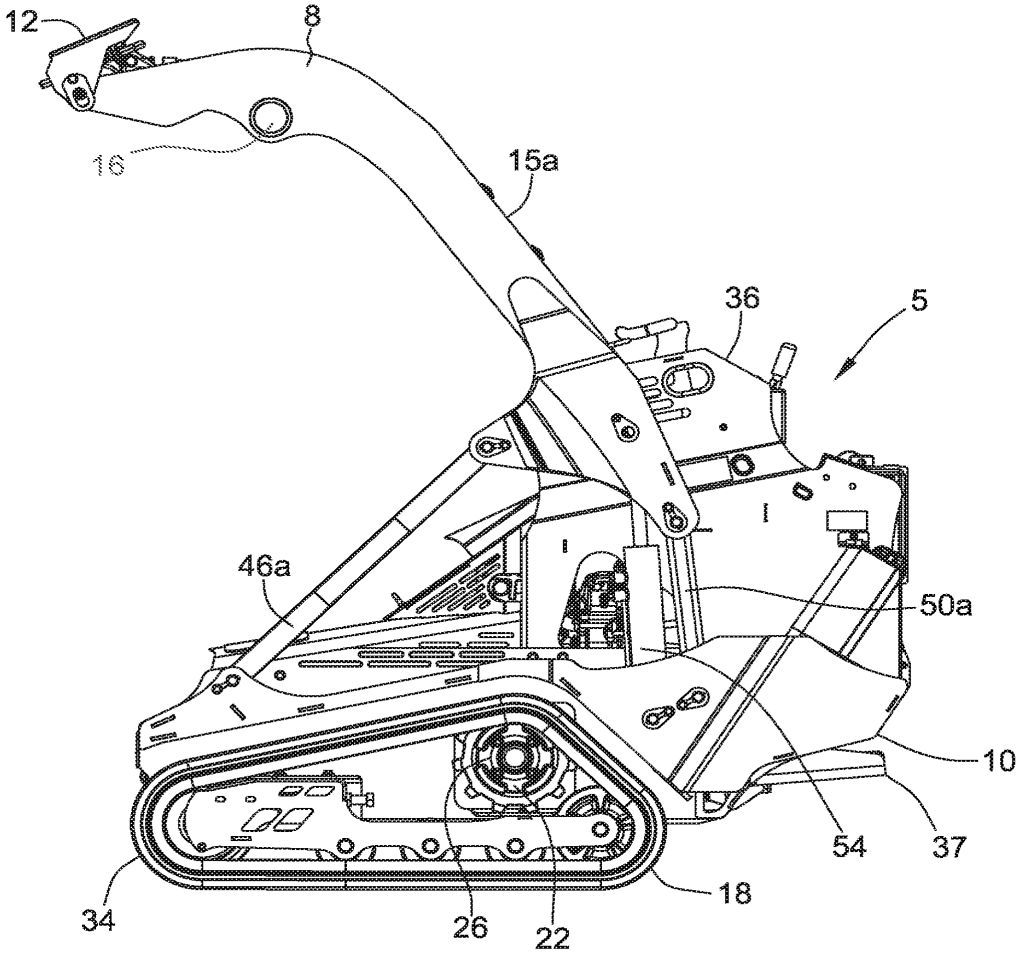

FIG. 3 (AMENDED)

UNITED STATES PATENT AND TRADEMARK OFFICE

UNITED STATES DEPARTMENT OF COMMERCE
United States Patent and Trademark Office
Address: COMMISSIONER FOR PATENTS
P.O. Box 1450
Alexandria, Virginia 22313-1450
www.uspto.gov

APPLICATION NO.	FILING DATE	FIRST NAMED INVENTOR	ATTORNEY DOCKET NO.	CONFIRMATION NO.
90/013,915	02/28/2017	9321386	Vermeer-386Reex	3754

76656 7590 10/20/2017
Patent Docket Department
Armstrong Teasdale LLP
7700 Forsyth Boulevard
Suite 1800
St. Louis, MO 63105

EXAMINER
DOERRLER, WILLIAM CHARLES

ART UNIT	PAPER NUMBER
3993	

MAIL DATE	DELIVERY MODE
10/20/2017	PAPER

Please find below and/or attached an Office communication concerning this application or proceeding.

The time period for reply, if any, is set in the attached communication.

PTOL-90A (Rev. 04/07)

UNITED STATES PATENT AND TRADEMARK OFFICE

Commissioner for Patents
United States Patent and Trademark Office
P.O. Box 1450
Alexandria, VA 22313-1450
www.uspto.gov

DO NOT USE IN PALM PRINTER

(THIRD PARTY REQUESTER'S CORRESPONDENCE ADDRESS)

James W. Miller, Attorney
527 Marquette Avenue
Suite 1960, Rand Tower
Minneapolis, MN 55402

EX PARTE REEXAMINATION COMMUNICATION TRANSMITTAL FORM

REEXAMINATION CONTROL NO. *90/013,915*.

PATENT NO. *9321386*.

ART UNIT *3993*.

Enclosed is a copy of the latest communication from the United States Patent and Trademark Office in the above identified *ex parte* reexamination proceeding (37 CFR 1.550(f)).

Where this copy is supplied after the reply by requester, 37 CFR 1.535, or the time for filing a reply has passed, no submission on behalf of the *ex parte* reexamination requester will be acknowledged or considered (37 CFR 1.550(g)).

/William C Doerrler/
Primary Examiner
Art Unit: 3993

PTOL-465 (Rev.07-04)

Ex Parte Reexamination Interview Summary	**Control No.**	**Patent Under Reexamination**
	90/013,915	9321386
	Examiner	**Art Unit**
	WILLIAM DOERRLER	3993

All participants (USPTO personnel, patent owner, patent owner's representative):

(1) *WILLIAM DOERRLER, Jeff Gellner, Gay Spahn (PTO)*	(3) *Michael Munsell,Fengyu Wang, Jesse Munk (PO reps)*
(2) *Louis Hartke, Matt Hutchison (inventors)*	(4) *Patrick Brennan, Mike Vander Molen (PO rep)*

Date of Interview: *16 October 2017*

Type: a)☐ Telephonic b)☒ Video Conference
c)☐ Personal (copy given to: 1)☐ patent owner 2)☐ patent owner's representative)

Exhibit shown or demonstration conducted: d)☒ Yes e)☐ No.
If Yes, brief description: *A model of a vertical lift tool carrier and a radial lift carrier were demostrated and a powerpoint presentation.*

Agreement with respect to the claims f)☐ was reached. g)☒ was not reached. h)☐ N/A.
Any other agreement(s) are set forth below under "Description of the general nature of what was agreed to…"

Claim(s) discussed: *1*.

Identification of prior art discussed: *Mustang and Vermeer*.

Description of the general nature of what was agreed to if an agreement was reached, or any other comments:
See Continuation Sheet.

(A fuller description, if necessary, and a copy of the amendments which the examiner agreed would render the claims patentable, if available, must be attached. Also, where no copy of the amendments that would render the claims patentable is available, a summary thereof must be attached.)

A FORMAL WRITTEN RESPONSE TO THE LAST OFFICE ACTION MUST INCLUDE PATENT OWNER'S STATEMENT OF THE SUBSTANCE OF THE INTERVIEW. (See MPEP § 2281). IF A RESPONSE TO THE LAST OFFICE ACTION HAS ALREADY BEEN FILED, THEN PATENT OWNER IS GIVEN **ONE MONTH** FROM THIS INTERVIEW DATE TO PROVIDE THE MANDATORY STATEMENT OF THE SUBSTANCE OF THE INTERVIEW (37 CFR 1.560(b)). THE REQUIREMENT FOR PATENT OWNER'S STATEMENT CAN NOT BE WAIVED. **EXTENSIONS OF TIME ARE GOVERNED BY 37 CFR 1.550(c).**

/WILLIAM DOERRLER/ Primary Examiner, Art Unit 3993	conferee: /JLG/ and /GAS/	

cc: Requester (if third party requester)

Continuation of Description of the general nature of what was agreed to if an agreement was reached, or any other comments: Patent owner presented the models and used them to demonstrate the forces at play in the vertical lift model that tend to torque the mainframe and cause one arm to be in compression while the other is being pulled. Also demostrated was the location of the operator and the cross member of the Mustang that is in the rear portion of the arms to reduce torsion and how a similar placement in a rear operator tool carrier will not work as it impedes the operator (both physically and visually). It was agreed that this feature makes the vertical lift of Mustang unsuitable for a compact tool carrier with a rear operator, but it is not clear that this feature has been claimed. PO discussed other differences between vertical and radial lift systems such as weight distribution, engine placement and overall weight. These differences were stated to teach away from adding the vertical lift system of Mustang (which has a central seated operator). PO pointed out that TPR's patent states, "the use of such high lift loader arms on a compact utility loader has been considered difficult if not impossible due to size and durability constraints."

Response to August 25, 2017 Office Action

Reexamination of U.S. Patent No. 9,321,386
Reexamination Control No. 90/013,915

October 16, 2017

Louis Hartke (Inventor), Mike Vander Molen (Reg. No 57,274)
Mike Munsell (Reg. No. 43,820),, Pat Brennan (Reg. No. 56,511)

Order of Presentation

- It would not have been obvious to combine the S450TX with Mustang
  - S450TX cannot Accommodate a Vertical Lift Loader
  - No Expectation of Success
- Objective Evidence of Non-obviousness
  - Toro Admissions

Vermeer

Loader Design involves Difficult Trade-offs

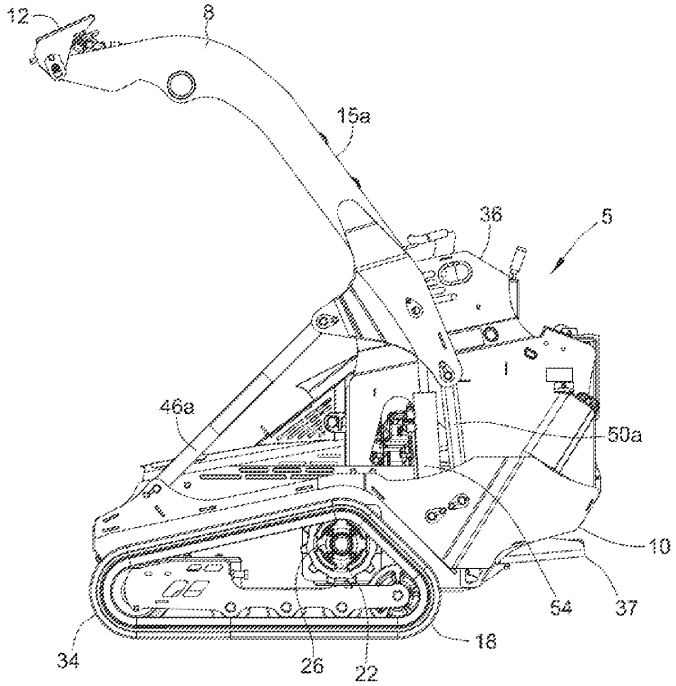

- Total Machine Weight
- Vertical Reach
- Lift Capacity
- Safety
- Structural Difficulties

Vermeer

Vertical Lift Loaders

- The loader is heavier than radial lift loaders
  - ~150 lb difference
  - The weight must be removed from somewhere else on machine (or else performance and durability will suffer)

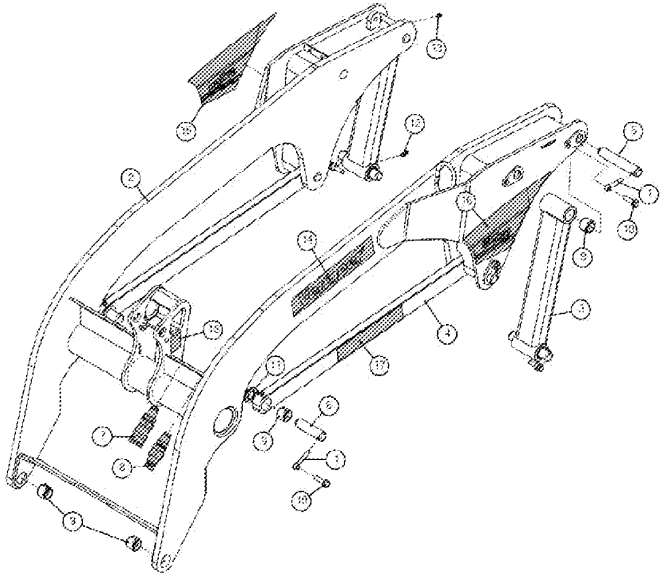

Vermeer

Mainframe Design

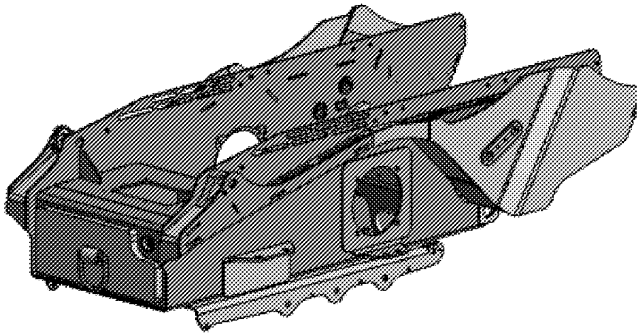

CTX50 (Present Application)

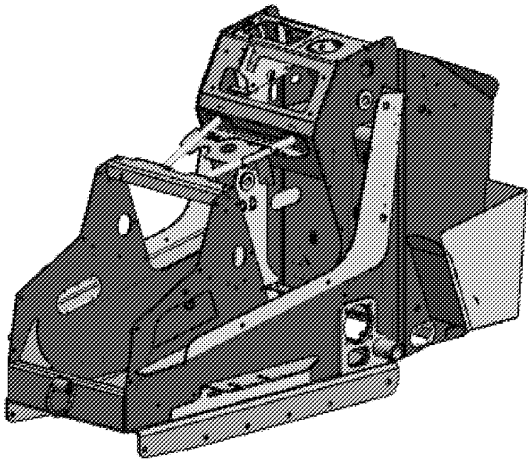

S450TX

Vermeer

The S450TX cannot Accommodate a Vertical Lift Loader

- S450TX mainframe cannot accommodate added weight
- Machine would be top-heavy and unstable
- Weight not distributed properly from front to back
- Mustang loader pivot points do not fit within the profile of the S450TX

Vermeer

Mainframe Design

- The lower portion of the CTX50 mainframe is significantly stiffer

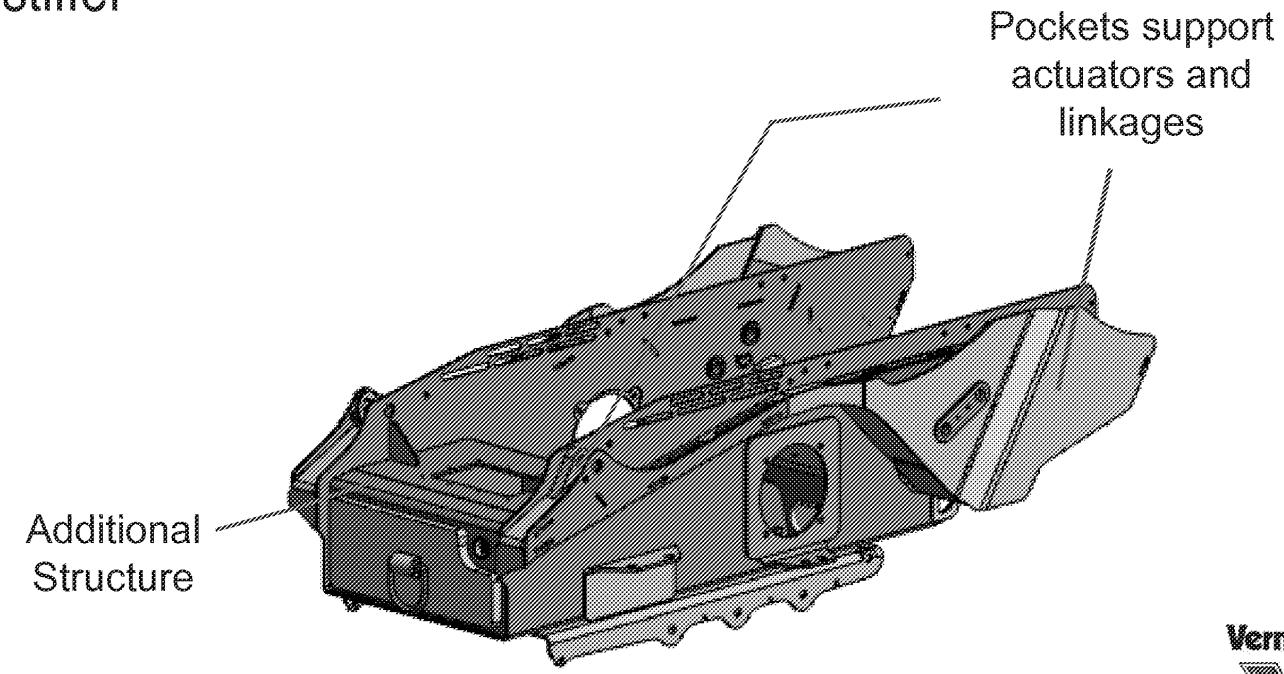

Vermeer

Engine Location

Pivot Point Locations

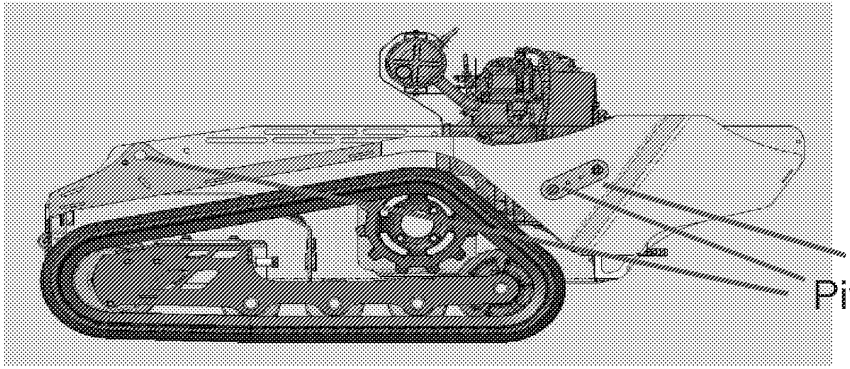

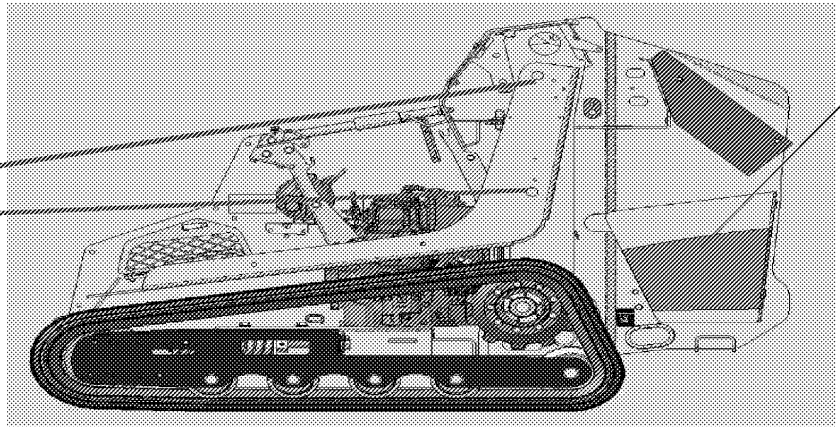

Vermeer

Track Drive Sprocket Location

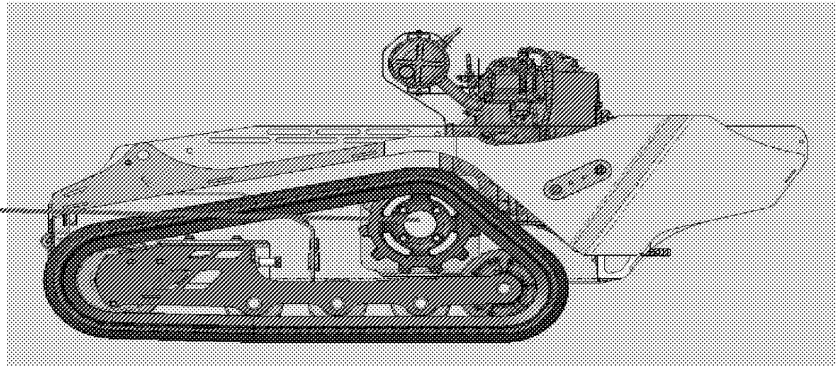

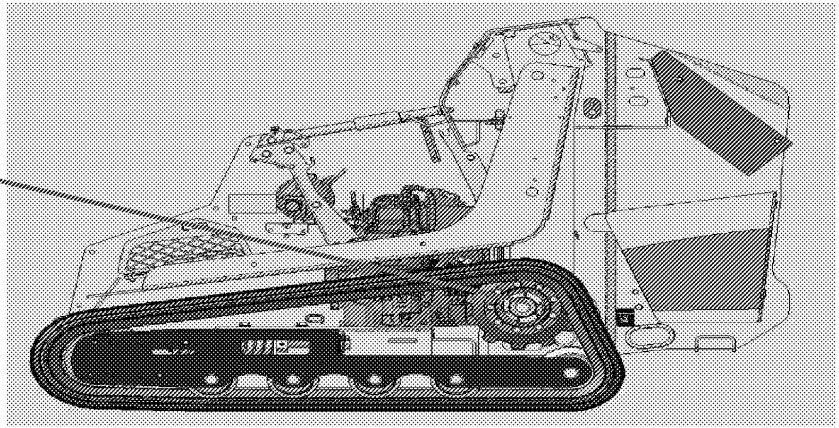

Vermeer

Many Failures Encountered

More than “routine experimentation”

Many Failures Encountered

More than “routine experimentation”

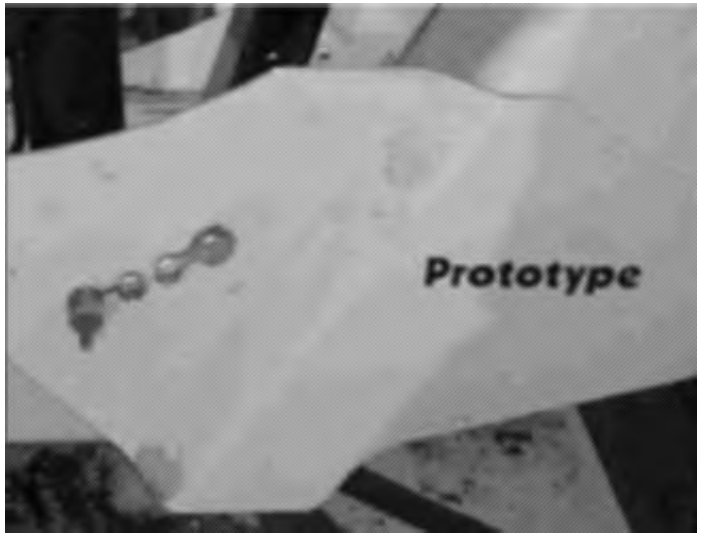

Vermeer

Many Failures Encountered

more than “routine experimentation”

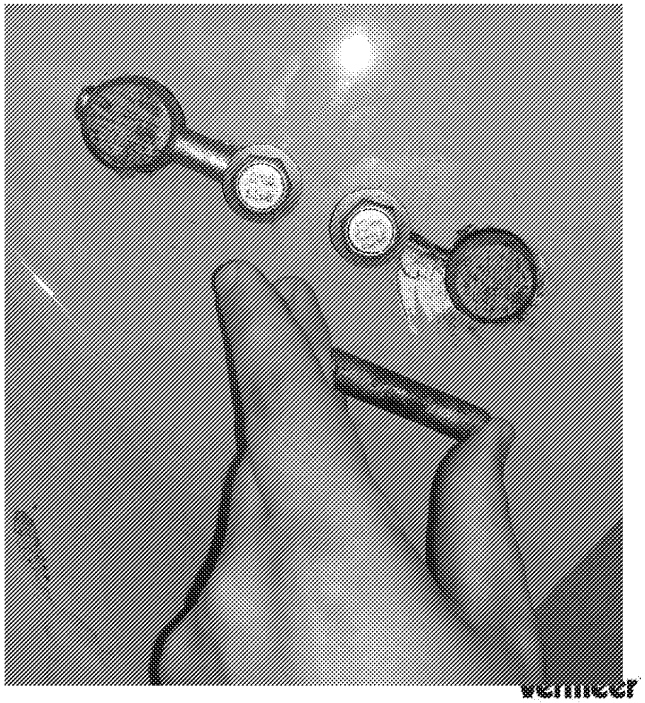

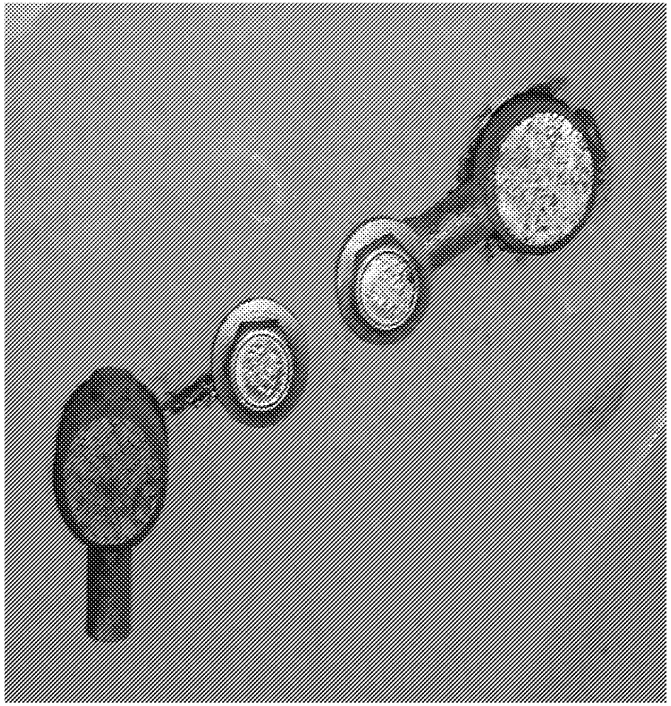

Many Failures Encountered

More than “routine experimentation”

Vermeer

Significant Difference in Scale

Vermeer

There was no Expectation of Success

US 2016/0244937
(Toro application):

"The use of such high lift loader arms on a compact utility loader has been considered ***difficult if not impossible*** due to size . . . "

Vermeer

There was no Expectation of Success

- Window in Mainframe to Position Linkages and Actuator was considered too small for vertical lift

Small Area to Position two Linkages and Actuator that Swing forward and Back

There was no Expectation of Success

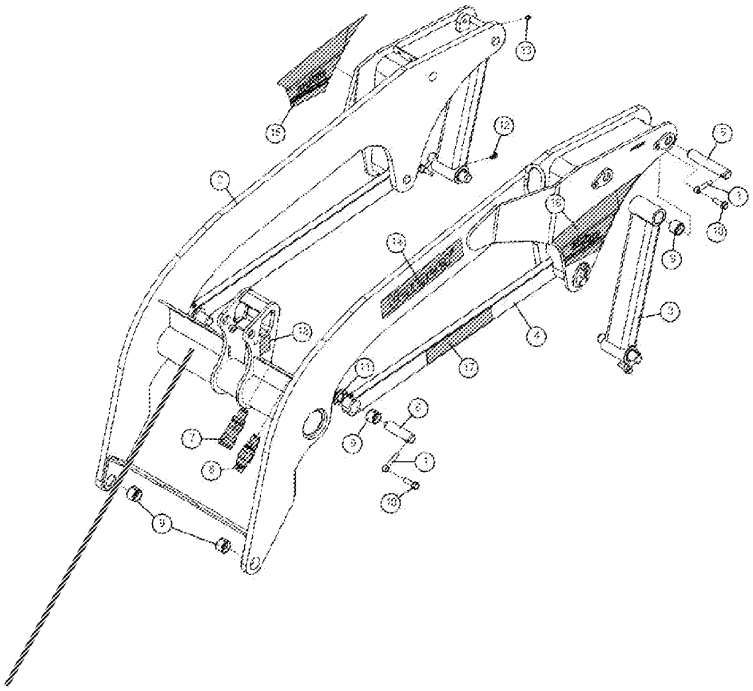

Cross Member

Vermeer

No Expectation of Success Acknowledged by Others

(19) United States
(12) Patent Application Publication
Azure et al.
(10) Pub. No.: US 2016/0244937 A1
(43) Pub. Date: Aug. 25, 2016

(54) UTILITY LOADER WITH HIGH LIFT LOADER ARMS AND UNIFYING HAND GRIP FOR DUAL TRACTION CONTROL LEVERS

(71) Applicant: The Toro Company, Bloomington, MN (US)

(72) Inventors: John E. Azure, Bloomington, MN (US); Joseph C. Knipp, Elko, MN (US); James A. Kuenziger, New Hope, MN (US); David A. Murray, Eagan, MN (US)

(21) Appl. No.: 15/047,861

(22) Filed: Feb. 18, 2016

Related U.S. Application Data

(60) Provisional application No. 62/118,854, filed on Feb. 20, 2015.

Publication Classification

(51) Int. Cl.
E02F 3/34 (2006.01)
E02F 9/20 (2006.01)

(52) U.S. Cl.
CPC E02F 3/3414 (2013.01); E02F 9/2004 (2013.01)

(57) ABSTRACT

A compact utility loader is operated by a standing operator at the rear of a frame. A loader arm assembly comprises a scissors linkage on either side of the frame swinging around the prime mover. Each scissors linkage has an upper loader arm that is pivoted at its rear end to rear ends of a pair of lower loader arms such that the pivot connections to the upper loader arm move upwardly and forwardly relative to the frame during elevation of the loader arm assembly to provide a high lift capability. The frame is self-propelled by a differential drive and steering system that is operated by dual levers. A hand grip extends between and unifies the operation of the levers to permit the operator to move easily move the levers in the ways that are needed to provide either straight motion of the frame or turns of the frame.

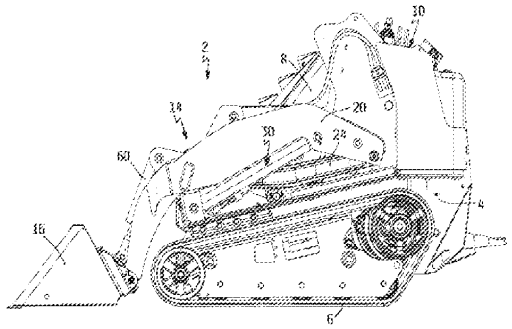

[0007] Finally, the vertical reach of the loader arms on compact utility loaders is somewhat limited. While high lift loader arms are known on full size skid steer loaders as disclosed in U.S. Pat. No. 5,542,814, the use of such high lift loader arms on a compact utility loader has been considered difficult if not impossible due to size and durability constraints. Accordingly, it would be a further advance in the art to provide a way of safely and durably providing high lift loader arms on compact utility loaders to extend the vertical reach of such loaders. For example, this would allow a compact utility loader to dump debris or materials at higher elevations than previously, thus allowing the use of larger trucks to accept such debris or materials for transport.

Vermeer

Objective Evidence of Non-obviousness

EX1029 / Page 171 of 292
Kubota North America Corporation et al

Ex. 2014
Page 171 of 292

Objective Evidence of Non-obviousness

- Long Felt Need
- Attempts by Others
- Unexpected Results
- Commercial Success

Vermeer

Long Felt Need

- Compact Tool Carriers have been commercially available for over 30 years

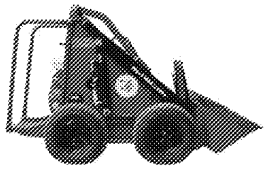

Riga'l Dingo 500
- Developed by regional Australian Manufacturer in 1986
- 250 lb. Rated Operator Capacity

- A consistent problem for Compact Tool Carriers has been the need for increased **lift capacity**

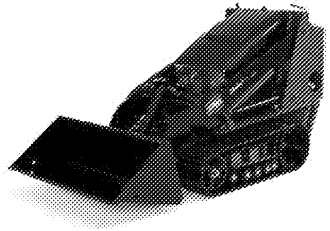

TX420
- First tracked compact utility loader developed in 2000
- 500 lb. Rated Operator Capacity

Vermeer

Long Felt Need

- Trade Journals Recognize the Need:

Construction

EQUIPMENT

Home // Equipment // Earthmoving - Compact // Super Size Your Skid Steer

Super Size Your Skid Steer

As skid steers have increased in size, so has their ability to lift loads and power high-capacity hydraulic attachments. Yet, there are potential drawbacks to upsizing.

Moore has also seen a shift in the size of skid loaders. "There is definitely a slight shift upward," he acknowledges. "Customers are looking for just a little more horsepower, a little more load capacity and machine performance."

The trick is to instill more performance while maintaining a compact package. "The true definition of a skid steer is a compact, powerful and yet nimble machine in most

Vermeer

Attempts to Solve the Problem

- Manufacturers have attempted to increase their advertised lift capacity in numerous ways:
  - Welding weights to back of machine
  - Shifting fuel to the rear to counterbalance loads
  - Redesigned buckets to move loads more rearward
- Each of these modifications had only minimal effects:
  - Only small increase in capacity
  - Detrimental on machine weight and capability

Vermeer

Attempts to Solve the Problem

- Since 2000, domestic market shifted from walk-behind to predominantly ride-on machines
- The added weight from the operator allowed for an increase in lift capacity

	MFG	MODEL	TIP	Design	Boom	HP
2000	Toro	TX420	1480	Walk Behind	Radial	20
	Bobcat	MT50	1500	Walk Behind	Radial	20
	Ditchwitch	SK500	1450	Walk Behind	Radial	25
	Vermeer	S600	1200	Ride On	Radial	25
2005	Vermeer	S600TX	1450	Ride On	Radial	26.5
	Bobcat	MT52	1600	Walk Behind	Radial	23
	Toro	TX525	1580	Walk Behind	Radial	24
	Ditchwitch	SK650	1860	Ride On	Radial	31.5
	Boxer	532DX	2100	Ride On	Radial	32
	Vermeer	S800TX	2400	Ride On	Radial	35
2010	Ditchwitch	SK850	2465	Ride On	Radial	37
	Vermeer	S450TX	1430	Ride On	Radial	25
	Boxer	950HD	2734	Ride On	Radial	48
	Bobcat	MT85	2458	Ride On	Radial	25
2015	Vermeer	CTX50	1715	Ride On	Vertical	25
	Toro	TX1000	3071	Ride On	Vertical	25
	Vermeer	CTX100	2958	Ride On	Vertical	40
2017	Ditchwitch	SK1050	3035	Ride On	Radial	37
	Ditchwitch	SK1550	4451	Ride On	Radial	44

**Models listed in chronological order based on Introduction to the market*

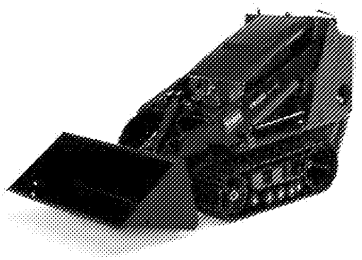

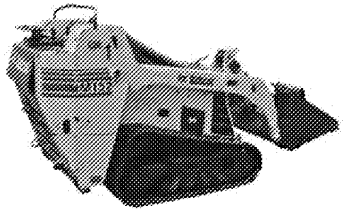

All models now ride on
To incorporate weight of operator in
Tip capacity testing (165 lbs. ISO std)

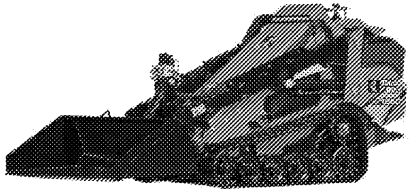

Vermeer

Attempts by Others

- Ditch Witch models include “weight kits”, which add weight to the back of the machine to increase lift capacity
- This added weight sacrifices ground clearance, showing the importance of lift capacity compared to other features

DitchWitch

CONFIDENTIAL

SUGGESTED PRICE LIST
(F.O.B. PERRY, OKLAHOMA)

PART NO.	DESCRIPTION
	LIFT ARM (Optional)
350-4171	LIFT ARM ASSEMBLY
	ORANGE INTEL™ OPTIONS (Select one)
190-2568	GPS ONLY FOR GPS-READY
	Note: Equipment Registration Activates GPS and Telematics Boxes
	ORANGE INTEL™ SERVICE PLAN OPTIONS (Optional)
240-1118	1 Year Data Service Plan GPS ONLY
	Note: Sold in One Year Increments
ACCESSORIES	
190-2628	WEIGHT KIT
190-2196	SK850 UPTIME KIT

“Weight Kit”

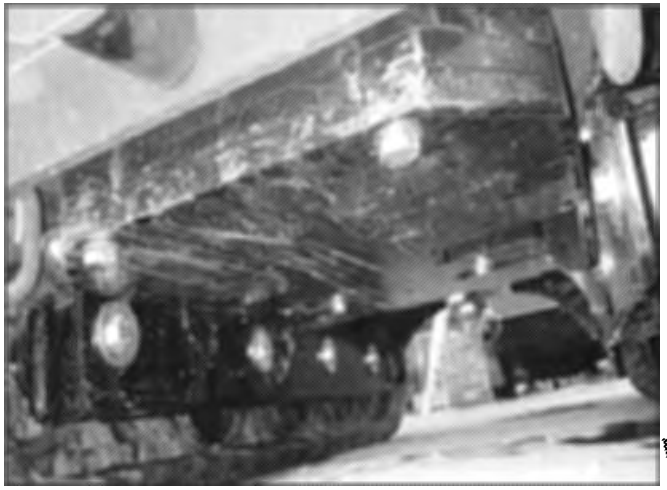

Vermeer

Attempts to Solve the Problem

- For years, customers have added their own counter weights to increase lift capacity
- But, this increases machine weight and provides minimal increased lift capacity

Vermeer

Attempts to Solve the Problem

- Prior art patents teach moving the pivot points closer to the operator to increase lift capacity

The far rear pivot of the lift arms permits using a longer arm on the same length machine. This increases the lift capacity for the same size actuator and there is a longer arc of movement. This means that the bucket or tool moves more vertically as it initially raises, rather that having a pronounced arcuate path that causes the bucket to move forward a significant amount as it starts to lift.

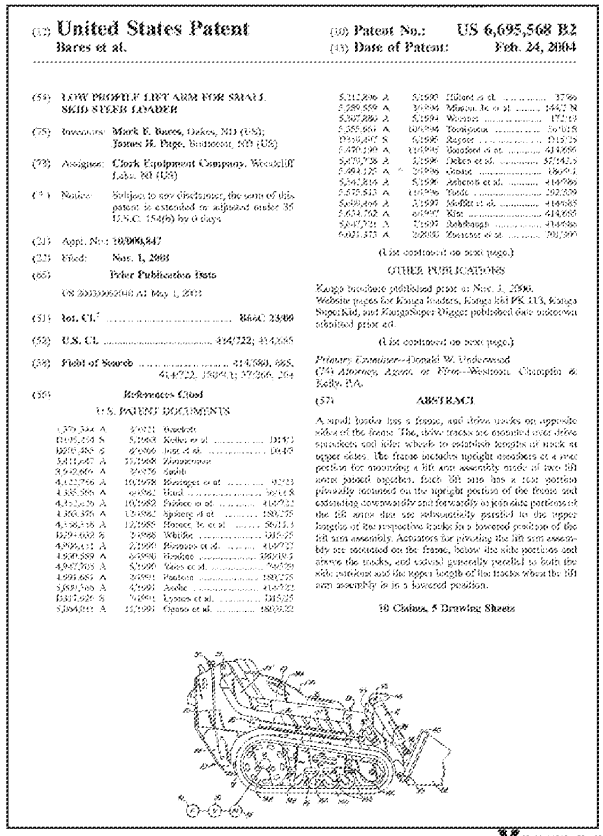

(12) **United States Patent**
Bares et al.

(10) **Patent No.: US 6,695,568 B2**
(45) **Date of Patent: Feb. 24, 2004**

(54) **LOW PROFILE LIFT ARM FOR SMALL SKID STEER LOADER**

(75) Inventors: **Mark E. Bares**, Dakota, ND (US); **James H. Page**, Bismarck, ND (US)

(73) Assignee: **Clark Equipment Company**, Woodcliff Lake, NJ (US)

(*) Notice: Subject to any disclaimer, the term of this patent is extended or adjusted under 35 U.S.C. 154(b) by 0 days.

(21) Appl. No.: **10/006,847**

(22) Filed: **Nov. 1, 2001**

(65) **Prior Publication Data**

US 2003/0082048 A1 May 1, 2003

(51) **Int. Cl.**[7] **B66C 23/00**

(52) **U.S. Cl.** **414/722**; 414/685

(58) **Field of Search** 414/680, 685, 414/722, 723; 37/266, 284

(56) **References Cited**

U.S. PATENT DOCUMENTS

1,379,344	A	5/1921	Sandvik
D195,254	S	5/1963	Kelley et al.
D270,480	S	9/1983	Jost et al.
3,411,647	A	11/1968	Zimmerman
3,542,666	A	11/1970	Smith
4,122,756	A	10/1978	Hostetler et al.
4,338,065	A	6/1982	Hurd
4,415,276	A	11/1983	Fisher et al.
4,556,339	A	12/1985	Spiering et al.
4,596,519	A	12/1985	Hoover et al.
D279,660	S	7/1985	Whitlie
4,906,147	A	2/1990	Peterson et al.
4,949,589	A	8/1990	Hodges
4,967,503	A	11/1990	Gates et al.
4,999,685	A	3/1991	Pinkston
5,030,169	A	7/1991	Jacobs
D317,628	S	7/1991	Lysons et al.
5,084,611	A	11/1992	Quiano et al.
5,212,896	A	5/1993	Hilland et al.
5,289,659	A	3/1994	Mason Jr. et al.
5,307,586	A	5/1994	Wooster
5,355,607	A	10/1994	Thompson
D356,807	S	4/1995	Rapper
5,420,199	A	11/1995	Beaulieu et al.
5,503,236	A	4/1996	Oakes et al.
5,484,125	A	2/1996	Grant
5,561,816	A	8/1996	Anderson et al.
5,575,613	A	11/1996	Wade
5,601,406	A	2/1997	McRae et al.
5,634,762	A	6/1997	Kiss
5,647,721	A	7/1997	Rehkugler
6,021,573	A	2/2000	Wooster et al.

(List continued on next page.)

OTHER PUBLICATIONS

Kanga brochure published prior to Nov. 1, 2000.
Website pages for Kanga Loaders, Kanga 444 PS, 113, Kanga SuperKid, and KangaSuper Digger published date unknown published prior ed.

(List continued on next page.)

Primary Examiner—Donald W. Underwood
(74) *Attorney, Agent, or Firm*—Westman, Champlin & Kelly, P.A.

(57) **ABSTRACT**

A small loader has a frame, and drive tracks on opposite sides of the frame. The drive tracks are mounted over drive sprockets and idler wheels to establish lengths of track at upper sides. The frame includes upright members at a rear portion for mounting a lift arm assembly made of two lift arms pinned together. Each lift arm has a rear portion pivotally mounted on the upright portion of the frame and extending generally and forwardly to join side portions of the lift arms that are substantially parallel to the upper lengths of the respective tracks for a lowered position of the lift arm assembly. Actuators for pivoting the lift arm assembly are mounted on the frame, below the side portions and above the tracks, and extend generally parallel to both the side portions and the upper length of the tracks when the lift arm assembly is in a lowered position.

10 Claims, 5 Drawing Sheets

28

Vermeer

Attempts to Solve the Problem

- Prior art taught pivotal lift arms that move weight over frame to increase lift capacity

A loader has lift arms that are used for mounting a number of different attachments. The attachments can be mounted to the rear of the forward end of the lift arms in order to move the center of gravity of the attachment more directly over the loader frame. Various types of attachments can be used, as shown, and can be controlled to be pivoted for dumping or loading, and can be raised and lowered on the lift arms.

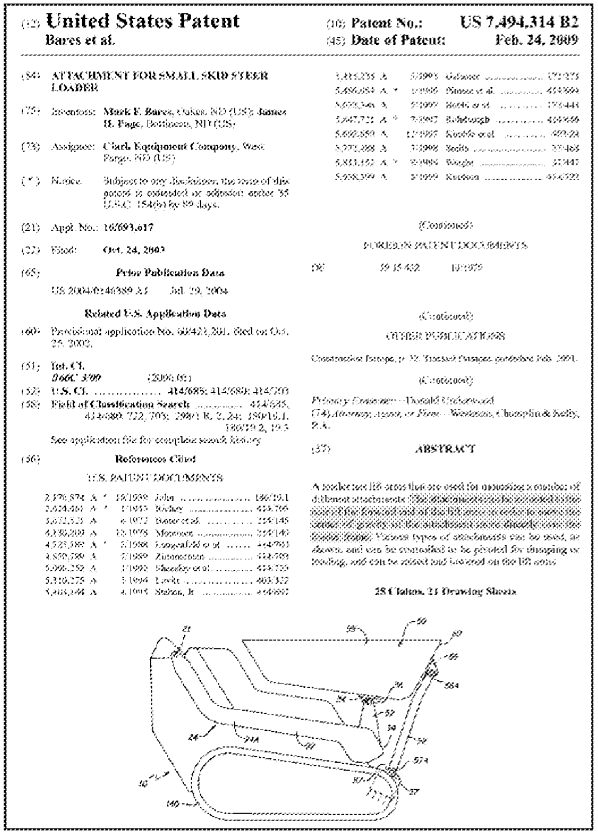

(12) **United States Patent**
Bares et al.

(10) **Patent No.: US 7,494,314 B2**
(45) **Date of Patent: Feb. 24, 2009**

(54) **ATTACHMENT FOR SMALL SKID STEER LOADER**

(75) Inventors: **Mark E. Bares**, Colfax, ND (US); **James B. Page**, Bethesda, MD (US)

(73) Assignee: **Clark Equipment Company**, West Fargo, ND (US)

(*) Notice: Subject to any Disclaimer, the term of this patent is extended or adjusted under 35 U.S.C. 154(b) by 89 days.

(21) Appl. No.: **10/693,017**

(22) Filed: **Oct. 24, 2003**

(65) **Prior Publication Data**

US 2004/0240989 A1 Jul. 29, 2004

Related U.S. Application Data

(60) Provisional application No. 60/421,301, filed on Oct. 25, 2002.

(51) **Int. Cl.**
B66C 3/00 (2006.01)

(52) **U.S. Cl.** **414/686**; 414/680; 414/700

(58) **Field of Classification Search** ..... 414/685, 414/680, 722, 705; 298/1 R, 2, 24; 180/19.1, 180/19.2, 19.3

See application file for complete search history.

(56) **References Cited**

U.S. PATENT DOCUMENTS

2,379,874	A *	10/1939	John	180/19.1
2,624,480	A *	1/1953	Roeder	414/766
3,612,323	A	6/1972	Bonner et al.	254/145
4,836,269	A	12/1978	Mooney	254/140
4,721,399	A *	1/1988	Longenecker et al.	414/703
4,879,789	A	11/1989	Zimmerman	414/709
5,066,252	A	11/1991	Sheesley et al.	414/723
5,319,575	A	5/1994	Lewis	403/322
5,403,144	A	4/1995	Stelzer, Jr.	414/607
5,415,235	A	5/1995	Gilmore	172/273
5,456,054	A *	10/1995	Pinson et al.	414/694
5,555,566	A	9/1996	Bobek et al.	175/445
5,647,721	A *	7/1997	Rubbelke	414/666
5,692,859	A	12/1997	Kiesele et al.	409/24
5,771,488	A	7/1998	Seelig	37/468
5,811,142	A *	9/1998	Wright	37/347
5,938,399	A	8/1999	Knudson	414/723

(Continued)

FOREIGN PATENT DOCUMENTS

DE 39 15 432 11/1979

(Continued)

OTHER PUBLICATIONS

Construction Europe, p. 32, Tractor Champs, published Feb. 2001.

(Continued)

Primary Examiner—Donald Underwood
(74) *Attorney, Agent, or Firm*—Workman, Champlin & Kelly, P.A.

(57) **ABSTRACT**

A loader has lift arms that are used for mounting a number of different attachments. The attachments can be mounted to the rear of the forward end of the lift arms in order to move the center of gravity of the attachment more directly over the loader frame. Various types of attachments can be used, as shown, and can be controlled to be pivoted for dumping or loading, and can be raised and lowered on the lift arms.

28 Claims, 21 Drawing Sheets

Attempts to Solve the Problem

- Despite the strong need for increased lift capacity, not one manufacturer thought to produce a compact tool carrier with vertical lift, <u>until Vermeer's CTX50</u>
- Vermeer's CTX50 **increased lift capacity by 32%**

LIFT MORE. Vertical geometry lift loader arms help provide an ISO-rated operating capacity of 600 lb (272.2 kg).

Vermeer

Unexpected Results

- Vermeer's Machine achieves ***32% greater lift capacity*** than a non-vertical lift model <u>with the same vehicle weight</u>
- This is a surprising result, considering Mustang only achieved a 3.8% increase in lift capacity on its vertical lift model

	Mustang Skid Loaders 2600R	2700V
Lift Capacity increase of only 3.8%	2,600 lbs. (1179)	2,700 lbs. (1225)
	2,760 lbs. (1251)	3,000 lbs. (1361)
	21.5 gal. (81.4)	24.5 gal. (72.7)
	8.0 mph (12.9)	7.4 mph (12)
	11.9 mph (19.2)	11.9 mph (19.2)
Weight	8,200 lbs. (3719)	8,150 lbs. (3697)

Vermeer

Commercial Success

- "Vertical lift" was an immediate success in the compact utility loader market
- Vermeer's CTX50 has been called a "game changer" in the market due to its increased lift capacity from vertical lift

"Innovative Iron Awards" – CompactEquip.com

(http://compactequip.com/features/innovative-iron-awards-toro-vermeer-compact-tool-carriers/attachment/vermeer-compact-tool-carrier/)The Vermeer (http://vermeer.com) CTX50 boasts a 600-lb ISO-rated operating capacity and a tipping capacity of 1,715 lbs due to its vertical-lifting path. The vertical-lift path is designed to keep the load closer to the machine, allowing it to lift more than a similar-sized compact tool carrier with a radial-lift path. A vertical-lift path also provides a higher lift height. These enhancements along with the Vermeer exclusive single pilot-operated joystick and stand-on platform make the CTX50 a game-changer in the rental and landscape market.

Vermeer

Commercial Success

- Toro's TX1000, which incorporates Vermeer's invention, has been praised for its increased lift capacity due to the vertical lift

"We've doubled the capacity of our current loaders." **– Toro**

[0007] Finally, the vertical reach of the loader arms on compact utility loaders is somewhat limited. While high lift loader arms are known on full size skid steer loaders as disclosed in U.S. Pat. No. 5,542,814, the use of such high lift loader arms on a compact utility loader has been considered difficult if not impossible due to size and durability constraints. Accordingly, it would be a further advance in the art to provide a way of safely and durably providing high lift loader arms on compact utility loaders to extend the vertical reach of such loaders. For example, this would allow a com-

Toro's new vertical lift Dingo TX 1000 lays claim to strongest compact utility loader on the market (PHOTOS)

Vermeer

Commercial Success

Toro's 2015 Annual Statement

enjoy a good year. Sales in our compact utility loader product line grew nicely fueled in part by the introduction of our all-new, award-winning Dingo® TX 1000 that boasts an operating capacity exceeding 1,000 pounds to lift more than any compact utility loader on the market.

crete power tools. In fiscal 2015, we introduced the Dingo® TX 1000, which features a higher operating capacity and greater reach height that allows attachments to clear the side of dumpsters or trucks. We also expanded our masonry lineup with the launch of

Vermeer

Commercial Success

INNOVATIVE IRON AWARDS: TORO AND VERMEER COMPACT TOOL CARRIERS

INNOVATIVE IRON AWARDS 2015 | NOVEMBER 2015 PRINT ISSUE | TORO | VERMEER by CSE | on December 28, 2015 | 1 comment | in Compact Tool Carriers, | Like It!

Exploration is the engine that drives innovation, so let's go exploring. Let's search through a year's worth of creative ideas in the off-highway equipment industry and see if we can benchmark the innovative exploration of the American machine market. Over the last 12 months, global manufacturers from Caterpillar to Kubota have released compact machines that have set new standards for power, versatility, efficiency and design. Our editors have traveled across the globe to meet these manufacturers, operate their new products and give detailed reports and opinions both in print and on our website (compactequip.com). We sifted through the hundreds of models and brands released in 2015 and picked 19 units that set the bar for innovation. With this article, we salute those companies (from Komatsu to Case) that have changed the commercial equipment market over the last year with their unique, interesting and innovative machines, engines and technologies.

TORO AND VERMEER BRING A NEW LIFTING PATTERN TO CTCS

Vermeer
EQUIPPED TO
DO MORE.
Vermeer, the Vermeer logo and Equipped to Do More are trademarks of Vermeer Manufacturing Company in the U.S. and/or other countries.
© 2015 Vermeer Corporation. All Rights Reserved.

UNITED STATES PATENT AND TRADEMARK OFFICE

USPTO Automated Interview Request (AIR)

Sep 22 2017

This paper requesting to schedule and/or conduct an interview is appropriate because:

This submission is requested to be accepted as an authorization for this interview to communicate via the internet. Recognizing that Internet communications are not secure, I hereby authorize the USPTO to communicate with the undersigned concerning scheduling of the interview via video conference, instant messaging, or electronic mail, and to conduct the interview in accordance with office practice including video conferencing.

Name(s):
Michael J. Vander Molen

S-signature:
/Michael J Vander Molen/

Registration Number:
57274

U.S. Application Number:
90013915

Confirmation Number:
3754

E-mail Address:
mvandermolen@armstrongteasdale.com

Phone Number:
3149201319

Proposed Time of Interview:
10-16-2017 11:00 AM ET

Prefered Interview Type:
Video Conference

I am the applicant or applicant's representative for this application.

uspto UNITED STATES PATENT AND TRADEMARK OFFICE
PALM-SILVER

UNITED STATES PATENT AND TRADEMARK OFFICE

UNITED STATES DEPARTMENT OF COMMERCE
United States Patent and Trademark Office
Address: COMMISSIONER FOR PATENTS
P.O. Box 1450
Alexandria, Virginia 22313-1450
www.uspto.gov

APPLICATION NO.	FILING DATE	FIRST NAMED INVENTOR	ATTORNEY DOCKET NO.	CONFIRMATION NO.
90/013,915	02/28/2017	9321386	Vermeer-386Reex	3754

76656 7590 08/25/2017
Patent Docket Department
Armstrong Teasdale LLP
7700 Forsyth Boulevard
Suite 1800
St. Louis, MO 63105

EXAMINER
DOERRLER, WILLIAM CHARLES

ART UNIT	PAPER NUMBER
3993	

MAIL DATE	DELIVERY MODE
08/25/2017	PAPER

Please find below and/or attached an Office communication concerning this application or proceeding.

The time period for reply, if any, is set in the attached communication.

PTOL-90A (Rev. 04/07)

UNITED STATES PATENT AND TRADEMARK OFFICE

Commissioner for Patents
United States Patent and Trademark Office
P.O. Box 1450
Alexandria, VA 22313-1450
www.uspto.gov

DO NOT USE IN PALM PRINTER

(THIRD PARTY REQUESTER'S CORRESPONDENCE ADDRESS)

James W. Miller, Attorney
527 Marquette Avenue
Suite 1960, Rand Tower
Minneapolis, MN 55402

EX PARTE REEXAMINATION COMMUNICATION TRANSMITTAL FORM

REEXAMINATION CONTROL NO. *90/013,915*.

PATENT NO. *9321386*.

ART UNIT *3993*.

Enclosed is a copy of the latest communication from the United States Patent and Trademark Office in the above identified *ex parte* reexamination proceeding (37 CFR 1.550(f)).

Where this copy is supplied after the reply by requester, 37 CFR 1.535, or the time for filing a reply has passed, no submission on behalf of the *ex parte* reexamination requester will be acknowledged or considered (37 CFR 1.550(g)).

/William C Doerrler/
Primary Examiner
Art Unit: 3993

PTOL-465 (Rev.07-04)

Office Action in Ex Parte Reexamination	Control No. 90/013,915	Patent Under Reexamination 9321386	
	Examiner WILLIAM DOERRLER	Art Unit 3993	AIA (First Inventor to File) Status Yes

-- The MAILING DATE of this communication appears on the cover sheet with the correspondence address --

a. ☐ Responsive to the communication(s) filed on _____ .
☐ A declaration(s)/affidavit(s) under **37 CFR 1.130(b)** was/were filed on _____.

b. ☐ This action is made FINAL.

c. ☒ A statement under 37 CFR 1.530 has not been received from the patent owner.

A shortened statutory period for response to this action is set to expire 2 month(s) from the mailing date of this letter. Failure to respond within the period for response will result in termination of the proceeding and issuance of an *ex parte* reexamination certificate in accordance with this action. 37 CFR 1.550(d). **EXTENSIONS OF TIME ARE GOVERNED BY 37 CFR 1.550(c).** If the period for response specified above is less than thirty (30) days, a response within the statutory minimum of thirty (30) days will be considered timely.

Part I THE FOLLOWING ATTACHMENT(S) ARE PART OF THIS ACTION:

1. ☐ Notice of References Cited by Examiner, PTO-892.
2. ☒ Information Disclosure Statement, PTO/SB/08.
3. ☐ Interview Summary, PTO-474.
4. ☐ _____.

Part II SUMMARY OF ACTION

1a. ☒ Claims *1,3-13,15-18 and 20* are subject to reexamination.

1b. ☒ Claims *2,14 and 19* are not subject to reexamination.

2. ☐ Claims _____ have been canceled in the present reexamination proceeding.

3. ☐ Claims _____ are patentable and/or confirmed.

4. ☒ Claims *1,3-13,15-18 and 20* are rejected.

5. ☐ Claims _____ are objected to.

6. ☐ The drawings, filed on _____ are acceptable.

7. ☐ The proposed drawing correction, filed on _____ has been (7a) ☐ approved (7b) ☐ disapproved.

8. ☐ Acknowledgment is made of the priority claim under 35 U.S.C. § 119(a)-(d) or (f).

a) ☐ All b) ☐ Some* c) ☐ None of the certified copies have

1 ☐ been received.

2 ☐ not been received.

3 ☐ been filed in Application No. _____ .

4 ☐ been filed in reexamination Control No. _____.

5 ☐ been received by the International Bureau in PCT application No. _____.

* See the attached detailed Office action for a list of the certified copies not received.

9. ☐ Since the proceeding appears to be in condition for issuance of an *ex parte* reexamination certificate except for formal matters, prosecution as to the merits is closed in accordance with the practice under *Ex parte* Quayle, 1935 C.D. 11, 453 O.G. 213.

10. ☐ Other: _____

cc: Requester (if third party requester)

DETAILED ACTION

Notice of Pre-AIA or AIA Status

The present application, filed on or after March 16, 2013, is being examined under the first inventor to file provisions of the AIA.

Reexamination

In order to ensure full consideration of any amendments, affidavits or declarations, or other documents as evidence of patentability, such documents must be submitted in response to this Office action. Submissions after the next Office action, which is intended to be a final action, will be governed by the requirements of 37 CFR 1.116, after final rejection and 37 CFR 41.33 after appeal, which will be strictly enforced.

Extensions of time under 37 CFR 1.136(a) will not be permitted in these proceedings because the provisions of 37 CFR 1.136 apply only to "an applicant" and not to parties in a reexamination proceeding. Additionally, 35 U.S.C. 305 requires that reexamination proceedings "will be conducted with special dispatch" (37 CFR 1.550(a)). Extension of time in *ex parte* reexamination proceedings are provided for in 37 CFR 1.550(c).

The patent owner is reminded of the continuing responsibility under 37 CFR 1.565(a) to apprise the Office of any litigation activity, or other prior or concurrent proceeding, involving Patent No. 9,321,386 throughout the course of this reexamination

proceeding. The third party requester is also reminded of the ability to similarly apprise the Office of any such activity or proceeding throughout the course of this reexamination proceeding. See MPEP §§ 2207, 2282 and 2286.

Patent owner is notified that any proposed amendment to the specification and/or claims in this reexamination proceeding must comply with 37 CFR 1.530(d)-(j), must be formally presented pursuant to 37 CFR 1.52(a) and (b), and must contain any fees required by 37 CFR 1.20(c). See MPEP 2250 (IV) for examples to assist in the preparation of proper proposed amendments in reexamination proceedings.

After the filing of a request for reexamination by a third party requester, any document filed by either the patent owner or the third party requested must be served on the other party (or parties where two or more third party requested proceedings are merged) in the reexamination proceeding in the manner provided in 37 C.F.R. 1.248. See 37 C.F.R. 1.550(f).

Summary of the Proceeding to Date

The Third Party Requester requested reexamination of claims 1,3-13,15-18 and 20 of U.S. Patent No. 9,321,386 (hereinafter "the '386 patent) based upon the following proposed rejections:

1. Claims 1,3-13,15-18 and 20 of the '386 patent are unpatentable under 35 USC 103(a) as obvious over "S450TX Mini Skid Steer", published by Vermeer, copyright 2013 (hereinafter "Vermeer") in view of "Skid Steer Loaders, Radial & Vertical Lift" published by Mustang, copyright 2014 (hereinafter "Mustang");

2. Claims 1,3-13,15-18 and 20 of the '386 patent are unpatentable under 35 USC 103(a) as obvious over Vermeer in view of Mustang and further in view of "S450TX Mini Skid Steer Parts Manual" published by Vermeer, copyright 2012-2013 (hereinafter "Vermeer Parts Manual").

An order mailed April 7, 2017 found an SNQ based on Vermeer in view of Mustang and the Vermeer Parts Manual for claims 1,3-13,15-18 and 20. No SNQ was established for claims 2,14 and 19, so these claims will not be reexamined. Patent Owner waived the right to file a statement under 37 C.F.R. 1.530(b) on May 17, 2017.

Claim Rejections - 35 USC § 103

In the event the determination of the status of the application as subject to AIA 35 U.S.C. 102 and 103 (or as subject to pre-AIA 35 U.S.C. 102 and 103) is incorrect, any correction of the statutory basis for the rejection will not be considered a new ground of rejection if the prior art relied upon, and the rationale supporting the rejection, would be the same under either status.

In the event the determination of the status of the application as subject to AIA 35 U.S.C. 102 and 103 (or as subject to pre-AIA 35 U.S.C. 102 and 103) is incorrect, any correction of the statutory basis for the rejection will not be considered a new ground of rejection if the prior art relied upon, and the rationale supporting the rejection, would be the same under either status.

The following is a quotation of 35 U.S.C. 103 which forms the basis for all obviousness rejections set forth in this Office action:

> A patent for a claimed invention may not be obtained, notwithstanding that the claimed invention is not identically disclosed as set forth in section 102, if the differences between the claimed invention and the prior art are such that the claimed invention as a whole would have been obvious before the effective filing date of the claimed invention to a person having ordinary skill in the art to which the claimed invention pertains. Patentability shall not be negated by the manner in which the invention was made.

This application currently names joint inventors. In considering patentability of the claims the examiner presumes that the subject matter of the various claims was commonly owned as of the effective filing date of the claimed invention(s) absent any evidence to the contrary. Applicant is advised of the obligation under 37 CFR 1.56 to point out the inventor and effective filing dates of each claim that was not commonly owned as of the effective filing date of the later invention in order for the examiner to consider the applicability of 35 U.S.C. 102(b)(2)(C) for any potential 35 U.S.C. 102(a)(2) prior art against the later invention.

Claims 1,3-13,15-18 and 20 is/are rejected under 35 U.S.C. 103 as being unpatentable over Vermeer in view of Mustang and the Vermeer Parts Manual.

Vermeer discloses a tool carrier configured for standing or walk-behind operator control (as shown in the photographs with the operator standing at the rear of the carrier) having a longitudinal axis and a mass of less than 1500 kg (page 2 of Vermeer gives the mass of 961.6 kg). The compact tool carrier comprises a loader having an arm with the loader adapted to carry a tool; a mainframe for supporting the loader; an actuator pivotally attached to a first side of the mainframe and pivotally attached to the loader arm; and a control station having operator controls for propelling the compact tool carrier forward and for raising and lowering the loader, the control station being mounted toward the rear of the compact tool carrier and adapted to allow for standing or walk behind operation. These claimed components are labelled on a photograph from the reference in the figure at the top of page 24 of the request. Vermeer does not show “the loader arm not being directly attached to the mainframe” or “a linkage pivotally

attached to the first side of the mainframe and pivotally attached to the loader arm". Mustang shows a vertical lift loader arm linkage which is not directly connected to the mainframe but instead is attached pivotally to a front and rear linkage which are pivotally connected to the mainframe. See the marked-up figure from Mustang at the top of page 26 of the request. This enables Mustang's device to provide vertical lift, which the reference states provides more reach at full lift height which is optimal for applications that require loading and stacking at high heights and "By keeping the load closer to the machine, lift capacities are increased over radial lift models." While an engine is present in the Vermeer reference, there is no clear showing of the engine bracket that presumably led to the allowance of the claims. However, the "Plate-Kohler Engine Mount" (reference numeral 2 in the figure 7-6 on P1.04) of the Vermeer Parts Manual is a bracket that extends from one side to the other of the mainframe and supports the engine and would be spaced from the rear wall of the mainframe (as the engine shown above the bracket extends further to the rear than the bracket). It would have been obvious from the teaching of Mustang to modify the tool carrier of Vermeer by pivotally attaching the linkage to the mainframe while not directly attaching it to the first side of the mainframe and to pivotally attach the loader arm to the linkage to increase the lift capacity and to enable the lifting of the load to the full lift height and to use an engine bracket to securely mount the engine as taught by the Vermeer Parts Manual.

In regard to claim 3, both Vermeer and Mustang show symmetrical linkages on opposite sides of the mainframe to support the load. In regard to claim 4, the linkages

on opposite sides of the main frame are both powered by separate actuators in both Mustang and Vermeer. In regard to claim 5, Mustang shows wheels and Vermeer shows treads as part of the drive mechanism attached to the mainframe. In regard to claim 6, the Vermeer Parts Manual shows the engine attached to the engine bracket. In regard to claim 7, both Mustang and Vermeer show hydraulic cylinders to actuate the load arms. In regard to claim 8, the Vermeer Parts Manual shows in Fig 10 boom arm (SN 135) that is a single weldment comprising a load arm on each side and a connection arm between them. In regard to claims 9 and 10, Vermeer shows a rear platform for an operator and a control station located above the platform. The reference does not state the height of the controls above the platform or a surface supporting the compact tool carrier. The distance is seen as a matter of design choice. It is further noted that the specification of the '386 patent states (column 4 lines 55-61) that this figure is in accordance with ISO 6682. An ordinary practitioner would design a device to be within industry standards. In regard to claims 11 and 12, Vermeer shows the tool carrier being operated by an operator standing behind the tool carrier and using the controls. In regard to claim 13, Vermeer shows a bucket on the tool carrier.

In regard to claim 15, the annotated figure on page 28 of the request shows that Vermeer shows a compact tool carrier comprising a loader adapted to carry a tool, a mainframe for supporting the loader, the mainframe having a first side and a second side and having a front end and a rear end relative to the longitudinal axis, the first side of the mainframe having at least two pivot points relative to the loader, an actuator pivotally attached to the first side of the mainframe at a pivot point and pivotally

attached to the loader, a drive mechanism comprising tracks for propelling the compact tool carrier over a supporting surface, the drive mechanism being attached to the mainframe about a rotational axis, the compact tool carrier having a bottom at which the drive mechanism contacts the supporting surface, the rotational axis and bottom of the compact tool carrier being separated by a vertical distance D1 and a control station having operator controls for propelling the compact tool carrier forward and for raising and/or lowering the loader, the control station being mounted toward the rear of the compact tool carrier and adapted to allow for standing or walk behind operation. Vermeer does not show “the loader arm not being directly attached to the mainframe” or “a linkage pivotally attached to the first side of the mainframe and pivotally attached to the loader arm”. Mustang shows a vertical lift loader arm linkage which is not directly connected to the mainframe but instead is attached pivotally to a front and rear linkage which are pivotally connected to the mainframe. See the marked-up figure from Mustang at the top of page 26 of the request. The marked-up figure of Mustang found on page 30 of the request establishes that Mustang shows, ”each vertical distance between the rotational axis and a pivot point being less than 1.5 times D1 (the distance separating the rotational axis and the supporting surface) as claimed. This enables Mustang’s device to provide vertical lift, which the reference states provides more reach at full lift height which is optimal for applications that require loading and stacking at high heights and “By keeping the load closer to the machine, lift capacities are increased over radial lift models.” The low pivot points improve the stability of the loader in an extended position. While an engine is present in the Vermeer reference, there is

no clear showing of the engine bracket. However, the “Plate-Kohler Engine Mount” (reference numeral 2 in the figure 7-6 on P1.04) of the Vermeer Parts Manual is a bracket that extends from one side to the other of the mainframe and supports the engine and would be spaced from the rear wall of the mainframe (as the engine shown above the bracket extends further to the rear than the bracket). It would have been obvious from the teaching of Mustang to modify the tool carrier of Vermeer by pivotally attaching the linkage to the mainframe while not directly attaching it to the first side of the mainframe and to pivotally attach the loader arm to the linkage to increase the lift capacity and having each vertical distance between the rotational axis and a pivot point being less than 1.5 times the distance separating the rotational axis and the supporting surface to improve stability and to use an engine bracket to securely mount the engine as taught by the Vermeer Parts Manual. In regard to claim 16, the marked up figure on page 30 of the request shows the required ratio of the distances between the rotational axis and the pivot point. In regard to claim 17, both Vermeer and Mustang show carriers with symmetrical sides, so the pivot distances will be the same on the two sides. The figure on page 30 of the request further shows the claimed relative distance between the axis of rotation and the ground and the rotational axis and the pivot points. In regard to claim 20, Vermeer shows a bucket on the tool carrier.

Any inquiry concerning this communication or earlier communications from the examiner should be directed to WILLIAM DOERRLER whose telephone number is (571)272-4807. The examiner can normally be reached on Monday-Friday 6-30- 4:30.

Examiner interviews are available via telephone, in-person, and video conferencing using a USPTO supplied web-based collaboration tool. To schedule an interview, applicant is encouraged to use the USPTO Automated Interview Request (AIR) at http://www.uspto.gov/interviewpractice.

If attempts to reach the examiner by telephone are unsuccessful, the examiner's supervisor, Eileen Lillis can be reached on (571) 272-6928. The fax phone number for the organization where this application or proceeding is assigned is 571-273-8300.

Information regarding the status of an application may be obtained from the Patent Application Information Retrieval (PAIR) system. Status information for published applications may be obtained from either Private PAIR or Public PAIR. Status information for unpublished applications is available through Private PAIR only. For more information about the PAIR system, see http://pair-direct.uspto.gov. Should you have questions on access to the Private PAIR system, contact the Electronic Business Center (EBC) at 866-217-9197 (toll-free). If you would like assistance from a USPTO Customer Service Representative or access to the automated information system, call 800-786-9199 (IN USA OR CANADA) or 571-272-1000.

/William C. Doerrler/
Primary Examiner
Art Unit 3993

Conferees: /JLG/ and /GAS/

Reexamination	**Application/Control No.** 90013915	**Applicant(s)/Patent Under Reexamination** 9321386
	Certificate Date	**Certificate Number**

Requester Correspondence Address: ☐ **Patent Owner** ☒ **Third Party**

James W. Miller
527 Marquette Avenue
Suite 1960, Rand Tower
Minneapolis, MN 55402

LITIGATION REVIEW ☒	/WCD/ (examiner initials)	03/24/2017 (date)
Case Name		Director Initials
Vermeer Corporation v. The Toro Company		
4:17cv76 US District court -Iowa Southern (open)		GAS for JRC

COPENDING OFFICE PROCEEDINGS	
TYPE OF PROCEEDING	**NUMBER**
1. None	

CERTIFICATE OF SERVICE

I certify that on August 4, 2017, the foregoing INFORMATION DISCLOSURE STATEMENT was served on the third party requester's counsel via first class mail at:

James W. Miller
Registration No. 27,661
Suite 1960 Rand Tower
527 Marquette Avenue
Minneapolis, MN 55402

Respectfully submitted,

/Patrick E. Brennan/
Patrick E. Brennan
Reg. No. 56,511
ARMSTRONG TEASDALE LLP
7700 Forsyth Blvd., Suite 1800
St. Louis, MO 63105
(314) 621-5070

IN THE UNITED STATES PATENT AND TRADEMARK OFFICE

Application of: Brad Thomas et al. Art Unit: 3993
Serial No.: 90/013,915
Filed On: February 28, 2017
Confirmation No.: 3754
For: LOW PROFILE COMPACT TOOL CARRIERS
Examiner: William Charles Doerrler

June 2, 2017

NOTICE OF CONCURRENT PROCEEDINGS

The patent which is the basis of this Reexamination, U.S. Patent No. 9,321,386, is involved in the following litigation:

- *Vermeer Corporation v. The Toro Company*, Case No. 4:17-cv-00076-CRW-HCA (S.D. IA. filed February 28, 2017)

Respectfully submitted,

/Patrick E. Brennan/

Patrick E. Brennan
Reg. No. 56,511
ARMSTRONG TEASDALE LLP
7700 Forsyth Blvd., Suite 1800
St. Louis, Missouri 63105
(314) 621-5070

CERTIFICATE OF SERVICE

I certify that on June 2, 2017, the foregoing NOTICE OF CONCURRENT PROCEEDINGS, was served on the third party requester's counsel via first class mail at:

James W. Miller
Registration No. 27,661
Suite 1960 Rand Tower
527 Marquette Avenue
Minneapolis, MN 55402

Respectfully submitted,

/Patrick. E. Brennan/

Patrick E. Brennan
Reg. No. 56,511
ARMSTRONG TEASDALE LLP
7700 Forsyth Blvd., Suite 1800
St. Louis, MO 63105
(314) 621-5070

CERTIFICATE OF SERVICE

I certify that on June 2, 2017, the foregoing INFORMATION DISCLOSURE STATEMENT, was served on the third party requester's counsel via first class mail at:

James W. Miller
Registration No. 27,661
Suite 1960 Rand Tower
527 Marquette Avenue
Minneapolis, MN 55402

Respectfully submitted,

/Patrick. E. Brennan/

Patrick E. Brennan
Reg. No. 56,511
ARMSTRONG TEASDALE LLP
7700 Forsyth Blvd., Suite 1800
St. Louis, MO 63105
(314) 621-5070

IN THE UNITED STATES PATENT AND TRADEMARK OFFICE

Patent No. 9,321,386 Art Unit: 3993
First Named Inventor: Brad Thomas
Reexamination Control No.: 90/013,915
Filed: February 28, 2017
Confirmation No.: 3754
For LOW PROFILE COMPACT TOOL CARRIERS
Examiner: Doerrler, William Charles

May 17, 2017

WAIVER OF RIGHT TO FILE PATENT OWNER STATEMENT

Patent Owner hereby waives its right under 37 C.F.R. § 1.530(b) to file a Patent Owner Statement.

Respectfully submitted,

/Patrick E. Brennan/

Patrick E. Brennan, Reg. No. 56,511
ARMSTRONG TEASDALE LLP
7700 Forsyth Blvd., Suite 1800
St. Louis, MO 63105
(314) 621-5070

CERTIFICATE OF SERVICE

I certify that on May 17, 2017, the foregoing WAIVER OF RIGHT TO FILE PATENT OWNER STATEMENT, was served on the third party requester's counsel via first class mail at:

James W. Miller
Registration No. 27,661
Suite 1960 Rand Tower
527 Marquette Avenue
Minneapolis, MN 55402

Respectfully submitted,

/Patrick E. Brennan/

Patrick E. Brennan, Reg. No. 56,511
ARMSTRONG TEASDALE LLP
7700 Forsyth Blvd., Suite 1800
St. Louis, MO 63105
(314) 621-5070

UNITED STATES PATENT AND TRADEMARK OFFICE

UNITED STATES DEPARTMENT OF COMMERCE
United States Patent and Trademark Office
Address: COMMISSIONER FOR PATENTS
P.O. Box 1450
Alexandria, Virginia 22313-1450
www.uspto.gov

APPLICATION NO.	FILING DATE	FIRST NAMED INVENTOR	ATTORNEY DOCKET NO.	CONFIRMATION NO.
90/013,915	02/28/2017	9321386	Vermeer-386Reex	3754

76656 7590 04/07/2017
Patent Docket Department
Armstrong Teasdale LLP
7700 Forsyth Boulevard
Suite 1800
St. Louis, MO 63105

EXAMINER
DOERRLER, WILLIAM CHARLES

ART UNIT	PAPER NUMBER
3993	

MAIL DATE	DELIVERY MODE
04/07/2017	PAPER

Please find below and/or attached an Office communication concerning this application or proceeding.

The time period for reply, if any, is set in the attached communication.

PTOL-90A (Rev. 04/07)

UNITED STATES PATENT AND TRADEMARK OFFICE

Commissioner for Patents
United States Patent and Trademark Office
P.O. Box 1450
Alexandria, VA 22313-1450
www.uspto.gov

DO NOT USE IN PALM PRINTER

(THIRD PARTY REQUESTER'S CORRESPONDENCE ADDRESS)

James W. Miller
527 Marquette Avenue
Suite 1960, Rand Tower
Minneapolis, MN 55402

EX PARTE REEXAMINATION COMMUNICATION TRANSMITTAL FORM

REEXAMINATION CONTROL NO. *90/013,915*.

PATENT NO. *9321386*.

ART UNIT *3993*.

Enclosed is a copy of the latest communication from the United States Patent and Trademark Office in the above identified *ex parte* reexamination proceeding (37 CFR 1.550(f)).

Where this copy is supplied after the reply by requester, 37 CFR 1.535, or the time for filing a reply has passed, no submission on behalf of the *ex parte* reexamination requester will be acknowledged or considered (37 CFR 1.550(g)).

/William C Doerrler/

Primary Examiner

PTOL-465 (Rev.07-04)

The present application, filed on or after March 16, 2013, is being examined under the first inventor to file provisions of the AIA.

DECISION ON REQUEST FOR REEXAMINATION

A substantial new question of patentability affecting claims 1,3-13,15-18 and 20 of United States Patent Number 9,321,386 is raised by the request for *ex parte* reexamination.

Extensions of time under 37 CFR 1.136(a) will not be permitted in these proceedings because the provisions of 37 CFR 1.136 apply only to "an applicant" and not to parties in a reexamination proceeding. Additionally, 35 U.S.C. 305 requires that *ex parte* reexamination proceedings "will be conducted with special dispatch" (37 CFR 1.550(a)). Extensions of time in *ex parte* reexamination proceedings are provided for in 37 CFR 1.550(c).

Service of Papers

After the filing of a request for reexamination by a third party requester, any document filed by either the patent owner or the third party requester must be served on the other party (or parties where two or more third party requester proceedings are merged) in the reexamination proceeding in the manner provided in 37 C.F.R. 1.248. See 37 C.F.R. 1.550(f).

Waiver of Right to File Patent Owner Statement

In a reexamination proceeding, Patent Owner may waive the right under 37 C.F.R. 1.530 to file a Patent Owner Statement. The document needs to contain a

statement that Patent Owner waives the right under 37 C.F.R. 1.530 to file a Patent Owner Statement and proof of service in the manner provided by 37 C.F.R. 1.248, if the request for reexamination was made by a third party requester, see 37 C.F.R. 1.550(f). The Patent Owner may consider using the following statement in a document waiving the right to file a Patent Owner Statement:

WAIVER OF RIGHT TO FILE PATENT OWNER STATEMENT
Patent Owner waives the right under 37 C.F.R. 1.530 to file a Patent Owner Statement.

Amendment in Reexamination Proceedings

Patent owner is notified that any proposed amendment to the specification and/or claims in this reexamination proceeding must comply with 37 C.F.R. 1.530(d)-(j), must be formally presented pursuant to 37 C.F.R. 1.52(a) and (b), and must contain any fees required by 37 C.F.R. 1.20(c). See MPEP § 2250(IV) for examples to assist in the preparation of proper proposed amendments in reexamination proceedings.

Submissions

In order to ensure full consideration of any amendments, affidavits or declarations or other documents as evidence of patentability, such documents must be submitted in response to the first Office action on the merits (which does not result in a close of prosecution). Submissions after the second Office action on the merits, which is intended to be a final action, will be governed by the requirements of 37 C.F.R. 1.116, after final rejection and by 37 C.F.R. 41.33 after appeal, which will be strictly enforced.

Notification of Concurrent Proceedings

The patent owner is reminded of the continuing responsibility under 37 C.F.R. 1.565(a) to apprise the Office of any litigation activity, or other prior or concurrent proceeding, involving the patent throughout the course of this reexamination proceeding. Likewise, if present, the third party requester is also reminded of the ability to similarly apprise the Office of any such activity or proceeding throughout the course of this reexamination proceeding. See MPEP §§ 2207, 2282 and 2286.

Notification of Current Assignment of the Patent

The patent owner is requested to provide the current assignment information for the patent for which reexamination is requested. An assignment can be made of record in the file of a patent application, patent, or other patent proceeding (e.g., reexamination proceeding). This step is necessary to permit the assignee to "take action" in the application, patent, or other patent proceeding under the conditions set forth in 37 CFR 3.73 and MPEP § 324. Recordation of an assignment in the assignment records of the Office, however, does **not**, by itself, permit the assignee to take action in the application, patent, or other patent proceeding.

Brief Summary of the Previous Examination

The ‘386 patent issued with 20 claims on April 26, 2016. The patent application (14/691,649) was filed with 20 claims on April 21, 2015. The application claimed priority

from provisional application 62/118,860 filed February 20, 2015. The first Office Action rejected claims 14-19 as anticipated by Yasuda et al. (US 8,821,104), claims 14-16 and 18-20 as anticipated by Green (US 7,695,236) and claims 1-13 and 17 as obvious over Green in view of Valere (US 2009/0116943- with Valere showing a standing platform and a two-armed loader). An October 12, 2015 response amended independent claim 1 by adding "the loader being adapted to carry a tool", "a mainframe for supporting the loader, the mainframe having a first side and a second side, the loader arm not being directly attached to the mainframe" and specifying that the linkage and actuator were both "pivotally attached to the first side of the mainframe" (adding cancelled claim 2 into claim 1). Similar changes were made to independent claim 14 as well as "a control station having operator controls for propelling the compact tool carrier forward and for raising and/or lowering the loader, the control station being mounted toward the rear of the compact tool carrier and adapted to allow for standing or walk-behind operation." Claims 15 and 20 were cancelled and claims 21 and 22 were added, claiming a tool attached to the loader. An October 23, 2015 final rejection rejected claims 1,3-9,11,12,14,16-19,21 and 22 as obvious over Yasuda in view of Bares et al. (US 6,695,568) and claims 10 and 13 were found obvious over Yasuda in view of Bares et al. and further in view of Valere. A December 3, 2015 amendment added claim 23 without cancelling a claim, so an advisory action of December 14, 2015 stated that the amendment was not entered. During a January 15, 2016 interview, the applicant, "described the industry standard difference between a 'compact tool carrier' and a small or compact 'skid steer". The interview summary continues, "The Yasuda et al. patent

(8,821,104) that was used as base reference in the 35 U.S.C. 103 final rejection is directed to a skid steer containing an enclosed cabin (4) that is shielded from the heat produced by the rear mounted engine (101)(see column 27, lines 38-49). In contrast, the tool carrier of the instant invention has a walk-behind operator control disposed at the rear of the carrier. An amendment to claim 1 further defining an engine bracket that is spaced from the rear end of the mainframe (see bracket 60 in Figure 6 of the drawings) would define over the Yasuda et al. patent which requires its engine to be located at the rear of the mainframe away from the cabin (4)." An RCE was filed on January 21, 2016 which amended claim 1 by adding the carrier has a longitudinal axis and adding that the mainframe "having a front end and a rear end relative to the longitudinal axis, the mainframe comprising an engine bracket that extends from the first side toward the second side for mounting an engine to the mainframe, the engine bracket being spaced from the rear end of the mainframe", with similar changes made to claim 14. This amendment led to the February 17, 2016 Notice of Allowability. No reasons for allowance were stated.

Substantial New Question

The Third Party Requester requested reexamination of claims 1,3-13,15-18 and 20 of U.S. Patent No. 9,321,386 (hereinafter "the '386 patent) based upon the following proposed rejections:

1. Claims 1,3-13,15-18 and 20 of the '386 patent are unpatentable under 35 USC 103(a) as obvious over "S450TX Mini Skid Steer", published by Vermeer, copyright 2013 (hereinafter "Vermeer") in view of "Skid Steer Loaders, Radial & Vertical Lift" published by Mustang, copyright 2014 (hereinafter "Mustang");

2. Claims 1,3-13,15-18 and 20 of the '386 patent are unpatentable under 35 USC 103(a) as obvious over Vermeer in view of Mustang and further in view of "S450TX Mini Skid Steer Parts Manual" published by Vermeer, copyright 2012-2013 (hereinafter "Vermeer Parts Manual").

A discussion of the prior art references now follows:

Vermeer is a printed publication that was not cited or considered during the original prosecution and is prior art under 35 U.S.C. 102(a)(1), as its 2013 publication date is at least fourteen months prior to the February 20, 2015 filing of 62/118,860 from which the '386 patent claims priority and at least sixteen months prior to the filing of the '386 patent on April 21, 2015.

Mustang is a printed publication that was not cited or considered during the original prosecution and is prior art under 35 U.S.C. 102(a)(1), as its 2014 copyright date is at least two months prior to the February 20, 2015 filing of 62/118,860 from which the '386 patent claims priority and at least four months prior to the filing of the '386 patent on April 21, 2015.

Vermeer Parts Manual is a printed publication that was not cited or considered during the original prosecution and is prior art under 35 U.S.C. 102(a)(1), as its 2012-2013 copyright date is at least fourteen months prior to the February 20, 2015 filing of 62/118,860 from which the '386 patent claims priority and at least sixteen months prior to the filing of the '386 patent on April 21, 2015.

Discussion of the SNQs based on Vermeer in view of Mustang and the Vermeer Parts Manual

A substantial new question of patentability supports proposed rejections of claims 1,3-13,15-18 and 20 if Vermeer in view of Mustang and further in view of the Vermeer Parts Manual raises a substantial new question of patentability.

It is agreed that Vermeer in view of Mustang and further in view of the Vermeer Parts Manual raises a substantial new question of patentability regarding claims 1,3-13,15-18 and 20 as set forth in the request for reexamination. The '386 patent was presumably allowed after the addition to claim 1 of the mainframe comprising an engine bracket that extends from the first side toward the second side for mounting an engine to the mainframe, the engine bracket being spaced from the rear end of the mainframe. Vermeer appears to disclose a tool carrier configured for standing or walk-behind operator control (as shown in the photographs with the operator standing at the rear of the carrier) having a longitudinal axis and a mass of less than 1500 kg (page 2 of Vermeer gives the mass of 961.6 kg). The compact tool carrier comprises a loader having an arm with the loader adapted to carry a tool; a mainframe for supporting the loader; an actuator pivotally attached to a first side of the mainframe and pivotally attached to the loader arm; and a control station having operator controls for propelling the compact tool carrier forward and for raising and lowering the loader, the control station being mounted toward the rear of the compact tool carrier and adapted to allow for standing or walk behind operation. These claimed components are labelled on a photograph from the reference in the figure at the top of page 24 of the request. Vermeer does not show “the loader arm not being directly attached to the mainframe” or “a linkage pivotally attached to the first side of the mainframe and pivotally attached to

the loader arm". Mustang shows a vertical lift loader arm linkage which is not directly connected to the mainframe but instead is attached pivotally to a front and rear linkage which are pivotally connected to the mainframe. See the marked-up figure from Mustang at the top of page 26 of the request. This enables Mustang's device to provide vertical lift, which the reference states provides more reach at full lift height which is optimal for applications that require loading and stacking at high heights and "By keeping the load closer to the machine, lift capacities are increased over radial lift models." While an engine is present in the Vermeer reference, there is no clear showing of the engine bracket that presumably led to the allowance of the claims. As Vermeer does not show this feature and Mustang is relied upon to show the vertical lift being known, the combination of Vermeer and Mustang cannot be stated to provide a Substantial New Question of Patentability (SNQ) for the '386 patent alone. However, the "Plate-Kohler Engine Mount" (reference numeral 2 in the figure 7-6 on P1.04) of the Vermeer Parts Manual is a bracket that extends from one side to the other of the mainframe and supports the engine and would be spaced from the rear wall of the mainframe (as the engine shown above the bracket extends further to the rear than the bracket). As Vermeer Parts Manual shows an engine bracket that meets the limitations that presumably led to the allowance of claim 1 to be present in the Vermeer S450TX which combined with Mustang shows all of the structural features of the claim, Vermeer in combination with Mustang and the Vermeer Parts Manual present a SNQ for claim 1.

In regard to claim 3, both Vermeer and Mustang show symmetrical linkages on opposite sides of the mainframe to support the load. In regard to claim 4, the linkages

on opposite sides of the main frame are both powered by separate actuators in both Mustang and Vermeer. In regard to claim 5, Mustang shows wheels and Vermeer shows treads as part of the drive mechanism attached to the mainframe. In regard to claim 6, the Vermeer Parts Manual shows the engine attached to the engine bracket. In regard to claim 7, both Mustang and Vermeer show hydraulic cylinders to actuate the load arms. In regard to claim 8, the Vermeer Parts Manual shows in Fig 10 boom arm (SN 135) that is a single weldment comprising a load arm on each side and a connection arm between them. In regard to claims 9 and 10, Vermeer shows a rear platform for an operator and a control station located above the platform. The reference does not state the height of the controls above the platform or a surface supporting the compact tool carrier. The distance is seen as a matter of design choice. It is further noted that the specification of the '386 patent states (column 4 lines 55-61) that this figure is in accordance with ISO 6682. An ordinary practitioner would design a device to be within industry standards. In regard to claims 11 and 12, Vermeer shows the tool carrier being operated by an operator standing behind the tool carrier and using the controls. In regard to claim 13, Vermeer shows a bucket on the tool carrier.

In regard to claim 15, the annotated figure on page 28 of the request shows that Vermeer shows a compact tool carrier comprising a loader adapted to carry a tool, a mainframe for supporting the loader, the mainframe having a first side and a second side and having a front end and a rear end relative to the longitudinal axis, the first side of the mainframe having at least two pivot points relative to the loader, an actuator pivotally attached to the first side of the mainframe at a pivot point and pivotally

attached to the loader, a drive mechanism comprising tracks for propelling the compact tool carrier over a supporting surface, the drive mechanism being attached to the mainframe about a rotational axis, the compact tool carrier having a bottom at which the drive mechanism contacts the supporting surface, the rotational axis and bottom of the compact tool carrier being separated by a vertical distance D1 and a control station having operator controls for propelling the compact tool carrier forward and for raising and/or lowering the loader, the control station being mounted toward the rear of the compact tool carrier and adapted to allow for standing or walk behind operation. Vermeer does not show “the loader arm not being directly attached to the mainframe” or “a linkage pivotally attached to the first side of the mainframe and pivotally attached to the loader arm”. Mustang shows a vertical lift loader arm linkage which is not directly connected to the mainframe but instead is attached pivotally to a front and rear linkage which are pivotally connected to the mainframe. See the marked-up figure from Mustang at the top of page 26 of the request. The marked-up figure of Mustang found on page 30 of the request establishes that Mustang shows, ”each vertical distance between the rotational axis and a pivot point being less than 1.5 times D1 (the distance separating the rotational axis and the supporting surface) as claimed. This enables Mustang’s device to provide vertical lift, which the reference states provides more reach at full lift height which is optimal for applications that require loading and stacking at high heights and “By keeping the load closer to the machine, lift capacities are increased over radial lift models.” The low pivot points improve the stability of the loader in an extended position. While an engine is present in the Vermeer reference, there is

no clear showing of the engine bracket that presumably led to the allowance of the claims. As Vermeer does not show this feature and Mustang is relied upon to show the vertical lift being known, the combination of Vermeer and Mustang cannot be stated to provide a Substantial New Question of Patentability (SNQ) for the '386 patent alone. However, the "Plate-Kohler Engine Mount" (reference numeral 2 in the figure 7-6 on P1.04) of the Vermeer Parts Manual is a bracket that extends from one side to the other of the mainframe and supports the engine and would be spaced from the rear wall of the mainframe (as the engine shown above the bracket extends further to the rear than the bracket). As Vermeer Parts Manual shows an engine bracket that meets the limitations that presumably led to the allowance of claim 15 to be present in the Vermeer S450TX which combined with Mustang shows all of the structural features of the claim, Vermeer in combination with Mustang and the Vermeer Parts Manual present a SNQ for claim 15. In regard to claim 16, the marked up figure on page 30 of the request shows the required ratio of the distances between the rotational axis and the pivot point. In regard to claim 17, both Vermeer and Mustang show carriers with symmetrical sides, so the pivot distances will be the same on the two sides. The figure on page 30 of the request further shows the claimed relative distance between the axis of rotation and the ground and the rotational axis and the pivot points. In regard to claim 20, Vermeer shows a bucket on the tool carrier.

As the above are seen as a new technical teaching applicable to the claims of the '386 patent, a reasonable examiner would find the new teachings of Vermeer,

Mustang and the Vermeer Parts Manual to be important in deciding whether or not claims 1,3-13,15-18 and 20 are patentable. Therefore, Vermeer in view of Mustang and the Vermeer Parts Manual raises a substantial new question of patentability for this reason, and the proposed rejections of claims 1,3-13,15-18 and 20 are supported by a substantial new question of patentability.

Conclusion

As all of the proposed rejections that rely on Vermeer, Mustang and the Vermeer Parts Manual to provide a new technical teaching of tool carrier with a rear control for an operator to sand to the rear of the carrier during operation and a vertical lift assembly with the lift arm not directly attached to the mainframe and an engine bracket that does not extend to the rear wall of the mainframe, and these features are seen as the reason for the allowance of the claims, the request has established a substantial new question of patentability regarding claims 1,3-13,15-18 and 20 of US Patent 9,321,386. The request did not establish a SNQ for claims 2,14 and 19 so these claims will not be part of this reexamination.

All correspondence relating to this *ex parte* reexamination proceeding should be directed:

By EFS: Registered users may submit via the electronic filing system EFS-Web, at https://efs.uspto.gov/efile/myportal/efs-registered.

By Mail to: Mail Stop *Ex Parte* Reexam
Central Reexamination Unit
Commissioner for Patents
United States Patent & Trademark Office
P.O. Box 1450

Alexandria, VA 22313-1450

By FAX to: (571) 273-9900
Central Reexamination Unit

By hand: Customer Service Window
Randolph Building
401 Dulany Street
Alexandria, VA 22314

For EFS-Web transmissions, 37 CFR 1.8(a)(1)(i) (C) and (ii) states that correspondence (except for a request for reexamination and a corrected or replacement request for reexamination) will be considered timely filed if (a) it is transmitted via the Office's electronic filing system in accordance with 37 CFR 1.6(a)(4), and (b) includes a certificate of transmission for each piece of correspondence stating the date of transmission, which is prior to the expiration of the set period of time in the Office action.

Any inquiry concerning the status of this proceeding should be directed to the Central Reexamination Unit at telephone number (571) 272-7705. Any inquiry concerning this communication should be directed to William C. Doerrler at telephone number (571) 272-4807.

Signed:

__/William C. Doerrler/_____

William C. Doerrler
CRU Examiner
GAU 3993
(571) 272-4807

Conferee:__/ple/_____

Conferee:__/EDL/_____

Order Granting Request For Ex Parte Reexamination	Control No. 90/013,915	Patent Under Reexamination 9321386
	Examiner WILLIAM DOERRLER	Art Unit 3993

--The MAILING DATE of this communication appears on the cover sheet with the correspondence address--

The request for *ex parte* reexamination filed *28 February 2017* has been considered and a determination has been made. An identification of the claims, the references relied upon, and the rationale supporting the determination are attached.

Attachments: a)☐ PTO-892, b)☒ PTO/SB/08, c)☐ Other: _____

1. ☒ The request for *ex parte* reexamination is GRANTED.

RESPONSE TIMES ARE SET AS FOLLOWS:

For Patent Owner's Statement (Optional): TWO MONTHS from the mailing date of this communication (37 CFR 1.530 (b)). **EXTENSIONS OF TIME ARE GOVERNED BY 37 CFR 1.550(c).**

For Requester's Reply (optional): TWO MONTHS from the **date of service** of any timely filed Patent Owner's Statement (37 CFR 1.535). **NO EXTENSION OF THIS TIME PERIOD IS PERMITTED.** If Patent Owner does not file a timely statement under 37 CFR 1.530(b), then no reply by requester is permitted.

/WILLIAM DOERRLER/ Primary Examiner, Art Unit 3993		

cc:Requester (if third party requester)

Reexamination	Application/Control No.	Applicant(s)/Patent Under Reexamination
	90013915	9321386
	Certificate Date	Certificate Number
		C1

Requester Correspondence Address: ☐ **Patent Owner** ☒ **Third Party**

James W. Miller
527 Marquette Avenue
Suite 1960, Rand Tower
Minneapolis, MN 55402

LITIGATION REVIEW ☒	/WCD/ (examiner initials)	03/24/2017 (date)
Case Name		Director Initials
Vermeer Corporation v. The Toro Company		
4:17cv76 US District court -Iowa Southern (open)		

COPENDING OFFICE PROCEEDINGS	
TYPE OF PROCEEDING	**NUMBER**
1. None	

UNITED STATES PATENT AND TRADEMARK OFFICE

UNITED STATES DEPARTMENT OF COMMERCE
United States Patent and Trademark Office
Address: COMMISSIONER FOR PATENTS
P.O. Box 1450
Alexandria, Virginia 22313-1450
www.uspto.gov

REEXAM CONTROL NUMBER	FILING OR 371 (c) DATE	PATENT NUMBER
90/013,915	02/28/2017	9321386

CONFIRMATION NO. 3754

REEXAMINATION REQUEST NOTICE

JAMES W. MILLER, ATTORNEY
527 MARQUETTE AVENUE
SUITE 1960, RAND TOWER
MINNEAPOLIS, MN 55402

OC000000089931192

Date Mailed: 03/16/2017

NOTICE OF REEXAMINATION REQUEST FILING DATE

(Third Party Requester)

Requester is hereby notified that the filing date of the request for reexamination is 02/28/2017, the date that the filing requirements of 37 CFR § 1.510 were received.

A decision on the request for reexamination will be mailed within three months from the filing date of the request for reexamination. (See 37 CFR 1.515(a)).

A copy of the Notice is being sent to the person identified by the requester as the patent owner. Further patent owner correspondence will be the latest attorney or agent of record in the patent file. (See 37 CFR 1.33). Any paper filed should include a reference to the present request for reexamination (by Reexamination Control Number).

cc: Patent Owner
76656
Patent Docket Department
Armstrong Teasdale LLP
7700 Forsyth Boulevard
Suite 1800
St. Louis, MO 63105

/rbell/

Legal Instruments Examiner
Central Reexamination Unit 571-272-7705; FAX No. 571-273-9900

UNITED STATES PATENT AND TRADEMARK OFFICE

UNITED STATES DEPARTMENT OF COMMERCE
United States Patent and Trademark Office
Address: COMMISSIONER FOR PATENTS
P.O. Box 1450
Alexandria, Virginia 22313-1450
www.uspto.gov

REEXAM CONTROL NUMBER	FILING OR 371 (c) DATE	PATENT NUMBER
90/013,915	02/28/2017	9321386

CONFIRMATION NO. 3754

REEXAM ASSIGNMENT NOTICE

OC000000089931194

76656
Patent Docket Department
Armstrong Teasdale LLP
7700 Forsyth Boulevard
Suite 1800
St. Louis, MO 63105

Date Mailed: 03/16/2017

NOTICE OF ASSIGNMENT OF REEXAMINATION REQUEST

The above-identified request for reexamination has been assigned to Art Unit 3993. All future correspondence to the proceeding should be identified by the control number listed above and directed to the assigned Art Unit.

A copy of this Notice is being sent to the latest attorney or agent of record in the patent file or to all owners of record. (See 37 CFR 1.33(c)). If the addressee is not, or does not represent, the current owner, he or she is required to forward all communications regarding this proceeding to the current owner(s). An attorney or agent receiving this communication who does not represent the current owner(s) may wish to seek to withdraw pursuant to 37 CFR 1.36 in order to avoid receiving future communications. If the address of the current owner(s) is unknown, this communication should be returned within the request to withdraw pursuant to Section 1.36.

NOTICE OF USPTO EX PARTE REEXAMINATION PATENT OWNER STATEMENT WAIVER PROGRAM

The USPTO has implemented a pilot program where, after a reexamination proceeding has been granted a filing date and before the examiner begins his or her review, the patent owner may orally waive the right to file a patent owner's statement. See *"Pilot Program for Waiver of Patent Owner's Statement in Ex Parte Reexamination Proceedings,"* 75 FR 47269 (August 5, 2010). One goal of the pilot program is to reduce the pendency of reexamination proceedings and improve the efficiency of the reexamination process.

Ordinarily when ex parte reexamination is ordered, the USPTO must wait until after the receipt of the patent owner's statement and the third party requester's reply, or after the expiration of the time period for filing the statement and reply (a period that can be as long as 5 to 6 months), before mailing a first determination of patentability. The USPTO's first determination of patentability is usually a first Office action on the merits or a Notice of Intent to Issue Reexamination Certificate (NIRC).

Under the pilot program, the patent owner's oral waiver allows the USPTO to act on the first determination of patentability immediately after determining that reexamination will be ordered, and in a suitable case issue the reexamination order and the first determination of patentability (which could be a NIRC if the claims under reexamination are confirmed) at the same time.

Benefits to the Patent Owner for participating in this pilot program include reduction in pendency.

To participate in this pilot program, Patent Owners may contact the USPTO's Central Reexamination Unit (CRU) at 571-272-7705. The USPTO will make the oral waiver of record in the reexamination file in an interview summary and a copy will be mailed to the patent owner and any third party requester.

cc: Third Party Requester(if any)
JAMES W. MILLER, ATTORNEY
527 MARQUETTE AVENUE
SUITE 1960, RAND TOWER
MINNEAPOLIS, MN 55402

/rbell/

Legal Instruments Examiner
Central Reexamination Unit 571-272-7705; FAX No. 571-273-9900

Patent Assignment Abstract of Title

Total Assignments: 1

Application #: 14691649 **Filing Dt:** 04/21/2015 **Patent #:** 9321386 **Issue Dt:** 04/26/2016
PCT #: NONE **Intl Reg #:** **Publication #:** NONE **Pub Dt:**
Inventors: Brad Thomas, Louis Hartke, Greg Langenfeld, Matt Hutchinson
Title: LOW PROFILE COMPACT TOOL CARRIERS

Assignment: 1

Reel/Frame: 035676 / 0246 **Received:** 05/20/2015 **Recorded:** 05/20/2015 **Mailed:** 05/21/2015 **Pages:** 10
Conveyance: ASSIGNMENT OF ASSIGNORS INTEREST (SEE DOCUMENT FOR DETAILS).
Assignors: THOMAS, BRAD **Exec Dt:** 05/08/2015
HARTKE, LOUIS **Exec Dt:** 05/05/2015
LANGENFELD, GREG **Exec Dt:** 05/18/2015
HUTCHINSON, MATT **Exec Dt:** 05/04/2015
Assignee: VERMEER MANUFACTURING COMPANY
1210 VERMEER ROAD EAST
PELLA, IOWA 50219
Correspondent: PATENT DOCKET DEPARTMENT ARMSTRONG TEASD
7700 FORSYTH BOULEVARD
SUITE 1800
ST. LOUIS, MO 63105

Search Results as of: 03/01/2017 09:53 AM

If you have any comments or questions concerning the data displayed, contact PRD / Assignments at 571-272-3350. v.2.5
Web interface last modified: Aug 20, 2015 v.2.5

PTO/SB/57 (09-16)
Approved for use through 09/30/2018. OMB 0651-0064
U.S. Patent and Trademark Office; U.S. DEPARTMENT OF COMMERCE
Under the Paperwork Reduction Act of 1995, no persons are required to respond to a collection of information unless it displays a valid OMB control number.

(Also referred to as FORM PTO-1465)

REQUEST FOR *EX PARTE* REEXAMINATION TRANSMITTAL FORM

Address to:
Mail Stop *Ex Parte* Reexam
Commissioner for Patents
P.O. Box 1450
Alexandria, VA 22313-1450

Attorney Docket No.: Vermeer-386Reex

Date: 02/28/2017

1. ☑ This is a request for *ex parte* reexamination pursuant to 37 CFR 1.510 of patent number 9,321,386 issued 04/26/2016. The request is made by:
   ☐ patent owner. ☑ third party requester.
2. ☑ The name and address of the person requesting reexamination is:
   The Toro Company
   8111 Lyndale Avenue South
   Bloomington, MN 55420
3. Requester asserts ☐ small entity status (37 CFR 1.27) or ☐ certifies micro entity status (37 CFR 1.29). Only a patent owner requester can certify micro entity status. Form PTO/SB/15A or B must be attached to certify micro entity status.
4. ☐ a. A check in the amount of $_____ is enclosed to cover the reexamination fee, 37 CFR 1.20(c)(1);
   ☐ b. The Director is hereby authorized to charge the fee as set forth in 37 CFR 1.20(c)(1) to Deposit Account No. _____;
   ☐ c. Payment by credit card. Form PTO-2038 is attached; **or**
   ☑ d. Payment made via EFS-Web.
5. ☑ Any refund should be made by ☐ check or ☑ credit to Deposit Account No. 20-1315. 37 CFR 1.26(c). If payment is made by credit card, refund must be to credit card account.
6. ☑ A copy of the patent to be reexamined having a double column format on one side of a separate paper is enclosed. 37 CFR 1.510(b)(4).
7. ☐ CD-ROM or CD-R in duplicate, Computer Program (Appendix) or large table
   ☐ Landscape Table on CD
8. ☐ Nucleotide and/or Amino Acid Sequence Submission
   If applicable, items a. – c. are required.
   a. ☐ Computer Readable Form (CRF)
   b. Specification Sequence Listing on:
      i. ☐ CD-ROM (2 copies) or CD-R (2 copies); **or**
      ii. ☐ paper
   c. ☐ Statements verifying identity of above copies
9. ☐ A copy of any disclaimer, certificate of correction or reexamination certificate issued in the patent is included.
10. ☑ Reexamination of claim(s) 1, 3-13, 15-18 and 20 is requested.
11. ☑ A copy of every patent or printed publication relied upon is submitted herewith including a listing thereof on Form PTO/SB/08, PTO-1449, or equivalent.
12. ☐ An English language translation of all necessary and pertinent non-English language patents and/or printed publications is included.

This collection of information is required by 37 CFR 1.510. The information is required to obtain or retain a benefit by the public which is to file (and by the USPTO to process) a request for reexamination. Confidentiality is governed by 35 U.S.C. 122 and 37 CFR 1.11 and 1.14. This collection is estimated to take 18 minutes to complete, including gathering, preparing, and submitting the completed application form to the USPTO. Time will vary depending upon the individual case. Any comments on the amount of time you require to complete this form and/or suggestions for reducing this burden, should be sent to the Chief Information Officer, U.S. Patent and Trademark Office, U.S. Department of Commerce, P.O. Box 1450, Alexandria, VA 22313-1450. DO NOT SEND FEES OR COMPLETED FORMS TO THIS ADDRESS. **SEND TO: Mail Stop *Ex Parte* Reexam, Commissioner for Patents, P.O. Box 1450, Alexandria, VA 22313-1450.**
If you need assistance in completing the form, call 1-800-PTO-9199 and select option 2.

Under the Paperwork Reduction Act of 1995, no persons are required to respond to a collection of information unless it displays a valid OMB control number.

13. ☑ The attached detailed request includes at least the following items:

a. A statement identifying each substantial new question of patentability based on prior patents and printed publications. 37 CFR 1.510(b)(1).

b. An identification of every claim for which reexamination is requested, and a detailed explanation of the pertinency and manner of applying the cited art to every claim for which reexamination is requested. 37 CFR 1.510(b)(2).

14. ☐ A proposed amendment is included (only where the patent owner is the requester). 37 CFR 1.510(e).

15. ☑ It is certified that the statutory estoppel provisions of 35 U.S.C. 315(e)(1) or 35 U.S.C. 325(e)(1) do not prohibit requester from filing this *ex parte* reexamination request. 37 CFR 1.510(b)(6).

16. ☑ a. It is certified that a copy of this request (if filed by other than the patent owner) has been served in its entirety on the patent owner as provided in 37 CFR 1.33(c).
The name and address of the party served and the date of service are:
Armstrong Teasdale LLP
7700 Forsyth Boulevard, Suite 1800, St. Louis MO 63105
Date of Service: 02/28/2017; **or**

☐ b. A duplicate copy is enclosed since service on patent owner was not possible. An explanation of the efforts made to serve patent owner **is attached**. See MPEP 2220.

17. Correspondence Address: Direct all communication about the reexamination to:

☑ The address associated with Customer Number: 61145

OR

☐ Firm or Individual Name _____

Address

City	State	Zip
Country		
Telephone	Email	

18. ☐ The patent is currently the subject of the following concurrent proceeding(s):

☐ a. Copending reissue Application No. _____

☐ b. Copending reexamination Control No. _____

☐ c. Copending Interference No. _____

☐ d. Copending litigation styled: _____

WARNING: Information on this form may become public. Credit card information should not be included on this form. Provide credit card information and authorization on PTO-2038.

/James W. Miller/ — Authorized Signature

02/28/2017 — Date

James W. Miller — Typed/Printed Name

27661 — Registration No.

☐ For Patent Owner Requester

☑ For Third Party Requester

Privacy Act Statement

The **Privacy Act of 1974 (P.L. 93-579)** requires that you be given certain information in connection with your submission of the attached form related to a patent application or patent. Accordingly, pursuant to the requirements of the Act, please be advised that: (1) the general authority for the collection of this information is 35 U.S.C. 2(b)(2); (2) furnishing of the information solicited is voluntary; and (3) the principal purpose for which the information is used by the U.S. Patent and Trademark Office is to process and/or examine your submission related to a patent application or patent. If you do not furnish the requested information, the U.S. Patent and Trademark Office may not be able to process and/or examine your submission, which may result in termination of proceedings or abandonment of the application or expiration of the patent.

The information provided by you in this form will be subject to the following routine uses:

1. The information on this form will be treated confidentially to the extent allowed under the Freedom of Information Act (5 U.S.C. 552) and the Privacy Act (5 U.S.C 552a). Records from this system of records may be disclosed to the Department of Justice to determine whether disclosure of these records is required by the Freedom of Information Act.
2. A record from this system of records may be disclosed, as a routine use, in the course of presenting evidence to a court, magistrate, or administrative tribunal, including disclosures to opposing counsel in the course of settlement negotiations.
3. A record in this system of records may be disclosed, as a routine use, to a Member of Congress submitting a request involving an individual, to whom the record pertains, when the individual has requested assistance from the Member with respect to the subject matter of the record.
4. A record in this system of records may be disclosed, as a routine use, to a contractor of the Agency having need for the information in order to perform a contract. Recipients of information shall be required to comply with the requirements of the Privacy Act of 1974, as amended, pursuant to 5 U.S.C. 552a(m).
5. A record related to an International Application filed under the Patent Cooperation Treaty in this system of records may be disclosed, as a routine use, to the International Bureau of the World Intellectual Property Organization, pursuant to the Patent Cooperation Treaty.
6. A record in this system of records may be disclosed, as a routine use, to another federal agency for purposes of National Security review (35 U.S.C. 181) and for review pursuant to the Atomic Energy Act (42 U.S.C. 218(c)).
7. A record from this system of records may be disclosed, as a routine use, to the Administrator, General Services, or his/her designee, during an inspection of records conducted by GSA as part of that agency's responsibility to recommend improvements in records management practices and programs, under authority of 44 U.S.C. 2904 and 2906. Such disclosure shall be made in accordance with the GSA regulations governing inspection of records for this purpose, and any other relevant (*i.e.*, GSA or Commerce) directive. Such disclosure shall not be used to make determinations about individuals.
8. A record from this system of records may be disclosed, as a routine use, to the public after either publication of the application pursuant to 35 U.S.C. 122(b) or issuance of a patent pursuant to 35 U.S.C. 151. Further, a record may be disclosed, subject to the limitations of 37 CFR 1.14, as a routine use, to the public if the record was filed in an application which became abandoned or in which the proceedings were terminated and which application is referenced by either a published application, an application open to public inspection or an issued patent.
9. A record from this system of records may be disclosed, as a routine use, to a Federal, State, or local law enforcement agency, if the USPTO becomes aware of a violation or potential violation of law or regulation.

IN THE UNITED STATES PATENT AND TRADEMARK OFFICE

Attorney Docket No: Vermeer-386Reex

In re Patent of:	)
	)
Brad Thomas et al.	)
	)
Patent No. 9,321,386	)
	)
Issued April 26, 2016	)
	)
For LOW PROFILE COMPACT	)
TOOL CARRIERS	)

DETAILED REQUEST FOR *EX PARTE* PATENT REEXAMINATION

Mail Stop *Ex Parte* Reexam
Commissioner for Patents
P.O. Box 1450
Alexandria, VA 22313-1450

Sir:

Pursuant to 37 CFR §1.510, The Toro Company, the real party in interest and a third party requester, respectfully requests *ex parte* reexamination of claims 1, 3-13, 15-18 and 20 of U.S. Patent 9,321,386, referred to hereafter as "the '386 patent." A Request for *Ex Parte* Reexamination Transmittal Form (PTO/SB/57) is attached hereto.

Table of Contents

I. Statement Pointing Out Each SNQ 3

II. Why the SNQ's Are New Questions 4

III. Detailed Explanation of the Pertinency and Manner of Applying the Patents and Printed Publications to Every Claim for Which Reexamination Is Requested 6

A. Introduction 6

B. The Patent Owner's S450TX Mini Skid Steer 7

C. The CTX50 Mini Skid Steer – A Commercial Embodiment of the '386 Patent 8

D. The S450TX Was Indeed the Platform for the CTX50 of the '386 Patent 10

E. A Review of the Vertical Lift Loader Arm Linkage of the '386 Patent 12

F. A Review of the Prior Art Mustang Vertical Lift Loader Arm Linkage 15

G. Patent Owner Acknowledgment of the Known Advantages of a Vertical Lift 21

H. Ground 1 –Detailed Prior Art Application to Claims 1, 3-13, 15-18 and 20 22

I. Ground 2 –Detailed Prior Art Application to Claims 1, 3-13, 15-18 and 20 31

IV. The Objective Evidence Relating to Obviousness 34

A. Simultaneous Invention Favors a Finding of Obviousness 34

B. No Long Felt But Unmet Need 37

C. No Skepticism by Toro 39

V. No Admissions 42

VI. Conclusions 42

I. Statement Pointing Out Each SNQ

The prior art patents and printed publications relied upon by Toro in this Request raise the following substantial new questions (SNQ's) of patentability and proposed grounds of rejection:

Ground 1. Claims 1, 3-13, 15-18 and 20 of the '386 patent are unpatentable under 35 U.S.C. 103(a) over a printed publication entitled "S450TX Mini Skid Steer", referred to hereafter as "Vermeer" in view of a printed publication entitled "Mustang Skid Steer Loaders – Radial & Vertical Lift", referred to hereafter as "Mustang".

Ground 2. Claims 1, 3-13, 15-18 and 20 of the '386 patent are unpatentable under 35 U.S.C. 103(a) over Vermeer in view of Mustang as applied in Ground 1, and further in view of a printed publication entitled "S450TX Mini Skid Steer Parts Manual", referred to hereafter as "Vermeer Parts Manual".

II. Why the SNQ's Are New Questions

Vermeer and Mustang were not of record during the prosecution of the '386 patent. Vermeer discloses a prior art mini skid steer of the Patent Owner which is clearly the platform from which the mini skid steer of the '386 patent was developed. By comparing the specifications of the mini skid steer set forth in Vermeer to the specifications of the Patent Owner's CTX50 mini skid steer corresponding to the '386 patent, Toro will show that the only significant difference between the two was the simple and entirely obvious substitution of a vertical lift loader arm linkage for the radial lift loader arm linkage of Vermeer. Mustang teaches not only the type of vertical lift loader arm linkage at issue in the '386 patent, including the low placement of various pivots as set forth in claims 15-18 of the '386 patent, but expressly sets forth the reasons for why one of ordinary skill in the art would replace a radial lift loader arm linkage as found on Vermeer with the vertical lift loader arm linkage as taught in Mustang, namely for better forward reach at high lift and to be able to lift heavier loads.

None of the prior art of record taught a mini skid steer as close to that of the '386 patent as Vermeer. None of the prior art of record taught a vertical lift loader arm linkage that is as close structurally to that of the '386 patent as is Mustang or that contains as clear an expression of the rationale or motivation for using such a vertical lift loader arm linkage in place of a radial lift loader arm linkage as does Mustang.

Moreover, in the prosecution of the '386 patent, there were no rejections made that used a mini skid steer corresponding to that of the '386 patent as the primary reference and that modified such primary reference to use a vertical lift loader arm linkage as taught in a larger skid steer having a seated operator and a rear engine. The Final Rejection dated October 23, 2015 posited the reverse - that it would have been obvious in a larger skid steer having a seated operator and a rear engine and equipped with a vertical lift loader arm linkage to utilize a control station for a standing operator at the rear (the Yasuda in view of Bares combination). In Amendment C dated January 21, 2016, the Patent Owner argued essentially that this modification would put the operator too close to the rear mounted engine. The Examiner agreed and allowed the application in response to Amendment C.

Significantly, the Examiner made no rejection in the prosecution of the '386 patent similar to the one proposed herein, namely to use a mini skid steer as the primary reference (Vermeer herein) and to modify it using a secondary reference that uses use a vertical lift loader

arm linkage as taught in a skid steer with a seated operator (Mustang herein) to achieve the advantages that were known to be provided by a vertical lift loader arm linkage (as clearly expressed by Mustang). Accordingly, this Reexam Request clearly raises a SNQ that was not considered by the PTO during the original prosecution of the '386 patent.

III. Detailed Explanation of the Pertinency and Manner of Applying the Patents and Printed Publications to Every Claim for Which Reexamination Is Requested

A. Introduction

In 2012, only three years before the filing date of the patent application that led to the '386 patent at issue herein, the Patent Owner announced the introduction of a new mini skid steer loader named the S450TX. As Toro will prove below, the Patent Owner's existing S450TX became the platform for the alleged invention disclosed and claimed in the '386 patent. The only significant difference between the two was the replacement of the radial lift loader arm linkage found on the S450TX with a substitute that was well known in the skid steer loader art, namely with a vertical lift loader arm linkage. As Toro will further prove below, such a replacement would have been an entirely obvious substitution to a person of ordinary skill in the skid steer loader art at the time of the alleged invention of the '386 patent.

The '386 patent and its prosecution history attempt to distinguish the smaller mini skid steer loader of the '386 patent, in which the operator stands on a platform at the rear of the vehicle and the engine is forward of the operator, from its larger skid steer loader brethren, in which the operator sits on a seat of the vehicle and the engine is rearward of the operator, by referring to the mini skid steer of the '386 patent as a "compact tool carrier". There is no bright line separating larger skid steer loaders having seated operators from mini skid steer loaders having stand-on or walk behind operators. All skid steer loaders, whether large or small, use the same type of skid steer traction drives, use the same types of attachments for the loader arms to perform the same types of work, and face the same types of problems in performing such work, e.g. how to lift high enough, reach far enough, and get close enough to dump dirt into a dump truck or the like while maintaining stability.

However, what is equally if not more telling is that the Patent Owner has in the real world never referred to its stand on loaders of the type disclosed in the '386 patent as "compact tool carriers". Instead, in the real world, the Patent Owner has named them according to what everyone knows they are, namely as "mini skid steers". The Patent Owner further did not disclose this naming discrepancy or any information concerning its "mini skid steer" line to the PTO during the prosecution of the '386 patent.

B. <u>The Patent Owner's S450TX Mini Skid Steer</u>

Toro is submitting herewith a Spec Sheet of the Patent Owner entitled "S450TX Mini Skid Steer" published by the Patent Owner in 2013, which publication is being referred to herein as "Vermeer", disclosing the Patent Owner's tracked, S450TX mini skid steer loader. The photograph reproduced below from Vermeer illustrates the S450TX. ('Vermeer, p. 1). Toro has added various labels with reference numerals to the photograph to point out relevant features of the S450TX.

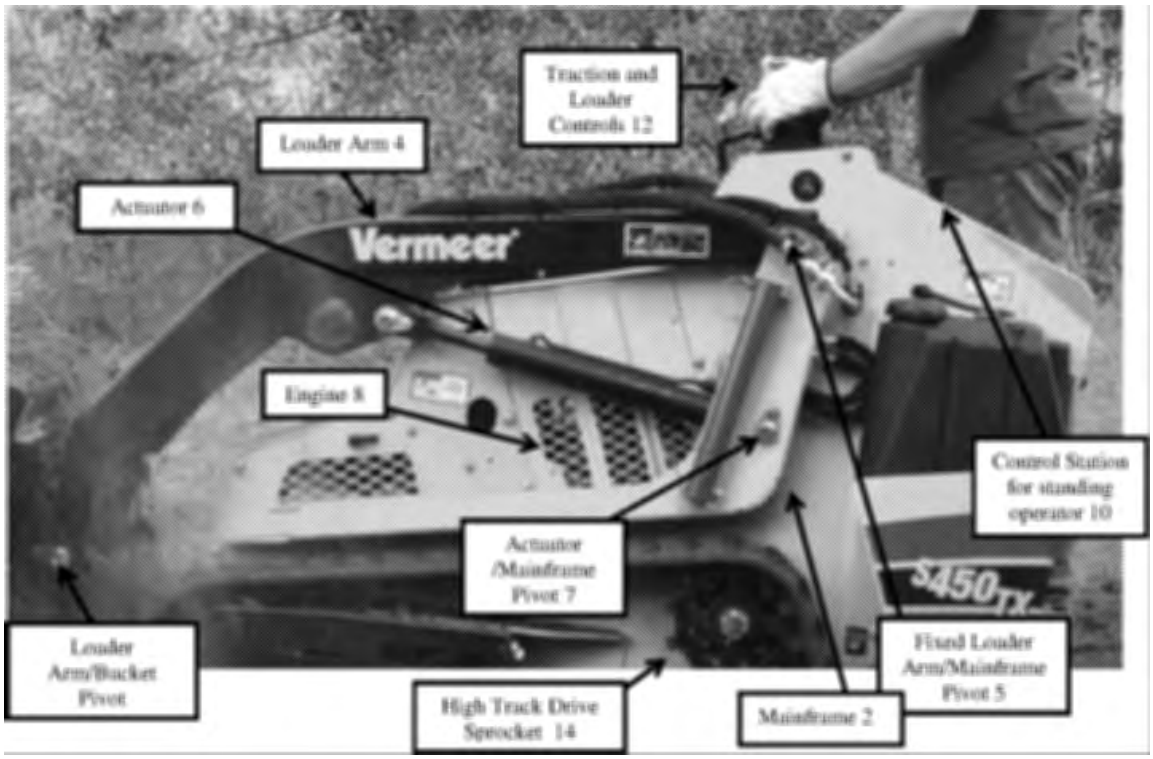

As is clear from the photograph above, the S450TX is a mini skid steer loader in which the operator is carried in a standing position in a control station 10 at the rear of the mainframe 2 with all of the traction and loader controls 12 located directly in front of the standing operator. As a consequence of the rearward placement of control station 10, the engine 8 is moved forwardly on mainframe 2 to a location appreciably forward of the rear end of mainframe 2. This engine placement is evidenced in Vermeer in the photograph above by the location of the vented or screened side shielding for dissipating heat from engine 8. Vermeer expressly discloses that this side shielding is removable to provide access to the engine through the sides of the loader and not from the rear. ('Vermeer, p. 1, photograph entitled "Serviceability Is Key" and its corresponding caption).

The S450TX disclosed in the photograph above employs a typical radial lift loader arm linkage. The rear end of the loader arm has a fixed pivot connection to the mainframe about which the loader arm pivots while the front end of the loader arm has a pivot connection to the load carrying bucket. As the piston rod of the actuator is extended or retracted to raise or lower the loader arm, the loader arm/bucket pivot necessarily travels along a circular arc determined by the radius between the two pivots. This travel along a circular arc is what gave rise to the "radial lift" name given by the art to this type of loader arm linkage. While the photograph above shows only the radial lift linkage on the left side of the S450TX, one of ordinary skill in the art would understand from this that there is an identical radial lift linkage on the right side of the S450TX.

C. <u>The CTX50 Mini Skid Steer – A Commercial Embodiment of the '386 Patent</u>

Toro is submitting herewith a Spec Sheet of the Patent Owner entitled "CTX50 Mini Skid Steer", hereafter referred to as the "CTX50 Spec Sheet", to prove that the Patent Owner commercialized the mini skid steer disclosed in the '386 patent in the CTX50 product introduced by the Patent Owner in 2016. The CTX50 Spec Sheet is not being submitted as prior art because it admittedly does not predate the filing date of the patent application that led to the '386 patent. Rather, the CTX50 Spec Sheet is being submitted to allow Toro to make a comparison in the next section of this Reexamination Request between the specifications of the prior art S450TX disclosed in Vermeer and the specifications of the CTX50. This comparison will prove Toro's earlier assertion that the S450TX was the platform used to develop the alleged invention

disclosed and claimed in the '386 patent, and to allow any significant differences between the two to be more clearly identified and visualized as part of the patentability analysis.

The correspondence between the CTX50 and what is shown and claimed in the '386 patent need not be made in words but merely by showing the two together. The photograph of the CTX50 is taken from the top of page 1 of the CTX50 Spec Sheet. The black and white line drawing is Fig. 2 of the '386 patent. Even though the loader arms in the photograph of the CTX50 are slightly elevated rather than being fully lowered, the two are clearly the same. Given such identity, it is appropriate to compare the prior art to the commercial embodiment.

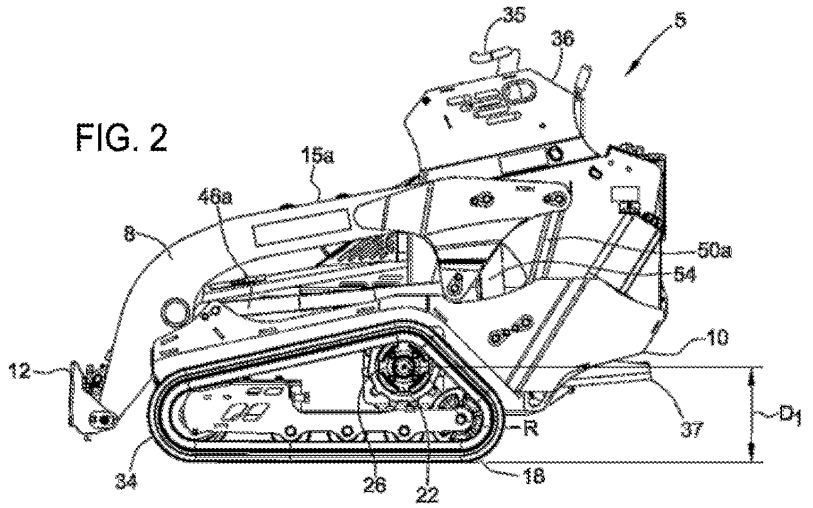

D. The S450TX Was Indeed the Platform for the CTX50 of the '386 Patent

A side-by-side comparison of various specifications for the prior art S450TX ('Vermeer, p. 2) to the corresponding specifications for the CTX50 ('CTX50 Spec Sheet, p. 2) is set forth below. This comparison will prove that the most fundamental specifications as to product size and engine are, for all intents and purposes, identical between the two. The product size and engine specifications have been highlighted in yellow in each specification list.

S450TX MINI SKID STEER

GENERAL

Length (basic unit): 75.4" (191.5 cm)
Width (basic unit): 35.75" (90.8 cm)
Weight (gas unit): 2120 lb (961.6 kg)
Weight (diesel unit): 2300 lb (1043.3 kg)
Height (to hinge pin): 72" (182.9 cm)
Ground clearance: 6.5" (16.5 cm)

ENGINE – OPTION 1

Make and model: Kubota D902
Fuel type: Diesel
Fuel tank capacity: 7.5 gal (28.4 L)
Gross horsepower: 24.8 hp (18.2 kW)
Cooling system: Liquid

ENGINE – OPTION 2

Make and model: Kohler Command PRO EFI ECH740
Fuel type: Gas
Fuel tank capacity: 7.5 gal (28.4 L)
Gross horsepower: 25 hp (18.6 kW)
Cooling system: Air

CTX50 MINI SKID STEER

GENERAL

Length: 75" (190.5 cm)
Width: 35.5" (90.2 cm)
Height: 54.5" (138.4 cm)
Weight: 2100 lb (952.5 kg)
Hinge pin height: 72" (182.9 cm)
Ground clearance: 6" (15.2 cm)
Ground pressure: 4.5 psi (31 kPa)

ENGINE

Make/Model: Kohler Command PRO EFI ECH740
Gross horsepower: 25 hp (18.6 kW)
Torque (max): 38.8 ft-lb (52.6 Nm)
Displacement: 45 cu in (.74 L)
Fuel type: Gasoline
Fuel tank capacity: 4 gal (15.1 L)
Number of cylinders: V-twin
Cooling medium: Air
[illegible]
[illegible]

As highlighted above, the S450TX and CTX50 have essentially the same length (**191.5 cm versus 190.5 cm** – a difference of 1.0 cm which is less than a 1% difference), the same width (**90.8 cm versus 90.2 cm** – a difference of 0.6 cm which is less than a 1% difference), and the same weight (**961.6 kg versus 952.5 kg** – a difference of 9.1 kg which is less than a 1%

difference).[1] Clearly, the mini skid steer of the alleged invention of the '386 patent was developed using the S450TX as the template for the proper size. In addition, the S450TX and CTX50 use the same engine, the Kohler Command PRO EFI ECH740 having exactly the same power (**25 hp versus 25 hp** – no difference). Thus, **NO** additional size, **NO** additional weight, and **NO** additional power was needed to convert the radial lift S450TX mini skid steer loader into the vertical lift CTX50 mini skid steer loader.

Many other points of identity exist between the S450TX and the CTX50. Vermeer and the CTX50 Spec Sheet have captioned photographs shown side-by-side below illustrating and describing **identica**l traction drives and operational controls.

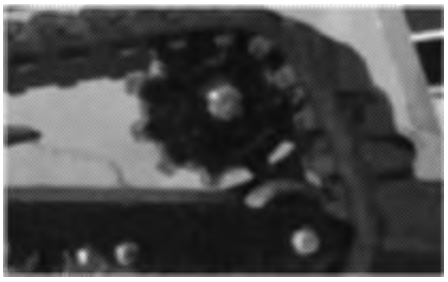

LOWER YOUR COST OF OPERATION. The undercarriage features a high track-mounted sprocket. The higher mounting reduces premature wear and tear in rocky soil conditions, while the ADI cast sprocket is heat-treated for longer life.

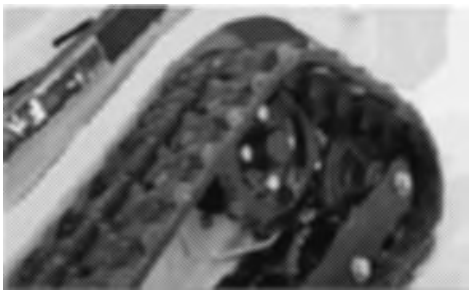

LOWER YOUR COST OF OPERATION. The undercarriage features a high-mounted track sprocket. The higher mounting reduces premature wear and tear in rocky soil conditions, while the cast sprocket is heat-treated for longer life.

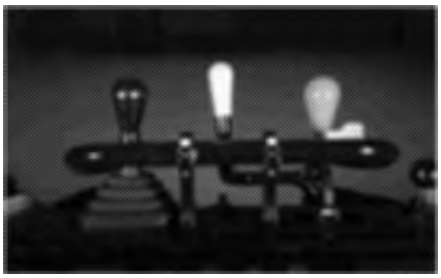

JOYSTICK CONTROL. Operators can steer with a single pilot-operated joystick. The single joystick offers the operator a smooth range of motion without balancing engagement of two separate controls.

STEADY TURNS. A single, pilot-operated ground drive joystick offers a smooth range of motion without balancing engagement of two separate controls.

[1] A direct height comparison is not possible since Vermeer does not contain the height of the basic unit for the S450TX.

As Toro will prove in the next few sections of this Reexam Request, the alleged invention of the '386 patent amounts to nothing more than the simple and entirely obvious replacement of the radial lift loader arm linkage disclosed in Vermeer with a vertical lift loader arm linkage that was sized to the same general size as the existing radial lift loader arm linkage. The actual structural design of the vertical lift loader arm linkage that the Patent Owner used as the replacement for the existing radial lift linkage was well known in the skid steer art at the time of the alleged invention of the '386 patent. The rationale or motivation for making such a replacement, namely to obtain the advantages that vertical lift loader arm linkages were known to provide over radial lift loader arm linkages, was also well known in the skid steer art at the time of the alleged invention. These facts simply do not support the broad, overreaching claims contained in the '386 patent.

E. A Review of the Vertical Lift Loader Arm Linkage of the '386 Patent

The basic difference between a radial lift loader arm linkage and a vertical lift loader arm linkage is the removal of the fixed pivot connection of the loader arm to the mainframe of the skid steer. With that removal, the loader arm is no longer constrained to pivot about a circular arc. Instead, the loader arm is now free to move longitudinally back and forth in a fore-and-aft direction to lift the load in a vertical path and to obtain greater reach at full height. However, the loader arm must still be supported on the mainframe even as it makes such fore-and-aft movements.

In the vertical lift loader arm linkage of the '386 patent, the loader arm 15a is supported in its fore-and-aft movement by a front linkage 46a and a rear linkage 50a which are separate from one another. Linkages 46a, 50a each extend between and are pivotally connected at opposite ends thereof to loader arm 15a and the mainframe 10. An actuator 54 also extends between and is pivotally connected at its opposite ends to loader arm 15 and mainframe 10. Actuator 54 is itself positioned between front and rear linkages 46a, 50a. The above described components have been identified by labels in Fig. 2 of the '386 patent as reproduced below for ease in finding them.

In Fig. 2 of the '386 patent below, the pivot connection between mainframe 10 and front linkage 46a has been enclosed in a red triangle, the pivot connection between mainframe 10 and

rear linkage 50a has been enclosed in a green triangle, and the pivot connection between mainframe 10 and actuator 54 has been enclosed in a blue triangle. These pivot connections have been called out in this fashion as the "low" placement of two of the pivot connections on mainframe 10 is recited in claims 15-19 of the '386 patent.

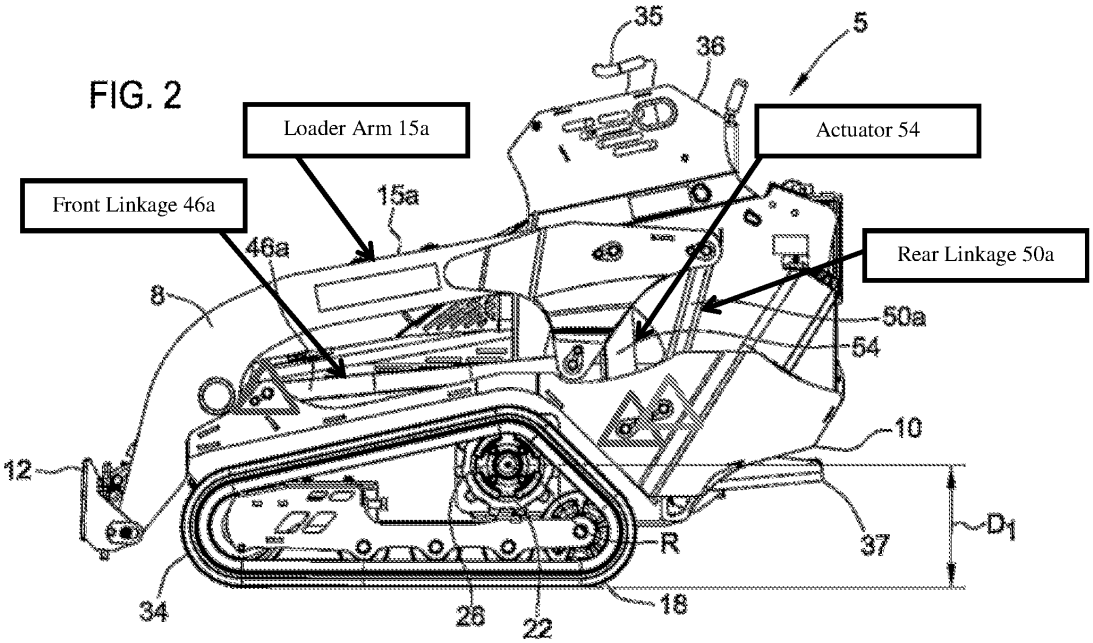

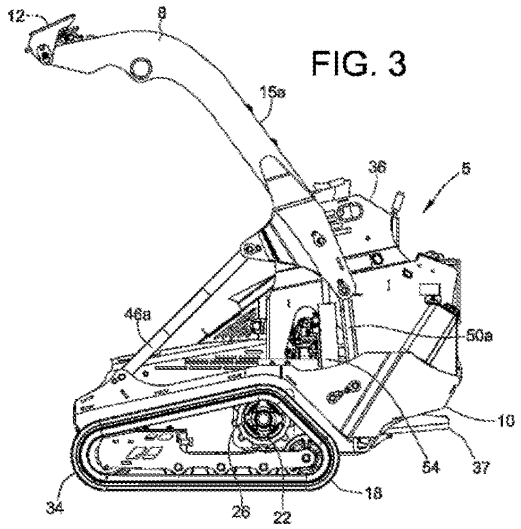

Fig. 2 above from the '386 patent shows the vertical lift loader arm linkage in its lowermost position. Fig. 3 of the '386 patent, reproduced to the left hereof, shows the vertical lift loader arm linkage in its uppermost position. Note how the rear end of loader arm 15a has swung forwardly relative to mainframe 10 from the position shown in Fig. 2 above with the tool attachment 12 having moved vertically upwardly from its lowermost position in Fig. 2. This is the

vertical lift loader arm linkage in action. As Toro will show in the next section of this Reexamination Request, **it is also a purely conventional vertical lift loader arm linkage long known in the skid steer art**.

Returning to the alleged significance of the low placement of some of the pivots of the '386 patent vertical lift linkage, the '386 patent does NOT describe the low pivot placements as being critical or necessary to the use of a vertical lift loader arm linkage to a mini skid steer. All the '386 patent says is that "some embodiments" have the claimed distance ratios. ('386 patent, Col. 5, l. 4). Moreover, the '386 patent describes the advantages of this low pivot placement as follows:

> "By positioning the pivot points relatively low on the mainframe 10, the mass of the mainframe 10 and the resulting cost of the carrier 5 may be reduced. Further, such a low profile mainframe 10 improves visibility for the operator and allows the center of gravity of the carrier 5 to be lowered which improves its stability." ('386 patent, Col. 5, ll. 62-67)

Upon closer examination, these advantages do not appear credible. For one thing, what is identified by the '386 patent as the "mainframe 10" is actually only the lower half of the mainframe and ignores all of the mass provided by an upper half of the mainframe comprising the control station 36, 39. Thus, some reduction in the mass of the lower half of the mainframe 10, even if possible, would not significantly reduce the **overall** mass of the entire mainframe or the entire mini skid steer. That is why our earlier comparison of the Patent Owner's prior art S450TX mini skid steer with the Patent Owner's CTX50 mini skid steer corresponding to the '386 patent showed that the two weighed almost exactly the same. In products weighing **over one ton** each, there was only a 9.1 kg. or 20 lb. weight difference between the two.

Moreover, as to the low profile which "improves visibility for the operator and allows the center of gravity of the carrier 5 to be lowered which improves its stability", let's compare below the Patent Owner's prior art S450TX mini skid steer to the Patent Owner's CTX50 mini skid steer corresponding to the '386 patent.

Clearly, **both products** are low profile mini skid steers having low centers of gravity. Because the engine hood and shields taper down as they extend forwardly, **both products** provide the operator with unimpeded visibility to the front of the mini skid steer and to the tool carried on the front of the loader arms. In addition, it is clear from the photographs compared above that **both products** are substantially the same height with the weight of the operator being positioned substantially identically relative to the ground, thus giving **both products** a vertical center of gravity that would be at much the same height relative to the ground. The only significant difference between **both products** is that the Patent Owner's prior art S450TX mini skid steer uses a radial lift loader arm linkage that is well known in the skid steer loader art while the Patent Owner's CTX50 mini skid steer corresponding to the '386 patent uses a **vertical lift loader arm linkage that is also well known in the skid steer loader art**.

F. <u>A Review of the Prior Art Mustang Vertical Lift Loader Arm Linkage</u>

Toro is submitting herewith a brochure entitled "Skid Steer Loaders – Radial & Vertical Lift" published in 2014 by a company called Mustang, which brochure is being referred to herein as "Mustang", disclosing a line of radial and vertical lift skid steer loaders. As Toro will now

show, Mustang clearly teaches both the vertical lift loader arm linkage disclosed and claimed in the '386 patent as well as the rationale or motivation that would prompt a person of ordinary skill in the art to use such a vertical lift loader arm linkage in place of a radial lift loader arm linkage. The '386 patent involves nothing more than downsizing the prior art vertical lift loader arm linkage taught in Mustang to fit the smaller size of the Patent Owner's prior art S450TX mini skid steer and applying this downsized vertical lift loader arm linkage to the Patent Owner's prior art S450TX mini skid steer in place of the existing radial lift loader arm linkage for the reasons specifically spelled out in Mustang. Nothing could have been more obvious than this to a person of ordinary skill in the art at the time of the alleged invention of the '386 patent.

Mustang discloses a skid steer loader known as the 2700V that teaches a vertical lift loader arm linkage that is the template for that employed by the Patent Owner in the '386 patent. They are structurally identical in terms of design. They both employ on each side of the skid steer a pivotal front linkage and a pivotal rear linkage that permit the loader arm to float fore-and-aft relative to the mainframe to achieve a vertical lift and an actuator positioned between the front and rear linkages. These components have been identified in the portion of the photograph of the prior art 2700V taken from Mustang as reproduced below. ('Mustang, p. 18).

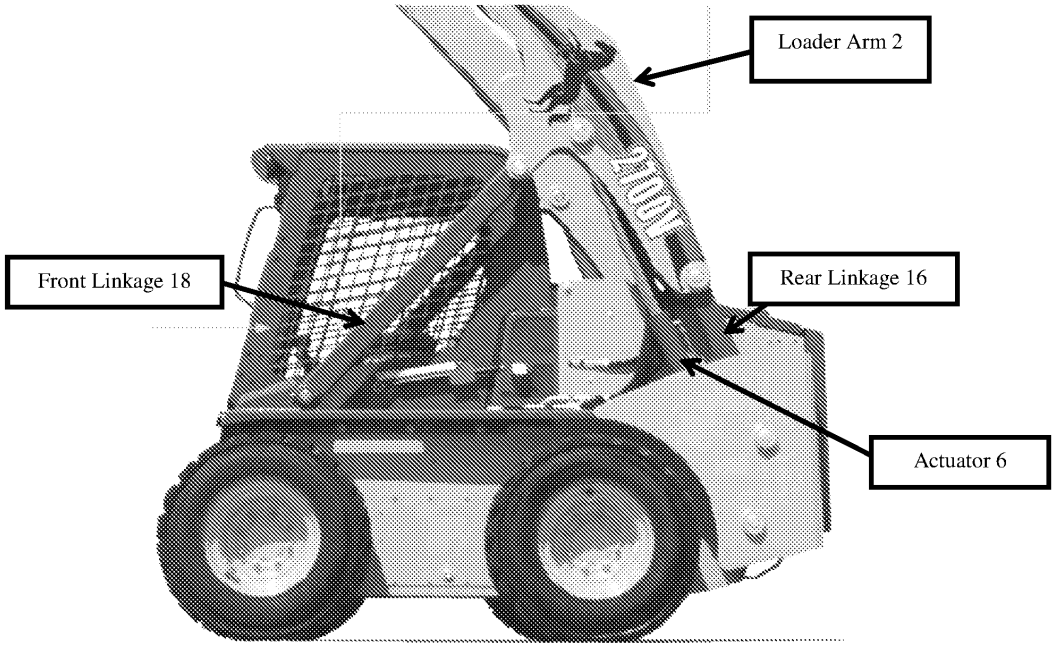

Comparing these components in the prior art 2700V to their counterparts in the '386 patent below, there simply can be no question that the vertical lift loader arm linkage of the '386 patent is a carbon copy of the design of the 2700V vertical lift loader arm linkage shown above.

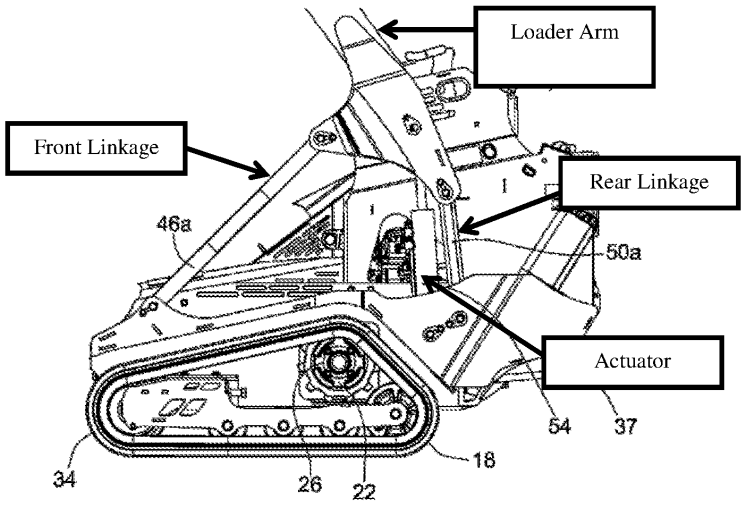

Moreover, the 2700V skid steer loader of Mustang places the various linkage and actuator pivots low on the mainframe of the skid steer loader. As Toro will show below, these pivot placements are so low on the mainframe that they teach the various distance ratios recited in claims 15-18 of the '386 patent. The pivots will be identified in accordance with various colored triangles color coded as before when identifying the corresponding pivots shown in the '386 patent , i.e., red for the front linkage pivot, blue for the actuator pivot, and green for the rear linkage pivot. The various distances and the distance ratios recited in claims 15-18 of the '386 patent are also shown.

Claims 15-18 of the '386 patent claim only **two** of the three pivots between the front linkage, actuator, and rear linkage to the mainframe. The two pivots recited in claims 15-18 comprise the actuator/mainframe pivot (the blue triangle below) and the pivot of one of the linkages to the mainframe (either the red triangle below or the green triangle below). Toro has chosen to read claims 15-18 of the '386 patent on the actuator/mainframe pivot (the blue triangle below) and the rear linkage/mainframe pivot (the green triangle below). In addition, Toro has appended various reference distances D_1, D_2, D_3 and D_5 used in claims 15-18 to the illustration below in accordance with the components to which they are linked in claims 15-18.

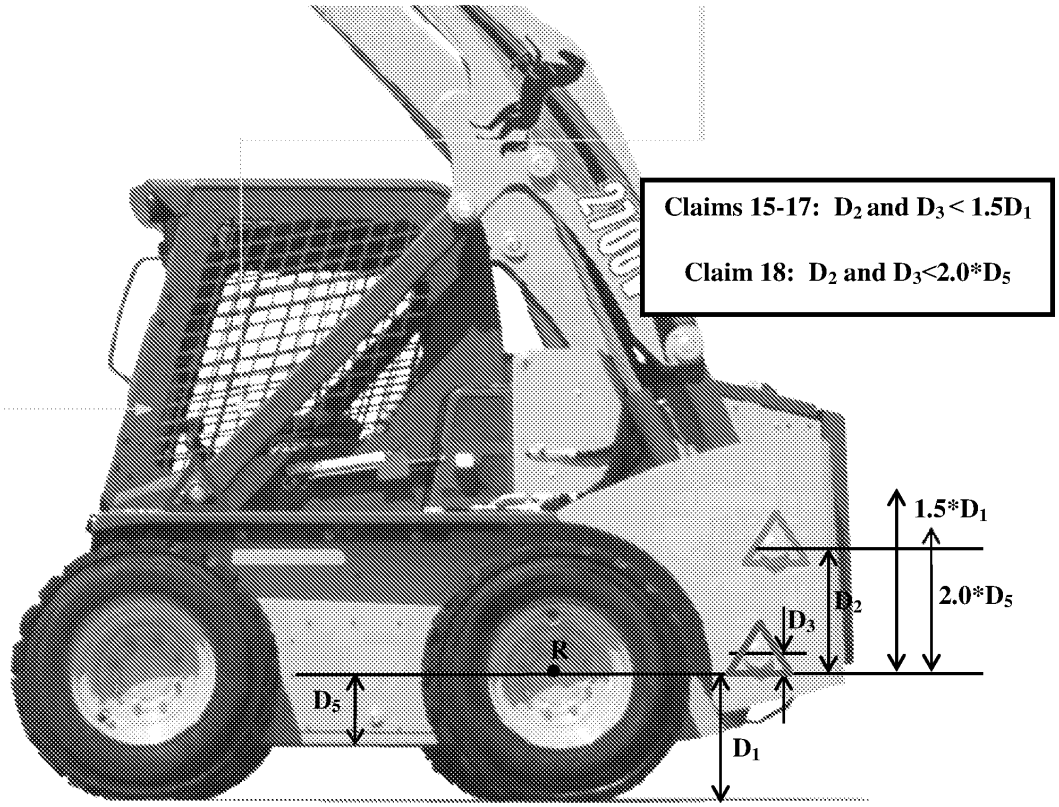

When we compare the low pivot placements taught in Mustang to the ratios required in claims 15-18 of the '386 patent, we find that the distances D_2 and D_3 between the rear linkage/mainframe pivot (green triangle) and the actuator/mainframe pivot (blue triangle), respectively, and the traction drive rotational axis R are less than 1½ times the distance D_1 between R and the ground. This satisfies claims 15-17 of the '386 patent. Turning to claim 18 of the '386 patent, we find that the distances D_2 and D_3 between the rear linkage/mainframe pivot (green triangle) and the actuator/mainframe pivot (blue triangle), respectively, and the traction drive rotational axis R are less than twice the distance D_5 between R and the bottom of the mainframe. Thus, besides teaching a low pivot placement generally, **Mustang even teaches a placement that expressly satisfies the limitations of claims 15-18 of the '386 patent**

While the foregoing illustrates how Mustang teaches the low pivot placement as mathematically recited in claims 15-18 of the '386 patent, Mustang also provides a comparison between a radial lift skid steer (the Model 1650R skid steer) versus a vertical lift skid steer (the same 2700V discussed above). ('Mustang, pp. 4-5). Portions of the pictures from that comparison are set forth below.

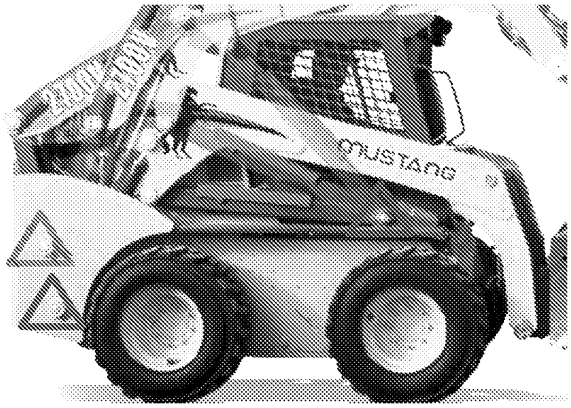

Note how high the fixed loader arm/mainframe pivot (enclosed in a purple triangle) as well as the actuator/mainframe pivot (enclosed in a blue triangle) are on the radial lift 1650R. Note how much lower all three of the pivots (enclosed in their identifying red, blue and green triangles) are on the mainframe in the vertical lift 2700V compared to the radial lift 1650R. Note how high the rear of the side of the mainframe must go in the radial lift 1650R to accommodate the high placement of the loader arm fixed pivot. Note how the side of the mainframe has a low profile in the vertical lift 2700V compared to the radial lift 1650R due to the substantially lower placement of the pivots. This side-by-side comparison from Mustang further proves at a glance that there really is no magic in the mathematical limitations set forth in claims 15-19 of the '386 patent. They flow simply from the fact that the mere adoption of the type of vertical lift loader arm linkage of the 2700V as disclosed in Mustang causes the mainframe placements for the actuator and for the two new linkages required for fore-and-aft motion of the loader arm to naturally fall lower on the mainframe than in a radial lift skid steer.

Finally, in the side-by-side comparison noted above, Mustang explicitly spells out the advantages provided by a vertical lift skid steer compared to a radial lift skid steer.

The top caption entitled "Vertical Lift" says it all. Toro will let it speak for itself in the highlighted portions thereof as shown below:

VERTICAL LIFT
Providing more reach at full lift height is optimal for applications that require loading and stacking at high heights. By keeping the load closer to the machine, lift capacities are increased over radial-lift models.

How does a vertical lift skid steer which lifts a given load higher than a radial lift skid steer provide increased lift capacities? A vertical lift skid steer is more stable since the length of the fore-and-aft lever arm between the load being lifted and the machine center of gravity remains substantially constant as the load moves up. By contrast, as illustrated to the right hereof using the radial lift 1650R illustration in Mustang ('Mustang, p. 5), a radial lift skid steer swings the load further forwardly away from the machine center of gravity in the first half of its lift path. This increases the length of the fore-and-aft lever arm relative to the center of gravity and thus increases the fore-and-aft tipping force on the skid steer. Thus, a radial lift skid steer has to limit the loads it can lift to keep the tipping force, which is at a maximum force in the middle of the left, at an acceptable level. In a vertical lift skid steer, there is no increase in the tipping force since the load moves vertically rather than along a circular arc, thus allowing a somewhat heavier load to be lifted for a similarly sized skid steer.

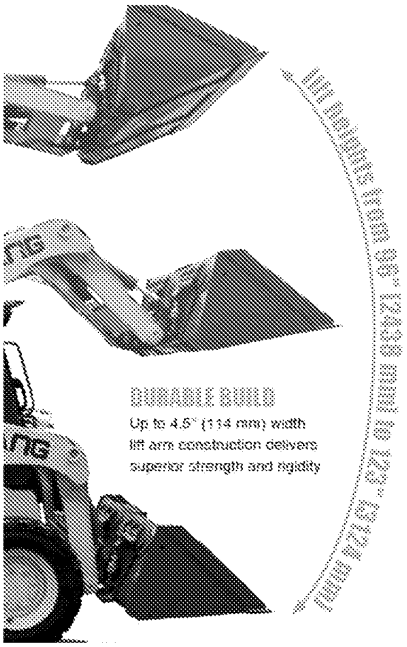

G. Patent Owner Acknowledgment of the Known Advantages of a Vertical Lift

Let's digress for a moment to where we began, namely to our earlier comparison between the specifications of the Patent Owner's prior art S450TX and the specifications of the Patent Owner's CTX50 mini skid steer corresponding to the '386 patent. Once the Patent Owner modified its prior art S450TX mini skid steer to incorporate the vertical lift linkage shown in Mustang as a replacement for the existing radial lift linkage, what happened? Not surprisingly, as shown in the comparison below, both the lift capacity and tipping loads increased **exactly as Mustang said would happen** when the Mustang vertical lift loader arm linkage was simply downsized and adapted to the S450TX platform. Lift capacity went up 20% (from 500 pounds in the S450TX to 600 pounds in the CTX50) and the tipping load went up correspondingly by 20%

(from 1430 pounds in the S450TX to 1715 pounds in the CTX50). The S450TX specifications are on the left and the CTX50 specifications are on the right.

PERFORMANCE

SAE-rated operating capacity: 500 lb (226.8 kg)
Tipping capacity [with 175 lb (79.4 kg) operator]: 1430 lb
Forward travel speed: 3.5 mph (5.6 km/h)

PERFORMANCE

ISO-rated operating capacity: 600 lb (272.2 kg)
Tipping load [with 175 lb (79.4 kg) operator]: 1715 lb
Max forward travel speed: 3.5 mph (5.6 km/h)

Moreover, in the event the reader did not have both set of specifications on hand to make the comparison, the Patent Owner made sure to emphasize the point that its vertical lift linkage would lift more in the captioned photograph, as reproduced to the right hereof, contained on the front page of the CTX50 Spec Sheet. Note that in the text, the Patent Owner links the ability to **LIFT MORE** to the simple presence of the "vertical geometry lift loader arms". This is, of course, exactly the same motivation that Mustang, and many others that could have been cited in place of Mustang, had earlier provided to the skid steer art for using vertical lift geometry in place of radial lift geometry. The Patent Owner broke no new ground in the alleged invention of the '386 patent, but simply followed in the footsteps of others.

LIFT MORE. Vertical geometry lift loader arms help provide an ISO-rated operating capacity of 600 lb (272.2 kg).

H. Ground 1 –Detailed Prior Art Application to Claims 1, 3-13, 15-18 and 20

It would have been obvious to one of ordinary skill in the skid steer art at the time of the invention of the '386 patent to have modified the S450TX mini side steer of the Patent Owner as shown in Vermeer to utilize an appropriately downsized version of the vertical lift loader arm linkage disclosed in Mustang to obtain the advantages **expressly spelled out** in Mustang, namely to obtain better forward reach at full lift height and to increase the load that could be lifted over that capable of being lifted by the unmodified radial lift linkage of the S450TX. When that

combination is made, it results in the mini skid steer of the '386 patent. Such a combination is also the essence of obviousness under 35 U.S.C. §103(a).

In *KSR,* the Supreme Court reaffirmed principles based on its precedent that "[t]he combination of familiar elements according to known methods is likely to be obvious when it does no more than yield predictable results." *KSR Int'l Co. v. Teleflex Inc.,* 550 U.S. 398, 416 (2007). The Court also stated that "when a patent claims a structure already known in the prior art that is altered by the mere substitution of one element for another known in the field, the combination must do more than yield a predictable result." *Id.* The Court also explained that "[w]hen a work is available in one field of endeavor, design incentives and other market forces can prompt variations of it, either in the same field or a different one. If a person of ordinary skill can implement a predictable variation, §103 likely bars its patentability." *Id.* at 417. The Court further noted that "[a] person of ordinary skill is also a person of ordinary creativity, not an automaton." *Id.* at 421. As Toro will now show below, the principles established by *KSR* mandate that the PTO find claims 1, 3-13, 15-18 and 20 of the '386 patent to be unpatentable under 35 U.S.C. §103(a).

The reading below of Vermeer and Mustang to claims 1, 3-13, 15-18 and 20 of the '386 patent will refer to the labels Toro applied to illustrations from each as set forth herein on pages 6 and 18. Such illustrations will be reproduced below for convenience where needed.

Claims 1, 3-13, 15-18 and 20 of the '386 patent at issue herein are unpatentable under 35 U.S.C. 103(a) as such claims would have been obvious to one of ordinary skill in the art at the time of the invention over Vermeer in view of Mustang.

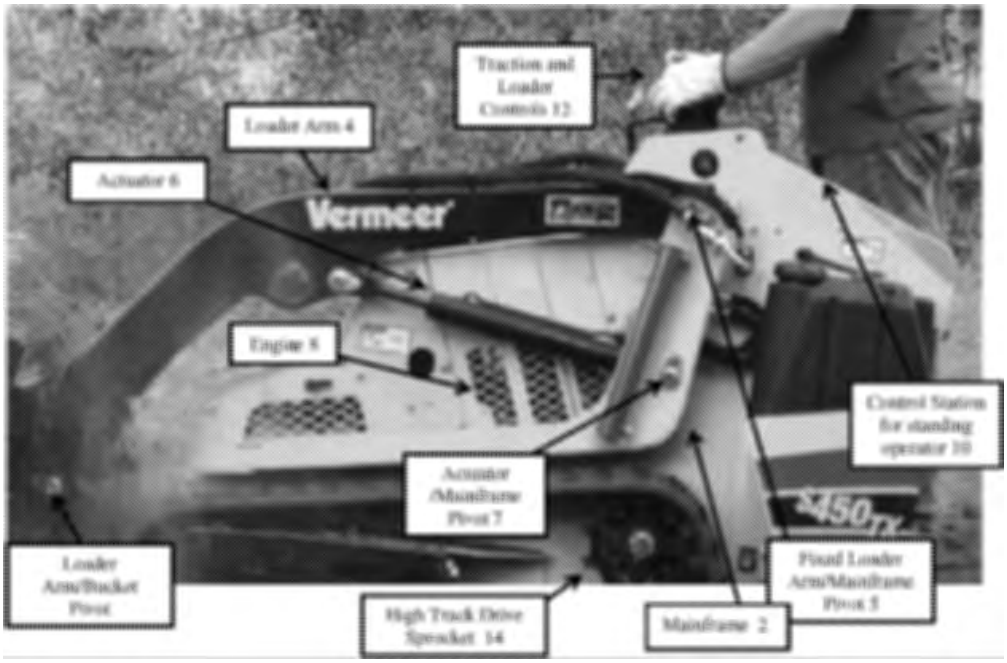

With respect to claim 1, Vermeer as depicted above discloses

"a compact tool carrier configured for standing or walk-behind operator control and having a longitudinal axis and a mass of less than about 1500 kg" ('Vermeer, p. 2, the weight of 961.6 kg.);

"the compact tool carrier comprising: a loader having an arm, the loader being adapted to carry a tool" ('Vermeer, loader arm 4);

"a mainframe for supporting the loader, the mainframe having a first side and a second side, and having a front end and a rear end relative to the longitudinal axis" ('Vermeer, mainframe 2);

"an actuator pivotally attached to the first side of the mainframe and pivotally attached to the loader arm" ('Vermeer, actuator 6);

"and a control station having operator controls for propelling the compact tool carrier forward and for raising and lowering the loader, the control station being mounted toward the rear of the compact tool carrier and adapted to allow for standing or walk-behind operation" ('Vermeer, control station 10 and controls 12).

Vermeer does not disclose "the mainframe comprising an engine bracket that extends from the first side toward the second side for mounting an engine to the mainframe, the engine bracket being spaced from the rear end of the mainframe." However, Vermeer does disclose placing engine 8 clearly ahead of the rear end of mainframe 2. Vermeer also identifies that one version of engine 8 that can be installed in the Patent Owner's S450TX mini skid steer is a gasoline fueled, air cooled Kohler Command Pro EFI ECH740. See the S450TX specifications of Vermeer as excerpted on page 10 of this Reexamination Request. Kohler is a third party vendor of engines and thus the Kohler engine described as being used in Vermeer would inherently have to be mounted to some structure on the mainframe of the S450TX mini skid steer disclosed in Vermeer. It would have an obvious choice of engineering design to one of ordinary skill in the art at the time of the invention to use "an engine bracket that extends from the first side toward the second side" of the mainframe to mount the Kohler supplied engine at its required position ahead of the rear end of the mainframe.

Vermeer also does not disclose "the loader arm not being directly attached to the mainframe" or "a linkage pivotally attached to the first side of the mainframe and pivotally attached to the loader arm".

However, Mustang as depicted below teaches a vertical lift loader arm linkage in which the loader arm is freed from a fixed pivot connection to the mainframe and is permitted to move fore-and-aft by a rear linkage 16 and a front linkage 18 that pivotally connect loader arm 2 to the mainframe.

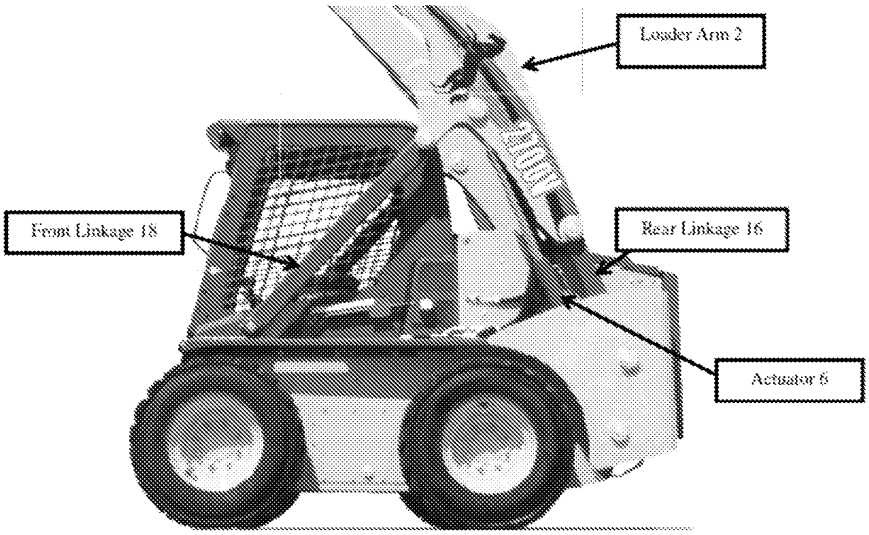

Mustang further describes the motivation for using such a vertical lift in place of a radial lift as follows with the yellow highlighting having been added thereto by Toro.

> **VERTICAL LIFT**
> Providing more reach at full lift height is optimal for applications that require loading and stacking at high heights. By keeping the load closer to the machine, lift capacities are increased over radial-lift models.

From this teaching, it would have been obvious to one of ordinary skill in the art at the time of the invention to replace the radial lift loader arm linkage of Vermeer with an appropriately sized vertical lift loader arm linkage as disclosed in Mustang to obtain the better reach and increased lift capacities that Mustang expressly teaches would result from such a replacement. When so modified, this would result in "the loader arm not being directly attached to the mainframe" and the rear linkage added to Vermeer as part of the modification, corresponding to the rear linkage 16 of Mustang, would comprise the recited "linkage pivotally attached to the first side of the mainframe and pivotally attached to the loader arm".

With respect to claims 3 and 4, Vermeer as modified in view of Mustang with respect to claim 1 would incorporate Mustang's vertical lift loader arm linkage, including the actuator and the front and rear linkages, on **both** the left and right sides of thereof in replacement of the

radial lift loader arm linkages originally present on **both** the left and right sides of the S450TX mini skid steer disclosed in Vermeer.

With respect to claim 5, the tracked drive system 14 of Vermeer.

With respect to claim 6, the two engine options described on page 2 of Vermeer and the engine 8 shown in Vermeer.

With respect to claim 7, the actuator 6 of Vermeer is a hydraulic cylinder.

With respect to claim 8, it would have further been an obvious choice of engineering design to one of ordinary skill in the art at the time of the invention to form the loader arm as a single weldment. See the citation to *In re Larson* in MPEP 2144.04 (V) (B) entitled "Making Integral", upon which the Examiner relied during the prosecution of the application that led to the '386 patent to reject the "single weldment" loader arm claim. (Final Rejection of 10/23/2015, p. 4).

With respect to claims 9 and 10, the '90 cm height requirement would have further been an obvious choice of engineering design to one of ordinary skill in the art at the time of the invention in view of the Patent Owner's admission in the '386 patent ('386 patent, Col. 3, ll. 46-61) that such a height requirement was mandated in applicable ISO standards.

With respect to claims 11 and 12, to the extent the method set forth therein is supported by the '386 patent, it is met by the rearward position of the operator shown in Vermeer, which is identical to the rearward position the operator has in the '386 patent.

With respect to claim 13, the bucket on the front of loader arm 4 in Vermeer.

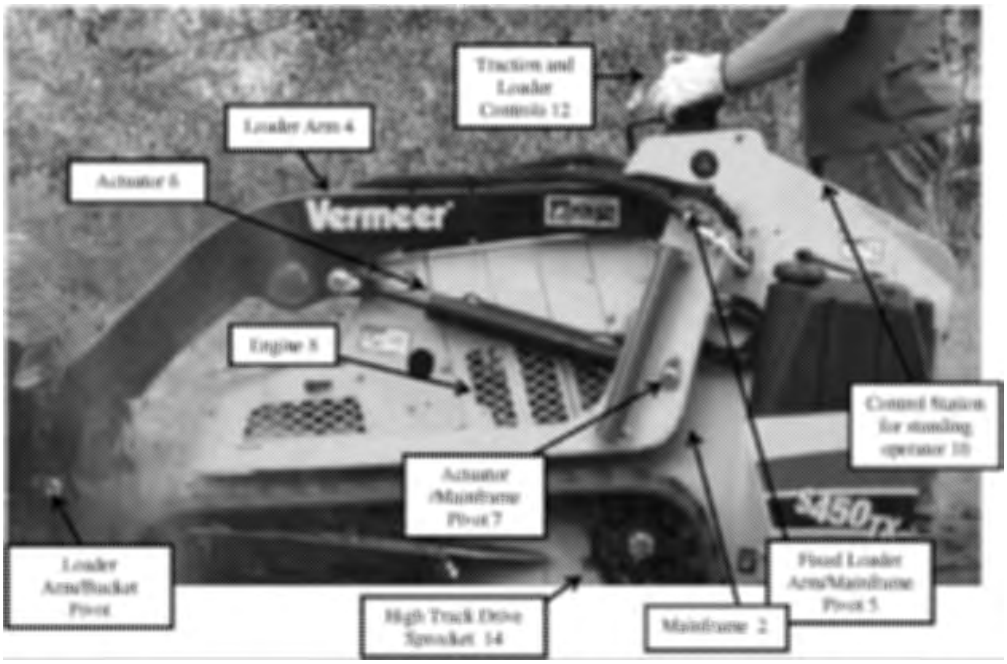

With respect to claim 15, Vermeer as depicted above discloses

"a compact tool carrier comprising a loader adapted to carry a tool" ('Vermeer, loader arm 4;

"a mainframe for supporting the loader, the mainframe having a first side and a second side, and having a front end and a rear end relative to the longitudinal axis" ('Vermeer, mainframe 2);

"each side having a top and a bottom" ('Vermeer, mainframe 2);

"the first side of the mainframe having at least two pivot points relative to the loader" ('Vermeer, pivots 5, 7);

"an actuator pivotally attached to the first side of the mainframe at a pivot point and pivotally attached to the loader" ('Vermeer, actuator 6);

"a drive mechanism comprising tracks or wheels for propelling the compact tool carrier over a supporting surface" ('Vermeer, the endless track driven by high track drive sprocket 14);

"the drive mechanism being attached to the mainframe about a rotational axis" ('Vermeer, the axis of sprocket 14);

"the compact tool carrier having a bottom at which the drive mechanism contacts the supporting surface, the rotational axis and bottom of the compact tool carrier being separated by a vertical distance D1" ('Vermeer, the distance between the axis of sprocket 14 and where the lowermost run of the endless track drive by sprocket 14 contacts the ground); and

"a control station having operator controls for propelling the compact tool carrier forward and for raising and/or lowering the loader, the control station being mounted toward the rear of the compact tool carrier and adapted to allow for standing or walk-behind operation" ('Vermeer, control station 10 and controls 12).

Vermeer does not disclose "the mainframe comprising an engine bracket that extends from the first side toward the second side for mounting an engine to the mainframe, the engine bracket being spaced from the rear end of the mainframe." However, Vermeer does disclose placing engine 8 clearly ahead of the rear end of mainframe 2. As set forth earlier in the detailed application above of Vermeer to claim 1 of the '386 patent and referring to the use of the Kohler engine in Vermeer as discussed on page 25 hereof, it would have been an obvious choice of engineering design to one of ordinary skill in the art at the time of the invention to use "an engine bracket that extends from the first side toward the second side" of the mainframe to mount the Kohler supplied engine at its required position ahead of the rear end of the mainframe.

Vermeer also does not disclose "the loader arm not being directly attached to the mainframe" or "a linkage pivotally attached to the first side of the mainframe and pivotally attached to the loader arm".

As set forth earlier in the detailed application above of Vermeer to claim 1 of the '386 patent and again referring to the vertical lift teachings of Mustang discussed on pages 25 and 26 hereof , it would have been obvious to one of ordinary skill in the art at the time of the invention to replace the radial lift loader arm linkage of Vermeer with an appropriately sized vertical lift loader arm linkage as disclosed in Mustang to obtain the better reach and increased lift capacities that Mustang expressly teaches would result from such a replacement. When so modified, this would result in "the loader arm not being directly attached to the mainframe" and the rear linkage added to Vermeer as part of the modification, corresponding to the rear linkage 16 of Mustang, would comprise the recited "linkage pivotally attached to the first side of the mainframe and pivotally attached to the loader arm".

Vermeer further does not disclose "each vertical distance between the rotational axis and a pivot point being less than 1.5 times D1". However, Mustang additionally discloses placing the pivots of the various components of its vertical lift loader arm linkage low on the mainframe. This is illustrated again below with respect to the actuator/mainframe pivot (blue triangle) and the rear linkage/mainframe pivot (green triangle).

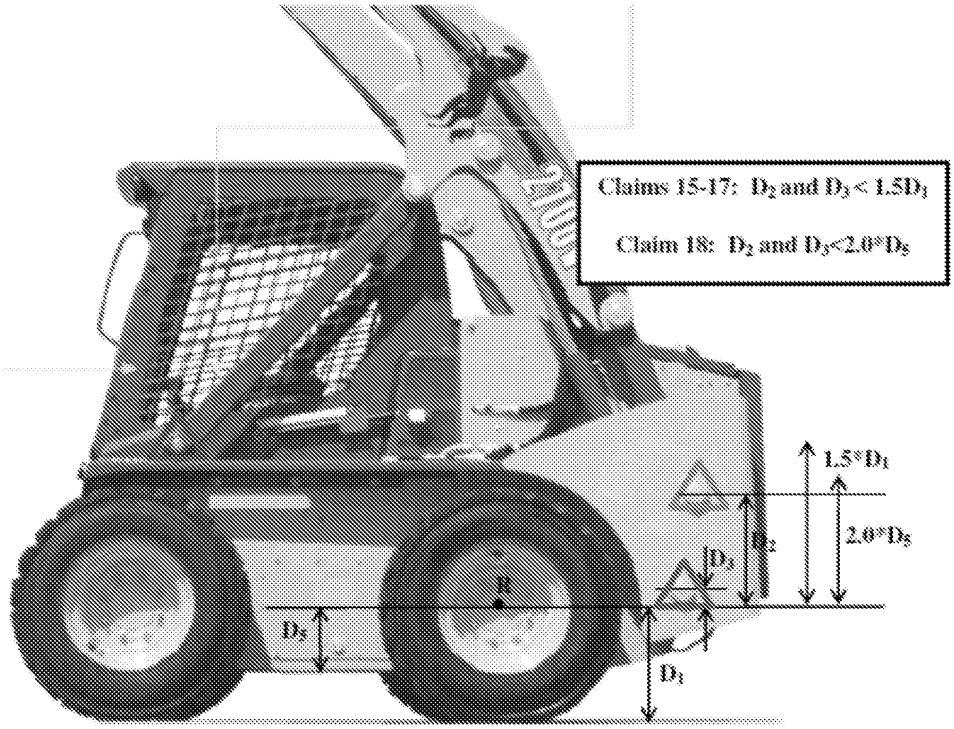

From this teaching, it would have further been obvious to one of ordinary skill in the art at the time of the invention, when adapting the vertical lift loader arm linkage to Vermeer, to utilize a similarly low placement of the mainframe pivots on Vermeer's mainframe 2 as further suggested in Mustang as shown above in which the distance D_2 between the rotational axis R and the rear linkage/mainframe pivot and the distance D_3 between the rotational axis R and the actuator/mainframe pivot would be set to be less than 1.5 D_1 as taught in Mustang above.

With respect to claims 16-18, when Vermeer is modified to follow the low pivot placement teachings of Mustang as illustrated above, all the mathematically recited ratios set forth in claims 16-18 are taught in Mustang and will be met as well. Note that D_2 and D_3 are also less than 2.0 D_5 as set forth in claim 18.

With respect to claim 20, the bucket on the front of loader arm 4 in Vermeer.

I. Ground 2 –Detailed Prior Art Application to Claims 1, 3-13, 15-18 and 20

Toro is submitting herewith relevant portions of an additional prior art publication of the Patent Owner relating to the Patent Owner's S450TX mini skid steer. This additional prior art publication is entitled "S450TX Mini Skid Steer Parts Manual" and is being referred to herein as the "Vermeer Parts Manual". Vermeer Parts Manual relates to the same S450TX mini skid steer disclosed in Vermeer.

In Ground 1, the limitation comprising the "engine bracket" appearing in claims 1 and 15 was met as being an obvious choice of engineering design given since the Kohler engine described in Vermeer had to be inherently mounted in the mainframe in some fashion. Similarly, Toro relied upon an obvious choice of engineering design to meet the limitation of claim 8 that the loader arm incorporates a single weldment. These are sound rejections and wholly appropriate uses of what would have been obvious choices of engineering design to one of ordinary skill in the art at the time of the invention of the '386 patent. However, out of an abundance of caution, Toro will now rely upon Vermeer Parts Manual to show that the aforementioned "engine bracket" limitation in claims 1 and 15 and the "single weldment" limitation in claim 8 are expressly taught therein.

Turning first to the "engine bracket" limitations in claims 1 and 15 of the '386 patent, the Kohler engine shown in Vermeer Parts Manual ('Vermeer Parts Manual, Section 7, p. 1.04) has been overlaid by Toro onto the mini skid steer mainframe shown in Vermeer Parts Manual ('Vermeer Parts Manual, Section 3, p 1.08) to show the engine and the mainframe in a single illustration that appears below. A mounting plate is bolted to the bottom of the Kohler engine by four inboard, upwardly extending mounting bolts colored blue. The Kohler engine and its mounting plate are then secured to the mainframe of the mini skid steer by four outboard, downwardly extending machine screws or bolts colored green. The mainframe has a raised,

upwardly and laterally extending engine bracket, colored yellow below, to which the four green screws or bolts will be attached to mount the Kohler engine to the mainframe.

Only portions of the yellow engine bracket are visible in Vermeer Parts Manual with the rest of the engine bracket being hidden. However, there is no doubt that what Toro has colored yellow in the illustration below is the engine bracket. When the Kohler engine mounting plate is attached to the yellow engine bracket, the portions of the Kohler engine that extend behind the mounting plate will be positioned exactly where Vermeer teaches, namely adjacent the large side cutouts in the mainframe that receive the vented and removable side panels through which access to the engine is had from the sides of the mini skid steer.

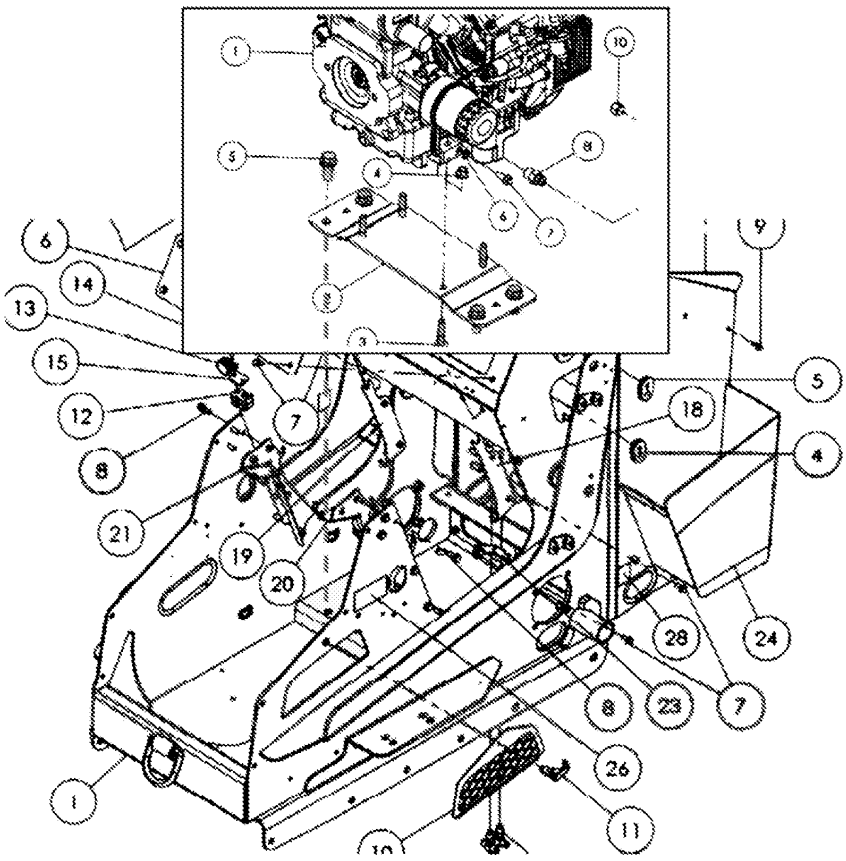

Turning now to the "single weldment" limitation in claim 8 of the '386 patent, Vermeer Parts Manual illustrates discloses a single weldment that includes both the left and right loader

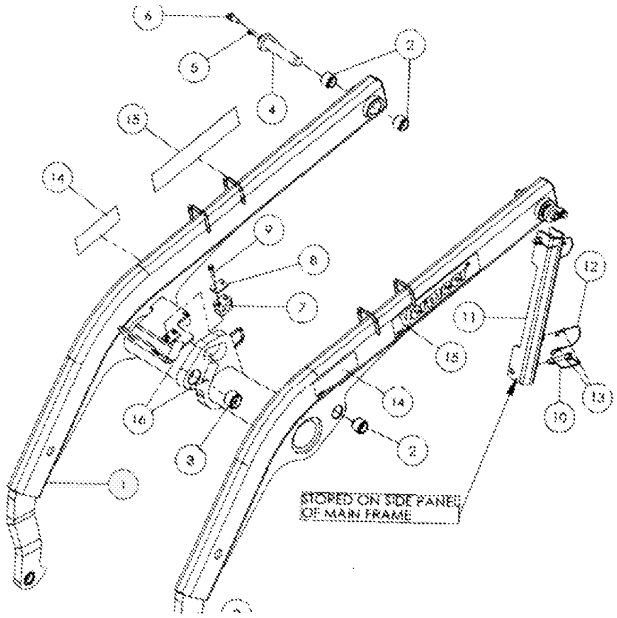

arms and a connecting cross member. This is shown in the illustration to the left hereof regarding part #1 along with the description of part #1 from the accompanying parts list. ('Vermeer Parts Manual, Section 10, p. 1.05).

Boom Arm (SN 135-) I

REF. NO.	*	PART NO.	DESCRIPTION
1		296395778	*WELDMENT-SKID STEER BOOM
2		265109001	BUSHING 1.38 X 1.00 X 1 LG - GREASE
3		265109001	BUSHING 1.63 X 1.25 X 1.00 LG

In view of the above, claims 1, 3-13, 15-18 and 20 of the '386 patent at issue herein are unpatentable under 35 U.S.C. 103(a) as such claims would have been obvious to one of ordinary skill in the art at the time of the invention over Vermeer in view of Mustang as set forth above in Section III (H) hereof relating to Ground 1 and further in view of Vermeer Parts Manual.

The detailed application of Vermeer and Mustang to claims 1, 3-13, 15-18 and 20 of the '386 patent at issue herein on a claim by claim basis as set forth above in Section III (H) hereof relating to Ground 1 remains unchanged and is hereby incorporated by reference in Ground 2 except for the two following alternations. The first alteration relates to claims 1 and 15. Regarding such claims, the reliance on obvious engineering design choice as used in Ground 1 with respect to claims 1 and 15 to suggest the use in Vermeer of "an engine bracket" to mount the Kohler supplied engine ahead of the rear end of the mainframe is now replaced in Ground 2 by the express teaching of such an engine bracket in Vermeer Parts Catalog as an expedient and simple way of mounting an engine in the mainframe of a mini skid steer loader. The second

alteration relates to claim 8. The reliance on obvious engineering design choice as used in Ground 1 with respect to claim 8 to suggest a "single weldment" loader arm in Vermeer is now replaced in Ground 2 by the express teaching of such a single weldment loader arm in Vermeer Parts Catalog as an expedient and simple way of providing strength in the loader arm.

IV. The Objective Evidence Relating to Obviousness

A. Simultaneous Invention Favors a Finding of Obviousness

Mini skid steers having radial lift linkages, such as the S450TX disclosed in Vermeer, were originally developed in Australia and eventually entered the construction market in the United States in the mid 1990's, approximately 20 years ago. Soon after their appearance in the United States, Toro acquired the rights to the Dingo brand mini skid steer for the United States from the Australian manufacturer thereof. (https://newsroom.toro.com/en/News/2016/02-23-2016-dingo-timeline). Since that time, Toro has been developing and selling various different models of its own design of such radial lift mini skid steers. Toro refers to such mini skid steers as compact utility loaders.

Toro introduced to the market in early 2015 its first model of a mini skid steer with a vertical lift linkage. This model is known as the Dingo TX 1000, referred to hereafter as the TX 1000, and comes in either a narrow or wide track version. A photograph of Toro's TX 1000 mini skid steer is shown below. Various components of the TX 1000 including the components of the left side vertical lift linkage have been labeled below. The components of the corresponding right side vertical lift linkage are mostly hidden in the photograph below and thus are not labeled.

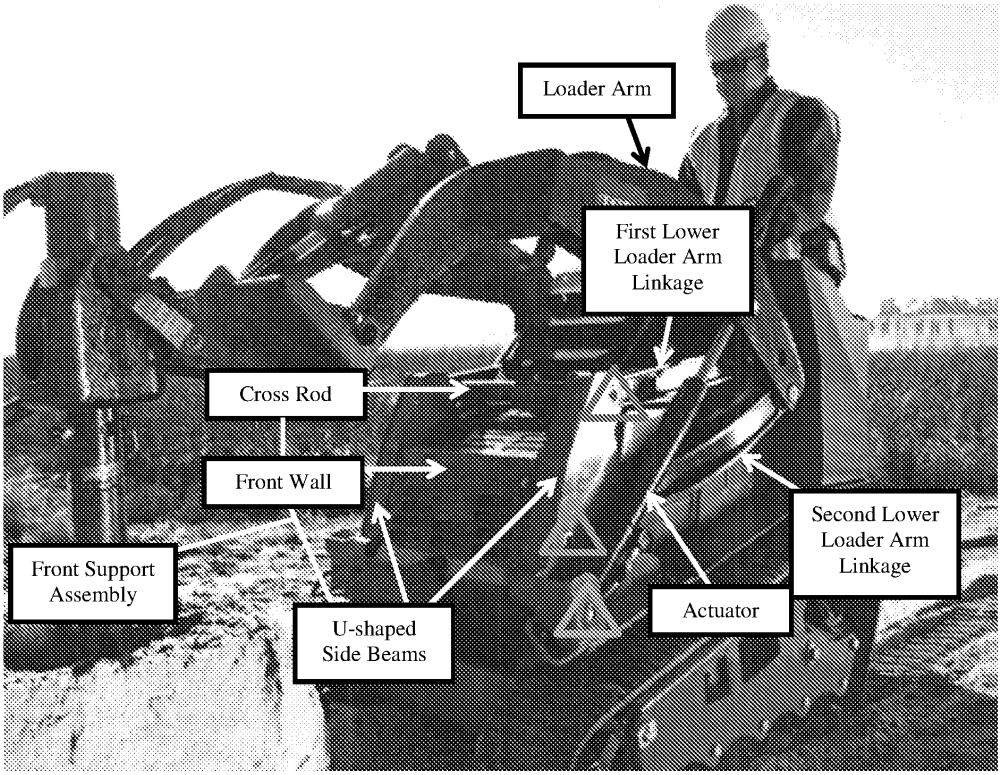

Toro's TX 1000 mini skid steer has a significantly different vertical lift linkage than that disclosed in the '386 patent at issue herein. The TX 1000 is provided with a front support assembly comprising a pair of box like, upwardly extending, U-shaped side beams that are united by a front wall and a laterally extending cross rod. Together, the side beams, front wall and cross rod collectively form a strong front support assembly. **All** of the vertical lift linkage components, namely the two loader arm linkages and the actuator, are connected at their rear ends to the loader arm to be pivotally connected at their front ends to the robust front assembly. **All** of the vertical lift linkage components then extend forwardly from their connection to the loader arm to have their front ends pivotally connected to the front support assembly as indicated by the pivots shown in the red, blue and green triangles. In fact, the pivots for the two loader arm linkages shown in the red and green triangles are housed within the U-shaped cross section of the corresponding left or right side beam for additional strength.

Toro has a pending U.S. patent application relating to its TX 1000 mini skid steer loader that was published by the PTO as US-2016-0244937-A1, a copy of which is being submitted

herewith to the PTO for informational purposes only. Both the Toro application and the application that led to the '386 patent at issue herein claim priority to provisional applications that were filed by Toro and the Patent Owner on the same day, namely on February 20, 2015. Toro's provisional application was filed four minutes earlier that the Patent Owner's provisional application. The filing date of February 20, 2015 was a few days prior to the beginning of the 2015 Rental Show of the American Rental Association at which both the Patent Owner and Toro debuted their respective versions of a mini skid steer equipped with a vertical lift linkage to the public.

The Court of Appeals for the Federal Circuit discussed the probative value of simultaneous invention in *Ecolochem, Inc. v. Southern California Edison Co.*, 227 F.3d 1361 (Fed. Cir. 2000). In upholding the District Court's finding that simultaneous invention by different parties favored a finding of obviousness, the CAFC noted the following:

> ""The fact of near-simultaneous invention, though not determinative of statutory obviousness, is strong evidence of what constitutes the level of ordinary skill in the art." *The Int'l Glass Co. v. United States*, 187 Ct.Cl.376, 408 F.2d 395, 405 (1969). "[T]he possibility of near simultaneous invention by two or more equally talented inventors working independently, ... may or may not be an indication of obviousness when considered in light of all the circumstances." *Lindemann*, 730 F.2d at 1460, 221 USPQ at 487." 227 F.3d at 1379.

The fact that Toro and the Patent Owner, working independently of one another and without knowledge of the other's work, simultaneously invented a mini skid steer loader with a vertical lift linkage provides strong evidence of the obviousness of the invention to one of ordinary skill in the art at the time of the invention. Both Toro and the Patent Owner had to have embarked substantially simultaneously on engineering projects to design, prototype, test, and refine the mini skid steers that became Toro's TX 1000 and the Patent Owner's CTX50, respectively. Both Toro and the Patent Owner filed provisional applications on the same day only four minutes apart to protect their work. Both Toro and the Patent Owner publicly introduced their products at the same trade show. As noted in *Ecolochem*, this is strong objective evidence of the obviousness of the invention disclosed and claimed in the '386 patent.

B. No Long Felt But Unmet Need

A long felt need for an invention, which need was recognized by those of ordinary skill in the art but was unmet or unresolved until the invention, can be evidence of the non-obviousness of the invention. However, where the need for an invention arises only after a market matures and economic conditions are ripe for the introduction of a product incorporating an invention and that need is soon satisfied by a manufacturer seeking to capitalize on developing market opportunities, the need cannot be said to be long felt. In fact, the substantially immediate satisfaction of the need by an inventor tends to prove the reverse, that the invention was obvious.

That is the situation here. As soon as there was sufficient demand for a vertical lift mini skid steer product and the time was right to justify a capital investment to develop such a product, the need was met in short order. In fact, as described earlier in the section discussing simultaneous invention, the need for a vertical lift mini skid steer was substantially immediately satisfied not by one manufacturer but by two, e.g. by both the Patent Owner and by Toro.

Toro is submitting herewith a Declaration from Mr. Neil Borenstein. Mr. Borenstein is a Toro employee whose responsibilities relate to the marketing of Toro's mini skid steers or, as Toro refers to them, compact utility loaders. As set forth by Mr. Borenstein, the market in the United States for skid steer loaders that carry a seated operator, which loaders are referred to as "skid steer loaders" when they have four ground engaging wheels or as "compact track loaders" when they have a pair of ground engaging tracks, was about 70,000 to 80,000 units in 2015, the year in which the patent application that led to the '386 patent at issue herein was filed. ('Borenstein Declaration, ¶4). By contrast, the 2015 market in the United States for mini skid steers in which the operator stands on or walks behind the unit was about 8-12% of the 2015 U.S. market for skid steer loaders. ('Borenstein Declaration, ¶5).

It is fair to conclude from this that the market in the United States for mini skid steers is a low volume, niche market. This has been recognized as a factor that justifies delay in addressing a long felt need should such a need exist in the first place. For example, in finding that an assertion of long felt but unmet need was insufficient to overcome an obviousness determination, the District Court in *Tokyo Keiso Co., Ltd. v. SMC Corp.*, 533 F.Supp.2d 1047 (2007) stated as follows:

> "Moreover, given the fact that the flow meter business involves a niche market, it is not surprising that it took a few years for a company to expand on the prior art at issue here." 533 F.Supp.2d at 1060.

The niche market reasoning set forth above is equally applicable to the mini skid steer market to which the '386 patent is directed.

Finally, the effects of the Great Recession[2] must be taken into account in assessing any argument of long felt but unmet need. With respect to the baseline Toro Fiscal Year of 2007 (the period of November 1, 2006 – October 31, 2007) immediately prior to the Great Recession, Toro experienced the following year by year mini skid steer sales performances on a unit volume basis relative to FY 2007. ('Borenstein Declaration, ¶6).

Toro FY 2008 – (11/1/2007-10/31/2008)	42% below FY 2007
Toro FY 2009 – (11/1/2008-10/31/2009)	78% below FY 2007
Toro FY 2010 – (11/1/2009-10/31/2010)	75% below FY 2007
Toro FY 2011 – (11/1/2010-10/31/2011)	53% below FY 2007
Toro FY 2012 – (11/1/2011-10/31/2012)	46% below FY 2007
Toro FY 2013 – (11/1/2012-10/31/2013)	35% below FY 2007
Toro FY 2014 – (11/1/2013-10/31/2014)	15% below FY 2007

As one can see from the above, sales of Toro's mini skid steers declined steadily at the beginning and through the depths of the Great Recession and then began a slow climb back towards the FY 2007 level. It wasn't until Toro FY 2015 (11/1/2014 – 10/31/2015) that Toro's mini skid steer unit volume exceeded Toro FY 2007 unit volume. ('Borenstein Declaration, ¶7). Thus, it took 8 years before unit volumes recovered to the level experienced in FY 2007.

[2] The term "Great Recession" applies to both the U.S. recession, officially lasting from December 2007 to June 2009, and the ensuing global recession in 2009, arising from the collapse of the U.S. housing market and the resulting financial losses relating to mortgage-backed securities and derivatives.

As the Great Recession abated and the mini skid steer market improved, Toro was in a position to begin considering additional investments in new products in this category. Toro initiated an engineering project in March of 2013 to develop what became the Dingo TX 1000 vertical lift compact utility loader. ('Borenstein Declaration, ¶8). In keeping with the fact that mini skid steers were only introduced to the United States in the mid 1990's, that the market for such products is a niche market, and that the normal market growth was significantly impaired for a significant length of time by the Great Recession, there is no basis for concluding that there was a long felt need that was not promptly met. As soon as the mini skid steer market began to call for mini skid steers that could lift more and have greater reach and the economic climate permitted investment in such products, both Toro and the Patent Owner simultaneously responded to and satisfied such need with their respective vertical lift mini skid steer loaders.

C. <u>No Skepticism by Toro</u>

In the "Background of the Invention" section of Toro's published patent application relating to its TX 1000 mini skid steer, there is a paragraph that briefly describes vertical lift loader linkages used in skid steer loaders having a seated operator in the context of their applicability to mini skid steers. That paragraph is reproduced below in its entirety.

> "[007] Finally, the vertical reach of the loader arms on compact utility loaders is somewhat limited. **While high lift loader arms are known on full size skid steer loaders as disclosed in US Patent 5,542,814, the use of such high lift loader arms on a compact utility loader has been considered difficult if not impossible due to size and durability constraints**. Accordingly, it would be a further advance in the art to provide a way of safely and durably providing high lift loader arms on compact utility loaders to extend the vertical reach of such loaders. For example, this would allow a compact utility loader to dump debris or materials at higher elevations than previously, thus allowing the use of larger trucks to accept such debris or materials for transport." (Emphasis Added).

When the second sentence of this paragraph is read alone, the phrase "the use of high lift loader arms on a compact utility loader has been considered difficult if not impossible due to size and durability constraints" might be read as an indication that one of ordinary skill in the art would not have considered the simple substitution of a known vertical lift linkage to a mini skid steer in replacement of its existing radial lift linkage to have been obvious as Toro now asserts in

this Reexamination Request, namely Vermeer in view of Mustang as set forth previously herein. However, nothing could be further from the truth.

The undersigned attorney prepared and filed the Toro patent application in question. At the time I wrote those words, those of ordinary skill in the art, namely the Toro engineers responsible for the vertical lift linkage project, had already developed the Toro TX 1000 mini skid steer with a vertical lift linkage. Clearly, those of ordinary skill in the art had shown no skepticism or hesitation in tackling the job of adapting a vertical lift loader linkage to a mini skid steer and had already been successful in doing that. What the paragraph above reflects was that the object of their design work was to provide a vertical lift mini skid steer with enough strength and durability to do more than what could be achieved simply from slapping a long established vertical lift linkage onto an existing mini skid steer platform.

In addition, when one puts the highlighted sentence of the paragraph above into the context of the entire application, one will see that the Toro patent application later makes very clear that strength and stability of the front support assembly in combination with strength in the components of the vertical lift linkage are key factors in achieving an optimized vertical lift mini skid steer. For example, the Toro patent application summarizes this in the following paragraph describing the ability of the TX 1000 to lift heavy loads.

> "[034] **Together, the configuration of support assembly 33, the configuration of the pairs of lower loader arms 22, 24 and how they are pivotally journalled at their front ends inside the U-shaped support beams 34 of support assembly 33 and at their rear ends inside the U-shaped upper loader arms 20, and the box shaped beam configuration used to form upper loader arms 20 along with box beam 58 that unites such loader arms 20, provide a loader arm assembly 14 having sufficient strength and durability to withstand the loads and stresses involved in high lift operations of heavy loads.** This is all accomplished in a loader arm assembly 14 that neatly and compactly nests around prime mover 8 in its lowermost, fully retracted position shown in Fig. 2. In this regard, hydraulic cylinders 30 extend straight rearwardly as they connect between the side pockets 38 of support assembly 33 and the undersides of upper loader arms 20. To avoid hitting or interfering with such hydraulic cylinders 30, the lower of the two pairs of lower loader arms, namely loader arms 24 that pivot about the axis x_2, are curved to the side to miss hydraulic cylinders 30 as best shown in Fig. 5. **Thus, loader arm assembly 14 is well adapted to the loads it must carry during high lift operations while being tailored to the small form of a compact utility loader 2**. In addition, high lift loader arm assembly 14 maintains the forward reach of the loader arms 20 and dump bucket 16 carried thereon far better than radial loader arms which move somewhat rearwardly as they rise." (Emphasis Added)

In fact, the TX 1000 lived up to its promise. This can be demonstrated in the side by side comparison below of the specifications of the competing CTX50 of the Patent Owner and Toro's TX 1000.[3] The relevant portions of the specifications have been highlighted in yellow in each case.

CTX50 MINI SKID STEER

GENERAL

Length: 75" (190.5 cm)
Width: 35.5" (90.2 cm)
Height: 54.5" (138.4 cm)
Weight: 2100 lb (952.5 kg)
Hinge pin height: 72" (182.9 cm)
Ground clearance: 6" (15.2 cm)
Ground pressure: 4.5 psi (31 kPa)

ENGINE

Make/Model: Kohler Command PRO EFI ECH740
Gross horsepower: 25 hp (18.6 kW)
Torque (max): 38.8 ft-lb (52.6 Nm)
Displacement: 45 cu in (.74 L)
Fuel type: Gasoline
Fuel tank capacity: 4 gal (15.1 L)
Number of cylinders: V-twin
Cooling medium: Air
Max engine operating angle: 25°*
*Engine operating angles do not include safe machine operating angles

PERFORMANCE

ISO-rated operating capacity: 600 lb (272.2 kg)

	DINGO TX 1000 NARROW TRACK 22327
Wheelbase	41" (10 cm)
Ground Clearance	6.0" (15 cm)
Overall Width	33.7" (86 cm
Overall Length	100.7" (256 cm) w/bucket; 81.7" (208 cm) w/o bucket
Overall Height	53.2" (135 cm)
Max Operating Height	105" (267 cm)
Hinge Pin Height	81" (206 cm
Dump Height	61" (155 cm)
Dump Angle	40-degrees
Reach - Fully Raised	24.5" (62 cm)
Ground Speed (F/R)	4.7 mph (7.6 km/h)/ /4.7 mph (7.6 km/h)
Weight	2,610 lbs (1184 kg)
Tip Capacity	2,857 lbs (1,296 kg)
Rated Operating Capacity (35% of Tip Capacity)*	1,000 lbs (454 kg)
Engine	Kubota® D1305
Manufacturer's Gross HP Rating at RPM**	24.9 HP (18.6 kW) @ 2600 rpm

[3] The specifications for the Toro TX 1000 are taken from a Toro brochure entitled Dingo Compact Utility Loaders dated 2016, a copy of which is being submitted herewith.

Note the comparisons between the two products as highlighted above. The Toro TX 1000 is slightly less wide (33.7 inches versus 35.4 inches), slightly less tall (53.2 inches versus 54.5 inches), and slightly longer (81.7 inches versus 75") than the CTX50 of the Patent Owner. However, the Toro TX 1000 is heavier than the CTX50 by 510 lbs. (2610 lbs. versus 2100 lbs.) due at least in part to the strength and durability of the added front support assembly and the design of the components of the vertical lift linkage as implemented in the TX 1000. Yet, the Toro TX 1000 is rated to lift 1,000 lbs. versus the 600 lbs. of the Patent Owner's CTX50. This is an increase of 66% over the CTX50 even though both products use 25 horsepower engines. This performance increase is testament to the fact that Toro was not skeptical about using or adapting a vertical lift linkage to a mini skid steer in terms of whether it could be done in a technical sense, but was rather focused on optimizing the work performance of such an adaptation.

V. No Admissions

The fact that this Request for Reexamination addresses only claims 1, 3-13, 15-18 and 20 of the '386 patent is not an admission by Toro that the other untreated claims of the '386 patent are valid or would be patentable over the prior art relied upon in this Request or other prior art. In addition, the manner in which the prior art relied upon in this Request as applied to claims 1, 3-13, 15-18 and 20 of the '386 patent herein is not an admission by Toro that this is the only way such references could have been applied. Moreover, the selection and use of the particular references relied upon in this Request is not an admission by Toro that the prior art relied upon in this Request is the only prior art that could be applied to the claims of the '386 patent.

VI. Conclusions

Clearly, the prior art relied upon in this Request raises substantial new questions of patentability as to claims 1, 3-13, 15-18 and 20 of the '386 patent. Just as clearly, the prior art relied upon in this Request presents extremely strong and well supported prima facie proposed obviousness rejections of claims 1, 3-13, 15-18 and 20 of the '386 patent as set forth above in

Grounds 1 and 2. To the extent objective evidence relating to obviousness exists, the fact of simultaneous invention supports the prima face case of obviousness under 35 U.S.C. §103(a).

All the requirements for *ex parte* reexamination have been met. It is respectfully requested that the PTO order such reexamination and find that claims 1, 3-13, 15-18 and 20 of the '386 patent are unpatentable.

February 28, 2017

Respectfully submitted,

/James W. Miller/

James W. Miller
Registration No. 27,661
Suite 1960 Rand Tower
527 Marquette Avenue
Minneapolis, MN 55402
Telephone (612) 338-5915

US009321386B1

(12) **United States Patent**
Thomas et al.

(10) **Patent No.: US 9,321,386 B1**
(45) **Date of Patent: Apr. 26, 2016**

(54) **LOW PROFILE COMPACT TOOL CARRIERS**

(71) Applicant: **Vermeer Manufacturing Company**, Pella, IA (US)

(72) Inventors: **Brad Thomas**, Pleasant Hill, IA (US); **Louis Hartke**, Pella, IA (US); **Greg Langenfeld**, Bettendorf, IA (US); **Matt Hutchinson**, Pella, IA (US)

(73) Assignee: **Vermeer Manufacturing Company**, Pella, IA (US)

(*) Notice: Subject to any disclaimer, the term of this patent is extended or adjusted under 35 U.S.C. 154(b) by 0 days.

(21) Appl. No.: **14/691,649**

(22) Filed: **Apr. 21, 2015**

Related U.S. Application Data

(60) Provisional application No. 62/118,860, filed on Feb. 20, 2015.

(51) **Int. Cl.**

B60P 1/50	(2006.01)
B66F 9/075	(2006.01)
B66F 9/22	(2006.01)
B66F 9/06	(2006.01)

(52) **U.S. Cl.**
CPC ... ***B60P 1/50*** (2013.01); ***B66F 9/06*** (2013.01); ***B66F 9/07572*** (2013.01); ***B66F 9/22*** (2013.01)

(58) **Field of Classification Search**
CPC B60P 1/50; B66F 9/06; B66F 9/07572; B66F 9/22; E02F 3/34; E02F 3/3405; E02F 3/3414
USPC 414/685, 686, 722, 909; 180/89.1, 311
See application file for complete search history.

(56) **References Cited**

U.S. PATENT DOCUMENTS

4,117,610	A *	10/1978	Yates	37/409
4,239,444	A *	12/1980	Schmelzer	414/685
5,169,278	A	12/1992	Hoechst et al.	
5,470,190	A	11/1995	Bamford et al.	
5,542,814	A	8/1996	Ashcroft et al.	
5,609,464	A	3/1997	Moffitt et al.	
6,325,589	B1	12/2001	Jang et al.	
6,474,933	B1	11/2002	Hoechst et al.	
6,616,398	B2	9/2003	Dershem et al.	
6,695,568	B2	2/2004	Bares et al.	
7,214,026	B2	5/2007	Hilvers et al.	
7,264,435	B2	9/2007	Layko et al.	
7,695,236	B2 *	4/2010	Green	414/486
7,980,569	B2 *	7/2011	Azure et al.	280/32.5
8,152,433	B2	4/2012	Yamada et al.	

(Continued)

FOREIGN PATENT DOCUMENTS

GB	2368573	A	5/2002
JP	2006307498	A	11/2006

OTHER PUBLICATIONS

ISO 3411:2007, Earth-moving machinery—Physical dimensions of operators and minimum operator space envelope, dated Jul. 2007, pp. 24.

(Continued)

Primary Examiner — Dean Kramer
(74) *Attorney, Agent, or Firm* — Armstrong Teasdale LLP

(57) **ABSTRACT**

Compact tool carriers having a loader mounted to a low-profile mainframe are disclosed. In some embodiments, the pivot points of the mainframe about which the loader is pivoted are low relative to the mainframe to reduce the mainframe size and to lower the center of gravity to improve the stability of the compact tool carrier during use.

20 Claims, 7 Drawing Sheets

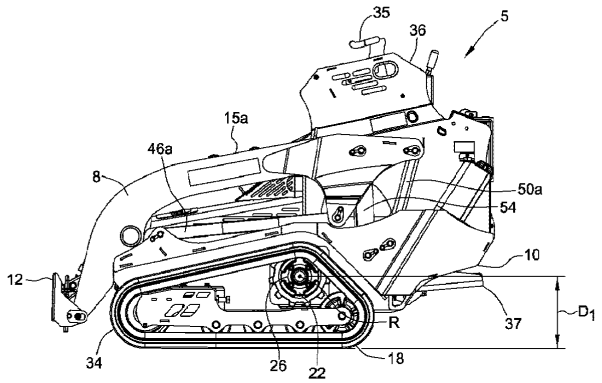

(56) **References Cited**

U.S. PATENT DOCUMENTS

8,821,104	B2 *	9/2014	Yasuda et al.	414/685
2007/0128012	A1	6/2007	Yamada et al.	
2007/0132204	A1	6/2007	Sewell	
2009/0116943	A1 *	5/2009	Valere	414/467
2012/0305025	A1 *	12/2012	Helbig et al.	134/6
2014/0271078	A1	9/2014	Koch	

OTHER PUBLICATIONS

ISO 6682:2008, Earth-moving machinery—Zones of comfort and reach for controls, dated Sep. 2008, pp. 18.
Bobcat, Mini Track Loaders, available before Feb. 20, 2015, pp. 1.
Toro, Dingo Compact Utility Loader, available before Feb. 20, 2015, pp. 1.
Ditch Witch, SK850 Mini Skid Steer, available before Feb. 20, 2015, pp. 1.
Cat, 252B Skid Steer Loader, available before Feb. 20, 2015, pp. 1.
Deere, 318D Skid Steer, available before Feb. 20, 2015, pp. 1.
New Holland, C232 Skid Steer Loader, available before Feb. 20, 2015, pp. 1.
JCB, 150T Tracked Skid Steer, available before Feb. 20, 2015, pp. 1.
Kubota, SVL75 Compact Track Loader, available before Feb. 20, 2015, pp. 1.
Gehl, V270 Vertical Lift Skid Loader, available before Feb. 20, 2015, pp. 1.
Bobcat, T190 Compact Track Loader, available before Feb. 20, 2015, pp. 1.
Yanmar, S-28-V Skid Steer, available before Feb. 20, 2015, pp. 1.

* cited by examiner

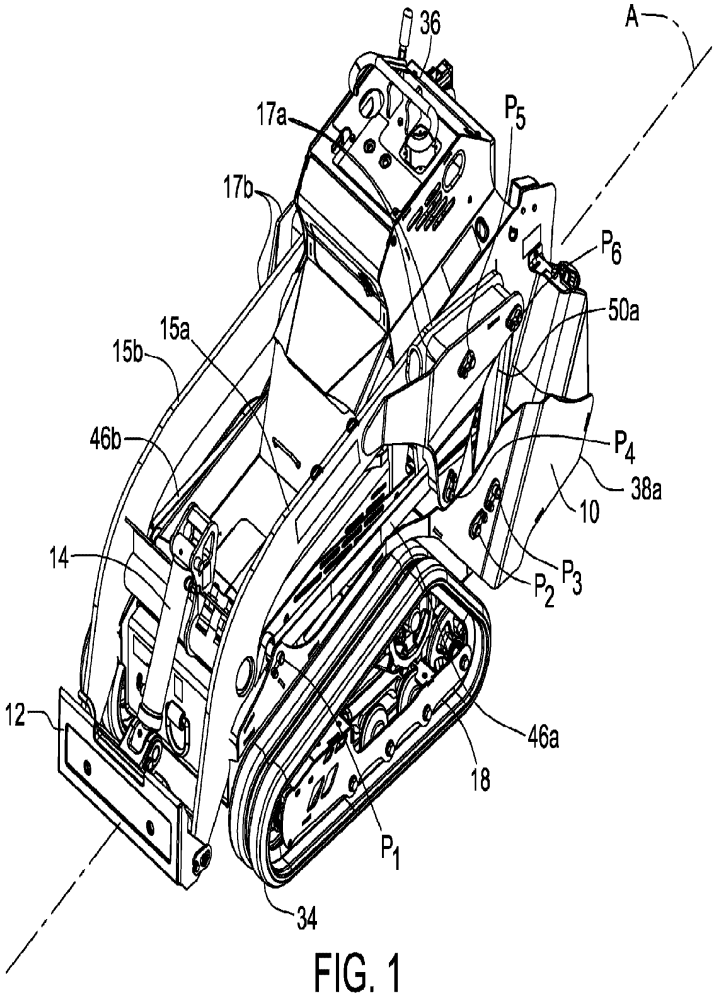

FIG. 1

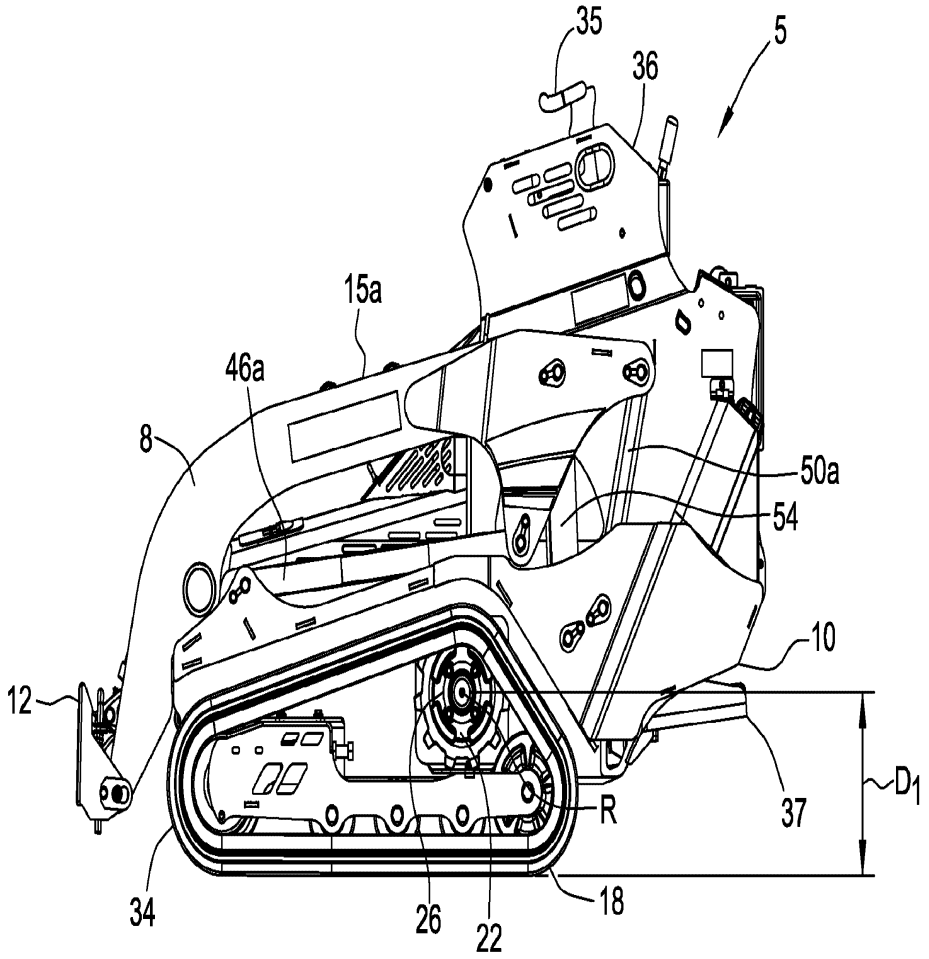

FIG. 2

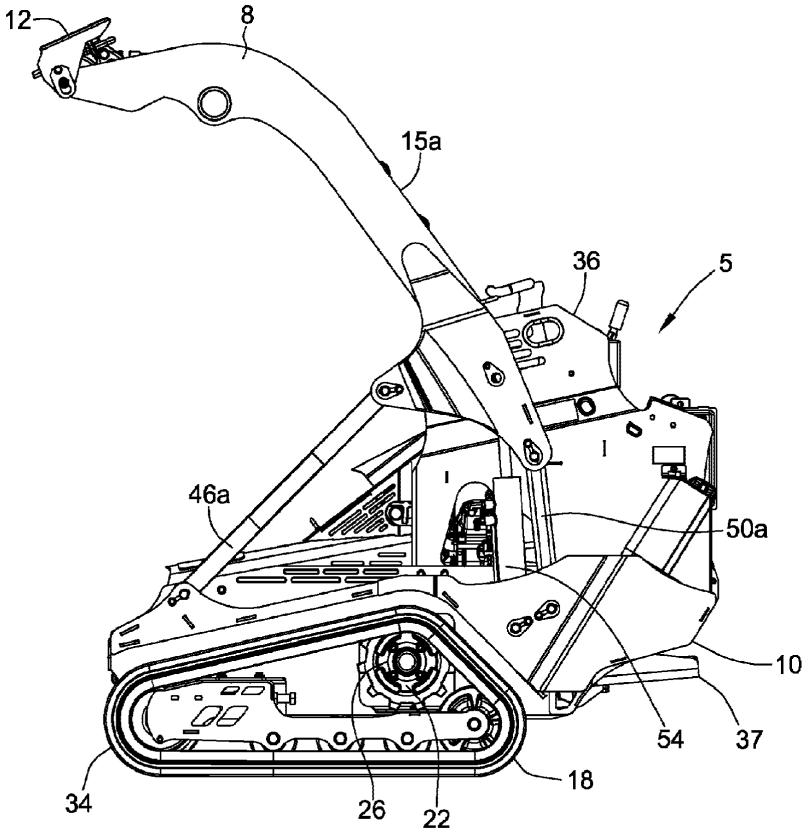

FIG. 3

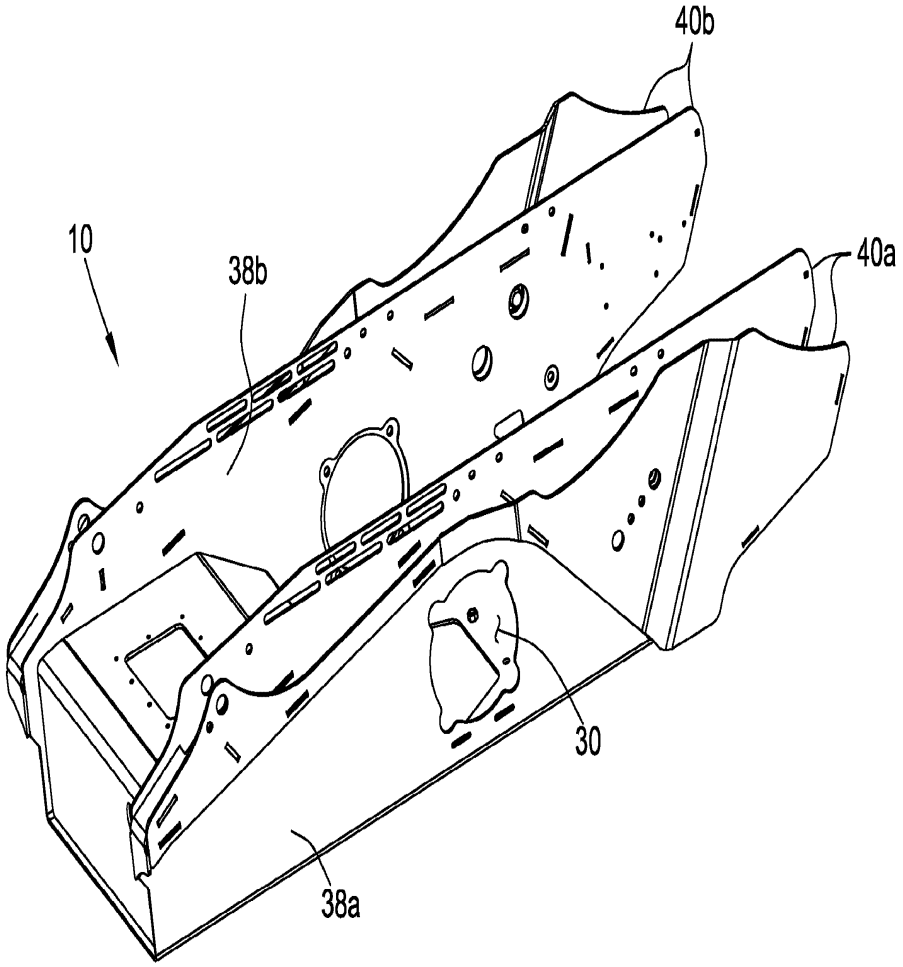

FIG. 4

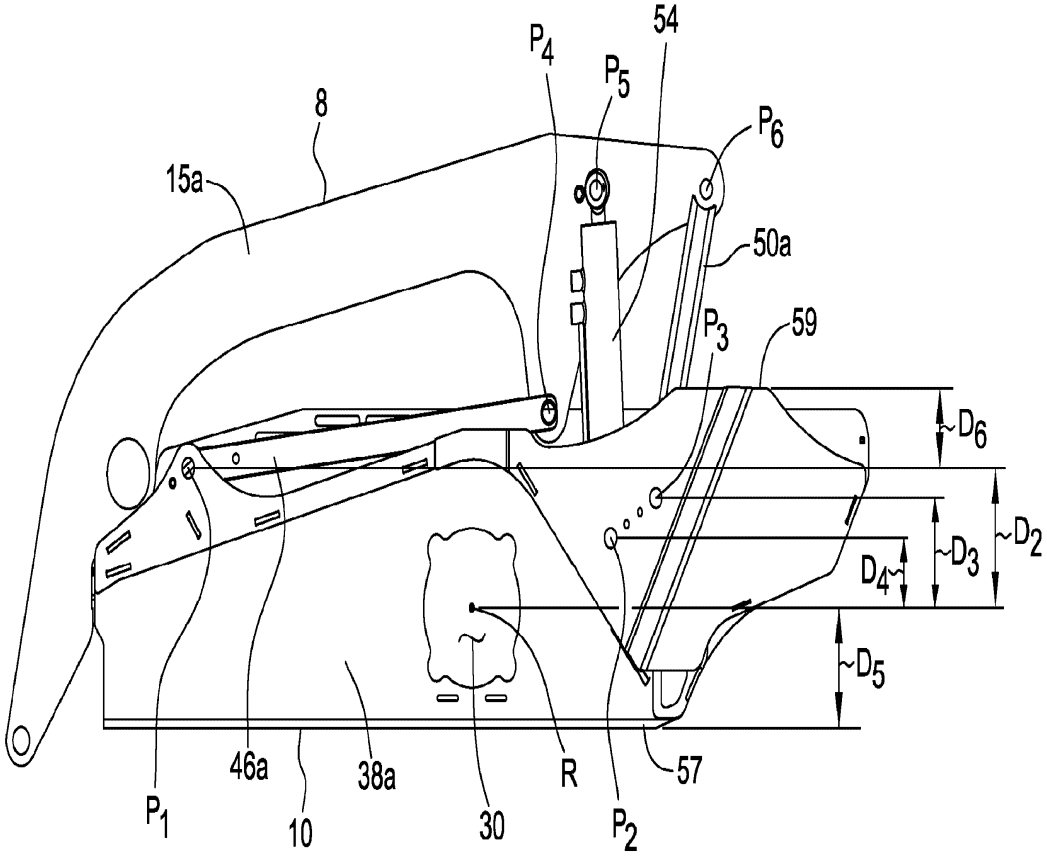

FIG. 5

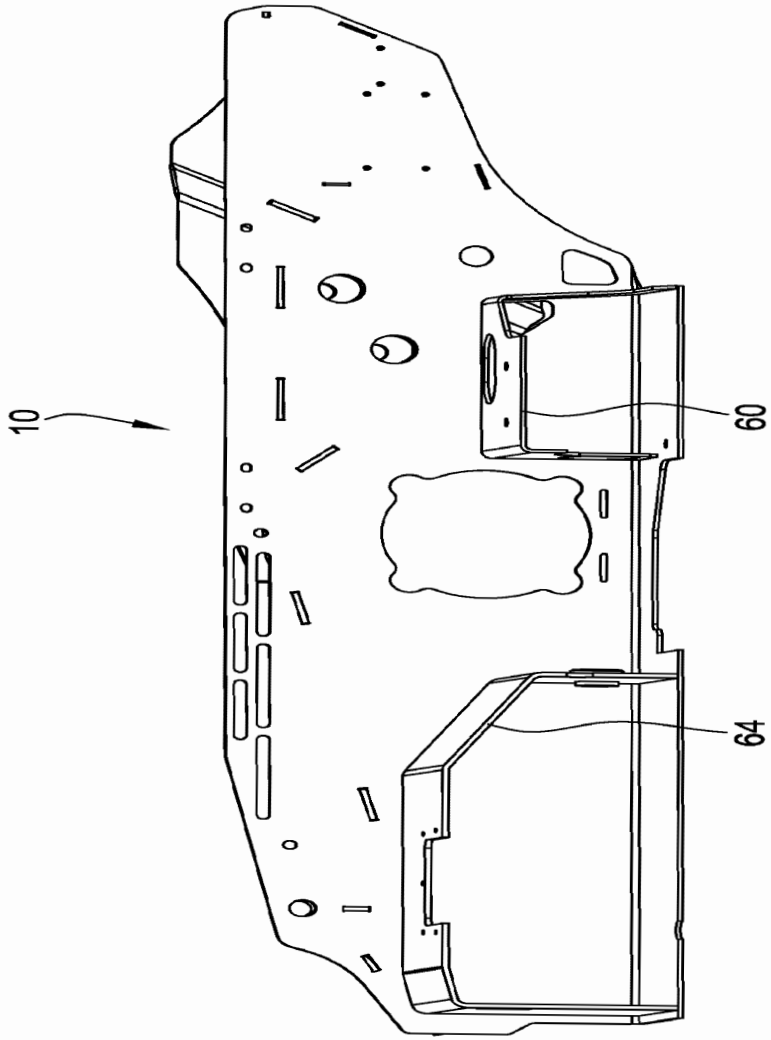

FIG. 6

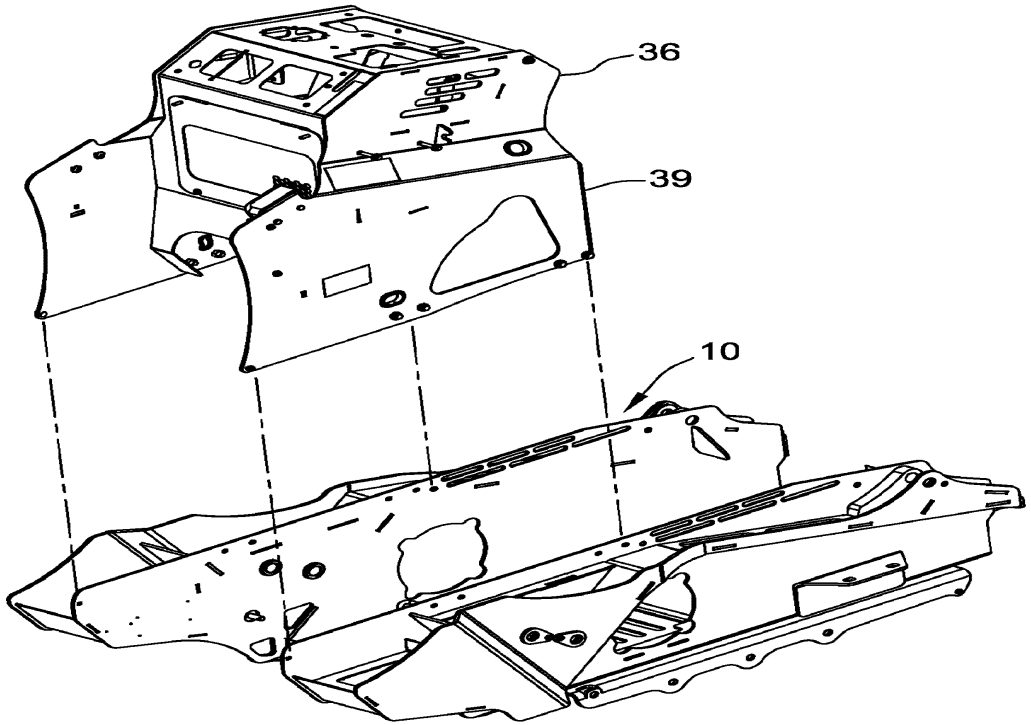

FIG. 7

EX1029 / Page 284 of 292
Kubota North America Corporation et al

LOW PROFILE COMPACT TOOL CARRIERS

CROSS-REFERENCE TO RELATED APPLICATION

This application claims the benefit of U.S. Provisional Patent Application No. 62/118,860, filed Feb. 20, 2015, which is incorporated herein by reference in its entirety.

FIELD OF THE DISCLOSURE

The field of the disclosure relates to compact tool carriers having a loader mounted to a low-profile mainframe.

BACKGROUND

Compact tool carriers are tool-mounted machines that are capable of working in tight spaces for utility or do-it-yourself home projects. Compact tool carriers are walk-behind units or include a platform on which the operator may stand during use. Compact tool carriers are generally defined (e.g., ISO 6165 (2012) and SAE J2752) as "a self-propelled crawler or wheeled machine having an operating mass of less than 1500 kg with a rigid frame, having either a pedestrian operating position or a standing operator platform at the rear of the machine and either front-mounted interchangeable equipment or lift arms with an attachment bracket capable of coupling to interchangeable, front-mounted attachments." The tool carriers may be attached to a variety of interchangeable tools such as buckets, augers, forks, stump grinders, tillers, rollers and the like.

Compact tool carriers may be distinguished from much larger conventional skid steers in which an operator is seated in the operating position. Compact tool carriers pose difficulty in design relative to full-size skid steers due to variation in weight, complexity and size.

A continuing need exists for compact tool carriers with a relatively low-profile, compact design and/or that are characterized by a more effective loader lifting profile.

This section is intended to introduce the reader to various aspects of art that may be related to various aspects of the disclosure, which are described and/or claimed below. This discussion is believed to be helpful in providing the reader with background information to facilitate a better understanding of the various aspects of the present disclosure. Accordingly, it should be understood that these statements are to be read in this light, and not as admissions of prior art.

SUMMARY

One aspect of the present disclosure is directed to a compact tool carrier configured for standing or walk-behind operator control. The carrier has a mass of less than about 1500 kg and includes a loader having an arm and a linkage pivotally attached to the loader arm. An actuator is pivotally attached to the loader arm. The carrier includes a control station having operator controls for propelling the compact tool carrier forward and for raising and lowering the loader. The control station is configured for remote operation or is mounted toward the rear of the compact tool carrier and is adapted to allow for standing or walk-behind operation.

Another aspect of the present disclosure is directed to a compact tool carrier. The carrier comprises a loader and a mainframe for supporting the loader. The mainframe has a first side and a second side with each side having a top and a bottom. The first side of the mainframe has at least two pivot points relative to the loader. The carrier includes a drive mechanism comprising tracks or wheels for propelling the apparatus over a supporting surface. The drive mechanism is attached to the mainframe about a rotational axis. The compact tool carrier has a bottom at which the drive mechanism contacts the supporting surface. The rotational axis and bottom of the compact tool carrier are separated by a vertical distance D1. The rotational axis and each pivot point are separated by a vertical distance. Each vertical distance between the rotational axis and a pivot point is less than 1.5 times D**1**.

Various refinements exist of the features noted in relation to the above-mentioned aspects of the present disclosure. Further features may also be incorporated in the above-mentioned aspects of the present disclosure as well. These refinements and additional features may exist individually or in any combination. For instance, various features discussed below in relation to any of the illustrated embodiments of the present disclosure may be incorporated into any of the above-described aspects of the present disclosure, alone or in any combination.

BRIEF DESCRIPTION OF THE DRAWINGS

FIG. **1** is a perspective view of a compact tool carrier with the loader in a down position;

FIG. **2** is a side view of the compact tool carrier with the loader in a down position;

FIG. **3** is a side view of the compact tool carrier with the loader in a raised position;

FIG. **4** is a perspective view of a mainframe of the compact tool carrier;

FIG. **5** is a side view of the mainframe and loader of the compact tool carrier;

FIG. **6** is a cross-section side view of the mainframe; and

FIG. **7** is an exploded perspective view of the mainframe and an upper frame of the compact tool carrier.

Corresponding reference characters indicate corresponding parts throughout the drawings.

DETAILED DESCRIPTION

An embodiment of a compact tool carrier is generally referred as "**5**" in FIG. **1**. The compact tool carrier **5** includes a loader **8** supported by a mainframe **10**. The loader **8** includes an attachment plate **12** for interchangeably attaching any one of a number of tools (not shown). In this regard, such interchangeable tools do not form part of the compact tool carrier **5** unless stated otherwise. The attachment plate **12** is connected to an actuator **14** for tilting of tools connected to the attachment plate **12**. The loader **8** has a first arm **15***a* and a second arm **15***b* generally opposite the first arm **15***a*. Each arm **15***a*, **15***b* may be a single weldment or may include various components attached by fasteners (e.g., nuts and bolts). The first and second arms **15***a*, **15***b* each include a bracket portion **17***a*, **17***b* (FIG. **1**) for fastening various linkages.

As used herein, "compact tool carrier" refers to machines that are self-propelled and are capable of carrying interchangeable equipment and that generally have a mass (not including the interchangeable tool) of less than about 1500 kg (about 3307 lb). Use of the term "compact tool carrier" herein is intended to exclude full size skid steers (e.g., seat-operated units) due to a large variation in weight, complexity and size. In some embodiments, the compact tool carrier **5** meets the definition of a compact tool carrier provided in ISO 6165

(2012) and SAE J2752 set forth above, both standards being incorporated herein by reference for all relevant and consistent purposes.

The compact tool carrier **5** includes a longitudinal axis A that is parallel to the direction of travel of the carrier (i.e., parallel to its length). The compact tool carrier **5** is generally longitudinally symmetrical (i.e., relative to the longitudinal axis A) in that several components have a corresponding component with the same function opposite the component (i.e., across the axis A). Corresponding components of the pair may be indicated herein by use of a reference number followed by "A" and "B" and may be referred to as a "first" component and a "second" component, respectively. While the compact tool carrier **5** may be described herein with reference to the components of one side of the compact tool carrier **5**, any component designated by "A" or "B" herein or shown in FIGS. **1-7** includes a corresponding component with the same function opposite the component.

The compact tool carrier **5** includes a drive mechanism **18** attached to the mainframe **10**. In the illustrated embodiment, the drive mechanism **18** is directly mounted (i.e., connected without intermediary parts) to the mainframe **10** by way of drive sprocket **22** connected to a hub **26** (FIG. **2**). The hub **26** is attached to a shaft (not shown) that extends through a drive opening **30** (FIG. **4**) of the mainframe **10**. The sprocket **22**, hub **26** and shaft (not shown) rotate about a rotational axis R (FIG. **5**). As shown, the drive mechanism **18** includes tracks **34**. In other embodiments, the drive mechanism **10** includes wheels.

The compact tool carrier **5** includes a control station **36** (FIG. **1**) which may include controls (not all controls being shown) for propelling the compact tool carrier **5** forward and/or for raising and lowering the loader **8**. The control station **36** may be mounted toward the rear of the compact tool carrier **5** (i.e., opposite the attachment plate **12**) and is generally adapted to allow for standing or walk-behind operation. As used herein, "standing operation" generally refers to operation in which the operator stands on a platform attached to the compact tool carrier while "walk-behind operation" generally refers to operation in which the operator stands on the surface supporting the compact tool carrier **5**. In the illustrated embodiment, the compact tool carrier **5** includes an operator platform **37** (FIG. **2**).

In embodiments in which the compact tool carrier **5** includes an operator platform **37** for standing operation, the difference between the height of the control station **36** (e.g., as measured from the highest control for operating the loader or propelling the apparatus forward) and the platform **37** may be at least about 90 cm (e.g., from about 90 cm to about 130 cm). In embodiments in which the operator walks behind the compact tool carrier **5**, the control station **36** may be at least about 90 cm (e.g., from about 90 cm to about 130 cm) from the surface supporting the compact tool carrier. Such a range generally complies with the zones of comfort and reach for controls in earth-moving equipment set forth in ISO 6682 (2008) as determined from the physical dimensions of operators and minimum operator space envelope as set forth in ISO 3411 (2007), both of which are incorporated herein by reference for all relevant and consistent purposes.

In the illustrated embodiment, the control station **36** is attached to an upper frame **39** (FIG. **7**) that is attached and supported by the mainframe **10**. In other embodiments, rather than being integrated as one unit in the compact tool carrier **5**, the control station **36** is separate from the body (e.g., mainframe) of the carrier and is operated remotely. In such embodiments, the control station **36** may be wired or may operate wirelessly to propel the carrier **5** and/or raise and lower the loader **8**.

The mainframe **10** includes a first side **38***a* and a second side **38***b* generally opposite the first side **38***a*. As used herein, the term "mainframe" generally refers to a single weldment to which the loader **8** is attached, optionally through one or more pivotal linkages. The mainframe **10** includes bracket portions **40***a*, **40***b* (FIG. **4**) through which various pivot linkages are attached. In the illustrated embodiment, the engine (not shown) and the drive mechanism **18** comprising tracks or wheels are directly connected to the mainframe **10**.

The first loader arm **15***a* is pivotally connected to the first side **38***a* of the mainframe **10**, and the second loader arm **15***b* is pivotally connected to the second side **38***b* of the mainframe **10**. The loader arms **15***a*, **15***b* and sides **38***a*, **38***b* of the mainframe **10** each include three pivot points for pivoting the loader **8** relative to the mainframe **10**. The first side **38***a* of the mainframe **10** includes a forward pivot point P_1 (FIG. **5**) a rear pivot point P_3 and a central pivot point P_2 between the forward pivot point P_1 and the rear pivot point P_3. Similarly, the first arm **15***a* includes a forward pivot point P_4, a rear pivot point P_6 and a central pivot point P_5 between the forward pivot point P_4 and the rear pivot point P_6. The compact tool carrier **5** includes a first forward linkage **46***a* attached to the first side **38***a* of the mainframe **10** at its forward pivot point P_1 and attached to the first arm **15***a* at its forward pivot point P_4. A first rear linkage **50***a* is attached to the first side **38***a* of the mainframe **10** at its rear pivot point P_3 and is attached to the first arm **15***a* of the loader **8** at its rear pivot point P_6. While the carrier **5** is shown with two loader linkages **46***a*, **50***a* on each side of the carrier **5**, in other embodiments the carrier **5** includes a single linkage.

An actuator **54**, shown as a hydraulic cylinder, is attached to the first side **38***a* of the mainframe **10** at its center pivot point P_2 and is attached to the loader arm **15***a* at its center pivot point P_5 to raise the loader **8**. The compact tool carrier **5** may include a single actuator **54**, or, as in other embodiments, a second actuator (not shown) is connected to the second side **38***b* (FIG. **4**) of the mainframe **10** and the second arm **15***b* (FIG. **1**). The actuator **54** is powered to raise the loader **8** and, in some embodiments, is also powered to lower the loader **8** (as opposed to a one-way actuator lowered by gravity alone).

The second side **38***b* (FIG. **4**) of the mainframe **10** may include a forward pivot point and a rear pivot point to which a second forward linkage **46***b* (FIG. **1**) and second rear linkage (not shown) are respectively attached. The second arm **15***b* may also include a forward pivot point and rear pivot point to which the second forward linkage **46***b* and second rear linkage are attached. In embodiments in which the compact tool carrier **5** includes a second actuator (not shown), the second side **38***b* of the mainframe **10** includes a central pivot point between its forward pivot point and its rear pivot point, and the second arm **15***b* also includes a central pivot point between its forward pivot point and its rear pivot point. The second cylinder may be attached to the central pivot point of the second side **38***b* of the mainframe **10** and the central pivot point of the second arm **15***b*.

In some embodiments, the first and second ends **38***a*, **38***b* of the mainframe **10** and the first and second loader arms **15***a*, **15***b* do not include more than three pivot points at which the mainframe **10** and loader **8** pivot relative to each other. While the actuator **54** is shown as being attached between the other two linkages **46***a*, **50***a*, in other embodiments the actuator **54** is forward to both linkages **46***a*, **50***a* or rearward to both

linkages **46***a*, **50***a*. Further, each side of the carrier **5** having an actuator **54** may include a single linkage rather than two linkages.

In some embodiments, the mainframe **10** is characterized by a relatively low profile (i.e., the pivot points are positioned relatively low on the mainframe allowing its height to be reduced). The rotational axis R (FIG. **5**) and the bottom of the compact tool carrier **5** (FIG. **2**) are separated by a distance D**1**. Generally, the bottom of the compact tool carrier **5** corresponds to the point at which the drive mechanism **18** contacts the surface supporting the compact tool carrier **5**. The rotational axis R and the forward pivot point P_1 of the first side **38***a* of the mainframe **10** are separated by a vertical distance D**2**. The rotational axis R and the rear pivot point P_3 are separated by a vertical distance D**3**. The rotational axis R and the central pivot point P_4 are separated by a vertical distance D**4**. Each of D**2**, D**3** and D**4** is less than about 1.5 times D**1** (1.5×D**1**). In some embodiments, each of D**2**, D**3** and D**4** is less than D**1** or even less than about 0.75 times D**1** (0.75×D**1**).

The mainframe **10** profile may also be expressed relative to the distance D**5** between the rotational axis R (FIG. **5**) and the bottom **57** of the mainframe **10**. Each of D**2**, D**3** and D**4** is less than about twice D**5** (2×D**5**). In some embodiments, each of D**2**, D**3** and D**4** is less than about 1.75 times D**5** (1.75×D**5**) or less than about 1.5 times D**5** (1.5×D**5**). P**2** and P**3** may be relatively lower than P**1** and their distances D**3**, D**4** from the rotational axis R may be even less than about 1.25 times D**5** (1.25×D**5**). The distance D**6** between the top **59** of the first side **38***a* of the mainframe **10** and the highest pivot point (P_1 in the illustrated embodiment), is less than about 1.5 times D**5**, less than about D**5** or less than about 0.75 times D**5**.

The second side **38***b* (FIG. **1**) of the mainframe **10** may have a similar pivot point arrangement. The rotational axis R and the forward pivot point of the second side **38***b* are separated by a vertical distance D**2'** (not shown). The rotational axis R and the rear pivot point of the second side are separated by a vertical distance D**3'** (not shown). The rotational axis R and the central pivot point (if any) of the second side **38***b* of mainframe **10** are separated by a vertical distance D**4'** (not shown). Each of D**2'**, D**3'** and D**4'** is less than about 1.5 times D1 (1.5×D**1**) or less than D**1** or even less than about 0.75 times D1 (0.75×D**1**). The rotational axis R and the bottom of the second side **38***b* of the mainframe **10** are separated by a vertical distance D**5'** (not shown). Each of D**2'**, D**3'** and D**4'** is less than twice D**5'** (2×D**5'**) or less than about 1.75 times D**5'** (1.75×D**5'**) or less than about 1.5 times D**5'** (1.5×D**5'**). D**3'** and D**4'** may be even less than about 1.25 times D**5'** (1.25×D**5'**). The distance D**6'** between the top of the second side **38***b* of the mainframe **10** and the highest pivot point is less than about 1.5 times D**5'**, less than about D**5'** or less than about 0.75 times D**5'**.

The compact tool carrier **5** includes an engine (not shown) for propelling the drive mechanism **18**. As shown in FIG. **6**, the engine may be mounted to an engine bracket **60** that forms part of the mainframe **10**. The engine may drive a hydraulic pump that powers hydraulic motors (not shown) which drive the drive mechanism **18** (FIG. **1**) and which provide hydraulic power to actuator **54**. The mainframe **10** includes a reservoir **64** for storing and cycling of hydraulic fluid.

Compared to conventional compact tool carriers, embodiments of the compact tool carrier **5** described above have several advantages. By positioning the pivot points relatively low on the mainframe **10**, the mass of the mainframe **10** and the resulting cost of the carrier **5** may be reduced. Further, such a low-profile mainframe **10** improves visibility for the operator and allows the center of gravity of the carrier **5** to be lowered which improves its stability. In embodiments in which the carrier **5** includes an actuator **54** (FIG. **5**) for lifting the loader **8** that is disposed between forward linkage **46***a* and a rear linkage **50***a* on at least one side **38***a*, **38***b* of the mainframe **10**, the loader **8** is characterized by an travel path in which the loader travels vertically rather than over a radial path. The vertical travel path of the loader **8** is more effective relative to conventional travel paths for compact tool carriers **5** as the carrier **5** may operate closer to other structures.

As used herein, the terms "about," "substantially," "essentially" and "approximately" when used in conjunction with ranges of dimensions, concentrations, temperatures or other physical or chemical properties or characteristics is meant to cover variations that may exist in the upper and/or lower limits of the ranges of the properties or characteristics, including, for example, variations resulting from rounding, measurement methodology or other statistical variation.

When introducing elements of the present disclosure or the embodiment(s) thereof, the articles "a", "an", "the" and "said" are intended to mean that there are one or more of the elements. The terms "comprising," "including," "containing" and "having" are intended to be inclusive and mean that there may be additional elements other than the listed elements. The use of terms indicating a particular orientation (e.g., "top", "bottom", "side", etc.) is for convenience of description and does not require any particular orientation of the item described.

As various changes could be made in the above constructions and methods without departing from the scope of the disclosure, it is intended that all matter contained in the above description and shown in the accompanying drawing[s] shall be interpreted as illustrative and not in a limiting sense.

What is claimed is:

1. A compact tool carrier configured for standing or walk-behind operator control and having a longitudinal axis and a mass of less than about 1500 kg, the compact tool carrier comprising:

a loader having an arm, the loader being adapted to carry a tool;

a mainframe for supporting the loader, the mainframe having a first side and a second side, and having a front end and a rear end relative to the longitudinal axis, the mainframe comprising an engine bracket that extends from the first side toward the second side for mounting an engine to the mainframe, the engine bracket being spaced from the rear end of the mainframe, the loader arm not being directly attached to the mainframe;

a linkage pivotally attached to the first side of the mainframe and pivotally attached to the loader arm;

an actuator pivotally attached to the first side of the mainframe and pivotally attached to the loader arm; and

a control station having operator controls for propelling the compact tool carrier forward and for raising and lowering the loader, the control station being mounted toward the rear of the compact tool carrier and adapted to allow for standing or walk-behind operation.

2. The compact tool carrier as set forth in claim **1** wherein the mainframe incorporates a single weldment.

3. The compact tool carrier as set forth in claim **1** wherein the loader arm is a first loader arm and the linkage is a first linkage, the loader comprising a second loader arm and the compact tool carrier comprising a second linkage pivotally attached to the second side of the mainframe and pivotally attached to the second loader arm.

4. The compact tool carrier as set forth in claim **3** wherein the actuator is a first actuator, the compact tool carrier comprising a second actuator, the second actuator being pivotally

attached to the second side of the mainframe and pivotally attached to the second loader arm.

5. The compact tool carrier as set forth in claim **1** comprising a drive mechanism comprising tracks or wheels, the drive mechanism being attached to the mainframe.

6. The compact tool carrier as set forth in claim **1** comprising an engine to propel a drive mechanism, the engine being attached to the engine bracket.

7. The compact tool carrier as set forth in claim **1** wherein the actuator is a hydraulic cylinder.

8. The compact tool carrier as set forth in claim **1** wherein each loader arm incorporates a single weldment.

9. The compact tool carrier as set forth in claim **1** wherein the control station is mounted toward the rear of the compact tool carrier, the compact tool carrier comprising an operator platform for standing operation of the compact tool carrier, the difference between the height of the control station and the height of the platform being at least 90 cm.

10. The compact tool carrier as set forth in claim **1** wherein the control station is mounted toward the rear of the compact tool carrier, and the height of the control station from a surface supporting the compact tool carrier is at least 90 cm.

11. A method for operating the compact tool carrier as set forth in claim **1**, the method comprising standing behind the compact tool carrier and operating the control station to propel the compact tool carrier forward and/or raise or lower the loader.

12. The method as set forth in claim **11** wherein the control station is operated while standing on an operator platform or while standing on a surface supporting the compact tool carrier.

13. The compact tool carrier as set forth in claim **1** further comprising a tool attached to the loader, the tool being selected from the group consisting of a bucket, auger, fork, stump grinder, tiller and roller.

14. The compact tool carrier as set forth in claim **1** wherein a single linkage is attached to the first side of the mainframe and pivotally attached to the loader arm.

15. A compact tool carrier comprising:

a loader adapted to carry a tool;

a mainframe for supporting the loader, the mainframe having a first side and a second side, and having a front end and a rear end relative to the longitudinal axis, the mainframe comprising an engine bracket that extends from the first side toward the second side for mounting an engine to the mainframe, the engine bracket being spaced from the rear end of the mainframe, each side having a top and a bottom, the first side of the mainframe having at least two pivot points relative to the loader, the loader not being directly attached to the mainframe;

a linkage pivotally attached to the first side of the mainframe at a pivot point and pivotally attached to the loader;

an actuator pivotally attached to the first side of the mainframe at a pivot point and pivotally attached to the loader;

a drive mechanism comprising tracks or wheels for propelling the compact tool carrier over a supporting surface, the drive mechanism being attached to the mainframe about a rotational axis, the compact tool carrier having a bottom at which the drive mechanism contacts the supporting surface, the rotational axis and bottom of the compact tool carrier being separated by a vertical distance D**1**, the rotational axis and each pivot point being separated by a vertical distance, each vertical distance between the rotational axis and a pivot point being less than 1.5 times D**1**; and

a control station having operator controls for propelling the compact tool carrier forward and for raising and/or lowering the loader, the control station being mounted toward the rear of the compact tool carrier and adapted to allow for standing or walk-behind operation.

16. The compact tool carrier as set forth in claim **15** wherein the rotational axis and the pivot point at which the linkage is attached are separated by a vertical distance D**2**, the rotational axis and the pivot point at which the actuator is attached are separated by a vertical distance D**3**, both D**2** and D**3** being less than 1.5 times D**1**.

17. The compact tool carrier as set forth in claim **16** wherein the second side of the mainframe comprises two pivot points, each vertical distance between the rotational axis and a pivot point being less than 1.5 times D**1**.

18. The compact tool carrier as set forth in claim **16** wherein the rotational axis and the bottom of the first side of the mainframe are separated by a vertical distance D**5**, both D**2** and D**3** being less than twice D**5**.

19. The compact tool carrier as set forth in claim **18** wherein the first side of the mainframe comprises a top most pivot point, the top most pivot point and the top of the first side of the mainframe being separated by a vertical distance D**6**, D**6** being less than about 1.5 times D**5**.

20. The compact tool carrier as set forth in claim **15** further comprising a tool attached to the loader, the tool being selected from the group consisting of a bucket, auger, fork, stump grinder, tiller and roller.

* * * * *

IN THE UNITED STATES PATENT AND TRADEMARK OFFICE

In re Patent of:	)
	)
Brad Thomas	)
	)
Patent No. 9,321,386	)
	)
Issued April 26, 2016	)
	)
For LOW PROFILE COMPACT TOOL CARRIERS	)

DECLARATION OF NEIL BORENSTEIN

Mail Stop *Ex Parte* Reexam
Commissioner for Patents
P.O. Box 1450
Alexandria, VA 22313-1450

Sir:

I, Neil Borenstein, do hereby declare and state as follows:

1. I received a Bachelor of Science degree, Electrical Engineering, from the University of Wisconsin – Madison, in 1984; and a Masters of Science of Industrial Administration degree (now call a Masters of Business Administration), from Carnegie Mellon University, in 1989.

2. I have been an employee of The Toro Company for 21 years. For the last 12 years, I have worked in Toro's Siteworks Division, marketing compact utility equipment including mini skid steer loaders. Toro refers to mini skid steer loaders as compact utility loaders.

3. My current title is Director of Marketing, Siteworks Division. I have held this position approximately for the last 3 years. My responsibilities include product development,

promotion, market analysis, long range and annual planning for Toro specialty construction business.

4. I estimate that the market in the United States for skid steer loaders that carry a seated operator, which loaders are referred to as "skid steer loaders" when they have four ground engaging wheels or as "compact track loaders" when they have a pair of ground engaging tracks, was about 70,000-80,000 units in 2015.

5. By contrast, I estimate that the 2015 market in the United States for mini skid steers in which the operator stands on or walks behind the unit was about 8-12% of the 2015 U.S. market for skid steer loaders.

6. With respect to the baseline Toro Fiscal Year of 2007 (the period of November 1, 2006 – October 31, 2007), Toro experienced the following year by year mini skid steer sales performances on a unit volume basis relative to FY 2007:

Toro FY 2008 – (11/1/2007-10/31/2008)	42% below FY 2007
Toro FY 2009 – (11/1/2008-10/31/2009)	78% below FY 2007
Toro FY 2010 – (11/1/2009-10/31/2010)	75% below FY 2007
Toro FY 2011 – (11/1/2010-10/31/2011)	53% below FY 2007
Toro FY 2012 – (11/1/2011-10/31/2012)	46% below FY 2007
Toro FY 2013 – (11/1/2012-10/31/2013)	35% below FY 2007
Toro FY 2014 – (11/1/2013-10/31/2014)	15% below FY 2007

7. It wasn't until Toro FY 2015 (11/1/2014 -10/31/2015) that Toro's mini skid steer unit volume exceeded Toro FY 2007 unit volume.

8. Toro initiated an engineering project in March of 2013 to develop what became Toro's Dingo TX 1000 vertical lift compact utility loader.

9. I declare that all statements made herein of my own knowledge are true and that all statements made on information and belief are believed to be true; and further that these statements were made with the knowledge that willful, false statements and the like so made are punishable by fine or imprisonment, or both, under Section 1001 of Title 18 of the United States Code and that such willful, false statements may jeopardize the validity and/or enforceability of the application and/or any patent issuing therefrom.

February 24, 2017

Respectfully submitted,

Neil Borenstein

UNITED STATES PATENT AND TRADEMARK OFFICE

UNITED STATES DEPARTMENT OF COMMERCE
United States Patent and Trademark Office
Address: COMMISSIONER FOR PATENTS
P.O. Box 1450
Alexandria, Virginia 22313-1450
www.uspto.gov

Bib Data Sheet

CONFIRMATION NO. 3754

SERIAL NUMBER	FILING OR 371(c) DATE	CLASS	GROUP ART UNIT	ATTORNEY DOCKET NO.
90/013,915	02/28/2017 RULE	414	3993	Vermeer-386Reex

AIA (First Inventor to File): YES

INVENTORS

9321386, Residence Not Provided;
VERMEER MANUFACTURING COMPANY, PELLA, IA;
THE TORO CAMPANY (3RD PTY REQ.), BLOOMINGTON, MN;

APPLICANTS

JAMES W. MILLER, ATTORNEY, MINNEAPOLIS, MN

**** CONTINUING DATA ****************************

This application is a REX of 14/691,649 04/21/2015 PAT 9321386 a
which claims benefit of 62/118,860 02/20/2015

**** FOREIGN APPLICATIONS **********************

		STATE OR COUNTRY	SHEETS DRAWING	TOTAL CLAIMS	INDEPENDENT CLAIMS
Foreign Priority claimed 35 USC 119 (a-d) conditions met Verified and Acknowledged	☐ yes ☐ no ☐ yes ☐ no ☐ Met after Allowance Examiner's Signature Initials			20	2

ADDRESS
76656

TITLE
LOW PROFILE COMPACT TOOL CARRIERS

FILING FEE RECEIVED		
12000	FEES: Authority has been given in Paper No. _____ to charge/credit DEPOSIT ACCOUNT No. _____ for following:	☐ All Fees ☐ 1.16 Fees (Filing) ☐ 1.17 Fees (Processing Ext. of time) ☐ 1.18 Fees (Issue) ☐ Other _____ ☐ Credit