Armstrong Teasdale

Vermeer Argument Slides

IPR2025-00167, IPR2025-00168, IPR2025-00169, IPR2025-00170, IPR2025-00171, IPR2025-00381, PGR2025-00016

March 19, 2026

PRESENTED BY

Richard Brophy

DEMONSTRATIVE EXHIBIT - NOT EVIDENCE

What is a Mainframe?

The Board's preliminary definition for the term "mainframe":

"Primary supporting structure"

- IPR2025-00169, Paper 16 at 20, 26, 35.

DEMONSTRATIVE EXHIBIT - NOT EVIDENCE

What is a Mainframe?

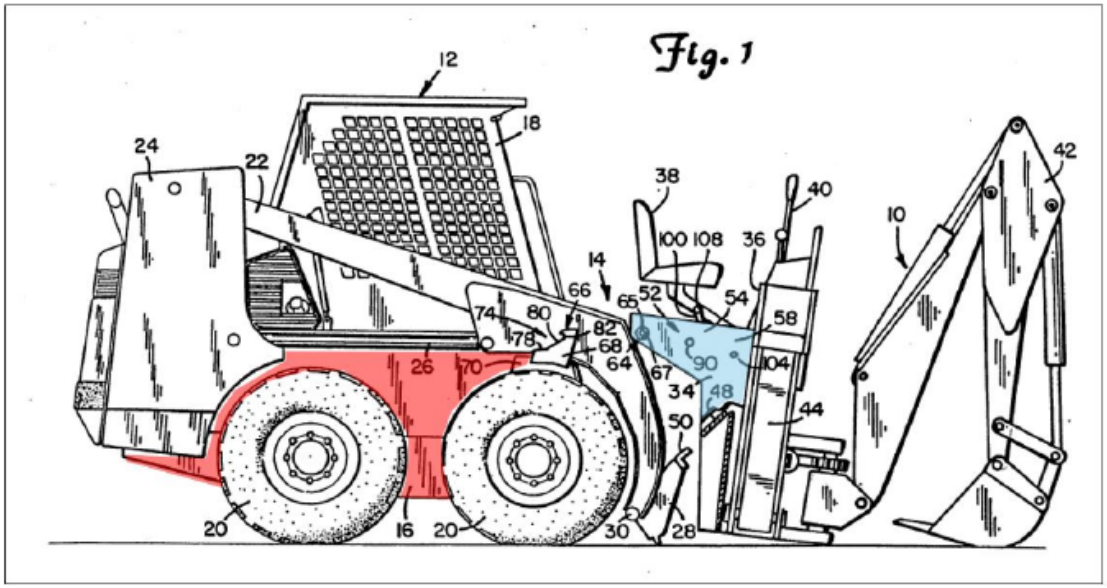

IPR2025-00169, Paper 23 at 29.

A pair of spaced actuating arms or lift arms **22** are pivotally mounted at their first ends to upright supports **24**. Hydraulic lift cylinders **26** (only one being visible in FIG. **1**) raise and lower the lift arms **22** with respect to the main frame **16** in a known manner. A mounting

- IPR2025-00169, Ex. 2017 at 3:21-26.

As seen in FIGS. and **2**, the backhoe attachment **10** includes a carrier frame **34** and an operator's compartment **36**. The operator's compartment **36** includes an

- IPR2025-00169, Ex. 2017 at 3:32-34.

DEMONSTRATIVE EXHIBIT - NOT EVIDENCE

What is a Mainframe?

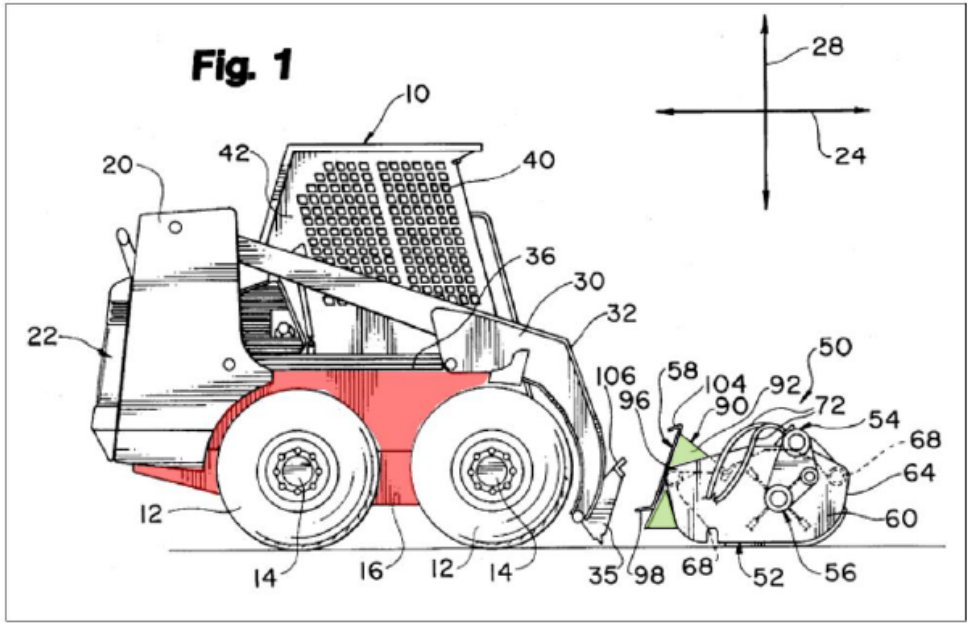

IPR2025-00169, Paper 23 at 30 (annotated).

The lift arm assembly **30** is mounted to upright members **20** which are located at the rear of the main frame assembly **16**. Alternative designs of skid steer vehicles **10** do not have

- IPR2025-00169, Ex. 2018 at 3:46-48.

The flail mower **50** has four major components: case **52**, drive unit **54**, flail unit **56**, and quick attachment receiver **58**.

The case **52** of the flail mower **50** has two opposed side panels **60**, a top panel **62**, a front panel **64**, and a rear panel **66** and a rear subpanel **65** extending between top panel **62** and rear panel **66**. Rear subpanel **65** includes a plurality of

- IPR2025-00169, Ex. 2018 at 4:45-50.

DEMONSTRATIVE EXHIBIT - NOT EVIDENCE

KR996 Reference

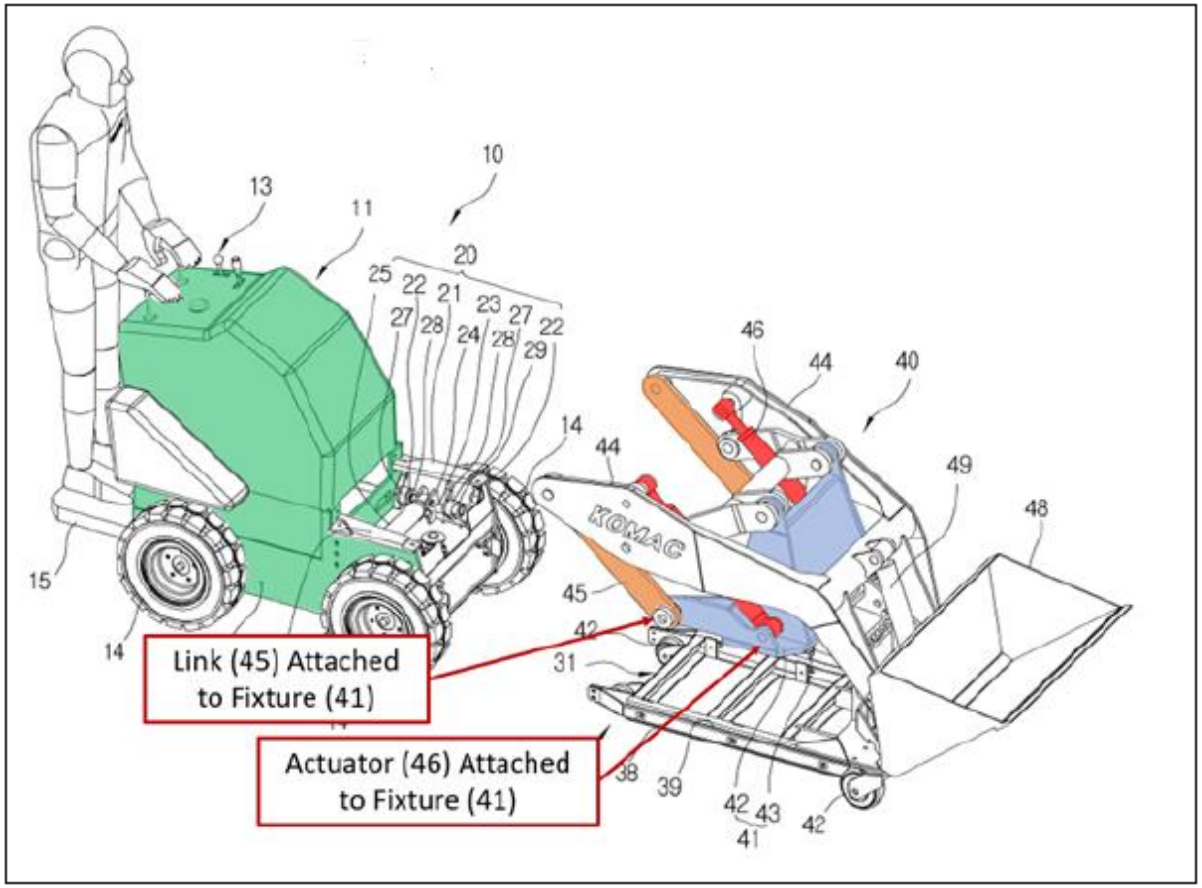

- IPR2025-00169, Paper 23 at 42 (citing Ex. 2016, ¶165).

DEMONSTRATIVE EXHIBIT - NOT EVIDENCE

KR996 Reference

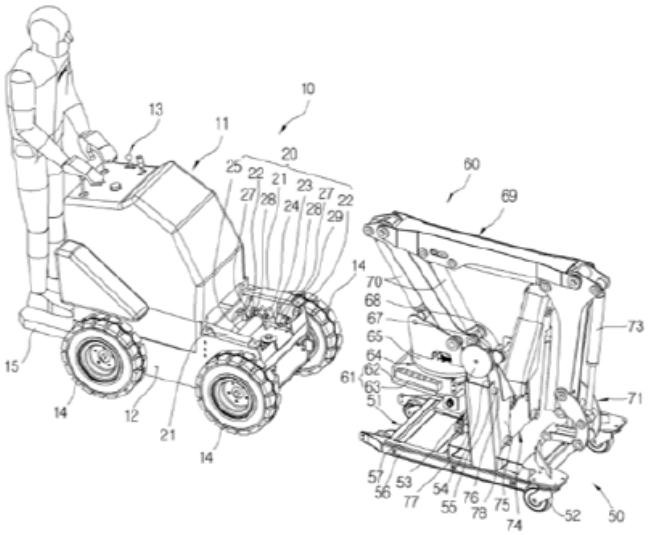

Detachable arm unit (60) with breaker

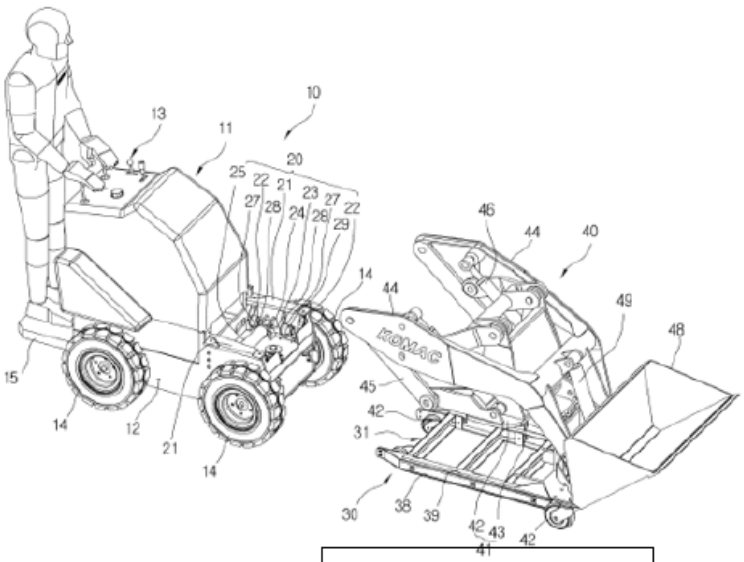

Detachable loader unit (40) with bucket

- IPR2025-00169, Paper 23 at 59 (citing Ex. 2016, ¶¶ 134-141).

DEMONSTRATIVE EXHIBIT - NOT EVIDENCE

KR996 Reference

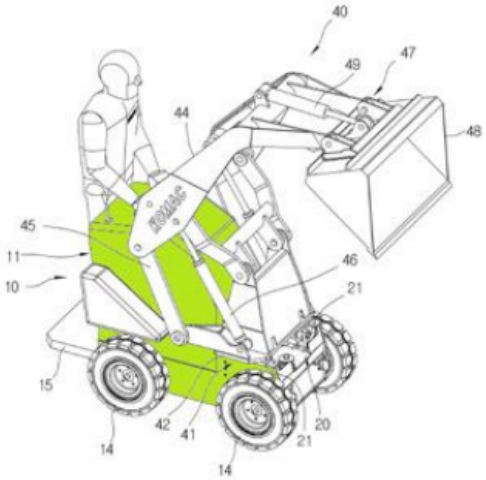

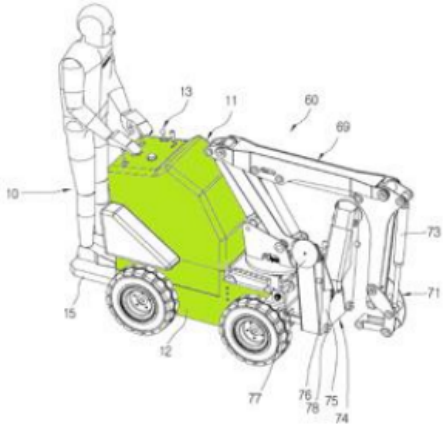

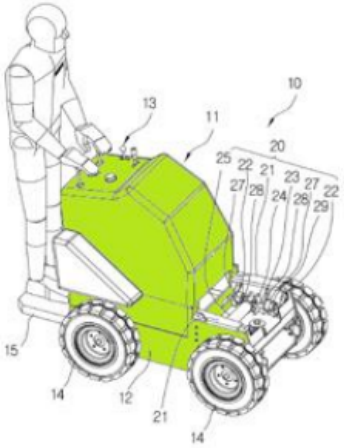

- IPR2025-00169, Paper 23 at 43 (citing Ex. 2016, ¶171).

DEMONSTRATIVE EXHIBIT - NOT EVIDENCE

KR996 Reference

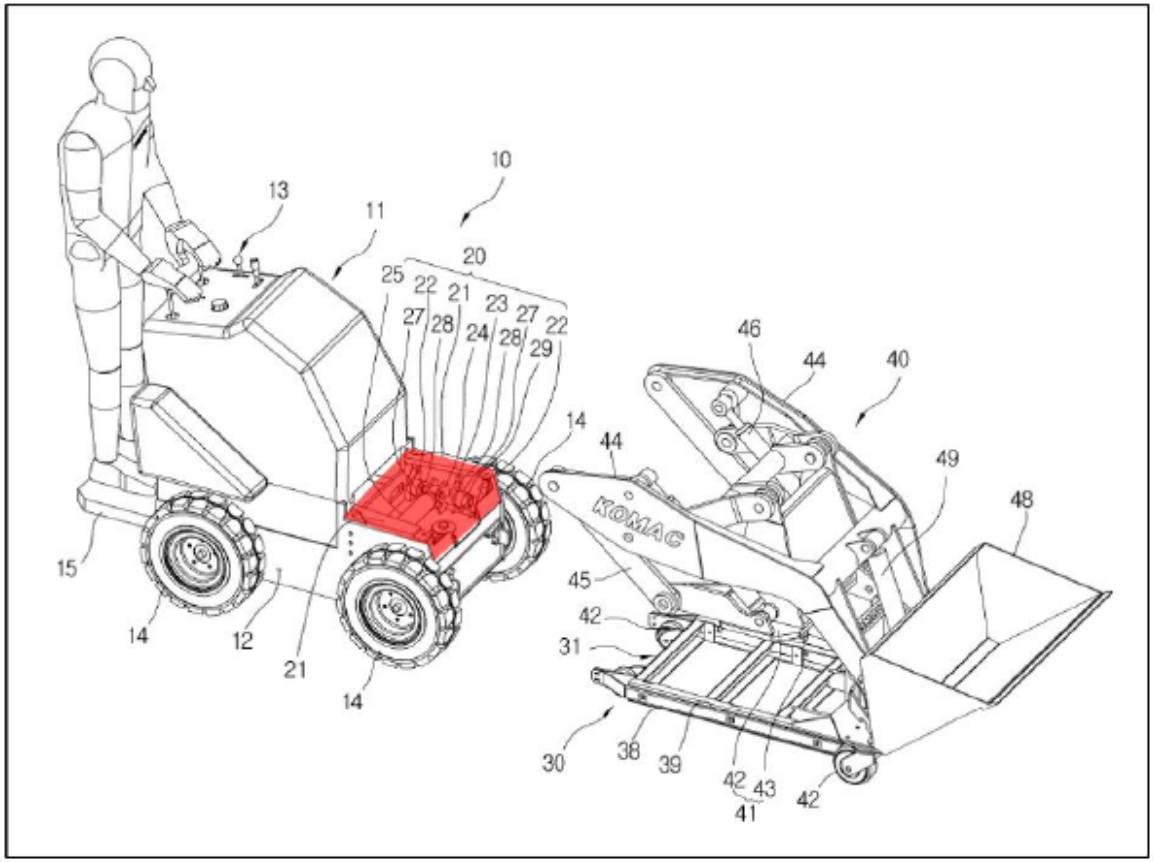

- IPR2025-00169, Paper 23 at 19.

DEMONSTRATIVE EXHIBIT - NOT EVIDENCE

KR996 Reference

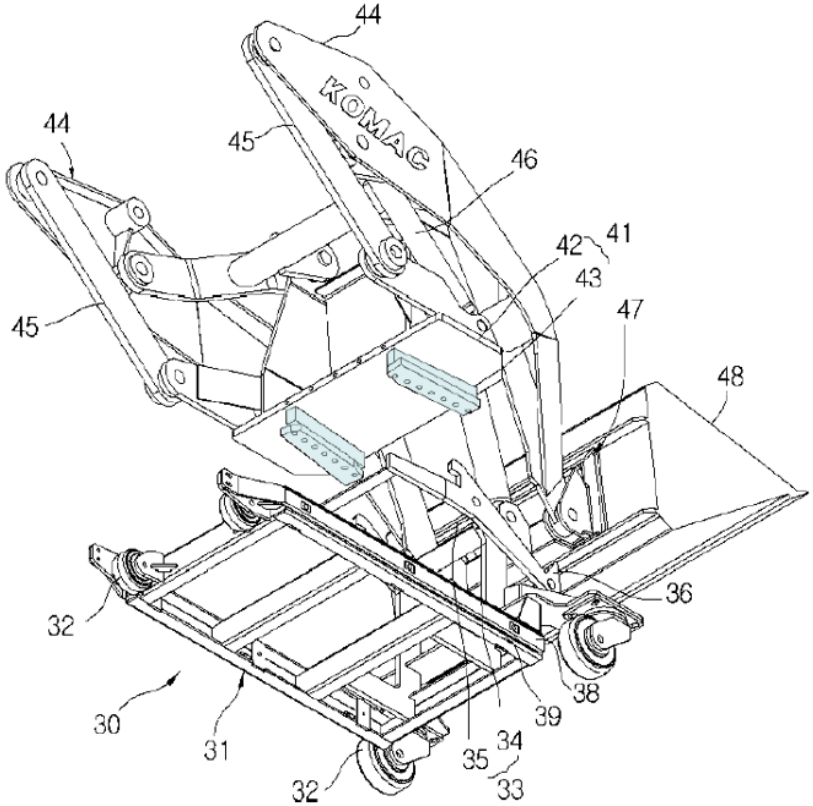

- IPR2025-00169, Ex. 1005 at Fig. 3 (annotated).

DEMONSTRATIVE EXHIBIT - NOT EVIDENCE

KR996 Reference

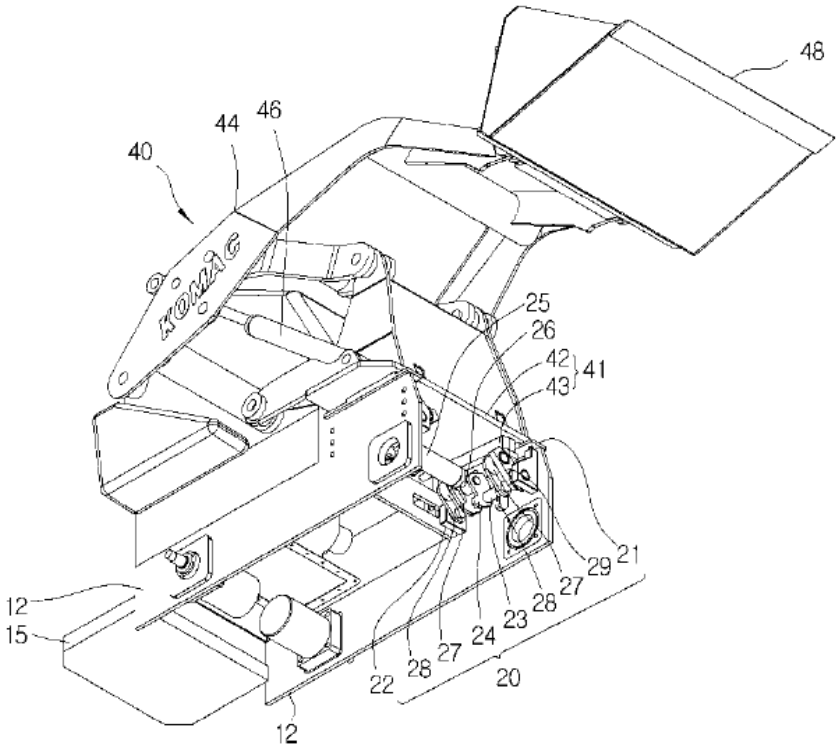

- IPR2025-00169, Ex. 1005 at Fig. 10.

DEMONSTRATIVE EXHIBIT - NOT EVIDENCE

KR996 Reference

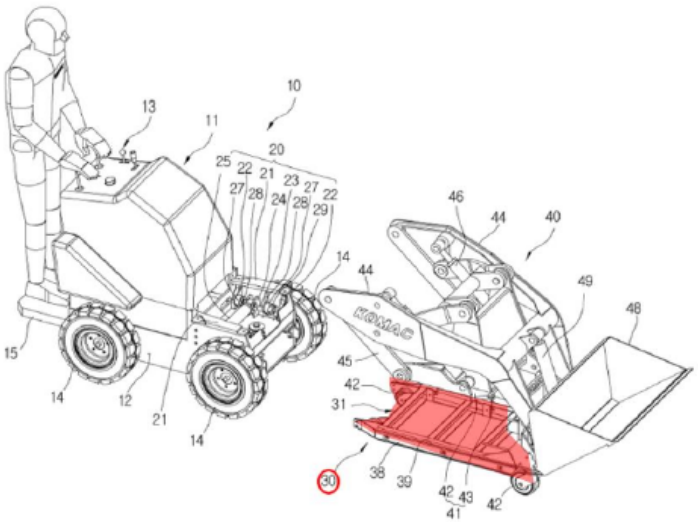

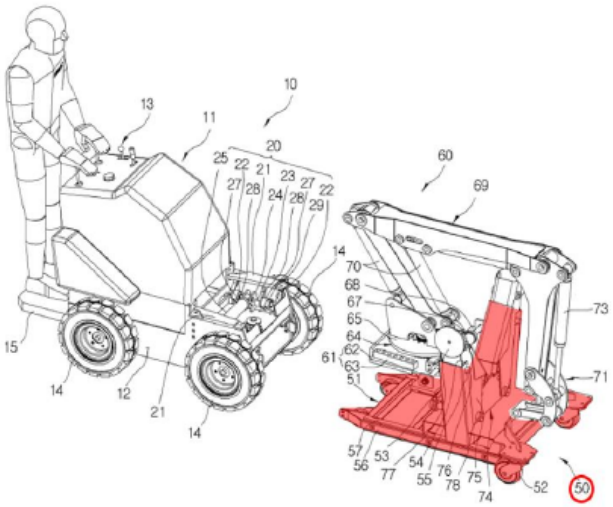

- IPR2025-00169, Paper 23 at 20.

DEMONSTRATIVE EXHIBIT - NOT EVIDENCE

KR996 Reference

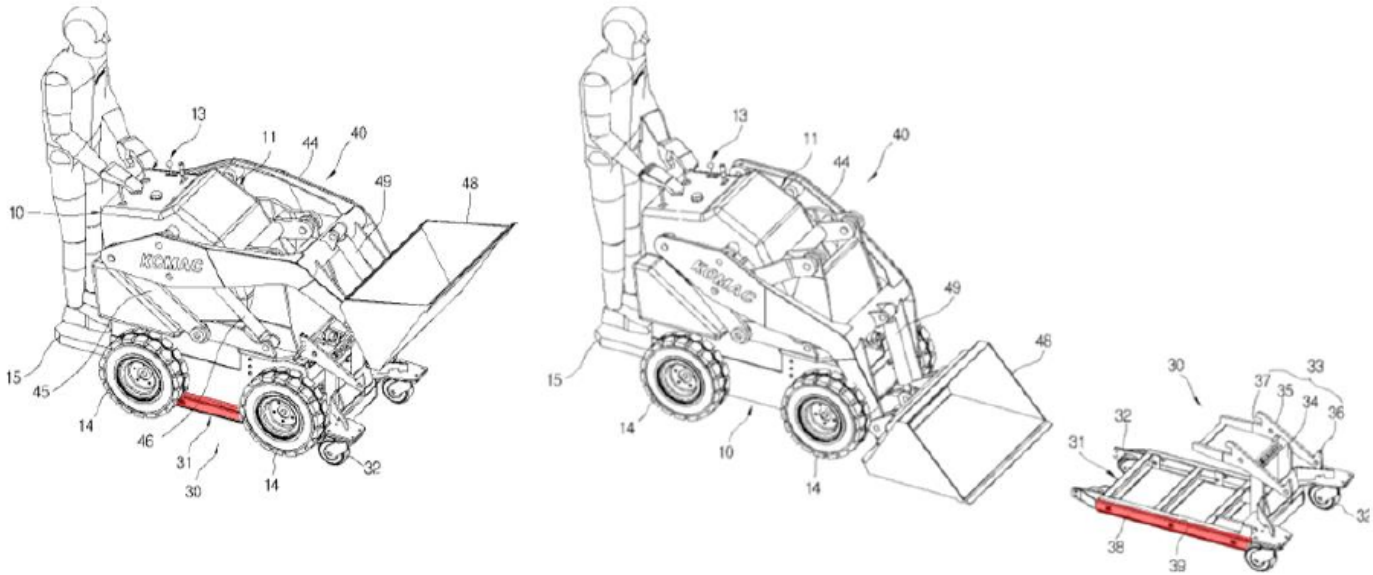

- IPR2025-00169, Paper 23 at 21.

DEMONSTRATIVE EXHIBIT - NOT EVIDENCE

KR996 Reference

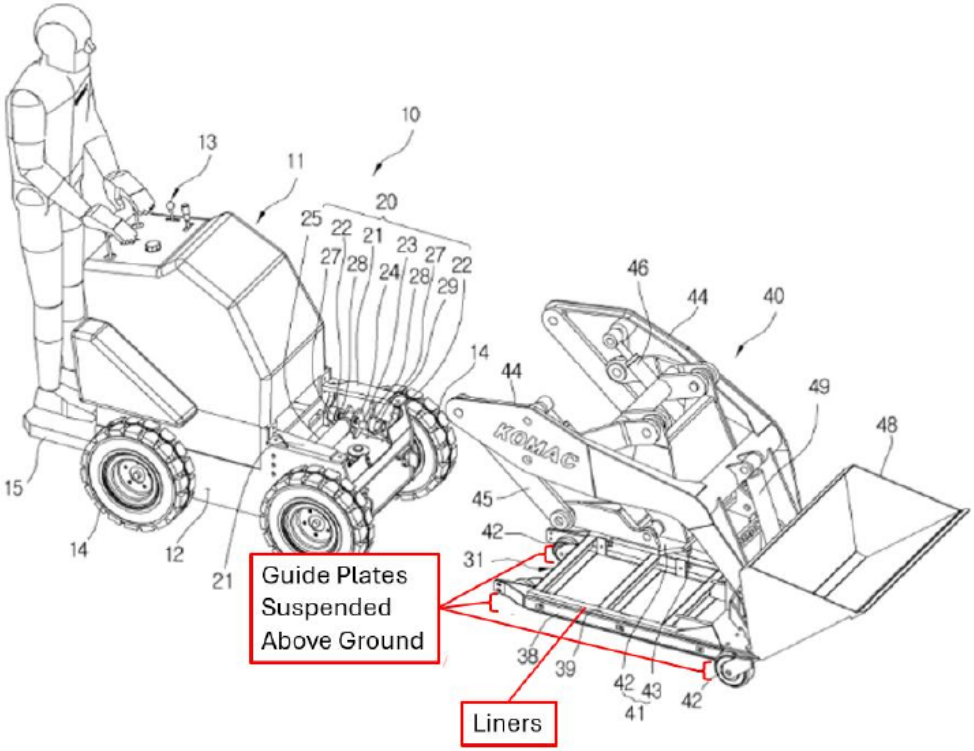

- IPR2025-00169, Paper 23 at 48 (citing Ex. 2016, ¶106).

DEMONSTRATIVE EXHIBIT - NOT EVIDENCE

KR996 Reference

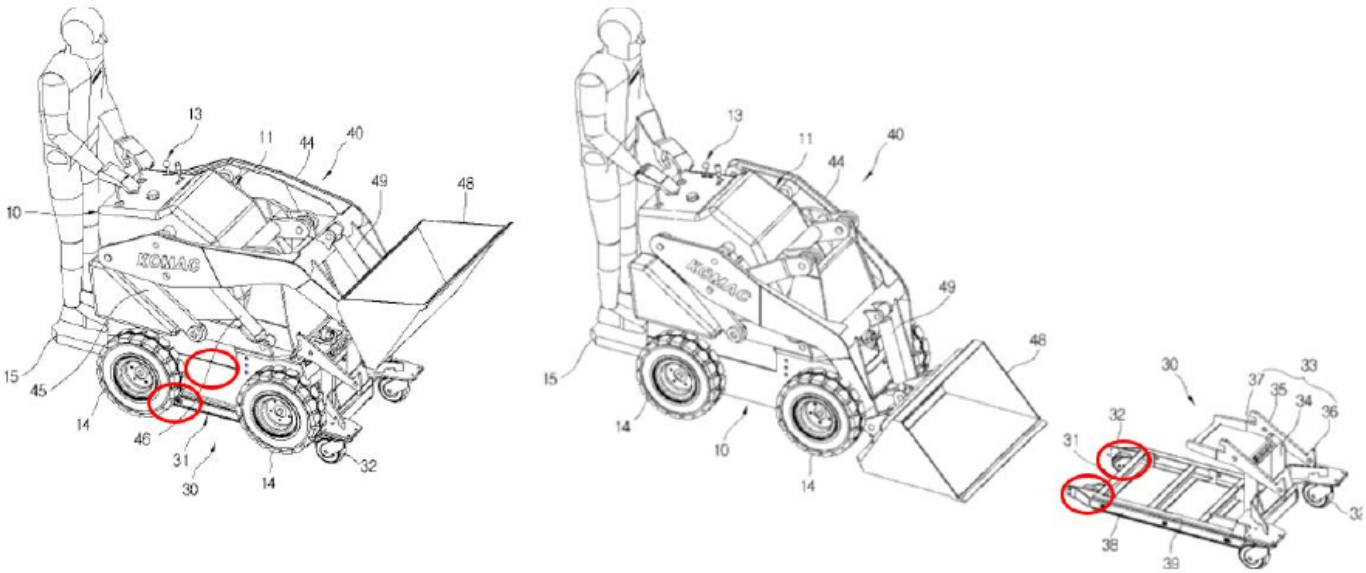

- IPR2025-00169, Paper 23 at 50.

DEMONSTRATIVE EXHIBIT - NOT EVIDENCE

JP705 Reference

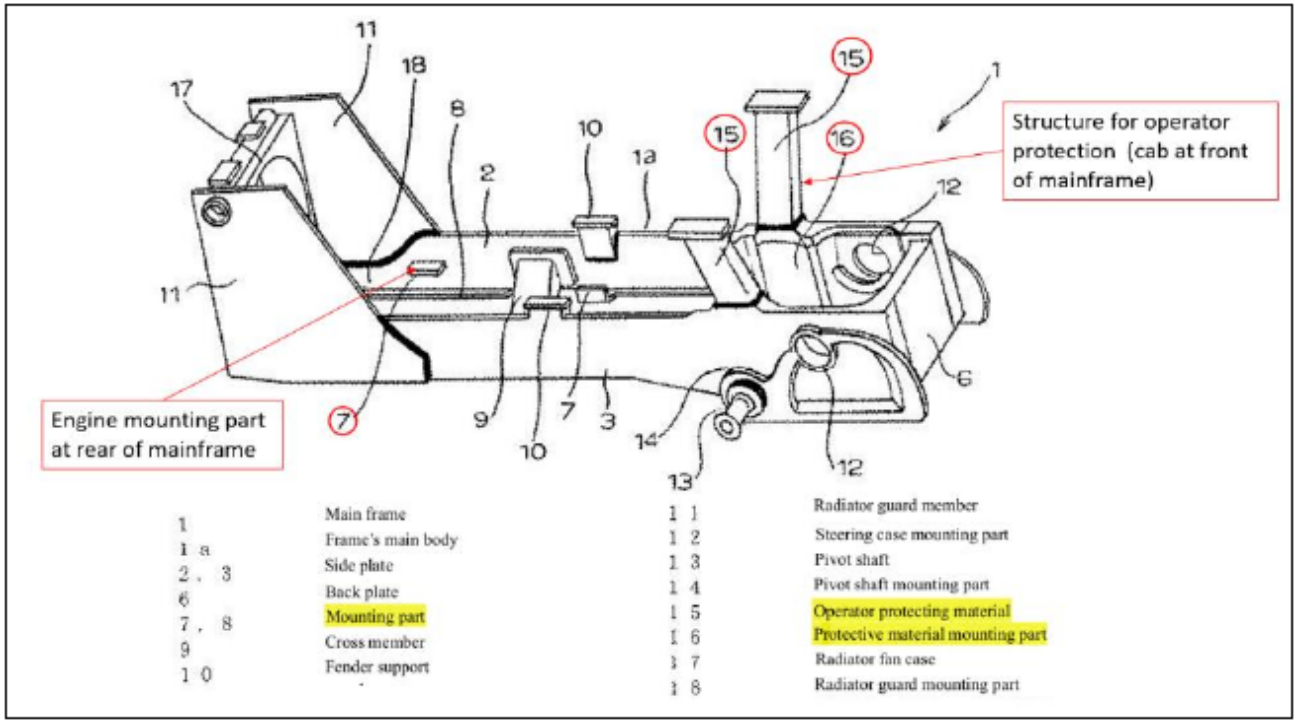

- IPR2025-00169, Paper 23 at 40 (citing Ex. 2016, ¶97).

DEMONSTRATIVE EXHIBIT - NOT EVIDENCE

JP705 Reference

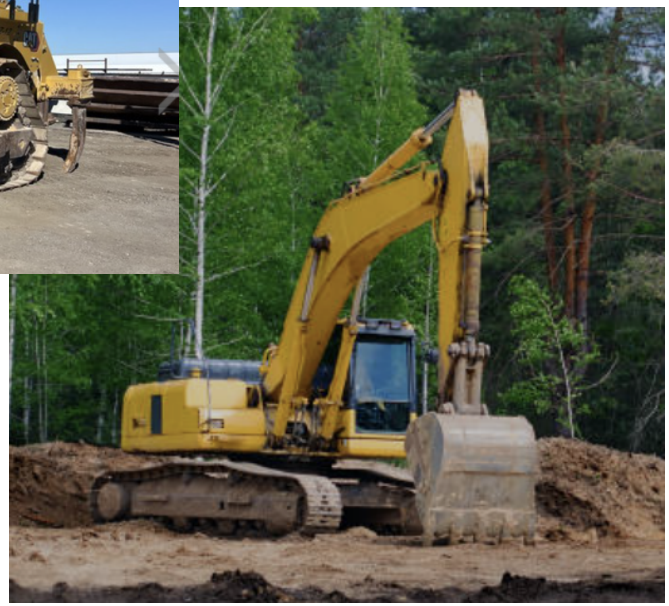

Discussed at IPR2025-00169, Paper 23 at 39.

DEMONSTRATIVE EXHIBIT - NOT EVIDENCE

Bares Reference

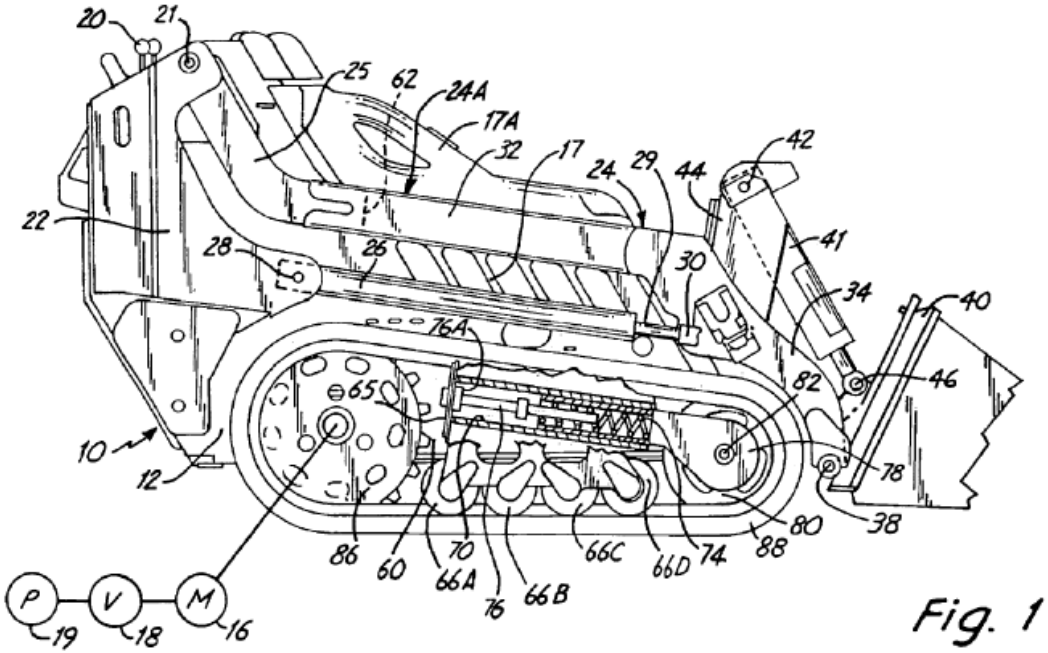

Fig. 1

- IPR2025-00169, Ex. 1010.

DEMONSTRATIVE EXHIBIT - NOT EVIDENCE

Bares Reference

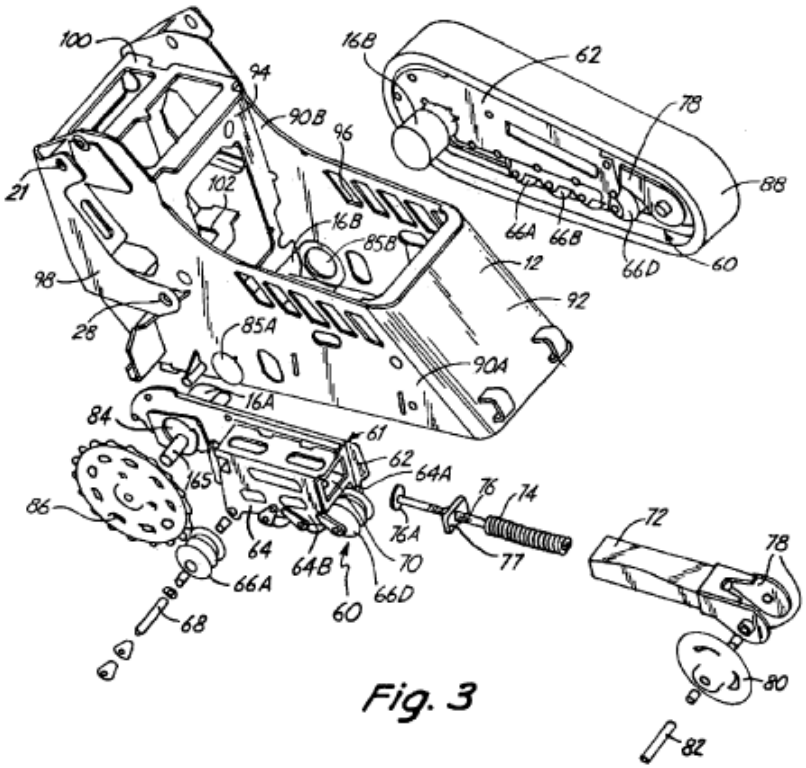

Fig. 3

- IPR2025-00169, Ex. 1010.

DEMONSTRATIVE EXHIBIT - NOT EVIDENCE

Beltrami Reference

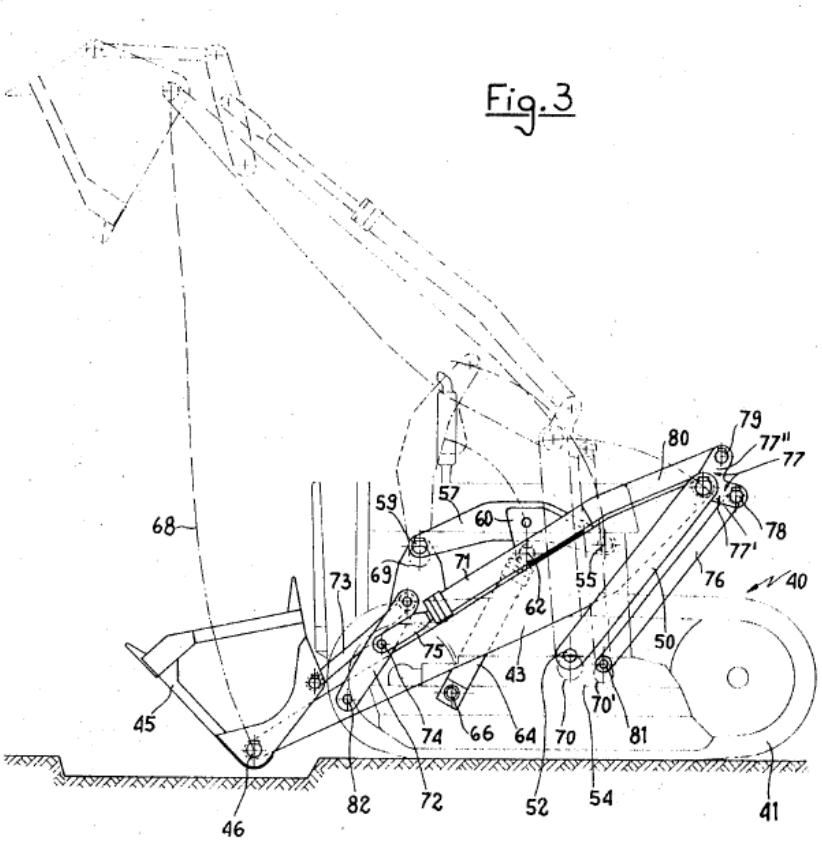

- IPR2025-00169, Ex. 1008.

DEMONSTRATIVE EXHIBIT - NOT EVIDENCE

Beltrami Reference

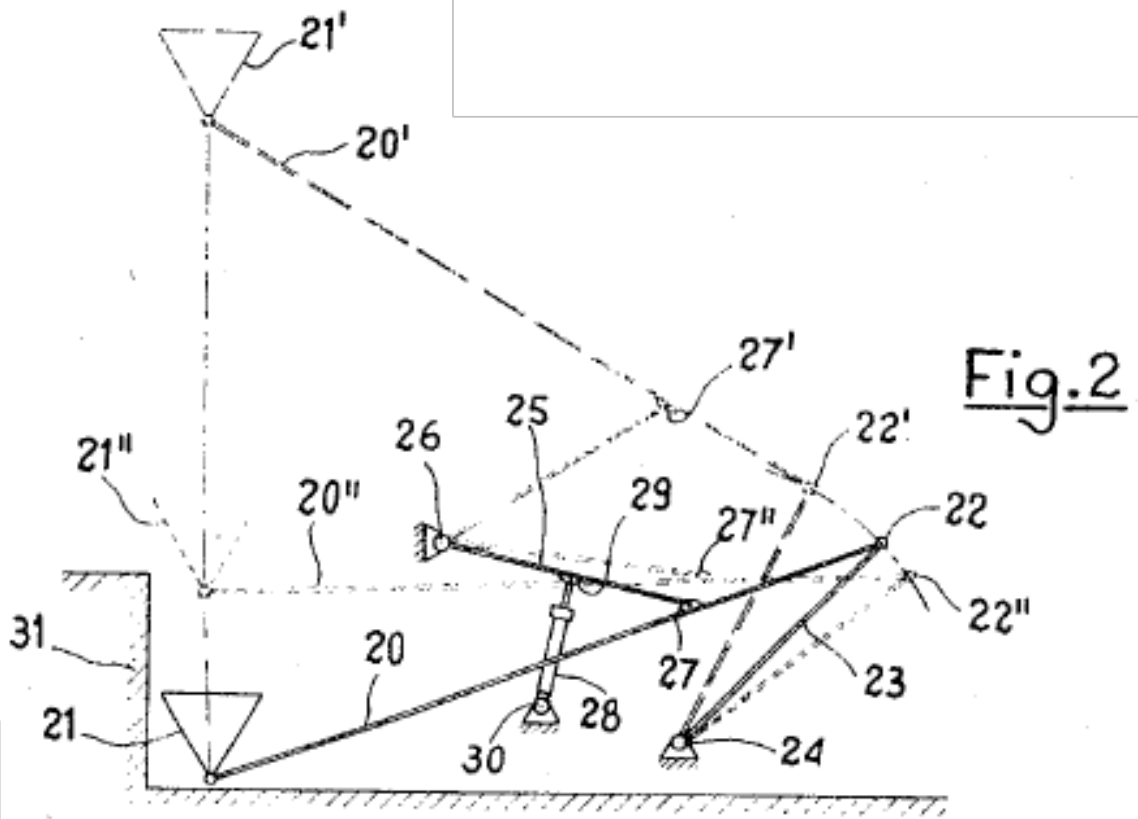

- IPR2025-00169, Ex. 1008.

DEMONSTRATIVE EXHIBIT - NOT EVIDENCE

Beltrami Reference

PRIOR ART Fig. 1

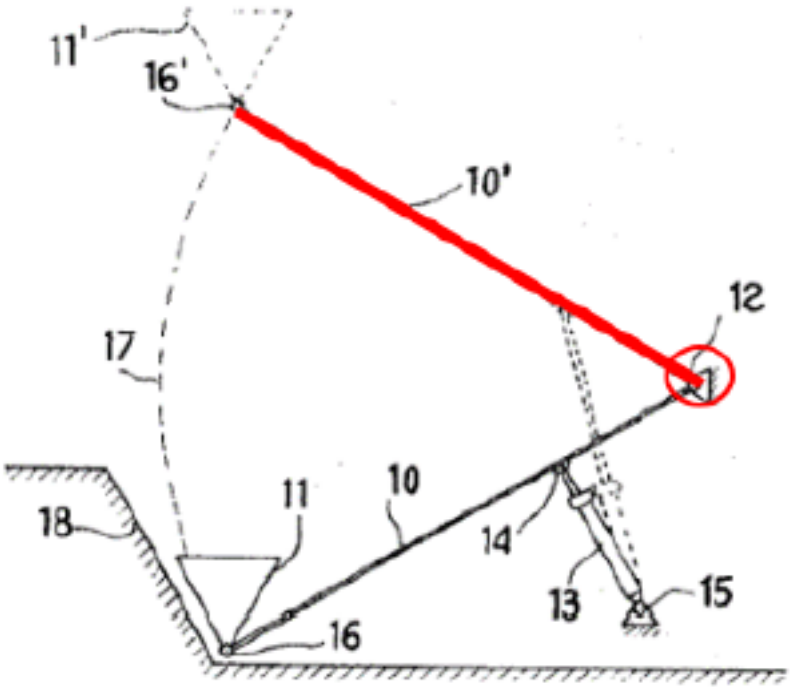

- IPR2025-00169, Paper 23 at 56.

DEMONSTRATIVE EXHIBIT - NOT EVIDENCE

Beltrami Reference

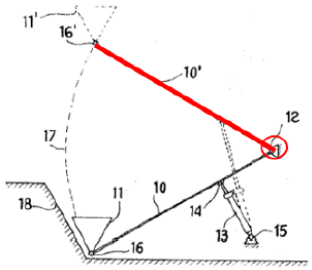

- IPR2025-00169, Paper 23 at 56.

Referring now to FIG. 1, it diagrammatically shows drive means for an arm **10** by which a grabbing bucket **11** is lifted. Such arm **10** is connected to a pivot point **12**, firmly secured to the tracked vehicle body and is operated by a jack **13** which on turn is pivotally connected at **14** to the arm **10** and at **15** to the tracked vehicle body, in such a manner that any point of the bucket **11**, e.g. the pivot point **16**, is compelled to travel along a path **17**, consisting of an arc of circle. Such curved path necessarily results in the formation of a soil escarpment **18** which is inclined with respect to the vertical plane. Said escarpment shape is not presently accepted, since vertical or nearly vertical escarpments are preferred, being such escarpments retained by the successive application of soil supporting means. Moreover, the bucket **11**, when in its fully lifted position **11'**, is usually too close to vehicle body and thus a dump of material onto the middle section of a truck or similar transport means is not possible. It would be possible to prevent such drawback by providing a sufficiently long arm **10**, which however is more expensive, more difficult to control and in addition requires also greater continuous power ratings of lifting means; consequently, the general trend is directed toward a decrease of arm length. Due to such restrictions, imposed

- IPR2025-00169, Ex. 1008 at 2:41-63.

DEMONSTRATIVE EXHIBIT - NOT EVIDENCE

Beltrami Reference

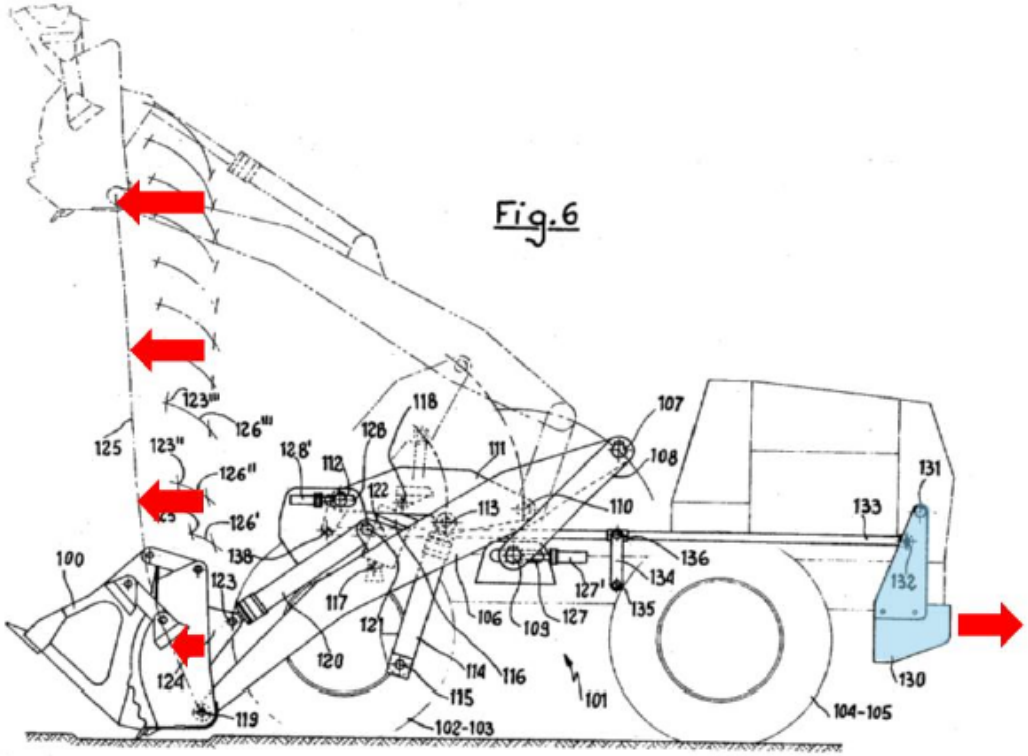

- IPR2025-00169, Paper 23 at 58 (citing Ex. 2016, ¶127).

DEMONSTRATIVE EXHIBIT - NOT EVIDENCE

Beltrami Reference

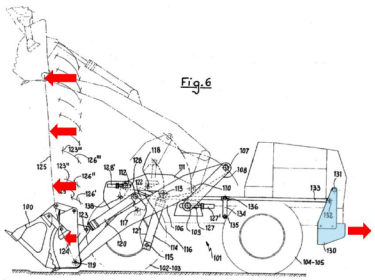

- IPR2025-00169, Paper 23 at 58 (citing Ex. 2016, ¶127).

In the presently considered case, wherein a bucket path rather different from the vertical one is required, proportional shiftings of the equipment gravity center will obviously occur while the load is being lifted. To prevent the ill effects which would be caused by such shiftings of the gravity center in respect of vertical plane wherein it originally lies, means are provided which are suitably shifted while the bucket is being lifted, thereby maintaining said gravity center within an acceptable range about its initial position. Such means may consist of movable ballast **130**, as shown in FIG. **6**, pivotally connected at **131** with the tractor frame in a position opposite to that of bucket in respect of the equipment gravity center. Said movable ballast is pivotally connected at **132** with a controlling rod **133** adapted to shift outwardly or inwardly the ballast according to bucket motions, thereby displacing the ballast gravity center and hence the equipment gravity center in such a manner as to substantially equalize the bending moments, as caused by the ballast and by the bucket in respect of a fixed point on the tractor body. Said rod **133** which is guided in its intermediate position by the connecting rod **134** pivoted at **135** and **136** is advantageously controlled by the motions of connecting rod **111**, through the lever **137** which has one end secured thereto and the opposite end pivotally connected at **138** to said control rod **133**. In such a manner, a displacement of ballast **130** is obtained, which corresponds to the angular motion of lever **111** and thus to bucket liftings and substantially to the outward shiftings thereof.

- IPR2025-00169, Ex. 1008 at 5:73-6:25.

DEMONSTRATIVE EXHIBIT - NOT EVIDENCE

Kubota's Proposed Combinations
KR996 + Bares

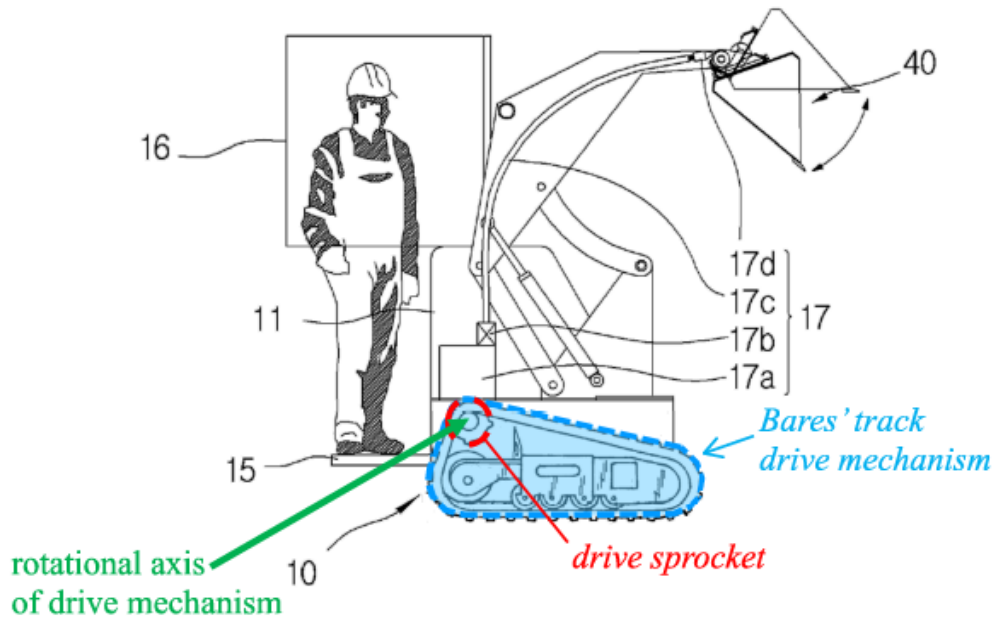

FIGURE A
KR996's Fig. 21 (annotated)
and modified with Bares' FIG. 8 track assembly

- IPR2025-00169, Paper 3 at 63.

DEMONSTRATIVE EXHIBIT - NOT EVIDENCE

Kubota's Proposed Combinations
KR996 + JP705 + Bares

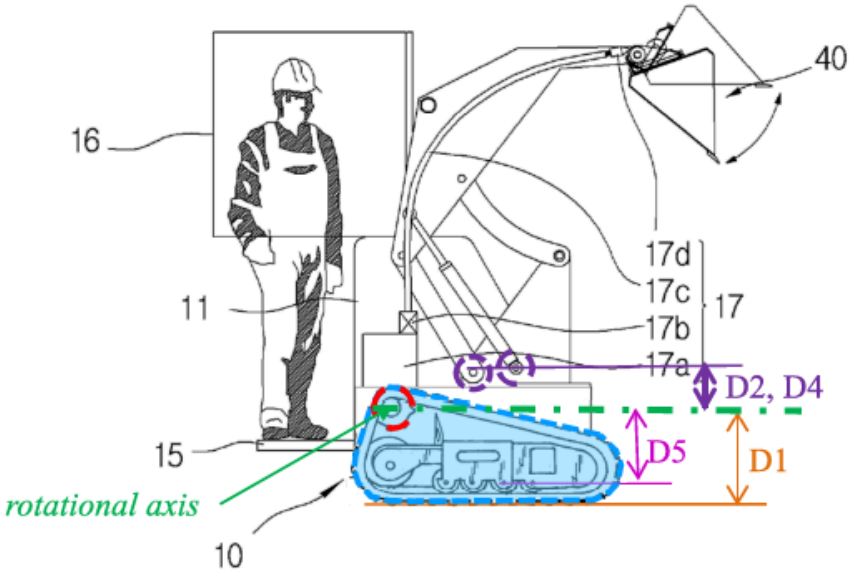

FIGURE A
KR996's Fig. 21 (annotated)
and modified with Bares' FIG. 8 track assembly

- IPR2025-00169, Paper 3 at 68.

DEMONSTRATIVE EXHIBIT - NOT EVIDENCE

Kubota's Proposed Combinations
KR996 + JP705 + Bares

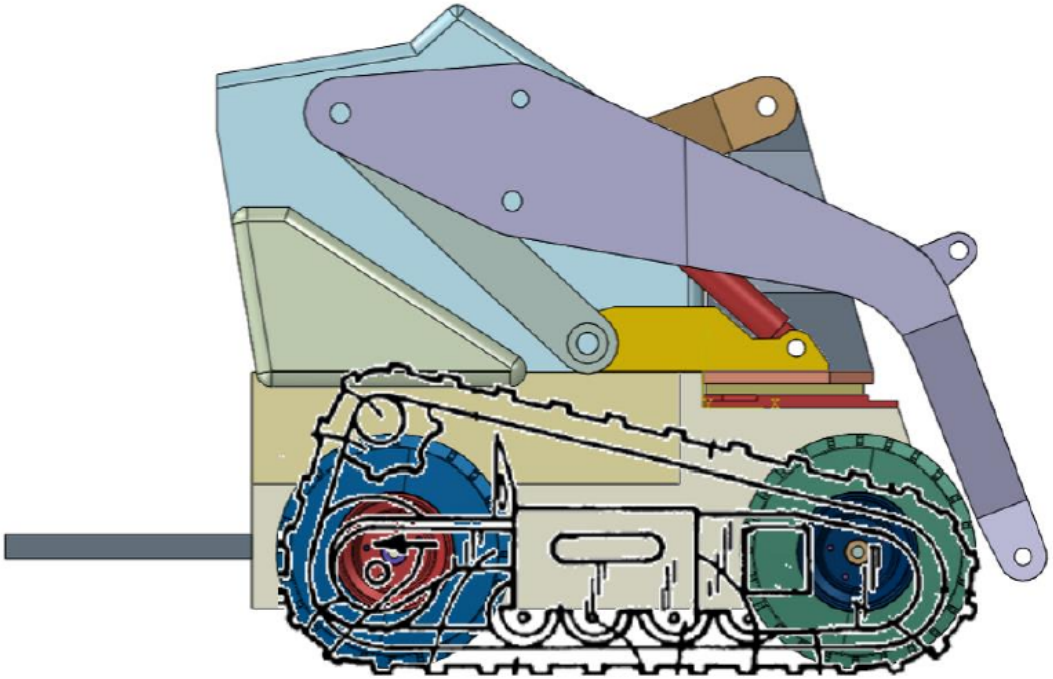

- IPR2025-00169, Paper 23 at 52 (citing Ex. 2016, ¶117).

DEMONSTRATIVE EXHIBIT - NOT EVIDENCE

Kubota's Proposed Combinations
KR996 + JP705 + Bares

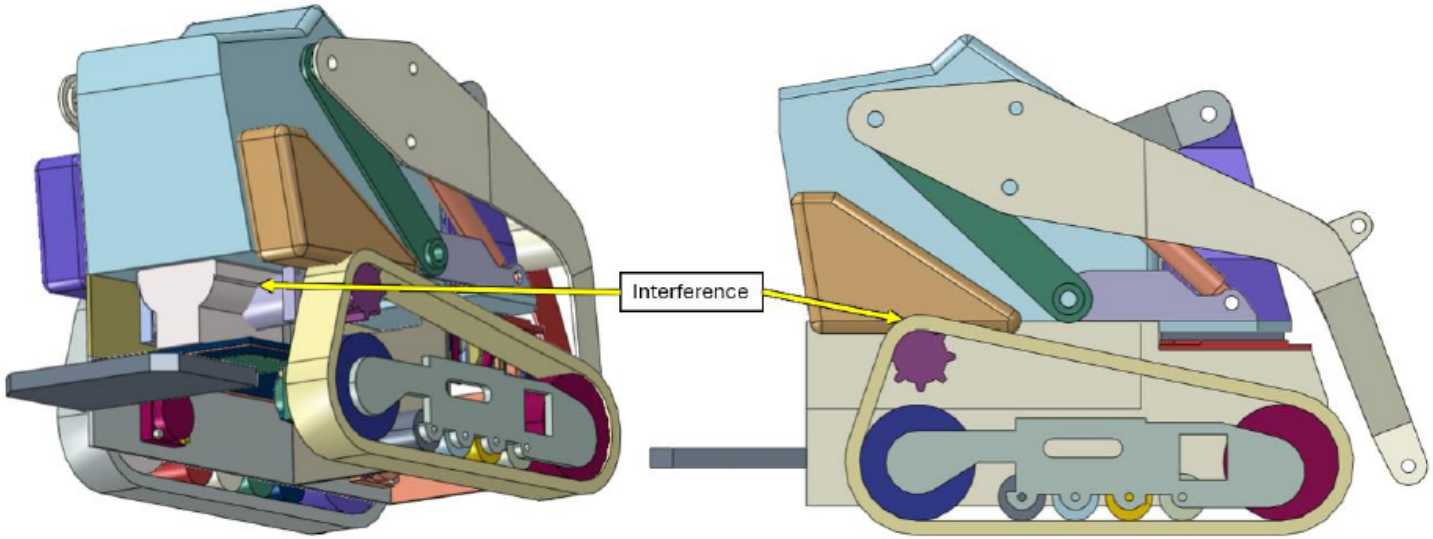

- IPR2025-00169, Paper 23 at 53 (citing Ex. 2016, ¶118).

DEMONSTRATIVE EXHIBIT - NOT EVIDENCE

Kubota's Proposed Combinations
KR996 + JP705 + Bares + Beltrami

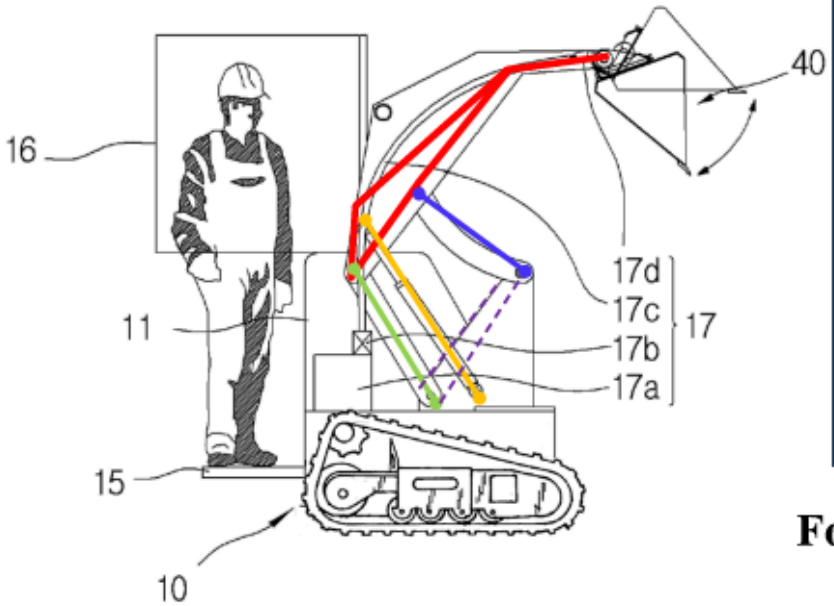

Figure A (annotated)

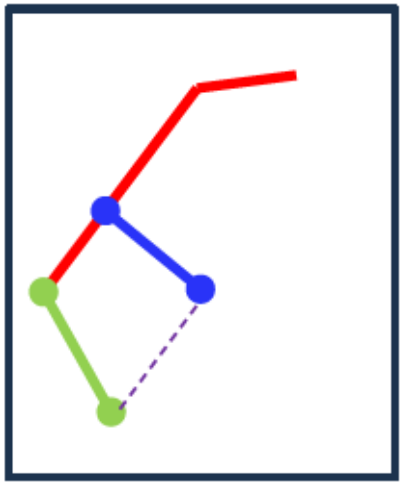

Four-bar mechanism

- IPR2025-00169, Paper 3 at 76.

DEMONSTRATIVE EXHIBIT - NOT EVIDENCE

Kubota's Proposed Combinations
KR996 + JP705 + Bares + Beltrami

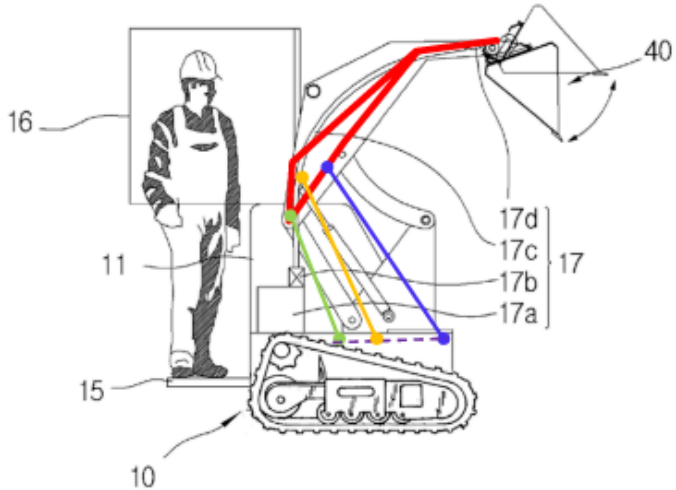

Figure A
(annotated)
with lowered pivot points in light of Beltrami

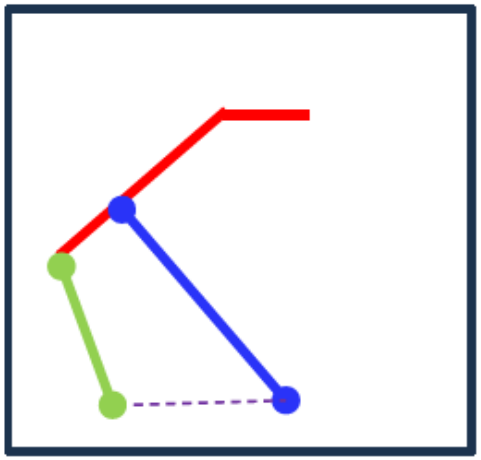

Four-bar mechanism

- IPR2025-00169, Paper 3 at 76.

DEMONSTRATIVE EXHIBIT - NOT EVIDENCE

Kubota's Proposed Combinations
KR996 + JP705 + Bares + Beltrami

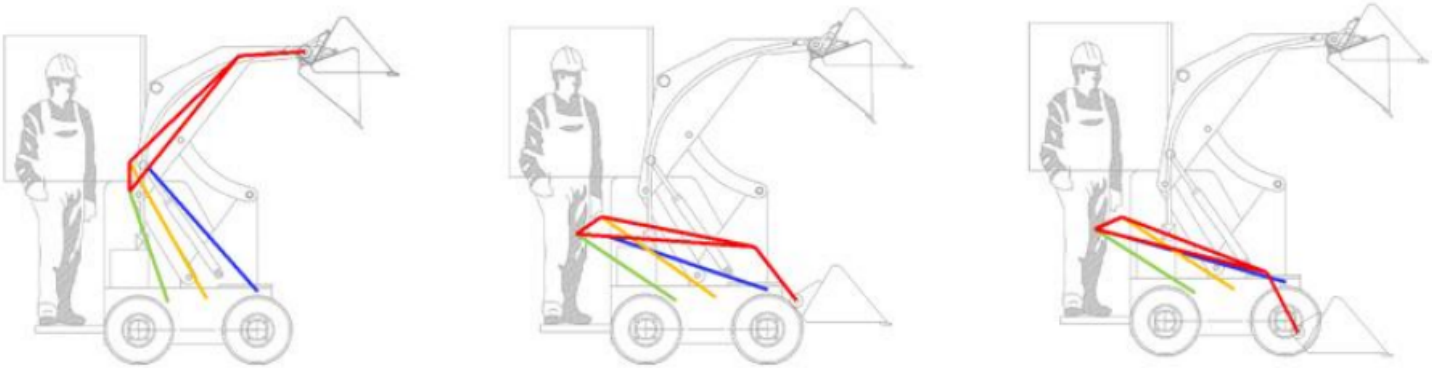

- IPR2025-00169, Paper 23 at 62-63 (citing Ex. 2016, ¶154).

DEMONSTRATIVE EXHIBIT - NOT EVIDENCE

Kubota's Proposed Combinations
KR996 + JP705 + Bares + Beltrami

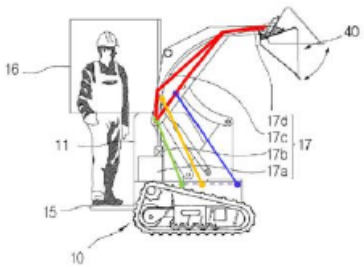

Figure A
(annotated)
with lowered pivot points

Velinsky modified track vehicle with lowered pivot points

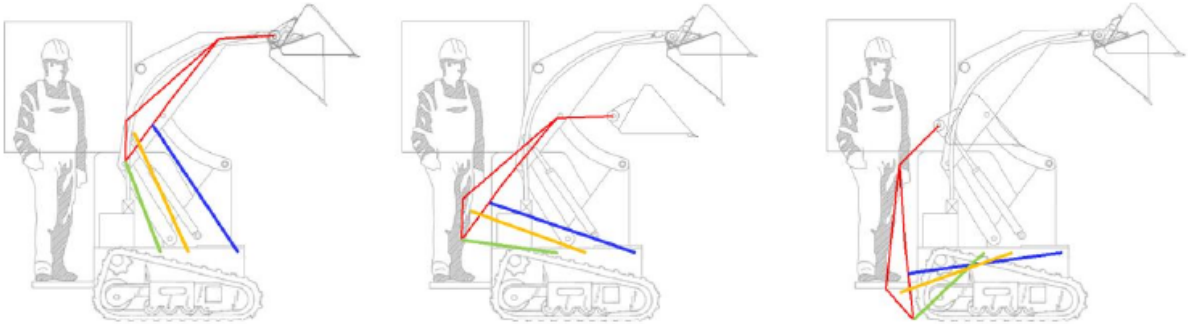

- IPR2025-00169, Paper 23 at 63-64 (citing Ex. 2016, ¶154).

DEMONSTRATIVE EXHIBIT - NOT EVIDENCE

Kubota's Proposed Combinations
KR996 + JP705 + Bares + Beltrami

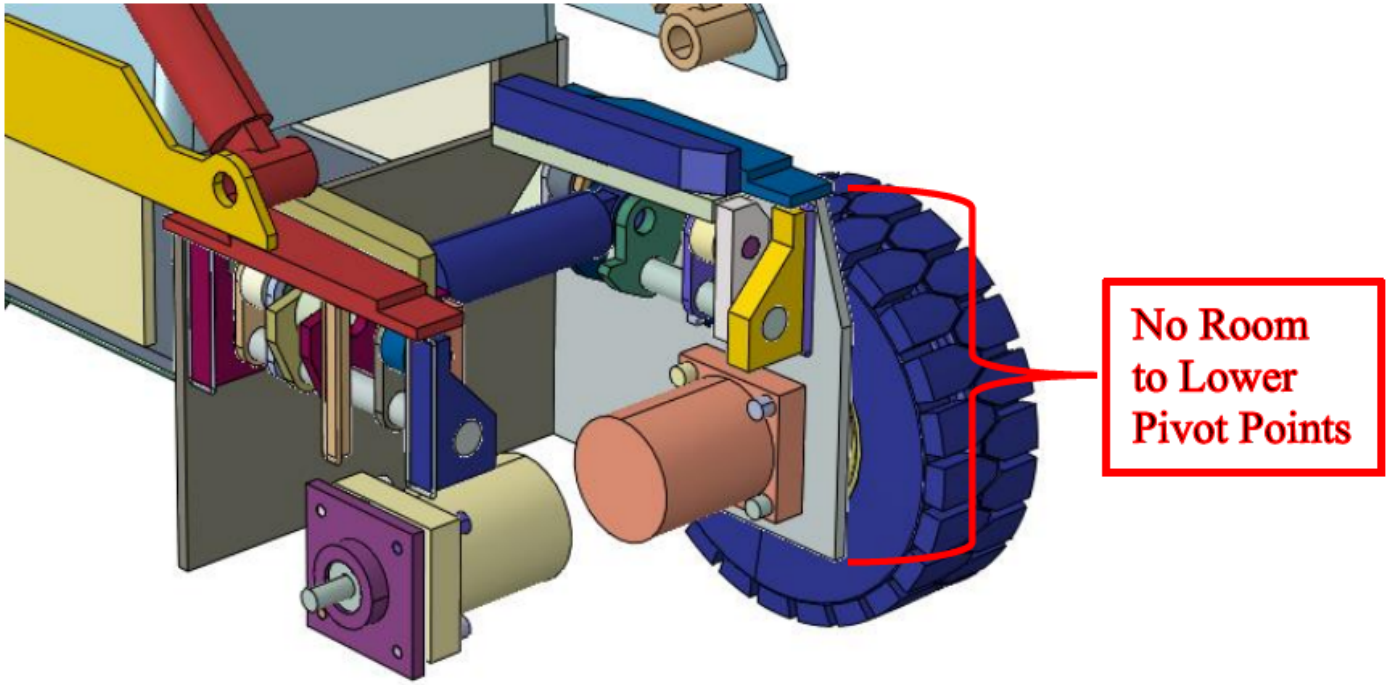

- IPR2025-00169, Paper 23 at 60 (citing Ex. 2016, ¶144-146).

DEMONSTRATIVE EXHIBIT - NOT EVIDENCE

Kubota's Proposed Combinations
KR996 + JP705 + Bares + Beltrami

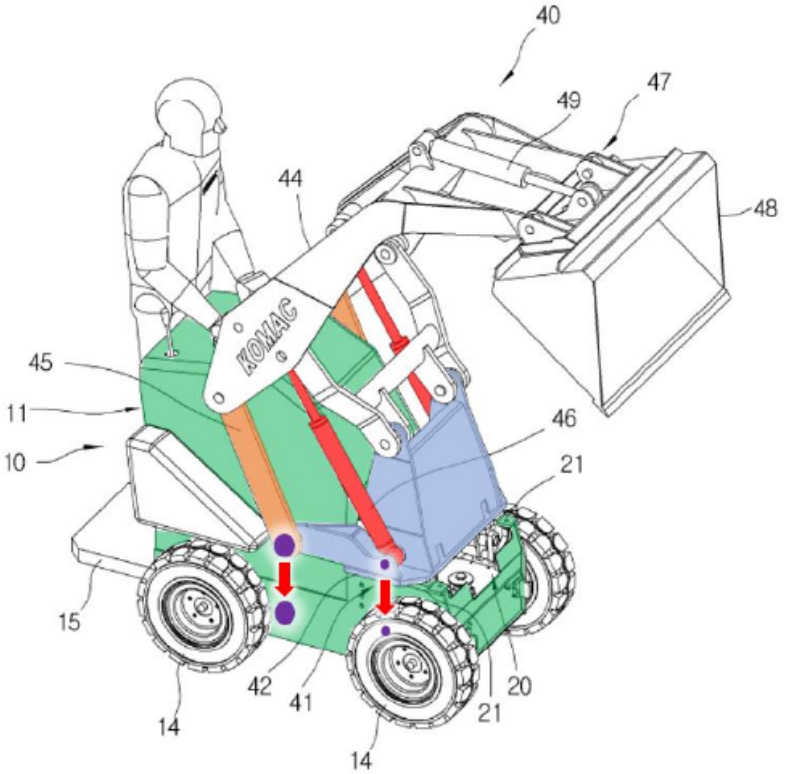

- IPR2025-00169, Paper 23 at 61.

DEMONSTRATIVE EXHIBIT - NOT EVIDENCE

Problems with Velinsky's Experience and Analysis

Compact tool carriers are tool-mounted machines that are capable of working in tight spaces for utility or do-it-yourself home projects. Compact tool carriers are walk-behind units or include a platform on which the operator may stand during use. Compact tool carriers are generally defined (e.g., ISO 6165 (2012) and SAE J2752) as "a self-propelled crawler or wheeled machine having an operating mass of less than 1500 kg with a rigid frame, having either a pedestrian operating position or a standing operator platform at the rear of the machine and either front-mounted interchangeable equipment or lift arms with an attachment bracket capable of coupling to interchangeable, front-mounted attachments." The tool carriers may be attached to a variety of interchangeable tools such as buckets, augers, forks, stump grinders, tillers, rollers and the like.

- IPR2025-00169, Ex. 1001 ('386 Patent) at 1:17-31.

DEMONSTRATIVE EXHIBIT - NOT EVIDENCE

Problems with Velinsky's Experience and Analysis

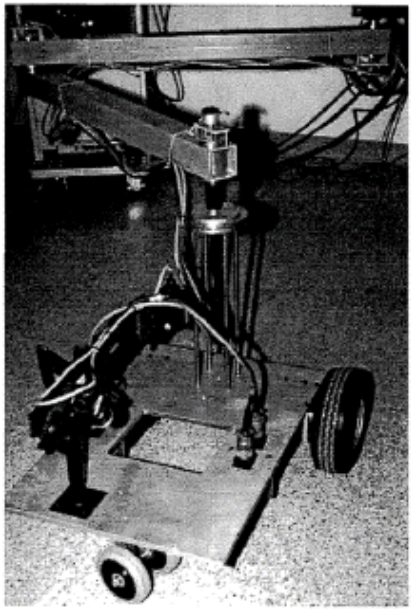

Figure 3-4. TMR Photograph

- IPR2025-00169, Ex. 2040 at 19.

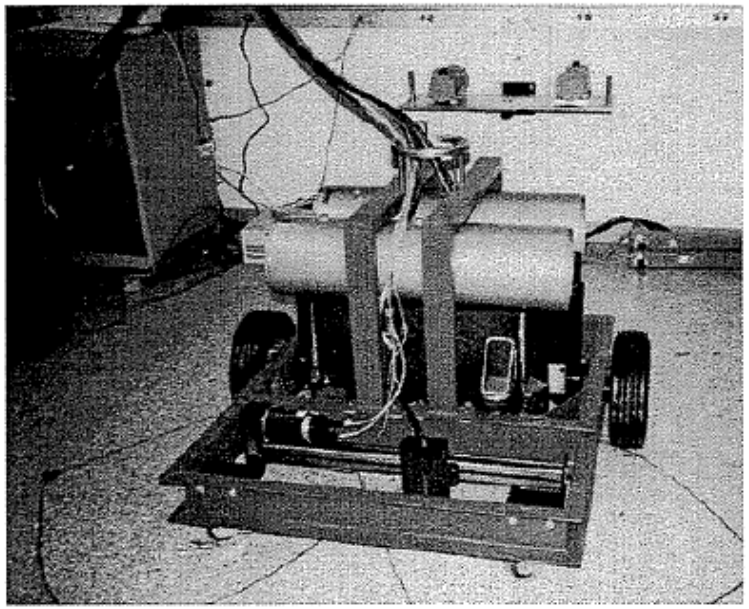

Figure 2-2. Front view of Tethered Mobile Routing Robot

- IPR2025-00169, Ex. 2041 at 11.

DEMONSTRATIVE EXHIBIT - NOT EVIDENCE

Problems with Velinsky's Experience and Analysis

Q. Do you know where any machine that was on the market in 2015 places its hydraulic pump relative to the engine?

A. Any of -- any machine, period?

Q. Any mini skid steer machine.

A. Just from the prior art, looking at the patents, generally knowing where the placement was.

Q. And where was that?

A. Well, the -- towards the rear of the machine. We'd to have look at the patents to point out specifically where the components are shown or located.

Q. And that's where the engine is located, I think you testified to. Sitting here today, can you tell me where any machine that was manufactured and sold on or around 2015 has the hydraulic pump located relative to the location of the engine?

A. I have not looked specifically as to which machine located a pump in a certain location or another.

Q. What about same question for the radiator, can you provide any testimony about where that radiator is on any machine that was made and sold in roughly 2015?

A. Mini skid steer?

Q. Mini skid steer, yes.

28

A. No.

Q. What about the hydraulic reservoir, same question?

A. Specific to the machine that was -- specific to a commercially-available machine?

Q. In 2015, yes.

A. I haven't looked into that.

- IPR2025-00169, Ex. 2021 at 27:3-28:7.

DEMONSTRATIVE EXHIBIT - NOT EVIDENCE

Problems with Velinsky's Experience and Analysis

Q. Would you agree with me that the hydraulics are also used to run certain accessories that the machine might use?

A. Depending on the accessory, yes.

Q. Can you give me some examples of accessories that would use hydraulic power to operate?

A. Well, I'd say that there are certainly, in general, in the skid steer area, that there are tools that are operated hydraulically.

Q. Can you give me some examples of those tools?

A. For example, a skid steer might have a jackhammer at the end for breaking up concrete, let's say.

Q. Any others?

A. If -- I think there's probably a wide variety of tools that could use hydraulics as well.

Q. Are there any other names you can name sitting

30

here today?

A. I haven't prepared to discuss a range of tools that they have.

DEMONSTRATIVE EXHIBIT - NOT EVIDENCE

- IPR2025-00169, Ex. 2021 at 29:2-30:3.

Problems with Velinsky's Experience and Analysis

Q. Have you, in preparation for presenting the opinions that you're providing in your declarations and here today, have you reviewed any specific physical incarnations of mini skid steer machines?

A. No.

Q. Do you know the name or model number of the machine that -- the mini skid steer that Kubota manufactures?

A. No, I don't.

Q. Do you know any of the names of the machines that Vermeer manufactures --

A. No.

Q. -- in their mini skid line, mini skid steer machine?

A. You know, I've operated a lot of machines in my life and career and I -- I don't know if I've ever operated one of them. It's not -- I can't recall a particular instance.

- IPR2025-00169, Ex. 2021 at 12:6-23.

DEMONSTRATIVE EXHIBIT - NOT EVIDENCE

Problems with Velinsky's Experience and Analysis

Q. Would you agree with me that low weight is an important metric for a mini skid steer machine?

A. Well, based on the -- you know, your prior art, I would say yes.

Q. Do you agree with me that having a machine that has high lift capacity, while at the same time having low weight is an important metric that consumers care about in these machines?

A. You know, I would think that from a -- from an engineering standpoint, the higher the capacity relative to the weight is something is typically what someone wants, sure.

Q. You have not had any conversations with Kubota about these issues; is that right?

A. No.

Q. Have you had any conversations with Kubota engineers after being retained for this matter and leading up to the development of your opinions?

A. No.

Q. Did you ask to speak with Kubota engineers, setting aside whether you spoke with them or not, did you ask to talk to anybody?

36

A. No.

DEMONSTRATIVE EXHIBIT - NOT EVIDENCE

- IPR2025-00169, Ex. 2021 at 35:4-36:1.

Problems with Velinsky's Experience and Analysis

Q. Do you have experience in doing CAD drawing?

A. Personally, I don't sit at a computer and draw things with CAD, but I have directed my graduate students, my staff and, you know, students to do that.

Being an old guy, back in my day, we did things by hand.

Q. Are you fluent in any kind of programs?

A. No.

Q. Do you have a -- a passable ability to draw things in CAD or is that just not an area that you dabble in?

A. I don't -- I don't do CAD.

- IPR2025-00169, Ex. 2021 at 13:8-19.

DEMONSTRATIVE EXHIBIT - NOT EVIDENCE

Problems with Velinsky's Experience and Analysis

A. Well, there -- I did communicate through one of the attorneys my desire to have a mechanism drawn and animated that appears in Appendix A in my declaration. But I directed the attorney to produce -- have that produced in the same way that I would tell my graduate students or my staff in the research center, you know, what I was hoping to see, but I had no knowledge of who actually drew that.

Q. What specifically did you -- well, let me back up a little bit. Do you know the name of the attorney you were interfacing with that do that kind of --

A. That was Kelly Lyle.

Q. And do you recall what specifically you asked Miss Lyle to do?

A. Specifically, I don't recall, but generally, the goal was to show that we could lower the fixed pivots on the machine and accomplish the relatively linear motion of four-bar mechanism.

Q. Were you responsible for identifying for Miss Lyle where those points were going to be on the machine or was she tasked with identifying those points?

A. Well, she tasked whoever did the work.

Q. But those points, to be clear, didn't come from you, she or people she worked with identified where those points were gonna be located; is that right?

A. Well, I knew that we could lower the pivot points and attain, you know, a motion that would be consistent with that. So I generally said I'd like them down, I'd like them in this general area, but didn't pinpoint exactly the measurements.

It was really to demonstrate that kinematically we could simulate a four bar mechanism that would give this linear motion or vertical lift as it's referred to.

Q. So if I understand correctly, you asked Miss Lyle to assist in generating a model and the instructions to her, the request to her was to simply get those pivot points lower. And then she worked with

16

others to identify where those points would be and then modeled it; is that fair to say?

A. I would say that's fair.

- IPR2025-00169, Ex. 2021 at 14:4-16:3.

DEMONSTRATIVE EXHIBIT - NOT EVIDENCE

Problems with Velinsky's Experience and Analysis

Q. In your interactions with Miss Lyle, did you discuss the other components of the mini skid steer that would need to be accommodated by those pivot points? And by other components, I'm referring to engines, hydraulic pumps, motors, things of that nature.

A. You know, clearly there were parts that would need to be avoided, but I was gonna leave the specifics to the person that was moving the links run -- the pivots run.

- IPR2025-00169, Ex. 2021 at 17:3-11.

DEMONSTRATIVE EXHIBIT - NOT EVIDENCE

Problems with Velinsky's Experience and Analysis

Q. So before the break, we were talking about the KR996 reference and I think you'll agree with me that throughout your various declarations, you've articulated a number of modifications that you believe a skilled artisan would make to the machine identified in that reference, is that fair to say?

A. Yes.

Q. And if you can't answer this across the board and we need to dig into more of the details, that's perfectly fine, but I'm trying to understand whether this attachment and detachment feature that we've talked about today --

A. Okay.

Q. -- is a feature that, in your opinion, would survive those modifications or would be removed as part of the process of making modifications, in your opinion, or have you considered that?

A. You know, I -- I hadn't really considered that level of detail. But it was more of the fundamental mechanism that I felt was important.

Q. Sitting here today, with that question kind of floating in the air, what is your sense for which way you would go; yes, it would be retained or no, it would not be retained?

A. I haven't really thought about it, and I think that it would clearly depend on the application, specifics and what the desire for the machine was to be.

- IPR2025-00169, Ex. 2021 at 108:7-109:8.

DEMONSTRATIVE EXHIBIT - NOT EVIDENCE

Problems with Velinsky's Experience and Analysis

Q. Would this alternative device that you've opined that a skilled artisan would be motivated to create, would this device retain the connect/disconnect feature for attachments taught in the KR996 patent or

have you considered that?

A. I haven't really considered that.

- IPR2025-00169, Ex. 2021 at 135:22-136:2.

DEMONSTRATIVE EXHIBIT - NOT EVIDENCE

Problems with Velinsky's Experience and Analysis

Q. Given the conversation that we had earlier about the way in which the sidewall of the tire interfaces with those rails, 38, do you agree with me that that system would no longer work because now we have treads instead of tires?

A. I haven't evaluated that and I can't say that, you know, unequivocally that the treads would be – the treads are moving to provide the machine motion relative to the ground. So I can't say unequivocally that it could work, but I haven't assessed whether or not it would absolutely work as such.

- IPR2025-00169, Ex. 2021 at 136:3-13.

DEMONSTRATIVE EXHIBIT - NOT EVIDENCE

Problems with Velinsky's Experience and Analysis

Q. Those elements, those secondary considerations,

58

those are elements that were identified to you by Kubota's attorneys; is that correct?

A. That's the -- the things that I just recited, those terms?

Q. Yes, sir.

A. Yes, I would say so.

Did you believe you had an obligation to assess those elements before deriving an opinion on obviousness in this case?

A. No. The -- I did didn't use that in any way in establishing my opinions in the case.

- IPR2025-00169, Ex. 2021 at 57:25-58:13.

DEMONSTRATIVE EXHIBIT - NOT EVIDENCE

Problems with Velinsky's Experience and Analysis

Q. Do you believe that those kinds of evidence would be relevant to your opinions on obviousness, if it existed -- let me ask that -- I'm gonna ask that differently.

If there were evidence showing that the industry considered a vertical lift mini skid steer machine to be a significant technological achievement, that evidence, that would be relevant to your obviousness assessment in this case?

A. No.

Q. What if you learned that Kubota decided to copy the ideas of either Vermeer or Toro when they released their vertical lift mini skid steer machine, would that be relevant to your assessment of obviousness?

A. I don't know what you mean by copy.

Q. Well, decide -- typical way that you would understand copying, deciding to take ideas, things from the machines that Toro and Vermeer released and incorporate those it into a machine of its own, would

62

that be relevant to your assessment of obviousness?

A. No.

- IPR2025-00169, Ex. 2021 at 61:7-62:2.

DEMONSTRATIVE EXHIBIT - NOT EVIDENCE

Problems with Velinsky's Experience and Analysis

Q. I guess what I'm trying to figure out is whether the question you were answering is would it have been obvious for a skilled artisan to incorporate a vertical lift path on mini skid steer machine. Is that the question you were asking when you were determining whether -- when you were assessing whether the claims are obvious?

A. In the most general sense, I would say yes.

- IPR2025-00169, Ex. 2021 at 64:18-25.

DEMONSTRATIVE EXHIBIT - NOT EVIDENCE

Problems with Velinsky's Experience and Analysis

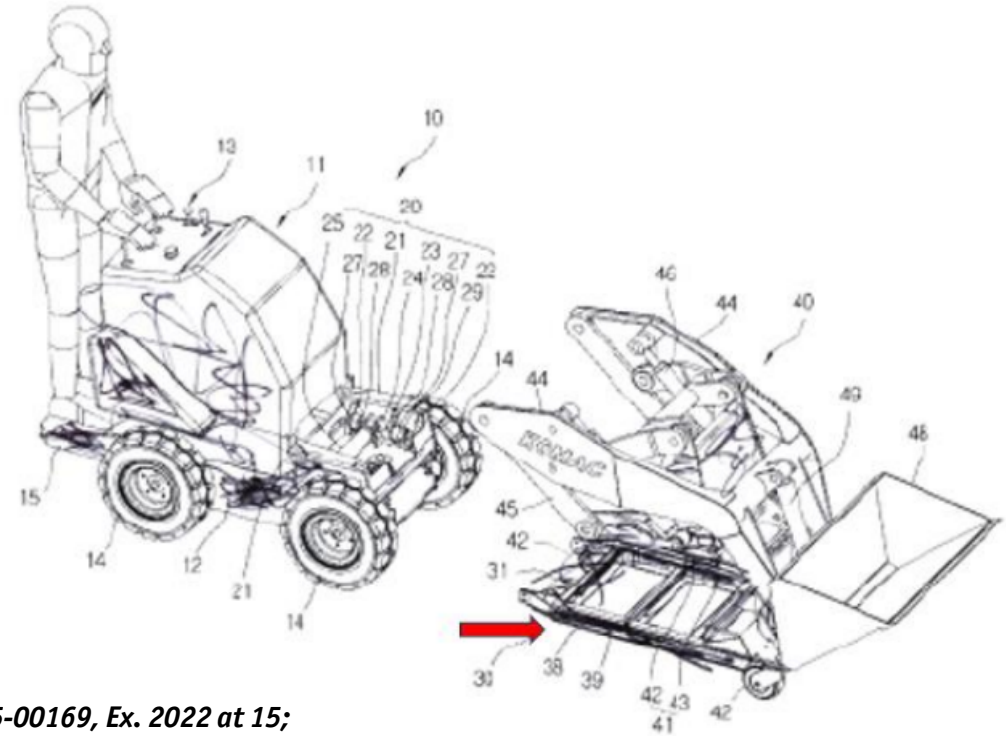

- IPR2025-00169, Ex. 2022 at 15;
- IPR2025-00169, Paper 23 at 37.

See also IPR2025-00169, Ex. 2021 at 66:9-25.

DEMONSTRATIVE EXHIBIT - NOT EVIDENCE

Problems with Velinsky's Experience and Analysis

A I don't know anything about the other expert. I didn't even know they had an expert. So I can't comment on that. I'm not -- not prepared to discuss that now.

Q Okay. So you never reviewed Dr. Flemming's expertise in his declaration or his CV?

A No, not at all.

Q Did you review Dr. Flemming's declaration?

A No.

- IPR2025-00169, Ex. 2039 at 34:4-13.

DEMONSTRATIVE EXHIBIT - NOT EVIDENCE

Objective Indicia Materials

[0007] Finally, the vertical reach of the loader arms on compact utility loaders is somewhat limited. While high lift loader arms are known on full size skid steer loaders as disclosed in U.S. Pat. No. 5,542,814, the use of such high lift loader arms on a compact utility loader has been considered difficult if not impossible due to size and durability constraints. Accordingly, it would be a further advance in the art to provide a way of safely and durably providing high lift loader arms on compact utility loaders to extend the vertical reach of such loaders. For example, this would allow a compact utility loader to dump debris or materials at higher elevations than previously, thus allowing the use of larger trucks to accept such debris or materials for transport.

- IPR2025-00169, Ex. 2004 at 11.

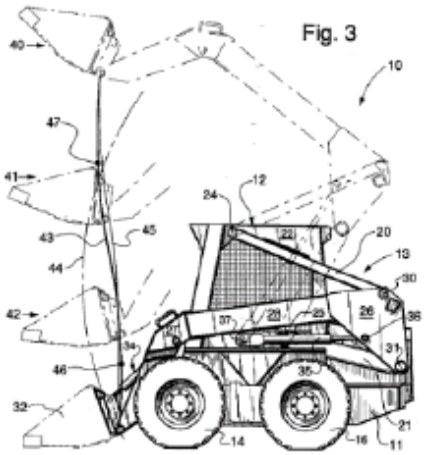

- IPR2025-00169, Ex. 2005 at Fig. 3.

DEMONSTRATIVE EXHIBIT - NOT EVIDENCE

Objective Indicia Materials

Project Risks and Risk Management Plan

List the risks that may limit the project from achieving the goal. Consider all aspects including: marketing, competition, distribution, quality, performance, price, design, supply, etc. For each risk state the impact, the likelihood of occurring, the mitigation actions to prevent the occurrence and the contingency plan if it occurs.

Priority	Risk	Likely To Occur	Impact	Mitigation Actions	Contingency Actions
Rank	What is the issue that may impact the project?	High Medium Low	If it occurs how will it effect the project?	What are the actions being taken to prevent the occurrence or minimize the impact?	If the Risk does occur what actions will the team take?
1	Missing target costs due to expense of desired product features	High	Results in uncompetitive pricing or a product that does not meet customer requirements	Utilize VOC feedback to decide which new features can be downgraded; Reduce machine weight DFMA review of major components and systems	Revise specs and features to further reduce weight and cost
2	Loader arm complexity and durability results in failures	High	Increased weight, cost, and time to develop the arm	Iterative rounds of FEA in the 2.0 phase to address problem areas	Revise and reinforce loader design

3.0 Development Entrance Gate W298: Next Gen TX Details: 1 page

53

DEMONSTRATIVE EXHIBIT - NOT EVIDENCE

- IPR2025-00169, Ex. 1030 at 54.

Objective Indicia Materials

Competitive Product Evaluation

Provide an objective and comprehensive evaluation of competitive products available to the customer, including our product that is now in the market. Consider the total product including: performance, quality, marketing message, serviceability, ease-of-operations, appearance, finish, packaging, availability, specification statements, etc.

Tracked CULs	Toro NextGen W TX	Toro NextGen N TX	Toro S25W TX	Ditch Witch SK 750/755	Vermeer S650 TX	Vermeer S800 TX
Tipping capacity (lbs)	3,070	2,857	1,580	2,285	1,890	2,400
Rated operating capacity (35% of tip)	1,075	1,000	553	800	660	840
Hinge pin height (inches)	81	81	66	81	80	84.5
Horsepower (gross rating)	24.8	24.8	24.8	24.8 / 32.8	24.8	35.1
Max ground speed - forward (mph)	4.7	4.7	4.0	4.7	4.5	4.5
Max ground speed - reverse (mph)	4.7	4.7	2.0	4.7	4.5	4.5
Machine weight (lbs)	2,633	2,450	2,001	2,890	2,560	2,950

- Next Gen vertical lift loader arm design is a key differentiator
- Next Gen 1,000+ lb. rated operating capacity is unprecedented
  - Next Gen (wide) rated operating capacity is 28% greater than Vermeer's
- Next Gen units will weigh significantly less than Ditch Witch and Vermeer's largest units
  - Next Gen (wide) will weigh 317 lbs. less than Vermeer S800 TX
  - Doing more with a machine that has a lighter footprint

54

- IPR2025-00169, Ex. 1030 at 55.

DEMONSTRATIVE EXHIBIT - NOT EVIDENCE

Objective Indicia Materials

Proposed Solution

Describe in detail the recommended solution that best meets the customer needs and the business needs. Identify the fundamental system and sub-system alternatives that must be considered, and state why this choice is preferred.

Key Features that innovate and "leapfrog" the competition

- Vertical lift loader design
  - Outperform the competition on lift capacity while retaining a smaller, more compact machine
  - 1000 lb operating capacity from a sub-2,500 lb machine

- Re-establish Toro as the CUL market leader
  - Toro invented the category, and Toro is re-inventing the category through TX 1000 product innovation
    - Vertical lift loader arm design and traction controls

- IPR2025-00169, Ex. 1030 at 56.

DEMONSTRATIVE EXHIBIT - NOT EVIDENCE

Objective Indicia Materials

"One of the greatest innovations on the all-new Dingo TX 1000 is its exclusive vertical lift loader arm design. This new design keeps loads closer to the machine, increasing the rated operating capacity to over 1,000 lbs. Unlike radial lift arms, a load on this Dingo follows a consistent vertical lift path up to full height. That makes gauging load tolerance safe and easy, so you can lift more - with more confidence. The 81" hinge pin height also delivers increased reach at full height. And this innovative design allows Toro to increase load capacity and reach without significantly increasing machine size or weight."

- IPR2025-00169, Ex. 1030 at 56-57.

DEMONSTRATIVE EXHIBIT - NOT EVIDENCE

Objective Indicia Materials

[redacted]

- IPR2025-00169, Ex. 2027 at 48.

DEMONSTRATIVE EXHIBIT - NOT EVIDENCE

PROTECTIVE ORDER MATERIAL

Objective Indicia Materials

[redacted]

- IPR2025-00169, Ex. 2027 at 13.

DEMONSTRATIVE EXHIBIT - NOT EVIDENCE

PROTECTIVE ORDER MATERIAL

Objective Indicia Materials

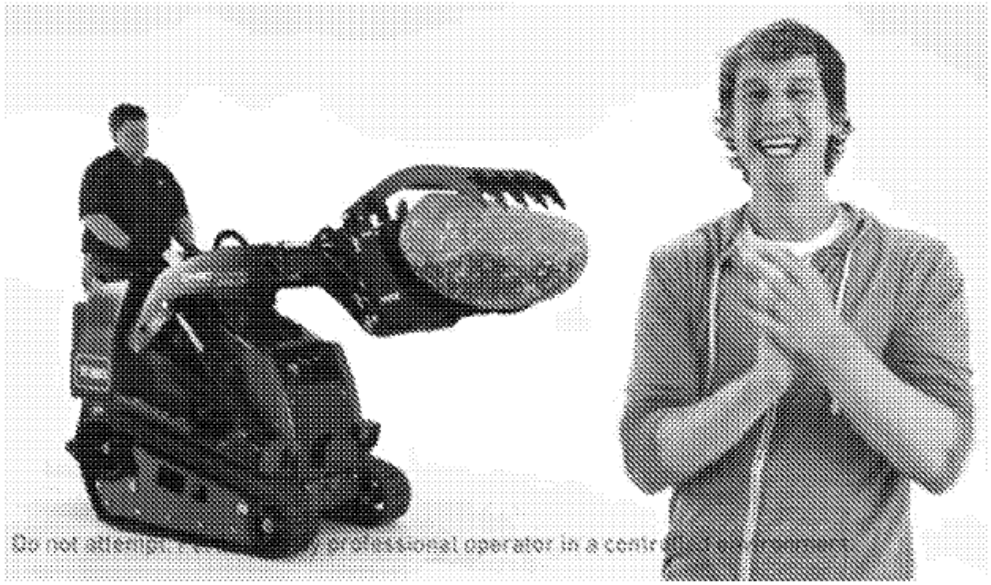

"vertical loader arms which are **really** unique. . ."

https://www.youtube.com/watch?v=ckMKUkizcF8

- IPR2025-00169, Ex. 1030 at 127.

DEMONSTRATIVE EXHIBIT - NOT EVIDENCE