US 20140191389A1

(19) United States

(12) Patent Application Publication

LEE et al.

(10) Pub. No.: US 2014/0191389 A1

(43) Pub. Date: Jul. 10, 2014

(54) SEMICONDUCTOR DEVICE AND METHOD OF MANUFACTURING THE SAME

(71) Applicant: **SK HYNIX INC.**, Icheon-si (KR)

(72) Inventors: **Ki Hong LEE**, Suwon-si (KR); **Seung Ho PYI**, Seongnam-si (KR); **Seok Min JEON**, Yeoju-gun (KR)

(73) Assignee: **SK HYNIX INC.**, Icheon-si (KR)

(21) Appl. No.: **13/845,446**

(22) Filed: **Mar. 18, 2013**

(30) **Foreign Application Priority Data**

Jan. 7, 2013 (KR) 10-2013-0001656

Publication Classification

(51) **Int. Cl.**
H01L 23/498 (2006.01)

(52) **U.S. Cl.**
CPC *H01L 23/498* (2013.01)
USPC **257/734**

(57) **ABSTRACT**

A semiconductor device includes a substrate in which a cell region and a contact region are defined, a pad structure including a plurality of first conductive layers and a plurality of first insulating layers formed alternately with each other in the contact region of the substrate, wherein an end of the pad structure is patterned stepwise, portions of the first conductive layers exposed at the end of the pad structure are defined as a plurality of pad portions, and the plurality of pad portions have a greater thickness than unexposed portions of the plurality of first conductive layers.

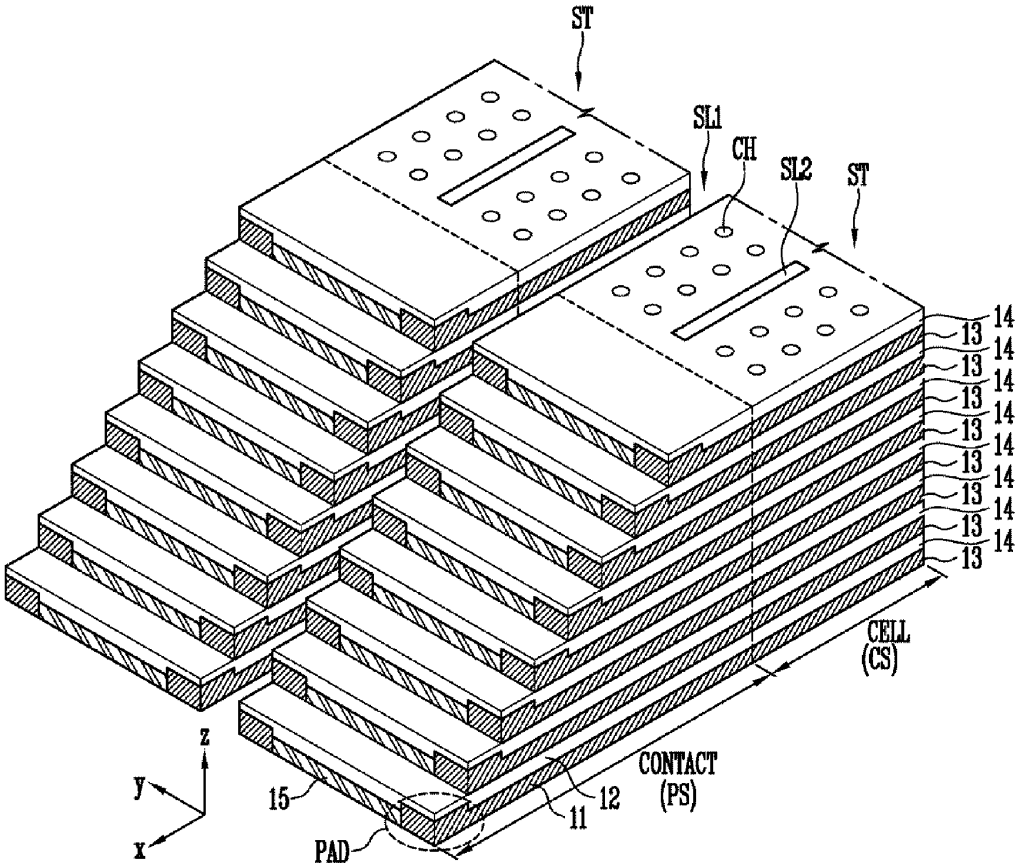

FIG. 1A

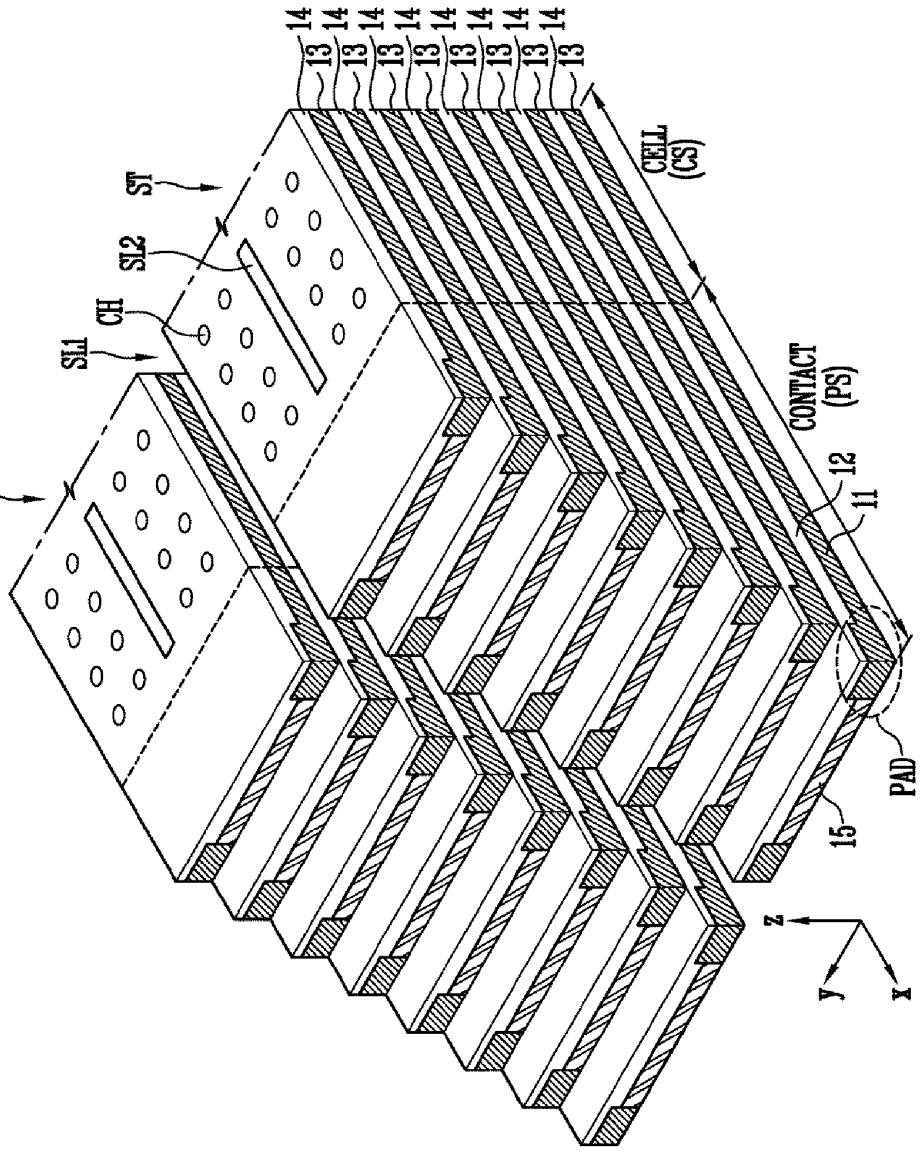

FIG. 1B

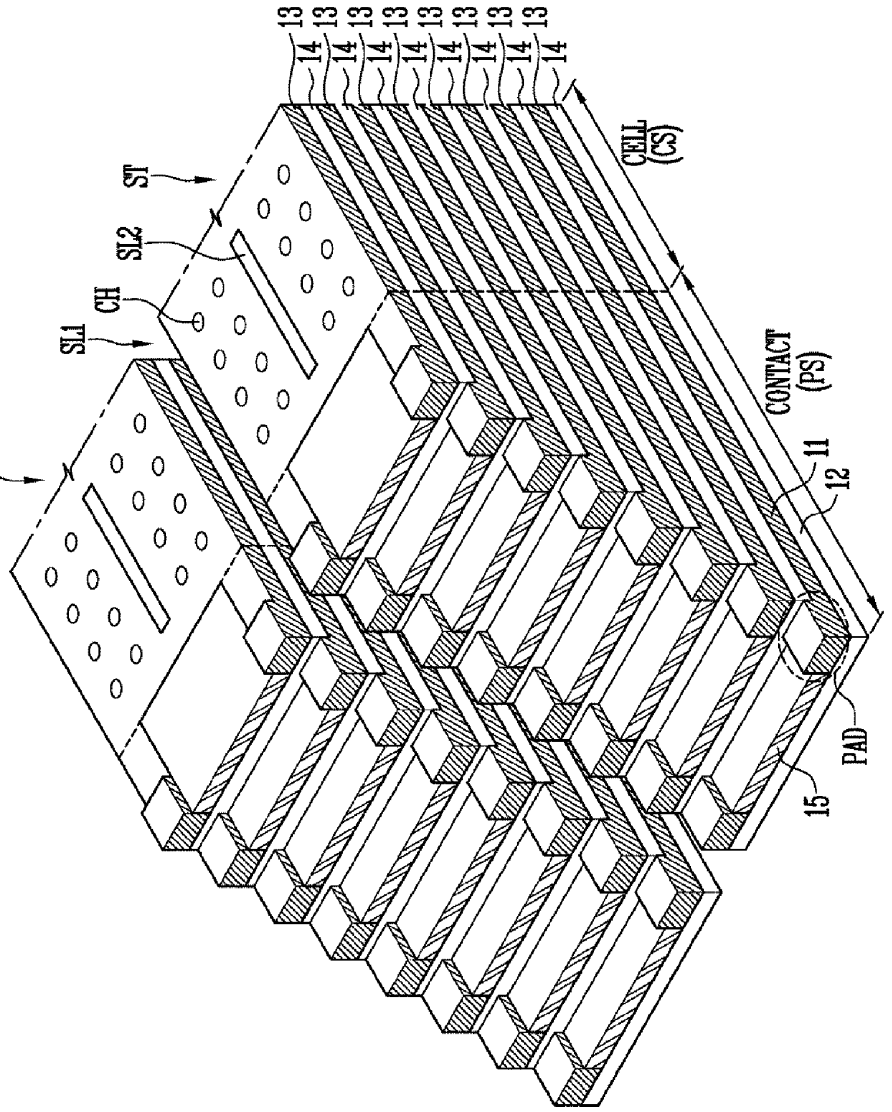

FIG. 2A

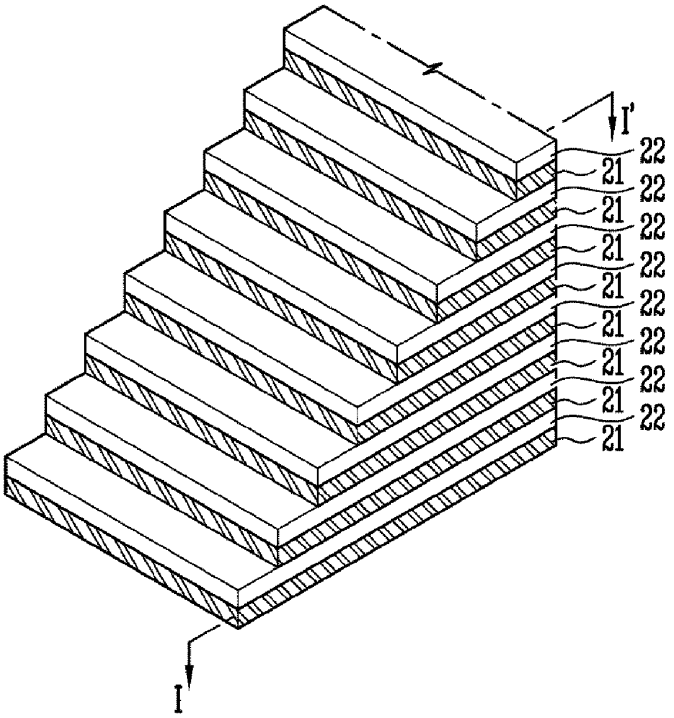
I'
22
21
22
21
22
21
22
21
22
21
22
21
22
21
22
21
I

FIG. 2B

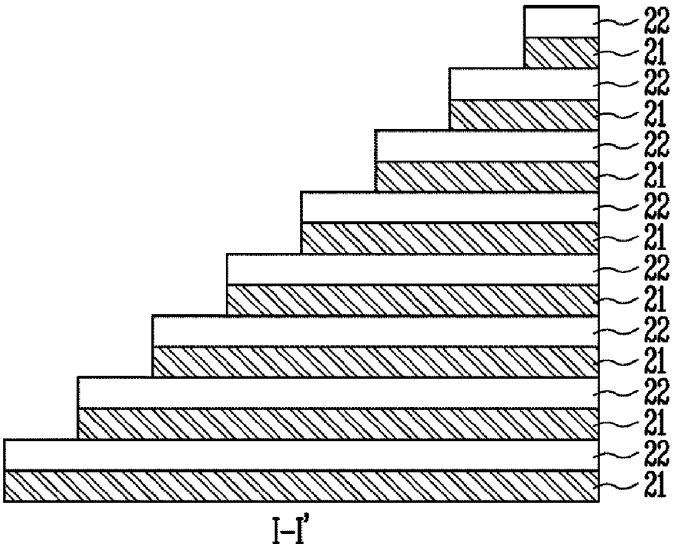
22
21
22
21
22
21
22
21
22
21
22
21
22
21
22
21
I-I'

FIG. 3A

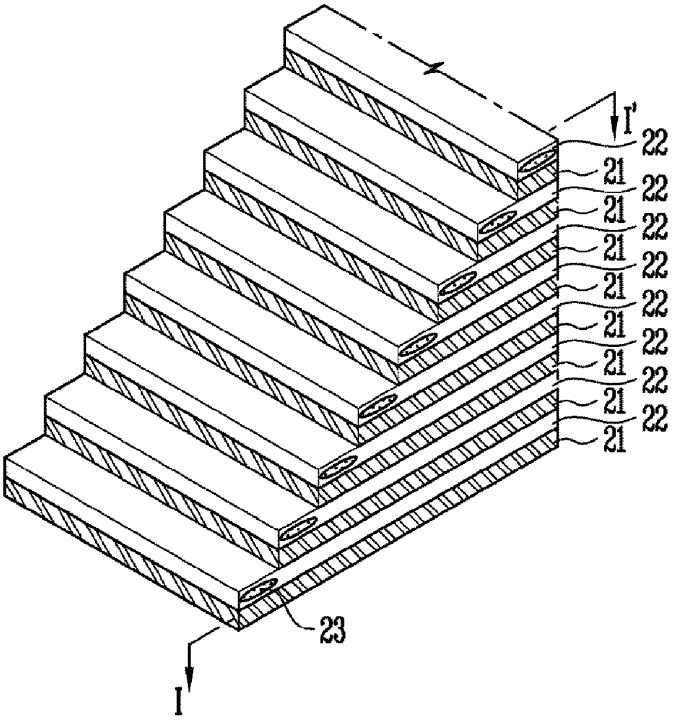
I'
22
21
22
21
22
21
22
21
22
21
22
21
22
21
22
23
I

FIG. 3B

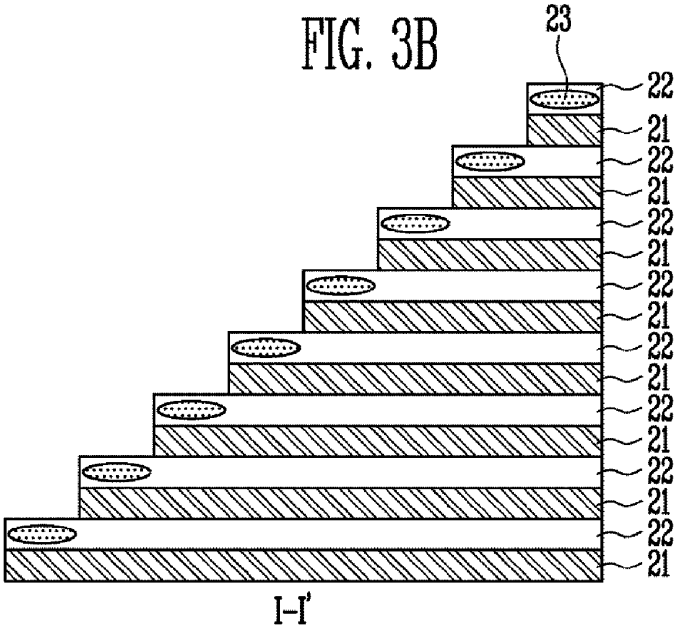
23
22
21
22
21
22
21
22
21
22
21
22
21
22
21
22
21
I-I'

FIG. 4A

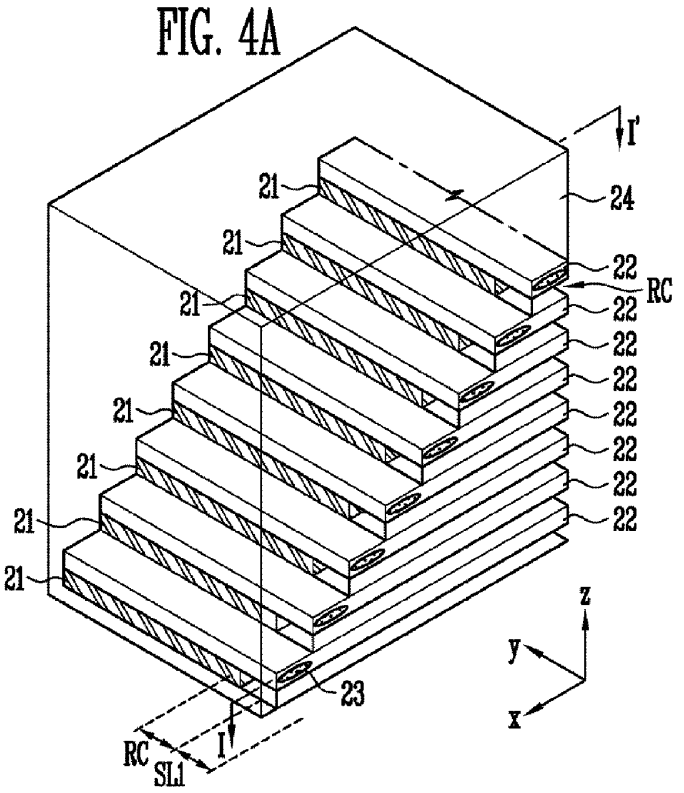

FIG. 4B

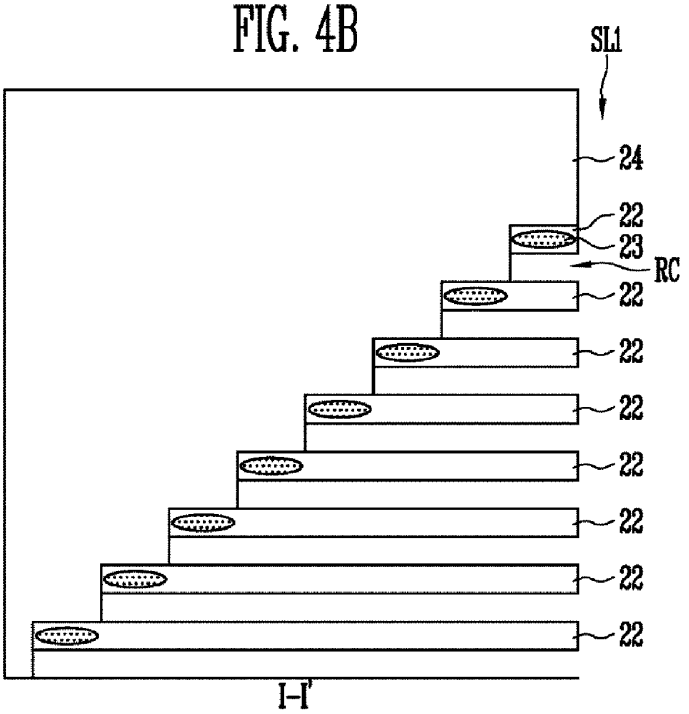

FIG. 5A

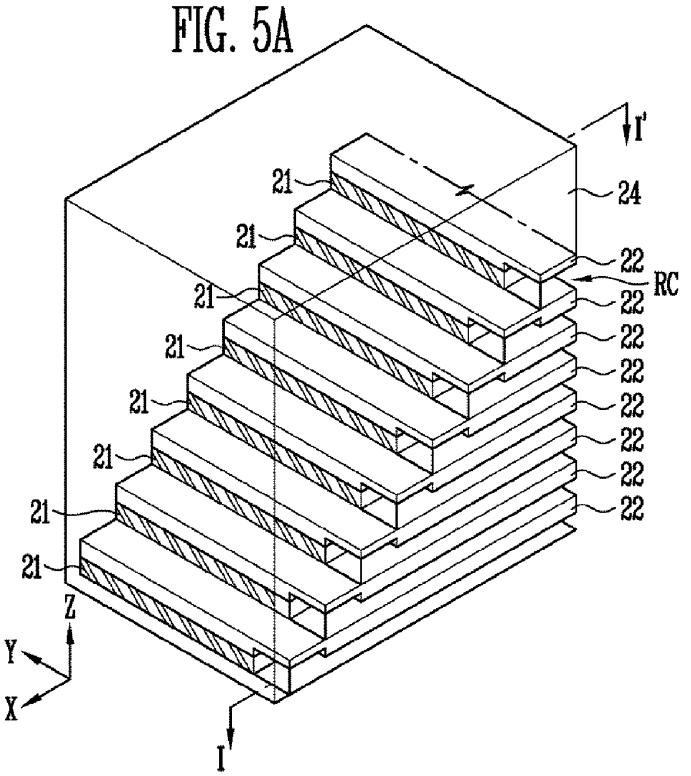

FIG. 5B

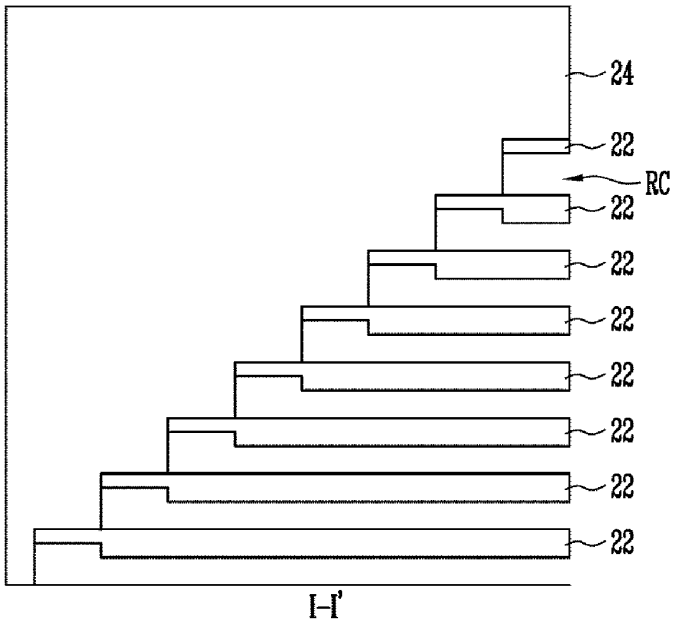

FIG. 6A

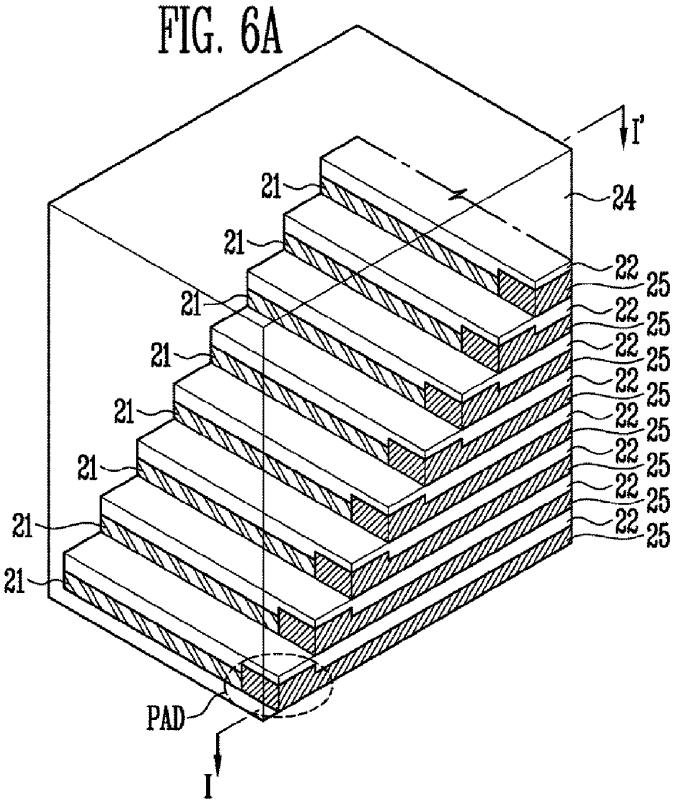

FIG. 6B

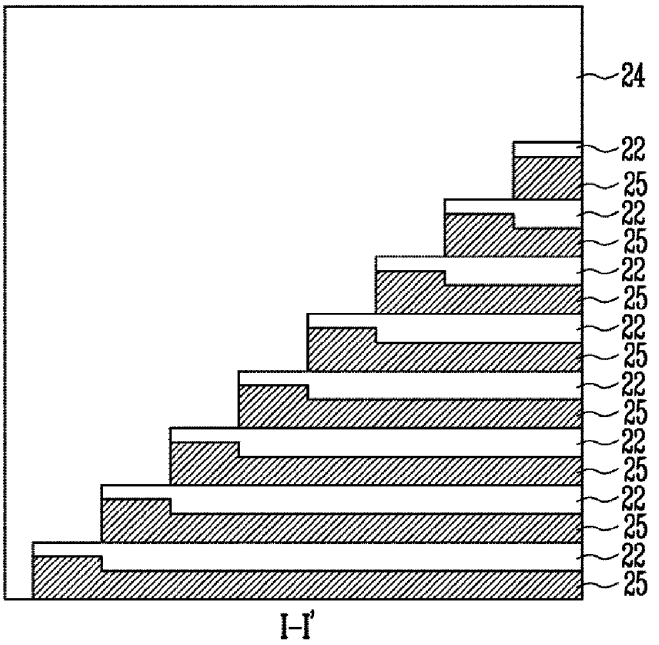

FIG. 7A

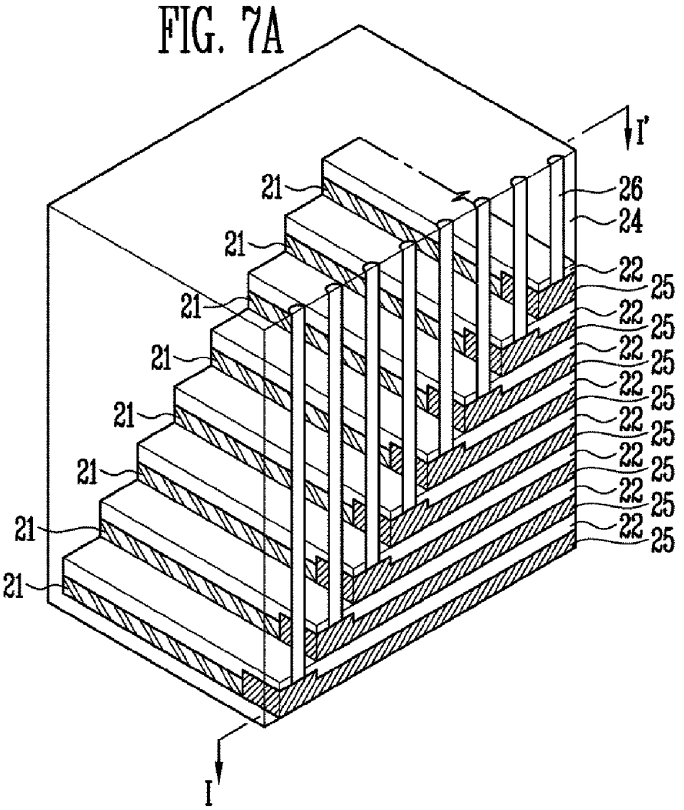
I'
21
21
21
21
21
21
21
21
26
24
22
25
22
25
22
25
22
25
22
25
22
25
22
25
22
25
I

FIG. 7B

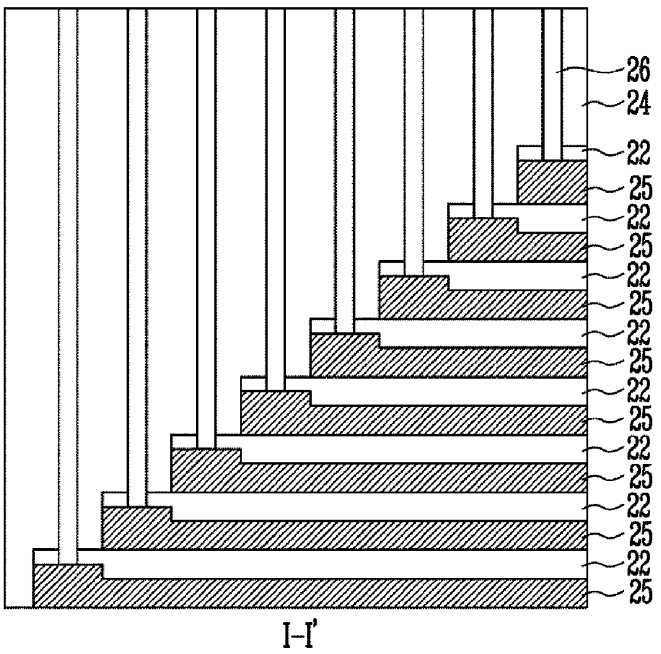
26
24
22
25
22
25
22
25
22
25
22
25
22
25
22
25
I-I'

FIG. 8A

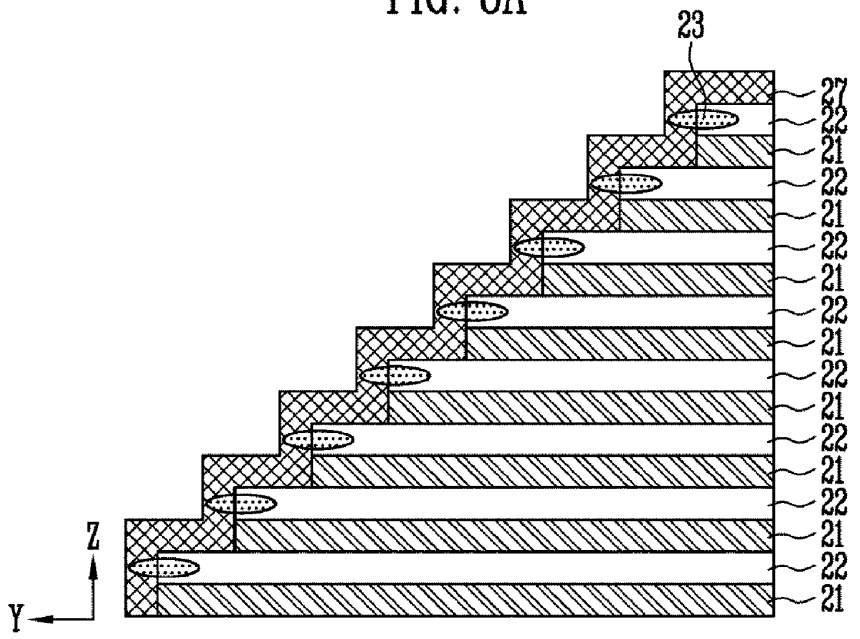
23
27
22
21
22
21
22
21
22
21
22
21
22
21
22
21
22
21
Z
Y

FIG. 8B

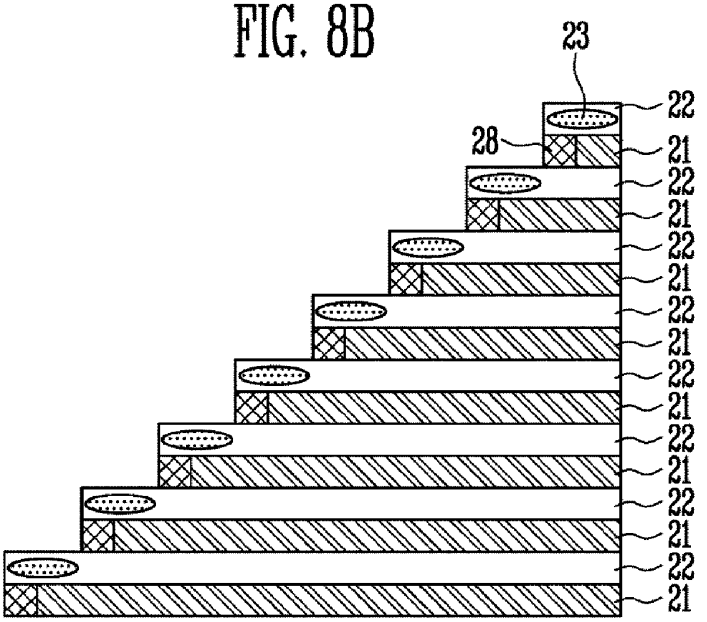
23
22
28
21
22
21
22
21
22
21
22
21
22
21
22
21
22
21

FIG. 9A

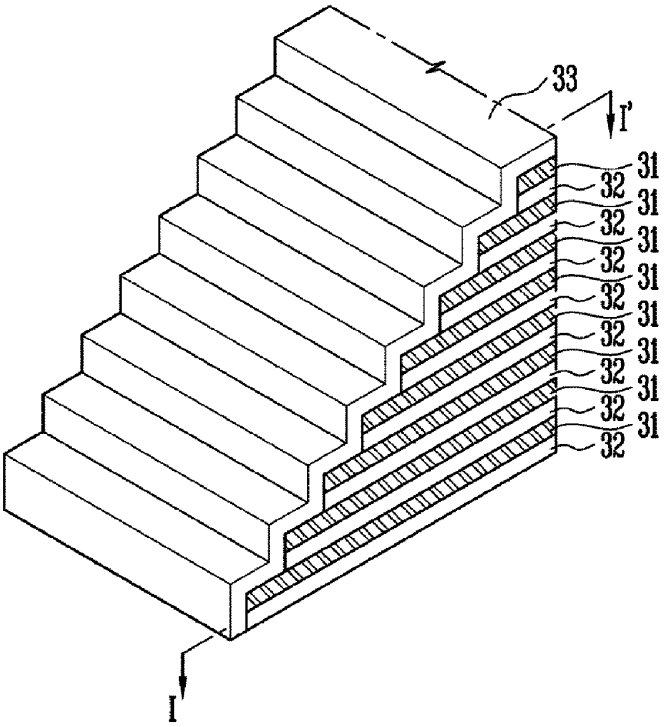
33
I'
31
32
31
32
31
32
31
32
31
32
31
32
31
32
31
32
I'

FIG. 9B

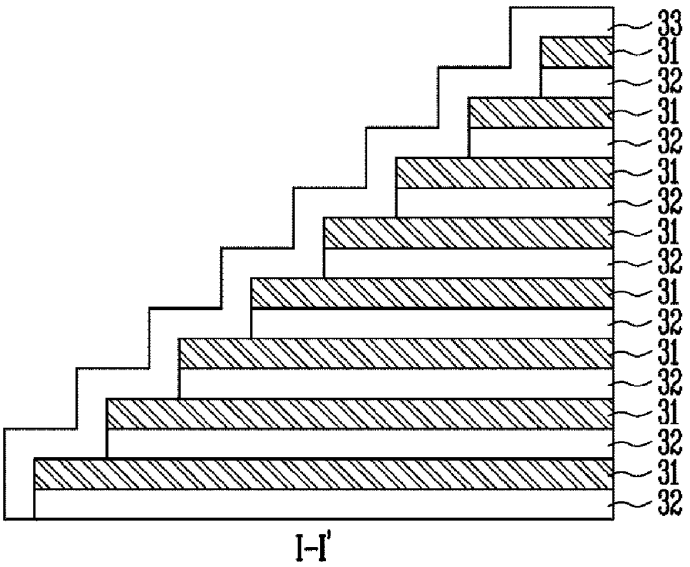
33
31
32
31
32
31
32
31
32
31
32
31
32
31
32
I-I'

FIG. 10A

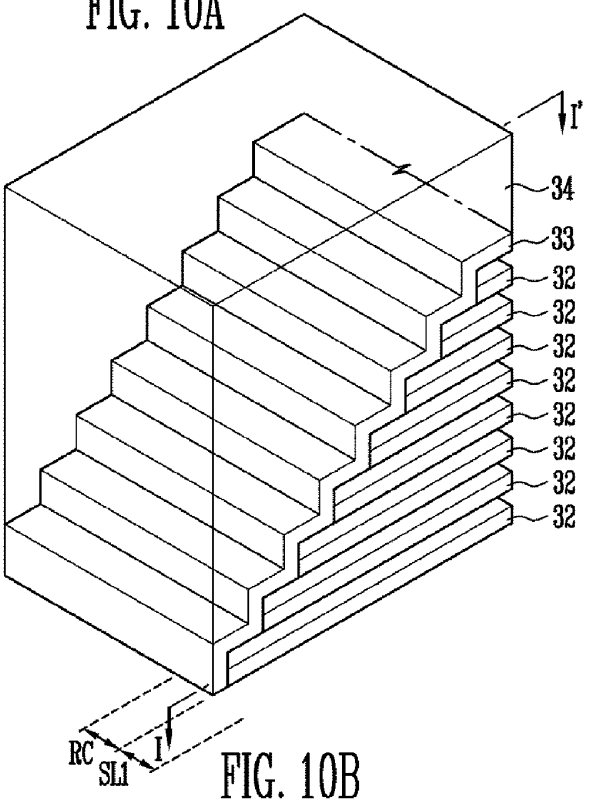

FIG. 10B

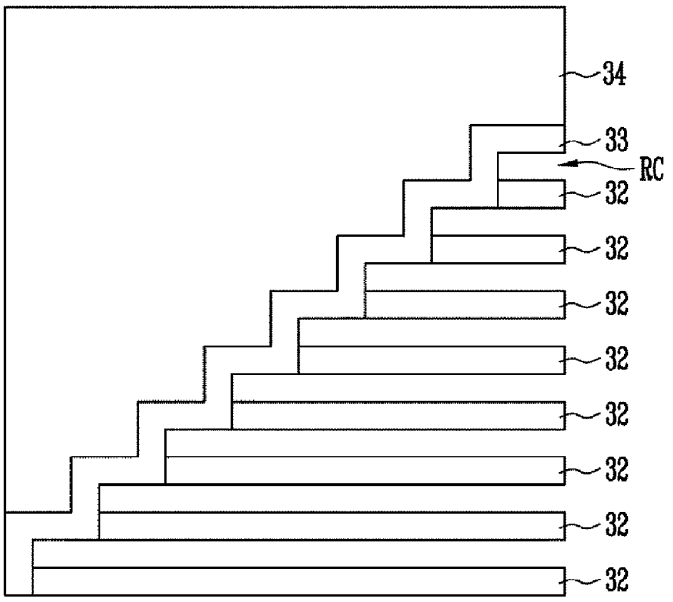

FIG. 11A

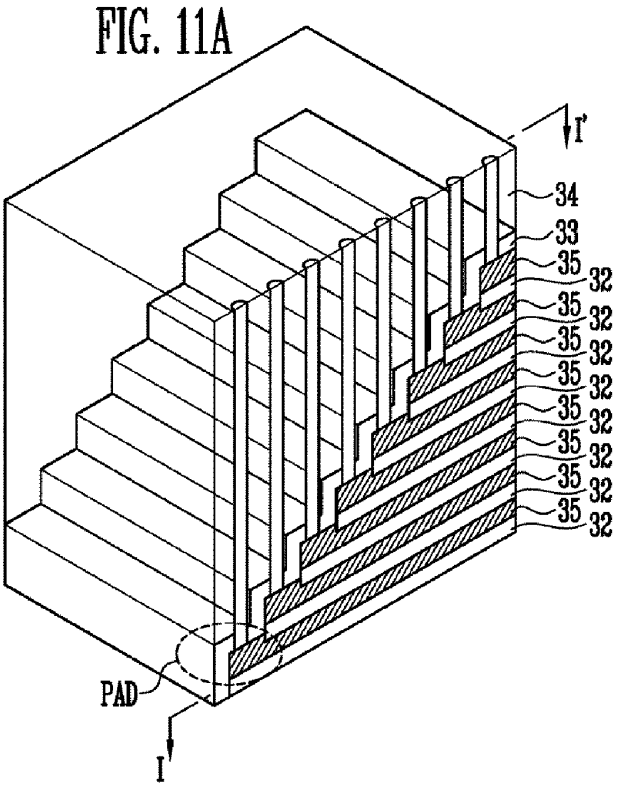

FIG. 11B

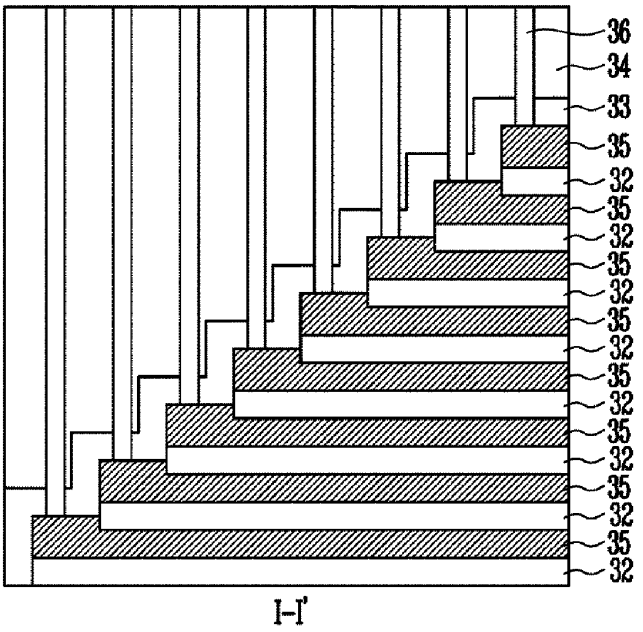

FIG. 12A

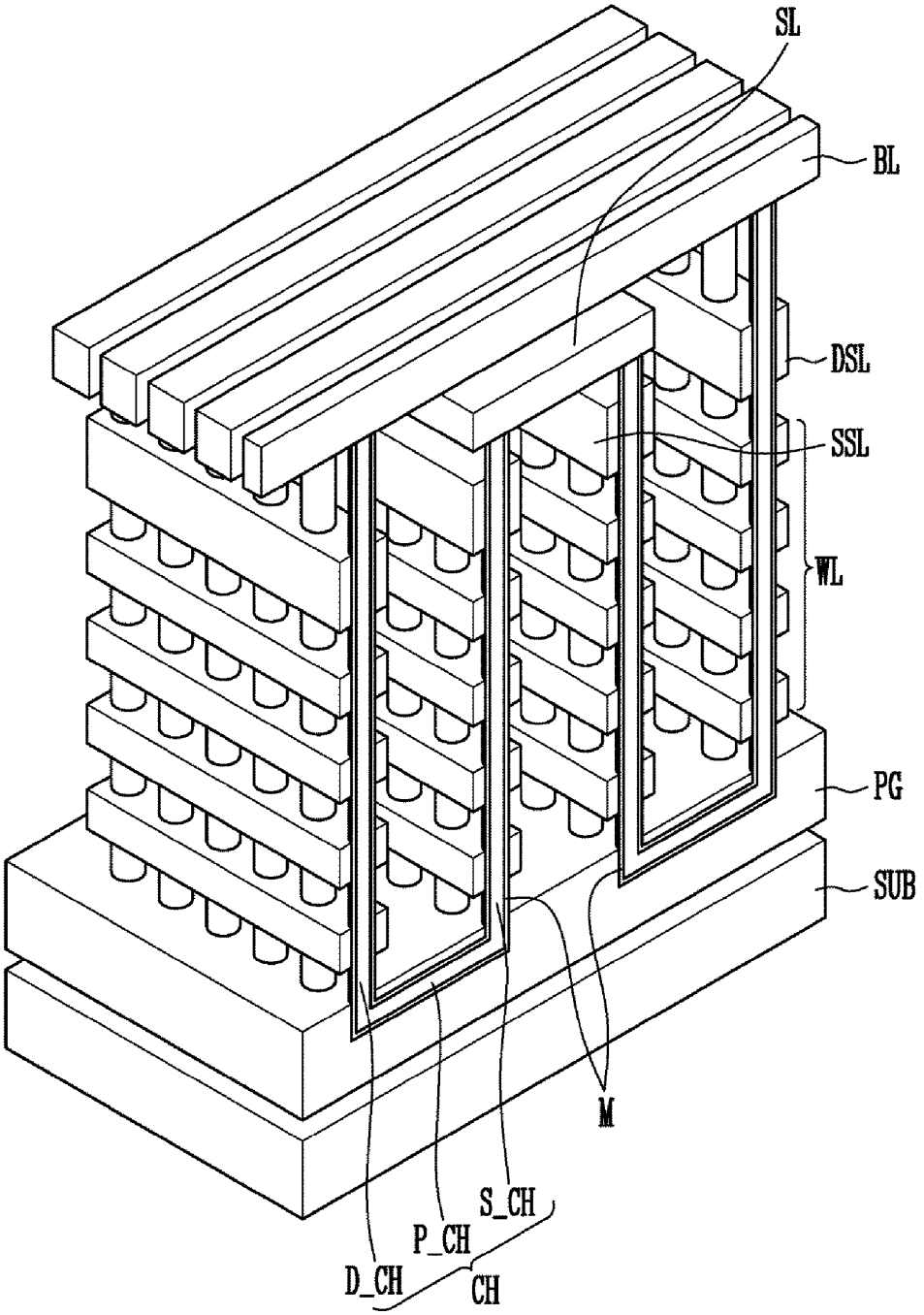

FIG. 12B

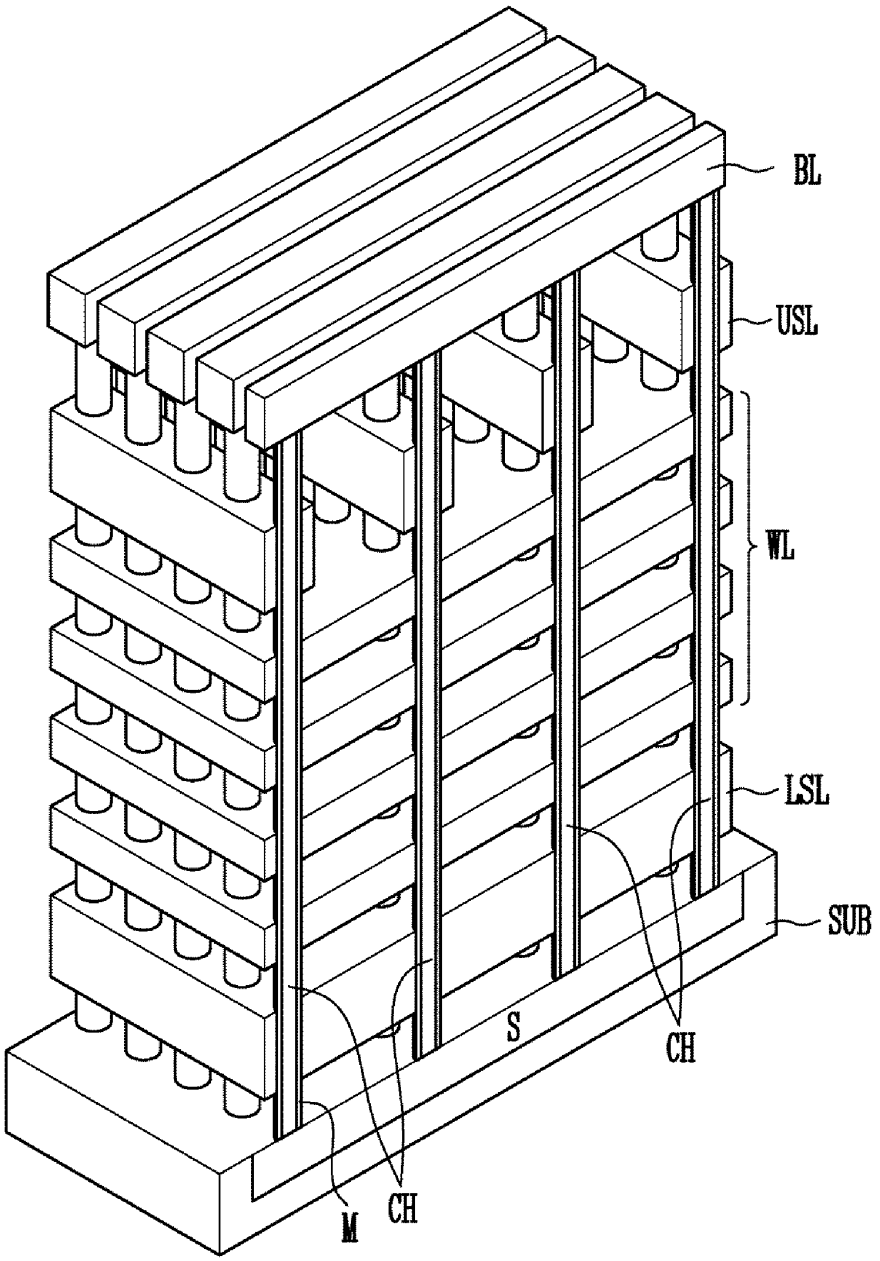

FIG. 12C

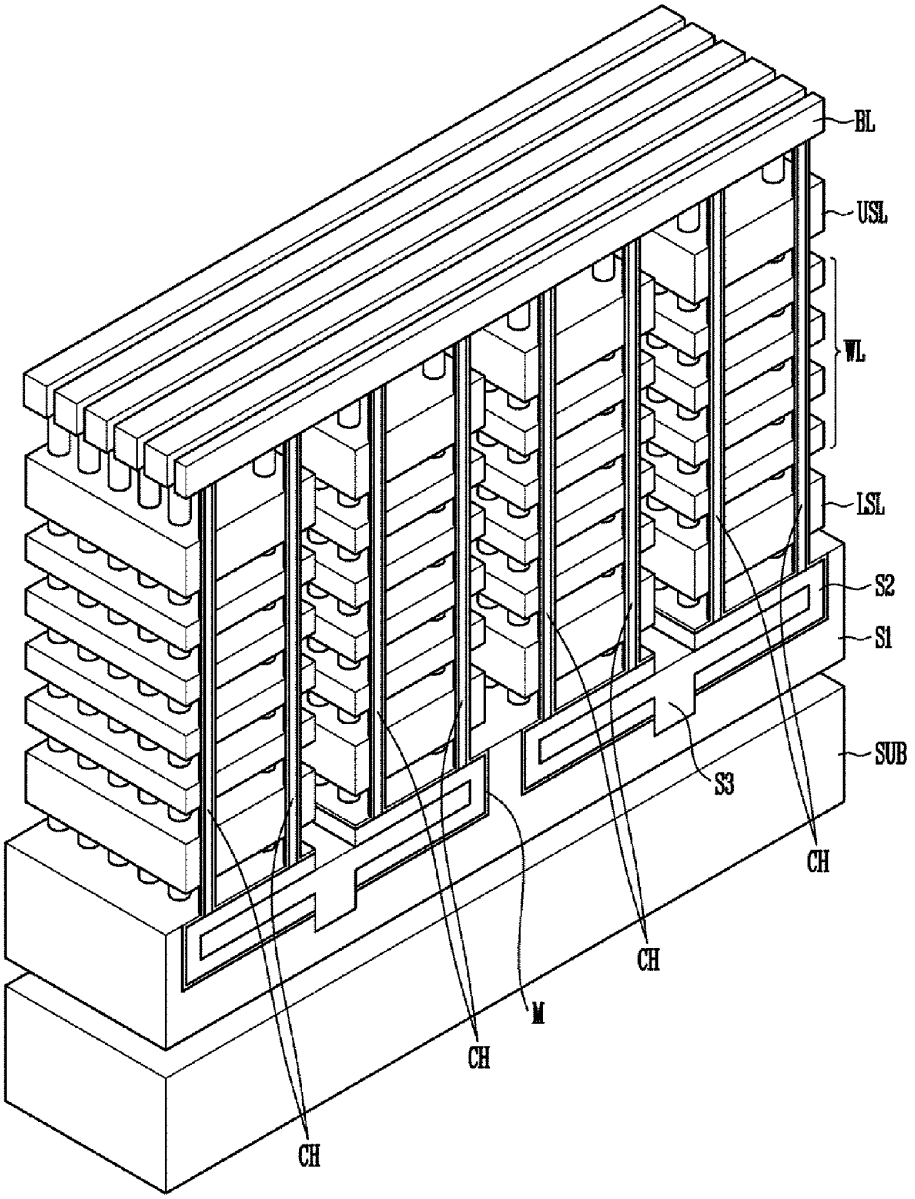

FIG. 12D

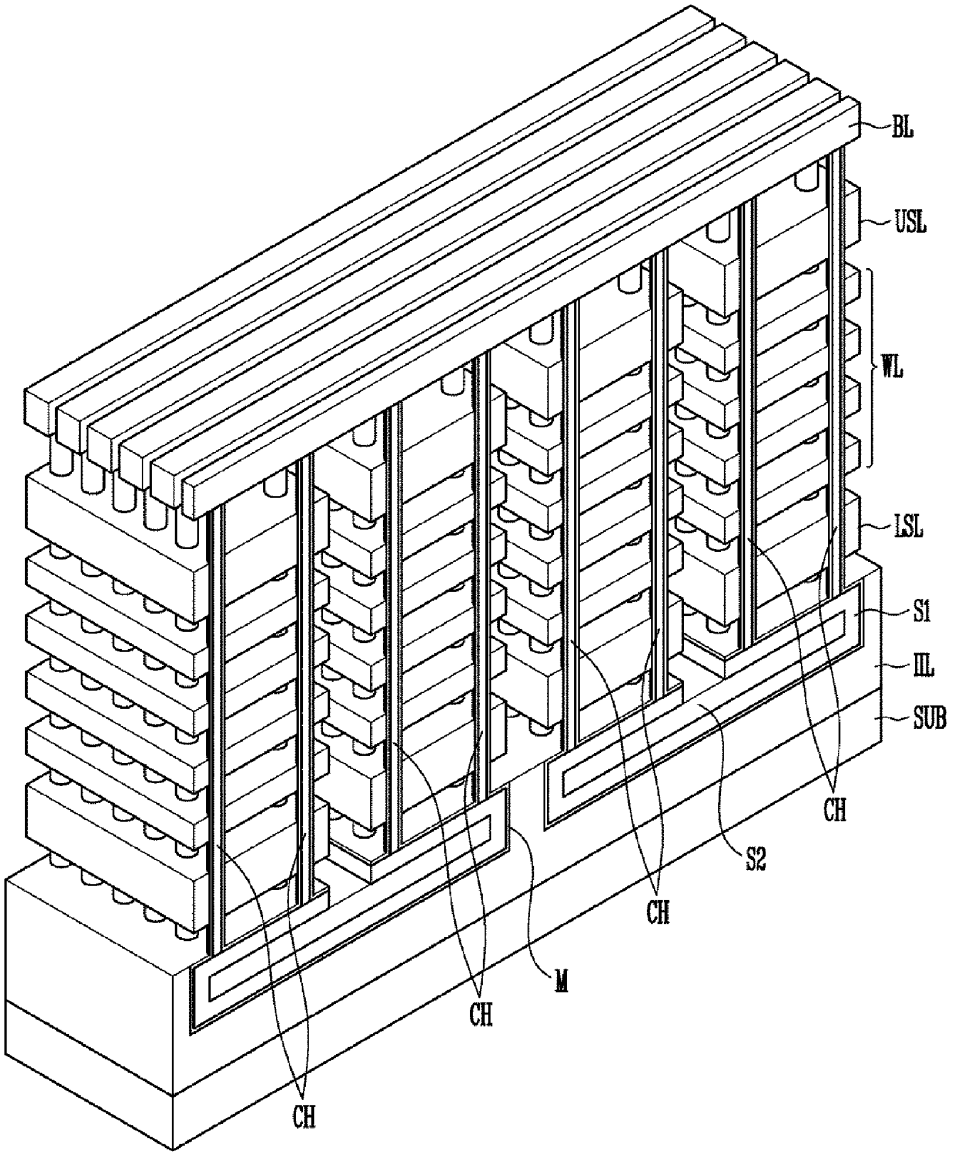

FIG. 13

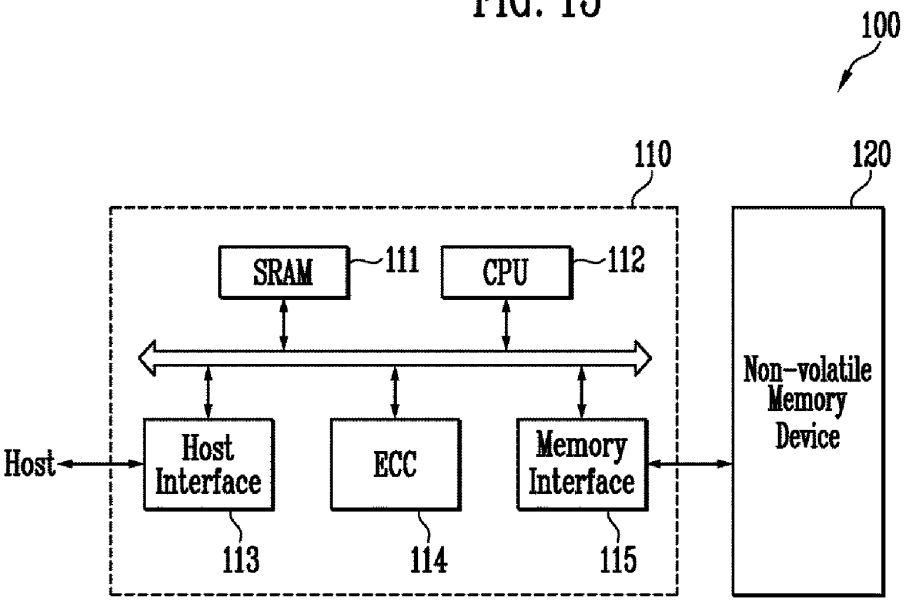
100
110
120
SRAM
111
CPU
112
Host
Host Interface
ECC
Memory Interface
Non-volatile Memory Device
113
114
115

FIG. 14

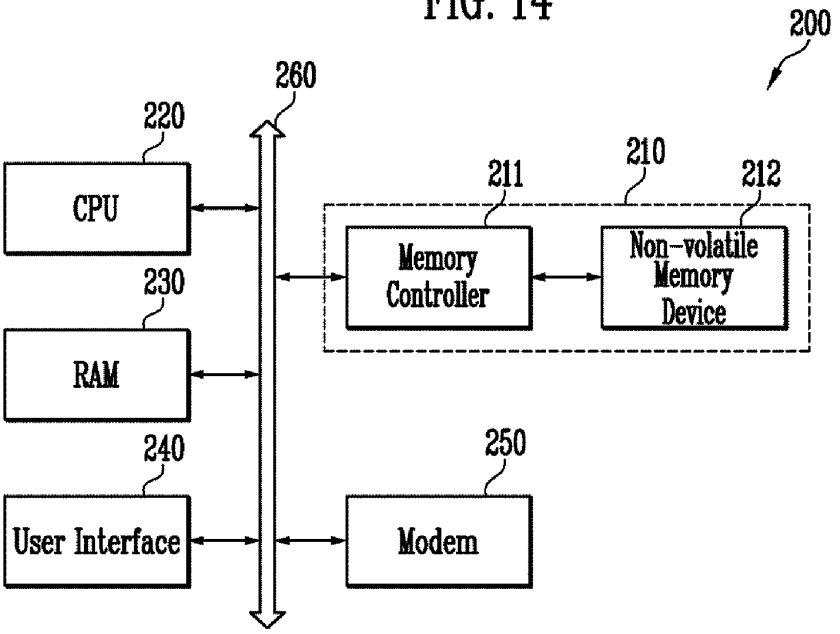
200
260
220
CPU
211
210
212
Memory Controller
Non-volatile Memory Device
230
RAM
240
250
User Interface
Modem

SEMICONDUCTOR DEVICE AND METHOD OF MANUFACTURING THE SAME

CROSS-REFERENCE TO RELATED APPLICATION

[0001] The present application claims priority to Korean patent application number 10-2013-0001656 filed on Jan. 7, 2013, in the Korean Intellectual Property Office, the entire disclosure of which is incorporated by reference herein.

BACKGROUND

[0002] 1. Technical Field

[0003] Various embodiments relate generally to a semiconductor device and a method of manufacturing the same and, more particularly, to a three-dimensional semiconductor device and a method of manufacturing the same.

[0004] 2. Related Art

[0005] A non-volatile memory retains data stored therein even when not powered. Two-dimensional memory devices in which memory cells are fabricated in a single layer over a silicon substrate have reached physical limits and may no longer have increased degrees of integration. Accordingly, three-dimensional (3D) non-volatile memory devices in which memory cells are stacked in a vertical direction over a silicon substrate have been proposed.

[0006] A 3D non-volatile memory device includes interlayer insulating layers and word lines stacked alternately with each other and channel layers penetrating therethrough. Memory cells are stacked along the channel layers. In order to selectively drive particular memory cells, a pad portion is to be formed on each word line, and a contact plug is to be coupled to the pad portion.

[0007] It is difficult to form pad portions on word lines stacked on top of one another and form contact plugs so that the contact plugs are coupled to the pad portions. In addition, a punch phenomenon may occur in which a contact plug passes through a pad portion, or the contact plug and the pad portion are not coupled to each other since a pad portion is not exposed along a bottom surface of a contact hole.

SUMMARY

[0008] Various embodiments relate to a semiconductor device capable of easily forming a pad portion and a method of manufacturing the same.

[0009] A semiconductor device according to an embodiment of the present invention includes a substrate in which a cell region and a contact region are defined, a pad structure including a plurality of first conductive layers and a plurality of first insulating layers formed alternately with each other in the contact region of the substrate, wherein an end of the pad structure is patterned stepwise, portions of the first conductive layers exposed at the end of the pad structure are defined as a plurality of pad portions, and the plurality of pad portions have a greater thickness than unexposed portions of the plurality of first conductive layers.

[0010] A semiconductor device according to an embodiment of the present invention includes a substrate, a plurality of stacked structures including a plurality of conductive layers and a plurality of insulating layers formed alternately with each other on the substrate, wherein each end of the plurality of stacked structures is patterned stepwise, and at least one slit separating the plurality of stacked structures from each other, wherein portions of the plurality of conductive layers exposed at each end of the plurality of stacked structures are defined as a plurality of pad portions, and the plurality of pad portions have a greater thickness than unexposed portions of the plurality of conductive layers.

BRIEF DESCRIPTION OF THE DRAWINGS

[0011] FIG. **1**A is a perspective view illustrating the structure of a semiconductor device according to an embodiment of the present invention;

[0012] FIG. **1**B is a perspective view illustrating the structure of a semiconductor device according to another embodiment of the present invention;

[0013] FIGS. **2**A to **7**B are views illustrating a method of manufacturing a semiconductor device according to an embodiment of the present invention;

[0014] FIGS. **8**A to **8**B are views illustrating additional processes of the method of manufacturing a semiconductor device according to an embodiment of the present invention;

[0015] FIGS. **9**A to **11**B are views illustrating additional processes of the method of manufacturing a semiconductor device according to another embodiment of the present invention;

[0016] FIGS. **12**A to **12**D are perspective views illustrating a cell structure of a semiconductor device according to an embodiment of the present invention;

[0017] FIG. **13** is a block diagram illustrating the configuration of a memory system according to an embodiment of the present invention; and

[0018] FIG. **14** is a block diagram illustrating the configuration of a computing system according to an embodiment of the present invention.

DETAILED DESCRIPTION

[0019] Hereinafter, various embodiments of the present invention will be described with reference to the accompanying drawings. In the drawings, a thickness and a distance of components may be exaggerated compared to an actual physical thickness and interval for convenience of illustration. In the following description, detailed explanations of known related functions and constitutions may be omitted to avoid unnecessarily information obscuring the subject manner of the present invention. Like reference numerals refer to like elements throughout the specification and drawings.

[0020] As illustrating in FIG. **1**A, a semiconductor device may include a substrate (not illustrated), stacked structures ST, and at least one first slit SL**1**. A cell region CELL and a contact region CONTACT may be defined in the substrate. The stacked structures ST may include conductive layers **11** and **13** and insulating layers **12** and **14** that are formed alternately with each other on the substrate. The first slit SL**1** may separate neighboring stacked structures ST from each other.

[0021] An end of the stacked structure ST may be patterned stepwise. Each step of the stacked structure ST that is patterned stepwise may include at least one conductive layer **11** or **13** and at least one insulating layer **12** or **14**. As illustrated in FIG. **1**A, the insulating layer **12** or **14** may be located on a top surface of each step. Alternatively, as illustrated in FIG. **1**B, the conductive layer **11** or **13** may be located on the top surface of each step.

[0022] The stacked structure ST may include a pad structure PS located in the contact region CONTACT and a cell structure CS located in the cell region CELL. The pad structure PS and the cell structure CS may be coupled to each other.

For example, the pad structure PS may be located at either or both sides of the cell structure CS.

[0023] The pad structure PS may include first conductive layers **11** and first insulating layers **12** that are alternately formed in the contact region CONTACT of the substrate. An end of the pad structure PS may be patterned stepwise. Portions of the first conductive layers **11** that are exposed along the stepped end of the pad structure PS may be defined as pad portions PAD. The pad portions PAD may have a greater thickness than unexposed portions of the first conductive layer **11**.

[0024] In addition, the pad structure PS may further include sacrificial layers **15**. The sacrificial layers **15** may be coupled to the first conductive layers **11**. For example, the first conductive layers **11** may be stacked on side walls along the z-axis of the pad structure PS exposed through the first slit SL**1**, i.e., in side regions thereof. The sacrificial layers **15** may be stacked along the z-axis in a central region of the pad structure PS. The pad portions PAD may have a greater thickness than the sacrificial layers **15**.

[0025] The cell structure CS may include second conductive layers **13** and second insulating layers **14** that are formed alternately with each other in the cell region CELL of the substrate. The first conductive layers **11** and the second conductive layers **13** that are formed on the same level may be coupled to each other, and the first insulating layers **12** and the second insulating layers **14** that are formed on the same level may be coupled to each other. For example, the first conductive layer **11** and the second conductive layer **13** that are formed on the same level may be formed in a single layer, and the first insulating layer **12** and the second insulating layer **14** that are formed on the same level may be formed in a single layer.

[0026] The semiconductor device may further include channel layers CH that penetrate the cell structure CS and at least one second slit SL**2** that penetrates the cell structure CS.

[0027] According to the above-described structure of the semiconductor device, the pad portion PAD may have a greater thickness than other unexposed portions of the first conductive layer **11**. In addition, the pad portion PAD may have a greater thickness than the second conductive layer **13** and the sacrificial layer **15**. Therefore, the thickness of the pad portion PAD may be selectively increased without increasing the height of the stacked structure ST.

[0028] FIGS. **2**A to **7**A are perspective views, and FIGS. **2**B to **7**B are cross-sectional views taken along lines I-I' of FIGS. **2**A to **7**A. For illustration purposes, part of the stacked structure ST, especially the pad structure PS, is depicted.

[0029] As illustrated in FIGS. **2**A and **2**B, a plurality of first material layers **21** and a plurality of second material layers **22** may be formed alternately with each other. The first material layers **21** may be provided to form conductive layers, and the second material layers **22** may be provided to form insulating layers.

[0030] The first material layers **21** may be formed of materials having a high etch selectivity with respect to the second material layers **22**. For example, the first material layers **21** may include a conductive layer such as a polysilicon layer, and the second material layers **22** may include an insulating layer such as an oxide layer. In another example, the first material layers **21** may include a sacrificial layer such as a nitride layer, and the second material layers **22** may include an insulating layer such as an oxide layer.

[0031] In an embodiment of the present invention, a description will be provided for an example in which the first material layer **21** includes a sacrificial layer and the second material layer **22** includes an insulating layer.

[0032] Subsequently, ends of an intermediate resultant structure including the first and second material layers **21** and **22** may be patterned stepwise. Each step of the intermediate resultant structure that is patterned stepwise may include a single first material layer **21** and a single second material layer **22** formed on the first material layer **21**.

[0033] Though not shown in FIGS. **2**A and **2**B, processes of forming memory cells may be performed before or after stepwise-patterning the first and second material layers **21** and **22**. For example, a hole may be formed through the first and second material layers **21** and **22**, and a memory layer and the channel layer CH may be formed in the hole. The memory layer may include at least one of a charge blocking layer, a data storage layer, or a tunnel insulating layer. The data storage layer may include a floating gate, such as a polysilicon layer, which can store charge, a charge trap layer, such as a nitride layer, which can trap charge, and nanodots. Before the memory layer is formed, a sacrificial layer may be formed in the hole. In addition, the channel layer CH may have various shapes such as a straight shape, a U-shape and a W-shape. The channel layer CH may be formed in a tubular shape having an open central portion, in a pillar shape having a central portion completely filled, or a combination thereof. In another example, a gate insulating layer, the channel layer CH, and a phase-change material layer may be sequentially formed in the hole. The phase-change material layer may be formed in a tubular shape having an open central region, in a pillar shape having a central portion completely filled, or a combination thereof.

[0034] As illustrated in FIGS. **3**A and **3**B, impurities may be implanted into the intermediate resultant structure that is patterned stepwise, so that impurity regions **23** may be formed in the second material layers **22**. For example, impurities such as N type impurities, P type impurities, argon (Ar), or helium (He) may be implanted by using an ion implantation process. In addition, process conditions may be controlled so that the projected ion range (Rp) of the ion implantation process may be located in the second material layers **22**.

[0035] During an impurity ion implantation process, a mask pattern may be used. For example, a mask pattern may be formed over the first and second material layers **21** and **22** so that the mask pattern may expose side regions of the contact region CONTACT and cover a cell region and a central region of the contact region CONTACT. Subsequently, an ion implantation process may be performed using the mask pattern as a barrier.

[0036] As illustrated in FIGS. **4**A and **4**B, the first material layers **21** may be removed to form recessed regions RC. For example, after an interlayer insulating layer **24** is formed on the first and second material layers **21** and **22**, at least one first slit SL**1** may be formed through the interlayer insulating layer **24**, the first material layers **21**, and the second material layers **22**. As a result, the stacked structures ST may be separated from each other by the first slit SL**1**. Subsequently, the first material layers **21** exposed through the first slit SL**1** may be removed by being etched from side walls of the stacked structure ST exposed through the first slit SL**1**. Therefore, the first material layers **21** may be removed along the y-axis from

side regions of each stacked structure ST, while the first material layers **21** in a central region thereof may remain.

[0037] A second slit SL**2** (see FIGS. **1**A and **1**B) located in the cell region CELL may also be formed when the first slit SL**1** is formed. If the second slit SL**2** is formed in the cell region CELL, the first material layers **21** exposed through the first and second slits SL**1** and SL**2** may be removed. Therefore, the first material layers **21** may be completely removed from the cell region CELL.

[0038] As illustrated in FIGS. **5**A and **5**B, the thickness of ends of the recessed regions RC may be increased. For example, the second material layers **22** exposed by the recessed regions RC may be etched to a predetermined thickness by using a wet etch process. Since an etch rate of the impurity region **23** is higher than that of a region implanted with no impurities, an etch amount of the impurity region **23** may be greater than that of a non-implanted region. Therefore, the ends of the recessed regions RC may be extended.

[0039] As described above, in an example where a sacrificial layer is formed in a hole, the sacrificial layer exposed through the recessed regions RC may also be etched during an etch process performed to extend the ends of the recessed regions RC. In this example, a memory layer may be exposed along the recessed regions RC formed in the cell region CELL.

[0040] As illustrated in FIGS. **6**A and **6**B, memory layers, followed by conductive layers **25**, may be formed in the recessed regions RC. Each of the memory layers may include at least one of a charge blocking layer, a data storage layer, and a tunnel insulating layer.

[0041] As a result, the conductive layers **25** may be formed in which the pad portions PAD exposed at the end of the stacked structure ST may have a greater thickness than unexposed portions of the conductive layers **25**.

[0042] As illustrated in FIGS. **7**A and **7**B, contact holes may be formed through the interlayer insulating layer **24** so that the pad portions PAD may be exposed through contact holes, and conductive layers may be formed in the contact holes. As a result, contact plugs **26** may be formed such that each of the contact plugs **26** may be coupled to each of the pad portions PAD.

[0043] The contact holes may be formed at different depths depending on heights of the pad portions PAD. Conventionally, a punch phenomenon may occur due to over-etching of upper pad portions PAD, or a not-open phenomenon may occur in which lower pad portions PAD may not be exposed along bottom surfaces of the contact holes. However, according to an embodiment of the present invention, since the thickness of the pad portion PAD may be selectively increased to ensure an etch margin, the above-described phenomena may be prevented.

[0044] Although a description has been made to an example in which the contact plugs **26** are arranged in a line, the contact plugs **26** may be arranged in other ways, such as in a staggered pattern.

[0045] Various changes may be made to the above-described manufacturing processes, depending on types of the first and second material layers **21** and **22**.

[0046] For example, the first material layers **21** may include conductive layers, and the second material layers **22** may include interlayer insulating layers. According to this example, after the first slit SL**1** is formed, the second material layers **22** may be etched by using a wet etch process. Since the impurity region **23** is etched at a higher rate than a region implanted with no impurities, the second material layers **22** formed at the upper parts of the pad portions PAD may be etched to form recessed regions. Subsequently, metal layers may be formed in the recessed regions and in the first slit SL**1**, and the first material layers **21** and the metal layers may react with each other to thereby silicide the first material layers **21**. Since the pad portion PAD of the first layer **21** may contact and react with a greater portion of the metal layer through the recessed region, a silicide layer having a greater thickness than other regions may be formed. Thus, processes of forming the recessed regions RC by removing the first material layers **21** may be skipped.

[0047] Hereinafter, a description of the contents of additional processes in the same manner as the above-described manufacturing processes is omitted.

[0048] As illustrated in FIG. **8**A, before an impurity implantation process is performed, a barrier layer **27** may be formed on the entire surface of the intermediate resultant structure that is patterned stepwise. Alternatively, as illustrated in FIG. **8**B, before an impurity implantation process is performed, side walls of the first material layers **21** exposed at respective steps may be oxidized to thereby form a plurality of barrier layers **28**.

[0049] The barrier layers **27** and **28** may be formed in order to ensure an etch margin when the ends of the recessed regions RC are extended. Particularly, the barrier layers **27** and **28** may be formed to ensure the distance between stacked conductive layers (pad portions). As described above with reference to FIG. **5**A, processes of increasing the thickness of the ends of the recessed region RC may be performed to extend the ends of the recessed regions RC in a Z direction and thereby increase the thickness of the pad portions PAD. However, the recessed regions RC may also be extended in the X direction during an etch process. Conventionally, the distance between the stacked conductive layers (pad portions) may decrease, and therefore a breakdown voltage of the conductive layers **25** may be deteriorated. However, according to an embodiment of the present invention, since an etch margin is ensured by the barrier layers **27** and **28**, a sufficient distance may be ensured between the stacked conductive layers (pad portions) to prevent any deterioration.

[0050] When the barrier layers **27** and **28** are formed, the interlayer insulating layer **24** (not shown) may be formed over the barrier layers **27** and **28**. In addition, each of the barrier layers **27** and **28** may be etched to a predetermined thickness during the etch process for extending the ends of the recessed regions RC, but other portions which are not etched may remain. For example, the barrier layer **27** formed on the entire surface of the stacked structure ST or the barrier layer **28** formed on the side wall of the pad portion PAD may remain.

[0051] FIGS. **9**A to **11**A are perspective views illustrating a method of manufacturing a semiconductor device according to another embodiment of the present invention, and FIGS. **9**B to **11**B are cross-sectional views taken along lines I-I'. For illustration purposes, part of the stacked structure ST, especially part of the pad structure, is depicted. Hereinafter, a description of common contents with earlier described embodiments is omitted.

[0052] As illustrated in FIGS. **9**A and **9**B, a plurality of first material layers **31** and a plurality of second material layers **32** may be formed alternately with each other. A description will be made to an example in which the first material layer **31** includes a sacrificial layer, and the second material layer **32** includes an insulating layer.

[0053] Ends of an intermediate resultant structure including the first and second material layers **31** and **32** may be patterned stepwise. Each step of the intermediate resultant structure that is patterned stepwise may include a single first material layer **31** and a single second material layer **32** formed under the first material layer **31**.

[0054] Subsequently, a buffer layer **33** may be formed on an entire surface of the intermediate resultant structure that is patterned stepwise. The buffer layer **33** may include materials having a high etch selectivity with respect to the first and second material layers **31** and **32**. For example, the buffer layer **33** may include materials having a high etch selectivity with respect to the first material layers **31** and a higher etch rate than the second material layers **32**.

[0055] In addition, the buffer layer **33** may be formed with a sufficient thickness since the buffer layer **33** may be etched to a predetermined thickness during subsequent etch processes for extending the ends of the recessed regions RC.

[0056] As illustrated in FIGS. **10**A and **10**B, the first material layers **31** may be removed to form the recessed regions RC. After an interlayer insulating layer **34** is formed over the first and second material layers **31** and **32**, at least one first slit SL**1** may be formed through the interlayer insulating layer **34**, the first material layers **31**, and the second material layers **32**, so that separate stacked structures ST may be formed. Subsequently, the first material layers **31** exposed through the first slit SL**1** may be etched from side walls of the stacked structure ST exposed through the first slit SL**1** and thus removed. Therefore, the first material layers **31** may be removed from the side regions of each stacked structure ST, while the first material layers **31** may remain in the central region of the stacked structure ST.

[0057] As illustrated in FIGS. **11**A and **11**B, the thickness of the ends of the recessed regions RC may be increased. For example, the buffer layer **33** through the recessed regions RC may be selectively etched. An etch process may be performed under the condition that the buffer layer **33** is etched at a higher rate than the second material layers **32**. As a result, the ends of the recessed regions RC may be selectively extended.

[0058] Subsequently, conductive layers **35** may be formed in the recessed regions RC. As a result, the pad portions PAD exposed at the end of the stacked structure ST may have a greater thickness than other portions of the conductive layers **35**.

[0059] Subsequently, contact holes may be formed through the interlayer insulating layer **34** so that the pad portions PAD may be exposed through the contact holes, and conductive layers may be formed in the contact holes. As a result, each of the contact plugs **36** may be coupled to each of the pad portions PAD.

[0060] FIGS. **12**A to **12**D are perspective views illustrating a cell structure of a semiconductor device according to an embodiment of the present invention. However, for illustration purposes, an insulating layer is not depicted.

[0061] FIG. **12**A illustrates an example in which a channel layer is formed in a U-shape manner.

[0062] As illustrated in FIG. **12**A, a semiconductor device may include a pipe gate PG, word lines WL, at least one drain selection line DSL, and at least one source selection line SSL that are stacked on a substrate SUB.

[0063] The semiconductor device may further include a plurality of U-shaped channel layers CH. The channel layers CH may include a pipe channel layer P_CH that is formed in the pipe gate PG and source and drain side channel layers S_CH and D_CH that are connected to the pipe channel layer P_CH.

[0064] The source side channel layers S_CH may pass through the word lines WL and the source selection line SSL, and the drain side channel layers D_CH may pass through the word lines WL and the drain selection line DSL. In addition, the source side channel layers S_CH may be coupled to a source line SL, and the drain side channel layers D_CH may be coupled to bit lines BL.

[0065] The semiconductor device may further include memory layers M that are interposed between the channel layers CH and the word lines WL.

[0066] According to the above-described structure of the semiconductor device, a source selection transistor may be formed at an interconnection between the source side channel layer S_CH and the source selection line SSL. A source side memory cell may be formed at an interconnection between the source side channel layer S_CH and the word line WL. A pipe transistor may be formed at an interconnection between the pipe channel layer P_CH and the pipe gate PG. A drain selection transistor may be formed at an interconnection between the drain side channel layer D_CH and the drain selection line DSL. A drain side memory cell may be formed at an interconnection between the drain side channel layer D_CH and the word line WL. Therefore, at least one source selection transistor, a plurality of source side memory cells, a pipe transistor, a plurality of drain side memory cells, and at least one drain selection transistor that are coupled in series with each other may form a single string. Strings may be arranged in a U-shaped manner.

[0067] FIG. **12**B illustrates an example in which a channel layer is formed in a vertical shape manner.

[0068] As illustrated in FIG. **12**B, the semiconductor device may include at least one lower selection line LSL, the word lines WL, and at least one upper selection line USL that are subsequently stacked on the substrate SUB where a source region S is formed. The word lines WL may be formed in the shape of a plate, and at least any one of the upper or lower selection lines USL and LSL may have a linear shape.

[0069] The semiconductor device may further include the channel layers CH. The channel layers CH may protrude from the substrate SUB and pass through the lower selection line LSL, the word lines WL, and the upper selection lines USL. Top portions of the channel layers CH may be coupled to the bit lines BL, and bottom portions of the channel layers CH may be coupled to the source region S.

[0070] The semiconductor device may further include the memory layers M that are interposed between the channel layers CH and the word lines WL.

[0071] According to the above-described structure of the semiconductor device, a lower selection transistor may be formed at an intersection between the channel layer CH and the lower selection line LSL. A memory cell may be formed at an intersection between the channel layer CH and the word line WL. An upper selection transistor may be formed at an intersection between the channel layer CH and the upper selection line USL. Therefore, at least one lower selection transistor, a plurality of memory cells, and at least one upper selection transistor that are coupled in series with each other may form a single string. Strings may be arranged in a vertical manner.

[0072] FIG. **12**C illustrates an example in which strings are arranged in a vertical manner.

[0073] As illustrated in FIG. **12**C, the semiconductor device may include source layers S**1** to S**3**, at least one lower selection line LSL, word lines WL, and at least one upper selection line USL that are sequentially stacked.

[0074] The source layers S**1** to S**3** may include a first source layer S**1**, a second source layer S**2**, and a third source layer S**3**. The first source layer S**1** may be formed on the substrate SUB. The third source layer S**3** may be formed in the first source layer S**1**. The second source layer S**2** may surround the third source layer S**3** and be interposed between the first source layer S**1** and the third source layer S**3**. In addition, the third source layer S**3** may be formed through the second source layer S**2** and coupled to the first source layer S**1**. Each of the first and second source layers S**1** and S**2** may include a polysilicon layer, and the third source layer S**3** may include a metal layer such as a tungsten (W) layer.

[0075] The semiconductor device may further include the channel layers CH. The channel layers CH may protrude from a top surface of the second source layer S**2** and be formed through the lower selection line LSL, the word lines WL, and the upper selection lines USL. The channel layers CH may be connected to the second source layer S**2** in a single-body structure. In addition, top portions of the channel layers CH may be coupled to the bit lines BL.

[0076] The semiconductor device may further include the memory layers M that are interposed between the channel layers CH and the word lines WL. The memory layer M may surround outer surfaces of the channel layers CH and the second source layer S**2**.

[0077] According to the structure of the above structure, at least one lower selection transistor, memory cells, and at least one upper selection transistor that are coupled in series with each other may form a single string. Strings may be arranged in a vertical manner.

[0078] FIG. **12**D illustrates an example in which a channel layer has a vertical shape.

[0079] As illustrated in FIG. **12**D, the semiconductor device may include an interlayer insulating layer IIL, at least one lower selection line LSL, word lines WL, and at least one upper selection line USL that are sequentially stacked. The semiconductor device may further include the first source layer S**1** and the second source layer S**2**. The first source layer **51** may be formed in the interlayer insulating layer IIL, and the second source layer S**2** may be formed in the first source layer S**1**.

[0080] The semiconductor device may further include the channel layers CH that protrude from the first source layer **51** and pass through the lower selection line LSL, the word lines WL, and the upper selection lines USL. The channel layers CH may be connected to the first source layer **51** in a single-body structure. In addition, top portions of the channel layers CH may be coupled to the bit lines BL.

[0081] The semiconductor device may further include the memory layers M that are interposed between the channel layers CH and the word lines WL. The memory layers M may surround outer surfaces of the channel layers CH and the first source layer S**1**.

[0082] FIG. **12**D illustrates the first source layer S**1** that completely surrounds a bottom surface of the second source layer S**2**. However, part of the bottom surface of the second source layer S**2** may protrude and pass through the first source layer S**1**.

[0083] According to the above-described structure of the semiconductor device, at least one lower selection transistor, a plurality of memory cells, and at least one upper selection transistor that are coupled in series with each other may form a single string. Strings may be arranged in a vertical manner.

[0084] The semiconductor devices described with reference to FIGS. **12**A to **12**D may be manufactured by applying the above-described manufacturing methods. A detailed description of the manufacturing methods is omitted.

[0085] As illustrated in FIG. **13**, a memory system **100** according to an embodiment of the present invention may include a non-volatile memory device **120** and a memory controller **110**.

[0086] The non-volatile memory device **120** may have any of the above-described structures. In addition, the non-volatile memory device **120** may be a multi-chip package composed of a plurality of flash memory chips.

[0087] The memory controller **110** may be configured to control the non-volatile memory device **120**. The memory controller **110** may include SRAM **111**, a CPU **112**, a host interface **113**, an ECC **114**, and a memory interface **115**. The SRAM **111** may function as an operation memory of the CPU **112**. The CPU **112** may perform the general control operation for data exchange of the memory controller **110**. The host interface **113** may include a data exchange protocol of a host being coupled to the memory system **100**. In addition, the ECC **114** may detect and correct errors included in a data read from the non-volatile memory device **120**. The memory interface **115** may interface with the non-volatile memory device **120**. The memory controller **110** may further include ROM that stores code data to interface with the host.

[0088] The memory system **100** having the above-described configuration may be a solid state disk (SSD) or a memory card in which the memory device **120** and the memory controller **110** are combined. For example, when the memory system **100** is an SSD, the memory controller **110** may communicate with an external device (e.g., a host) through one of the interface protocols including USB, MMC, PCI-E, SATA, PATA, SCSI, ESDI, and IDE.

[0089] As illustrated in FIG. **14**, a computing system **200** according to an embodiment of the present invention may include a CPU **220**, RAM **230**, a user interface **240**, a modem **250**, and a memory system **210** that are electrically coupled to a system bus **260**. In addition, when the computing system **200** is a mobile device, a battery may be further included to apply an operating voltage to the computing system **200**. The computing system **200** may further include application chipsets, a CMOS Image Sensor (CIS), and mobile DRAM.

[0090] As described above with reference to FIG. **13**, the memory system **210** may include a non-volatile memory device **212** and a memory controller **211**.

[0091] By selectively increasing the thickness of pad portions of conductive layers, an etch margin may be ensured during a contact hole forming process for forming a contact plug. Therefore, a punch phenomenon and a not-open phenomenon may be prevented during the contact hole forming process.

What is claimed is:

1. A semiconductor device, comprising:

a substrate in which a cell region and a contact region are defined;

a pad structure including a plurality of first conductive layers and a plurality of first insulating layers formed alternately with each other in the contact region of the substrate,

wherein an end of the pad structure is patterned stepwise, portions of the first conductive layers exposed at the end of the pad structure are defined as a plurality of pad portions, and the plurality of pad portions have a greater thickness than unexposed portions of the plurality of first conductive layers.

2. The semiconductor device of claim **1**, wherein the plurality of first conductive layers are formed in a side region of the pad structure.

3. The semiconductor device of claim **2**, further comprising a plurality of sacrificial layers coupled to the plurality of first conductive layers and formed in a central region of the pad structure.

4. The semiconductor device of claim **3**, wherein the pad portions have a greater thickness than the plurality of sacrificial layers.

5. The semiconductor device of claim **1**, wherein each step of the pad structure includes one of the first conductive layers and a first insulating layer formed above the first conductive layer.

6. The semiconductor device of claim **1**, wherein each step of the pad structure includes one of the first conductive layers and a first insulating layer formed under the first conductive layer.

7. The semiconductor device of claim **1**, further comprising a plurality of barrier layers formed on side walls of the plurality of pad portions.

8. The semiconductor device of claim **1**, further comprising a buffer layer formed on an entire surface of the pad structure.

9. The semiconductor device of claim **1**, further comprising a barrier layer formed on an entire surface of the pad structure.

10. The semiconductor device of claim **1**, further comprising a plurality of contact plugs, wherein each of the plurality of contact plugs is coupled to each of the pad portions.

11. The semiconductor device of claim **1**, further comprising:

a cell structure coupled to the pad structure and including a plurality of second conductive layers and a plurality of second insulating layers formed alternately with each other in the cell region of the substrate; and

a plurality of channel layers penetrating the cell structure.

12. The semiconductor device of claim **10**, wherein the plurality of channel layers are formed in a U-shape or vertical shape manner.

13. The semiconductor device of claim **11**, wherein the first and second conductive layers formed on the same level are coupled to each other, and the first and second insulating layers formed on the same level are coupled to each other.

14. A semiconductor device, comprising:

a substrate;

a plurality of stacked structures including a plurality of conductive layers and a plurality of insulating layers formed alternately with each other on the substrate, wherein each end of the plurality of stacked structures is patterned stepwise; and

at least one slit separating the plurality of stacked structures from each other,

wherein portions of the plurality of conductive layers exposed at each end of the plurality of stacked structures are defined as a plurality of pad portions, and the plurality of pad portions have a greater thickness than unexposed portions of the plurality of conductive layers.

15. The semiconductor device of claim **14**, wherein the plurality of conductive layers are formed in a side region of the stacked structure.

16. The semiconductor device of claim **15**, wherein each of the stacked structures comprises a plurality of sacrificial layers coupled to the plurality of conductive layers and formed in a central region of the stacked structure.

17. The semiconductor device of claim **16**, wherein the pad portions have a greater thickness than the plurality of sacrificial layers.

18. The semiconductor device of claim **14**, further comprising a plurality of barrier layers formed on side walls of the plurality of pad portions.

19. The semiconductor device of claim **14**, further comprising a buffer layer formed on an entire surface of the stacked structure.

20. The semiconductor device of claim **14**, further comprising a barrier layer formed on an entire surface of the stacked structure.

* * * * *