US 20150255385A1

(19) United States

(12) Patent Application Publication

LEE et al.

(10) Pub. No.: US 2015/0255385 A1

(43) Pub. Date: Sep. 10, 2015

(54) **SEMICONDUCTOR DEVICE AND METHOD OF FABRICATING THE SAME**

(71) Applicant: **SK hynix Inc.**, Gyeonggi-do (KR)

(72) Inventors: **Ki Hong LEE**, Gyeonggi-do (KR); **Seung Ho PYI**, Gyeonggi-do (KR); **Seok Min JEON**, Gyeonggi-do (KR)

(21) Appl. No.: **14/465,573**

(22) Filed: **Aug. 21, 2014**

(30) **Foreign Application Priority Data**

Mar. 6, 2014 (KR) 10-2014-0026639

Publication Classification

(51) **Int. Cl.**

H01L 23/528 (2006.01)
H01L 23/532 (2006.01)
H01L 23/522 (2006.01)

(52) **U.S. Cl.**

CPC ***H01L 23/528*** (2013.01); ***H01L 23/5226*** (2013.01); ***H01L 23/53295*** (2013.01)

(57) **ABSTRACT**

A semiconductor device and a method of fabricating the same are provided. The semiconductor device includes insulating layers stacked in the shape of stairs, and conductive layers alternately stacked with the insulating layers, wherein the conductive layers each include a first region interposed between upper and lower insulating layers thereof, among the insulating layers, and a second region which extends from the first region and protrudes between the upper and lower insulating layers, and wherein a protruding part formed on a sidewall or an upper surface of the second region.

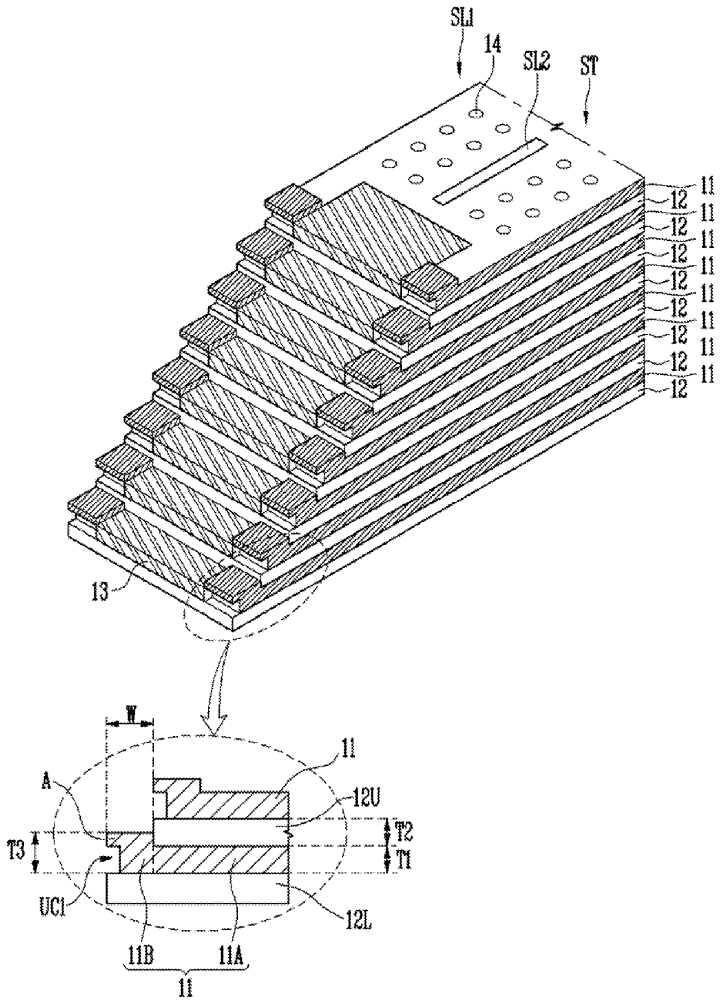

FIG. 1A

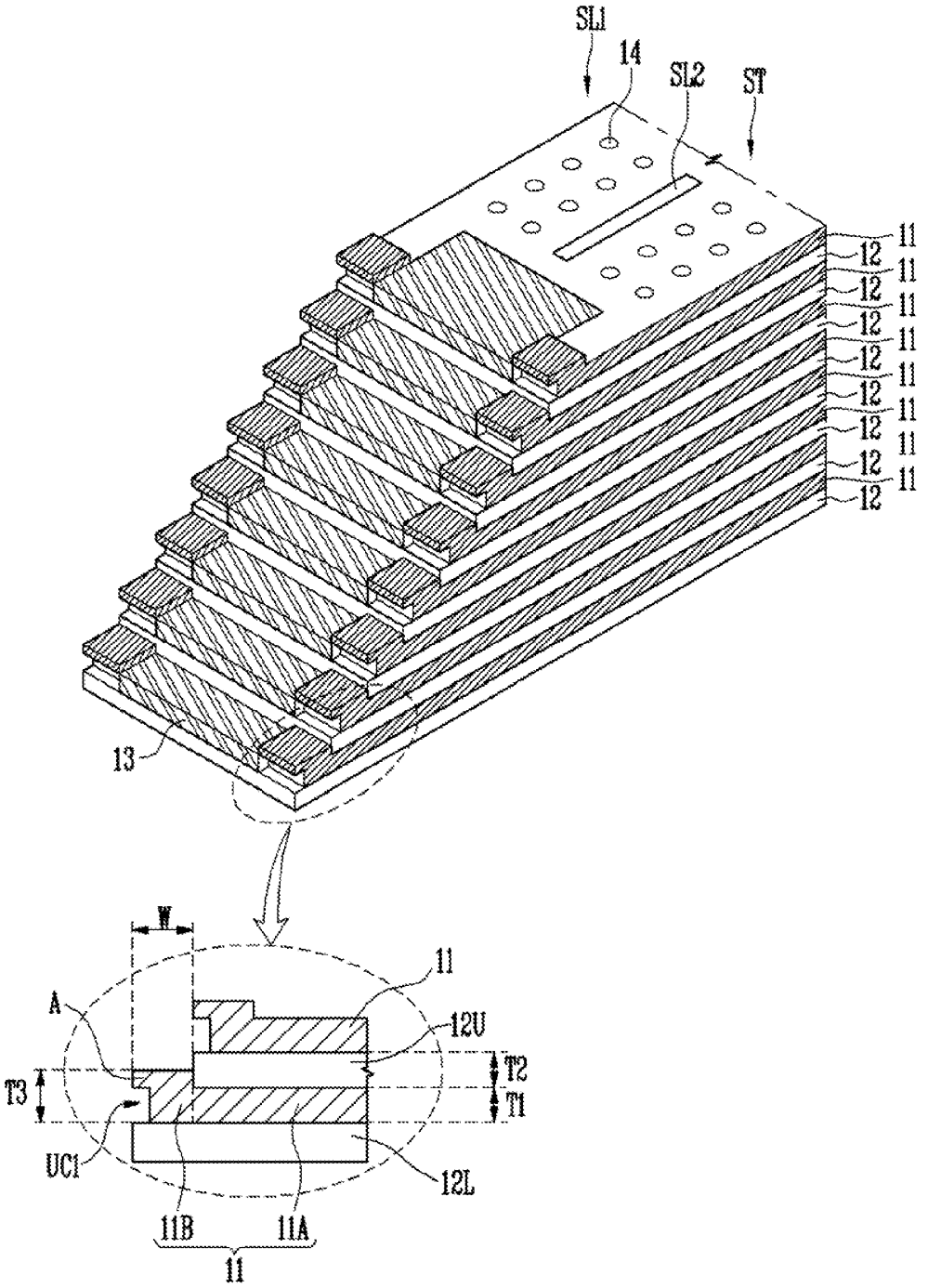

FIG. 1B

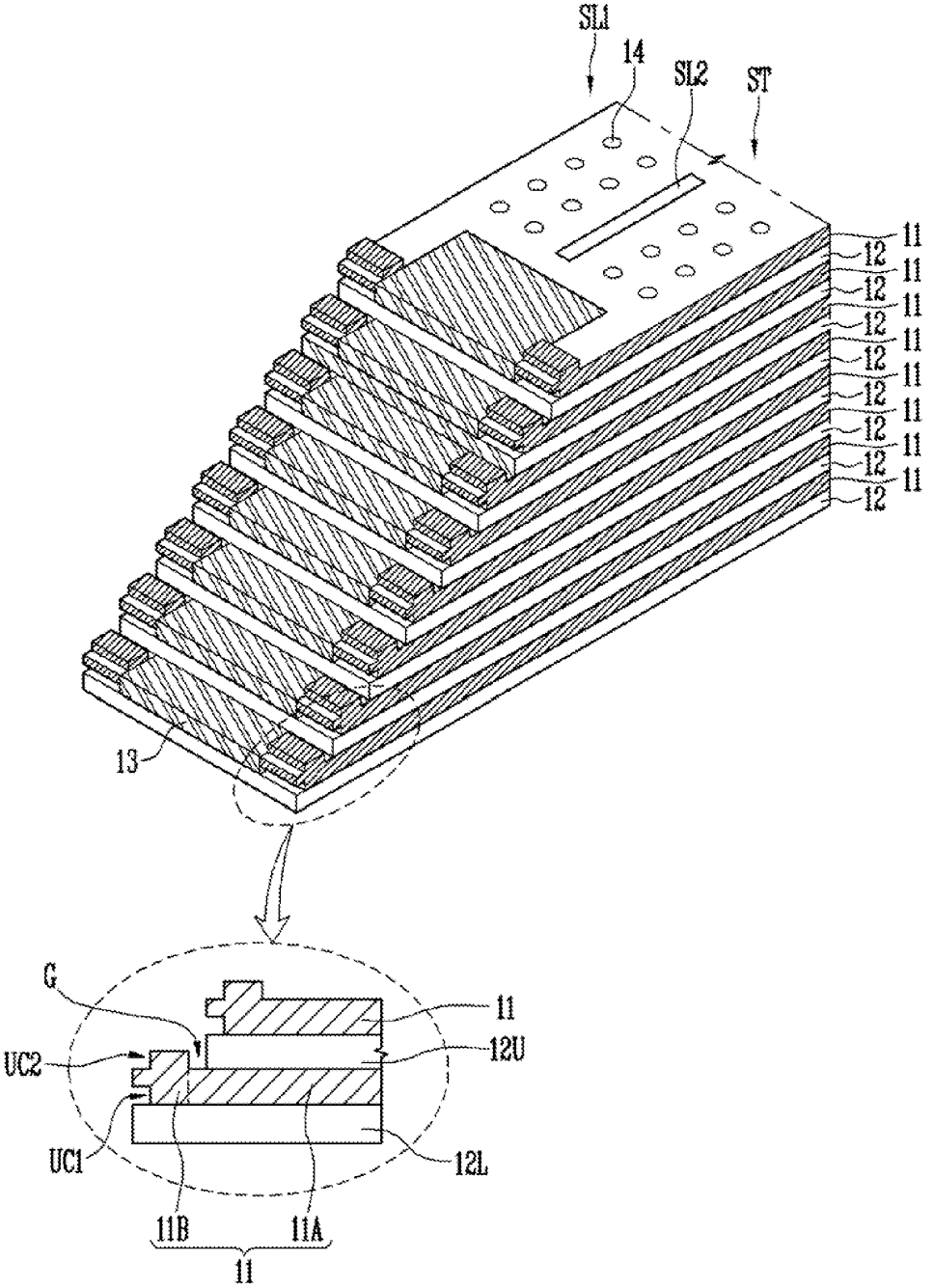

FIG. 1C

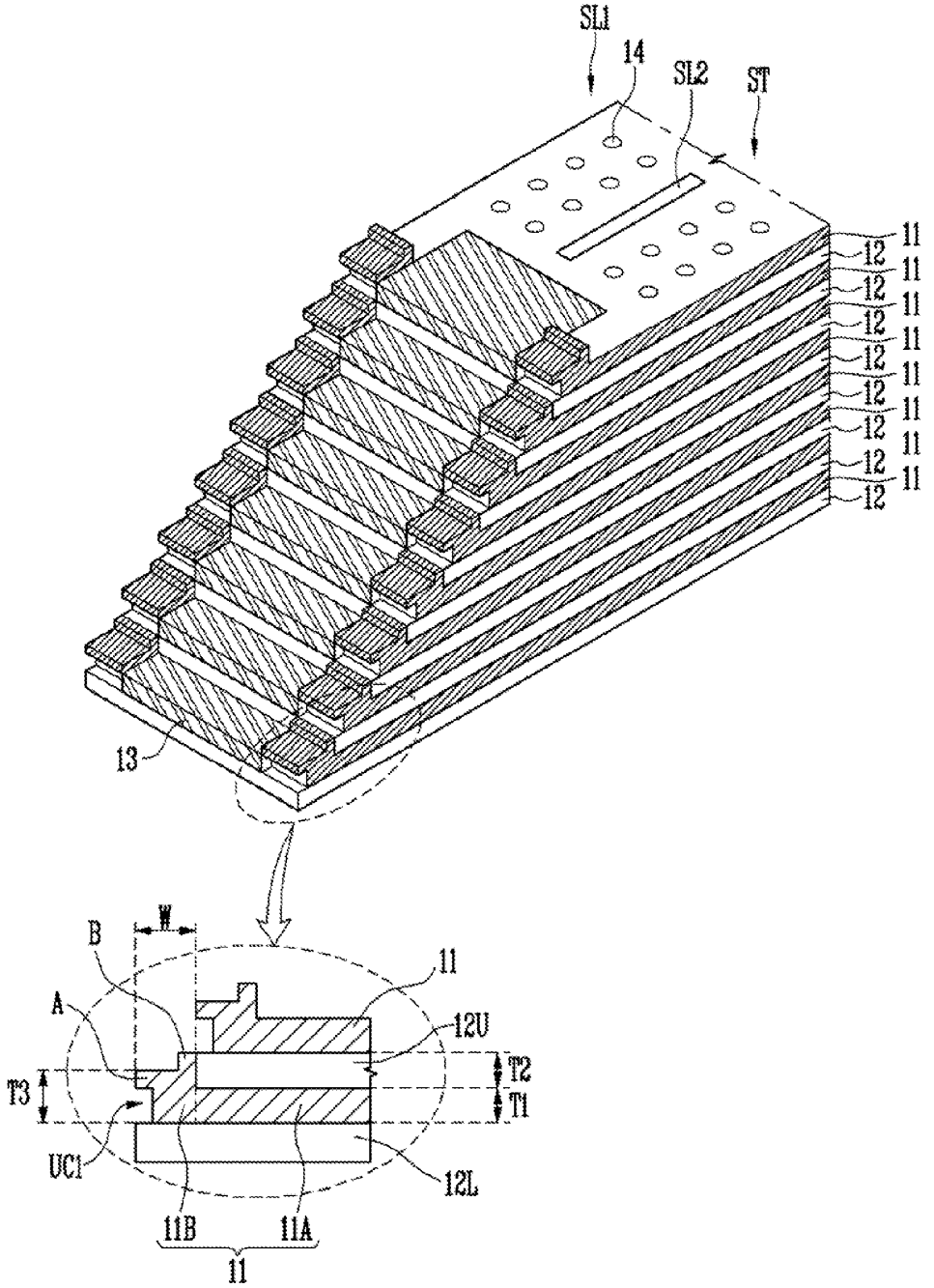

FIG. 1D

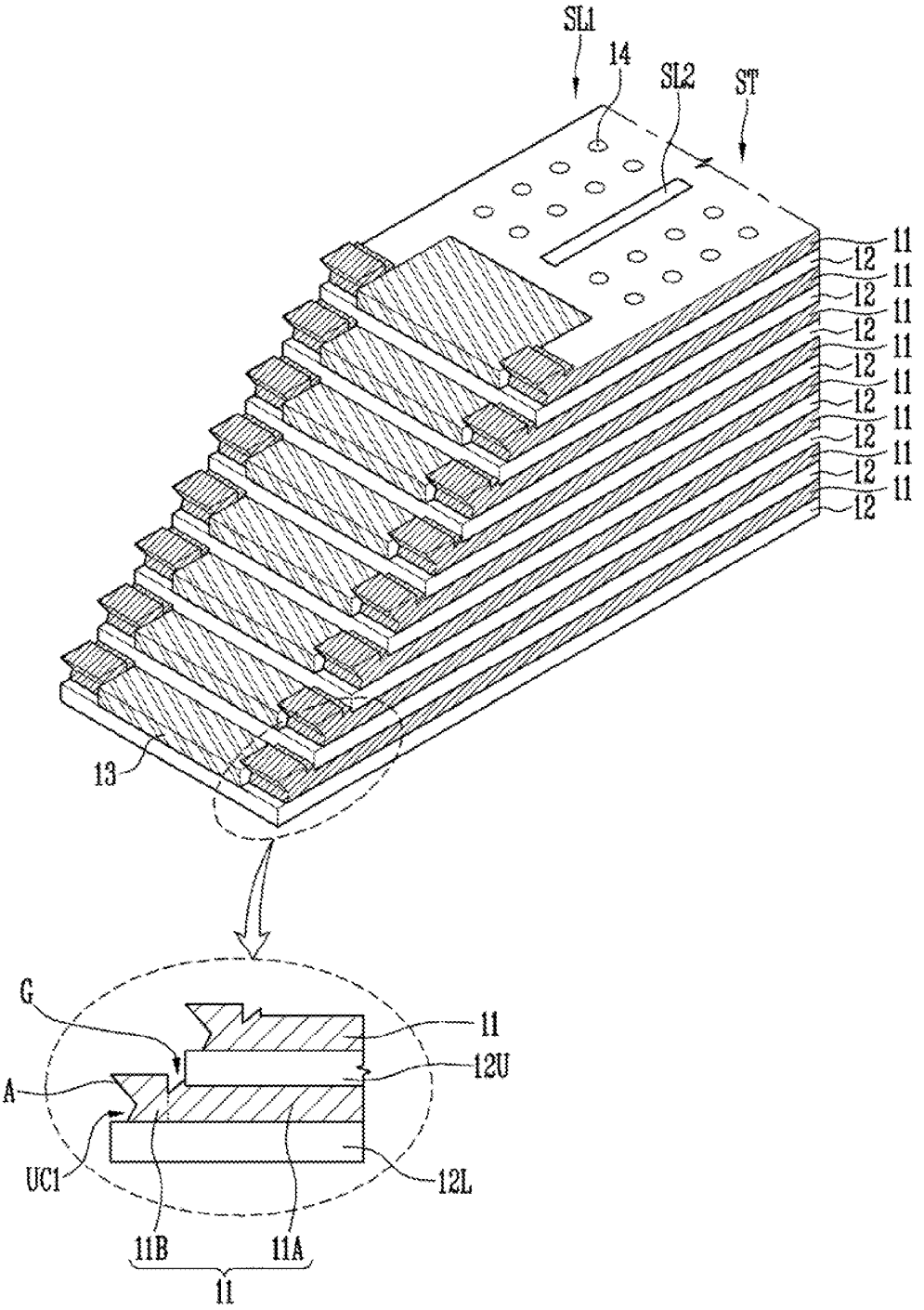

FIG. 2A

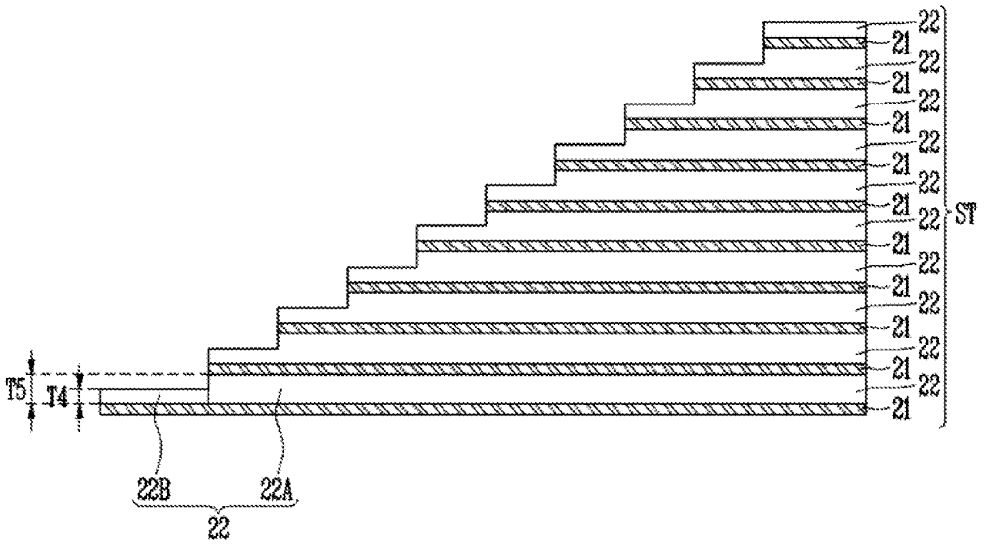

FIG. 2B

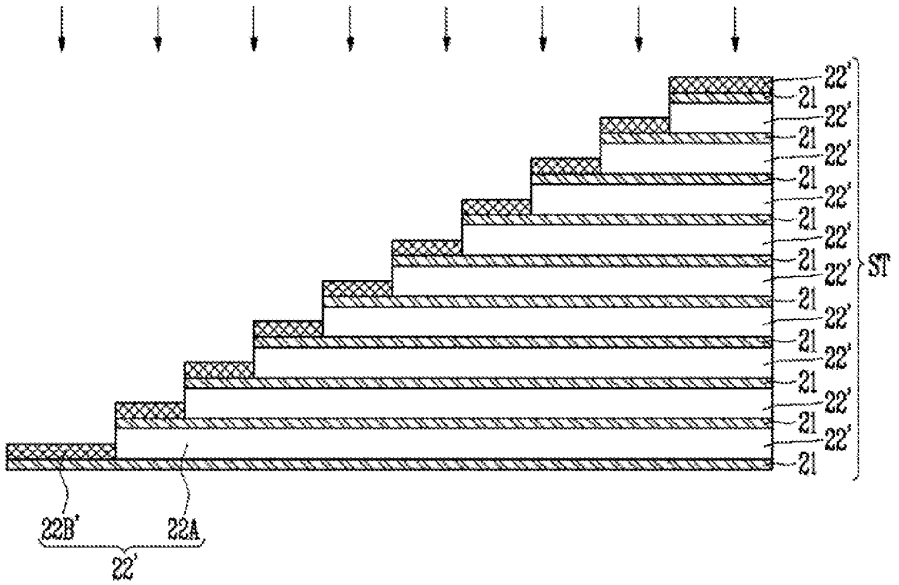

FIG. 2C

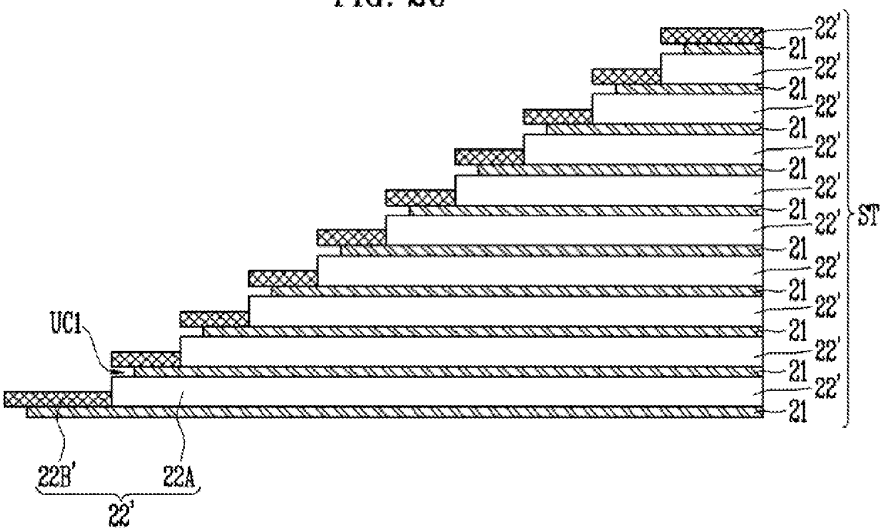

FIG. 2D

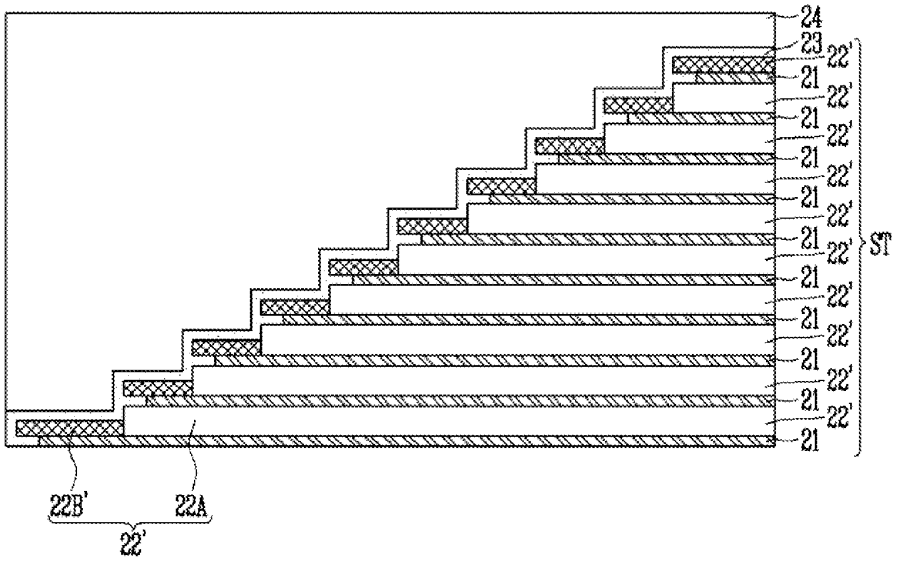

FIG. 2E

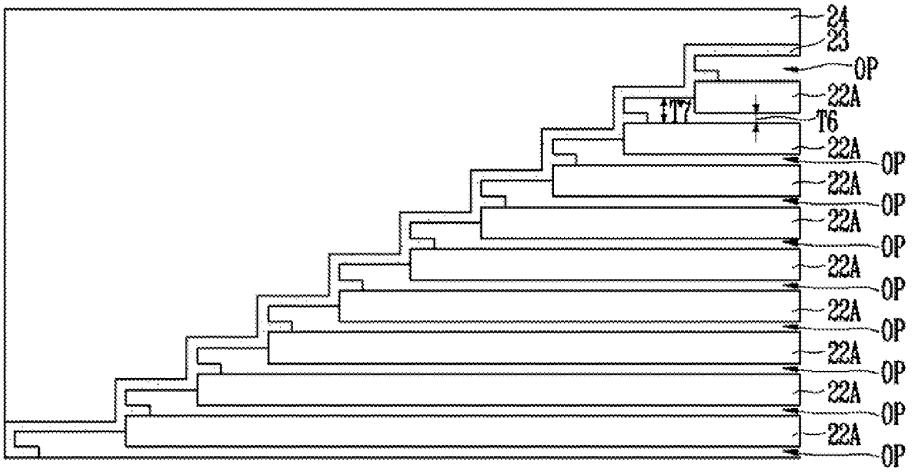
24
23
OP
22A
T7
T6
22A
OP
22A
OP
22A
OP
22A
OP
22A
OP
22A
OP
22A
OP
22A
OP
22A
OP

FIG. 2F

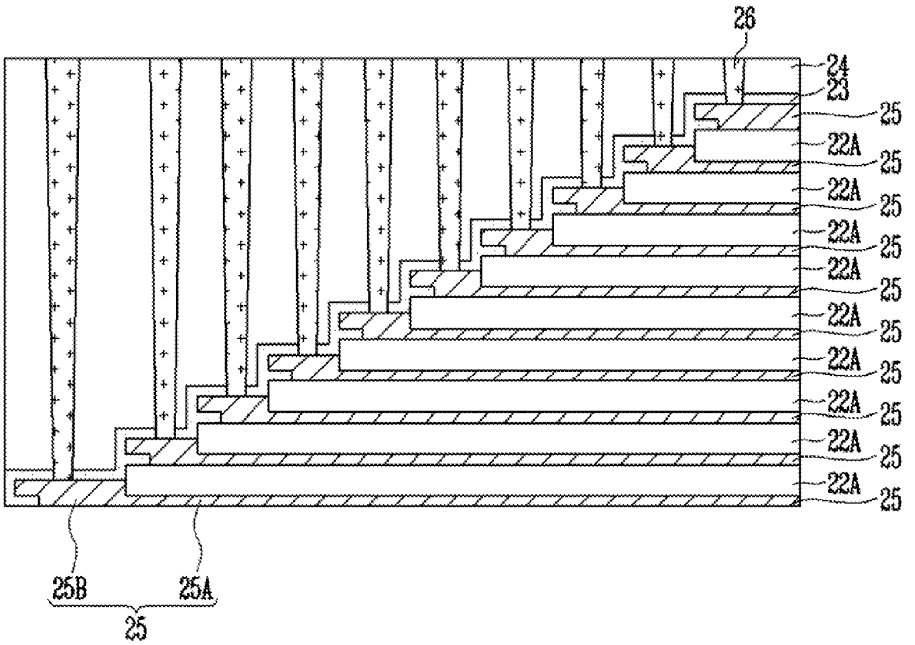
26
24
23
25
22A
25
22A
25
22A
25
22A
25
22A
25
22A
25
22A
25
22A
25
22A
25
22A
25
25B
25A
25

FIG. 3A

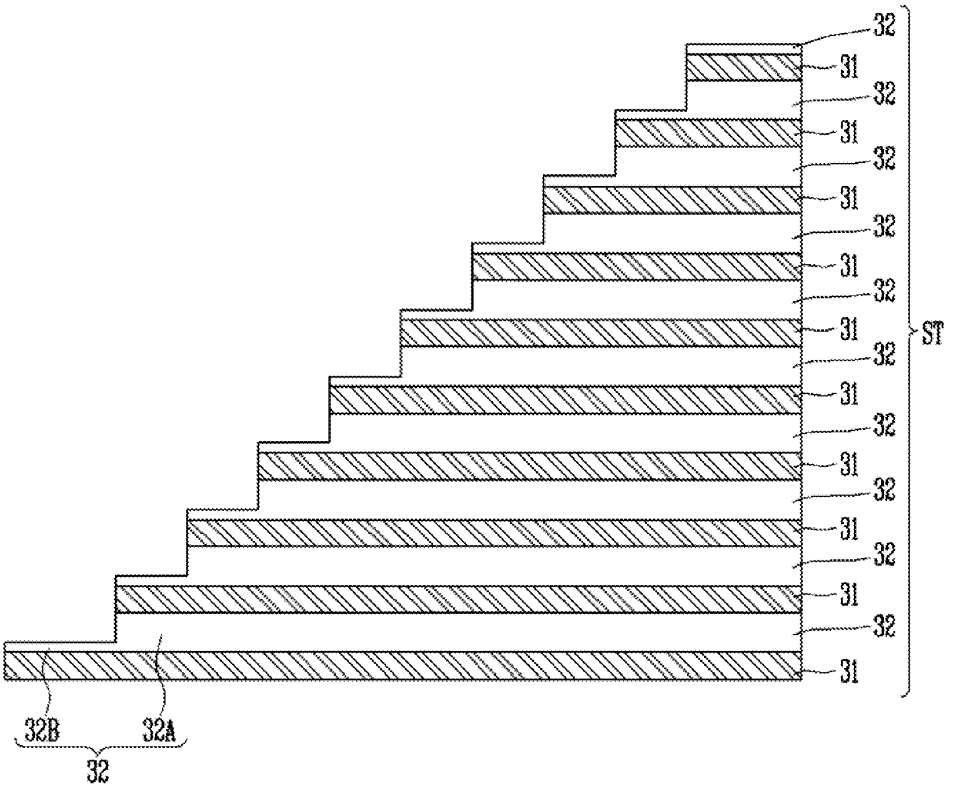
32
31
32
31
32
31
32
31
32
31
32
31
32
31
32
31
32
31
32
31
ST
32B
32A
32

FIG. 3B

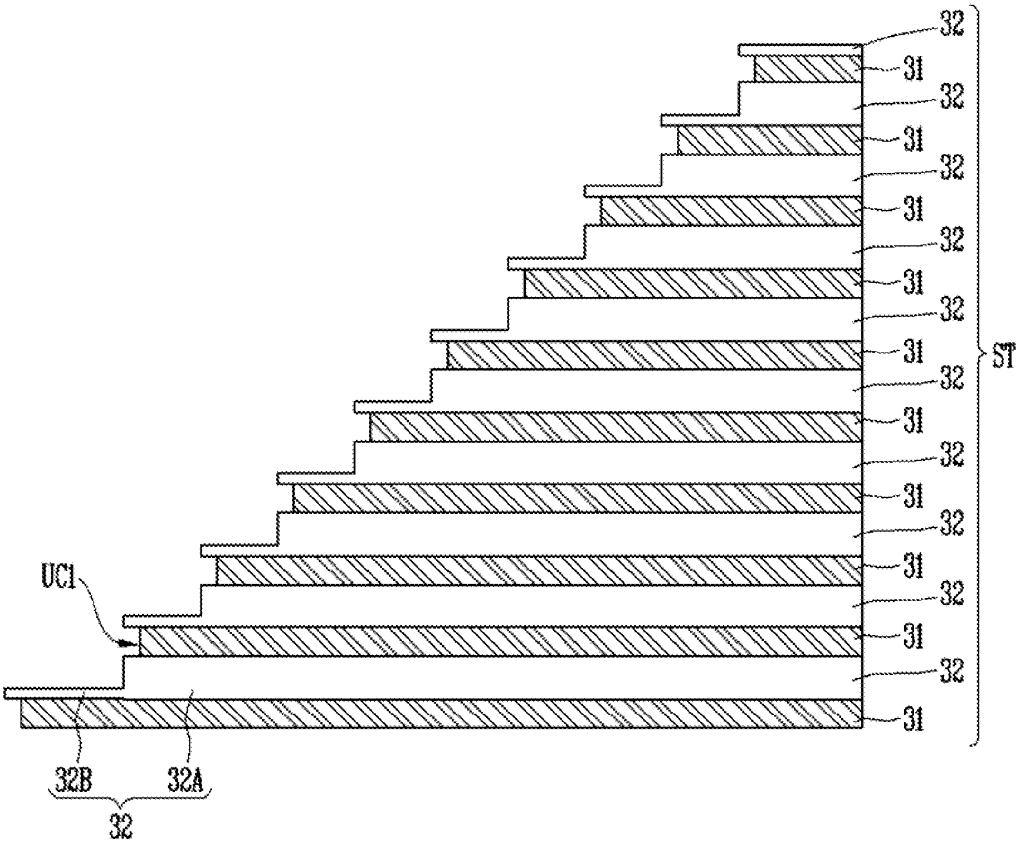
32
31
32
31
32
31
32
31
32
31
32
31
32
31
32
31
32
31
32
31
32
31
32
31
32
31
ST
UC1
32B
32A
32

FIG. 3C

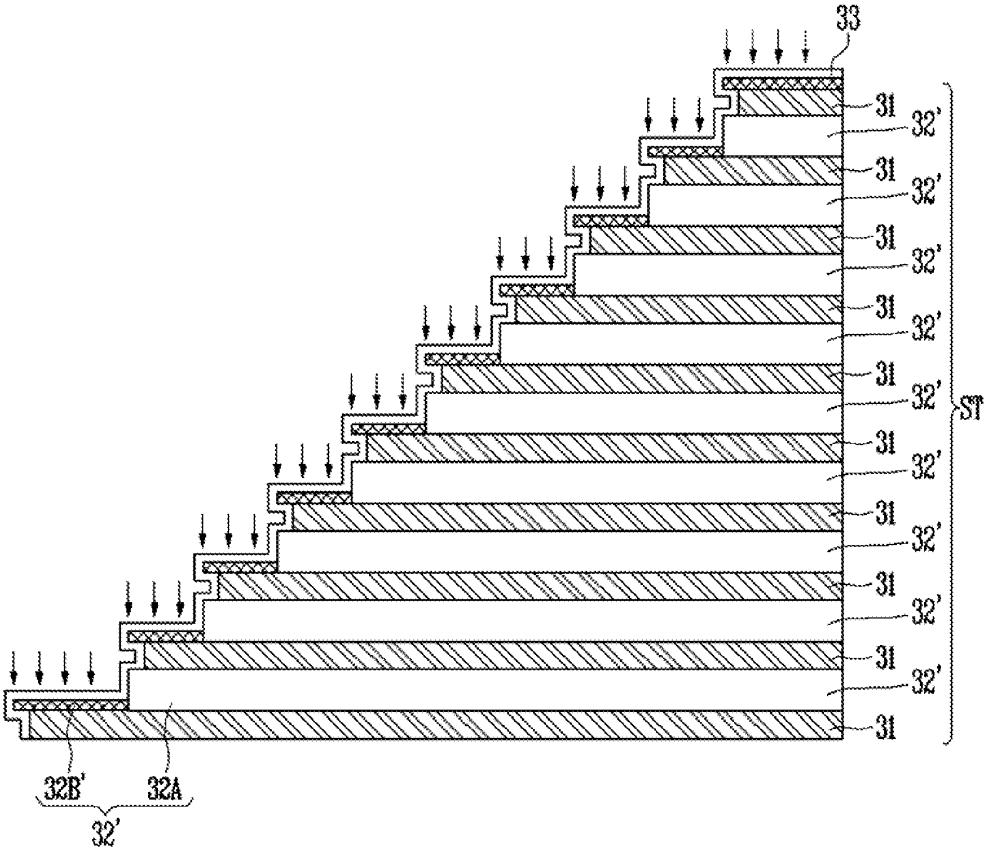

FIG. 3D

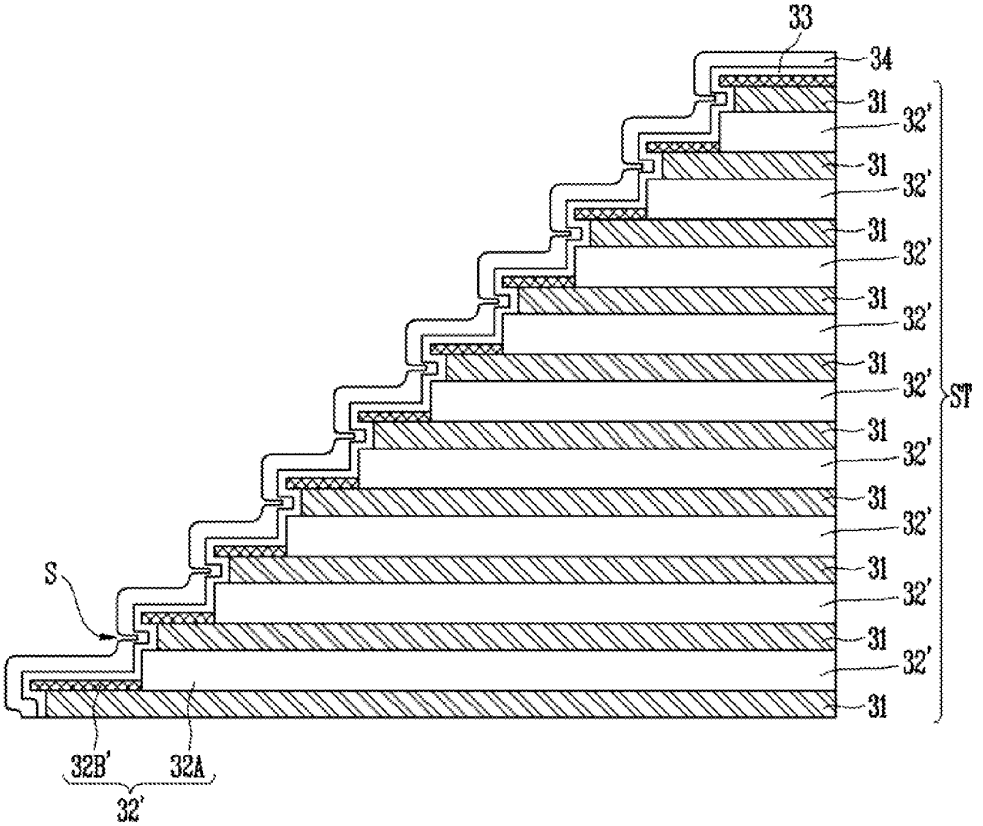

FIG. 3E

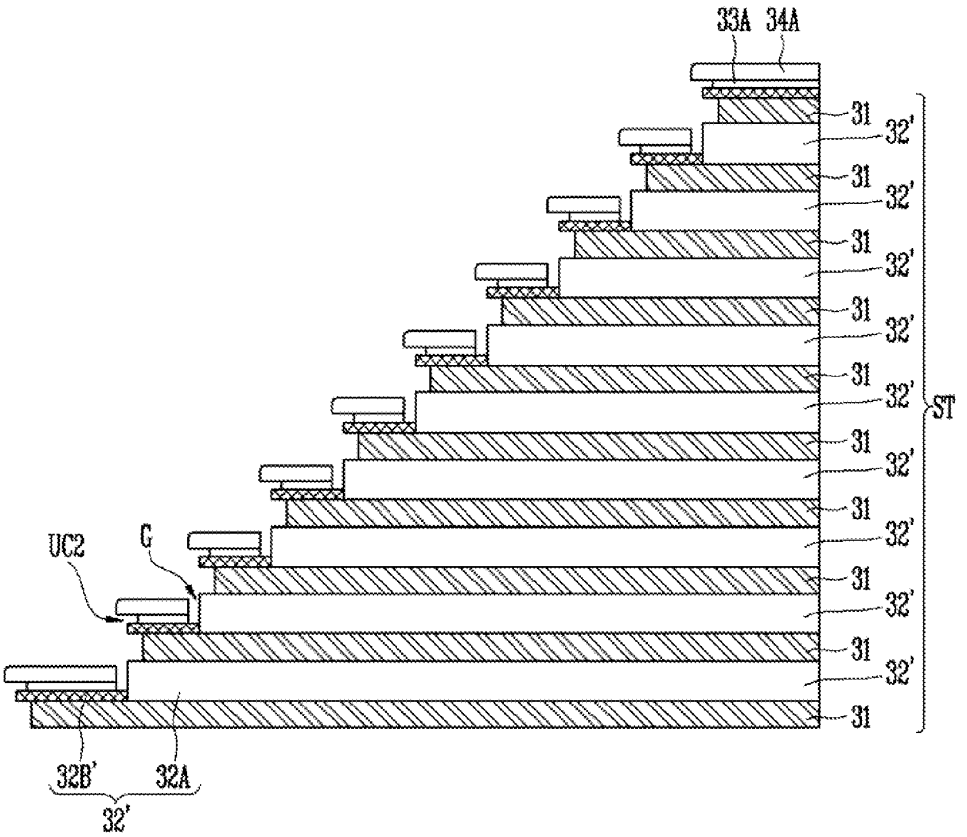

FIG. 3F

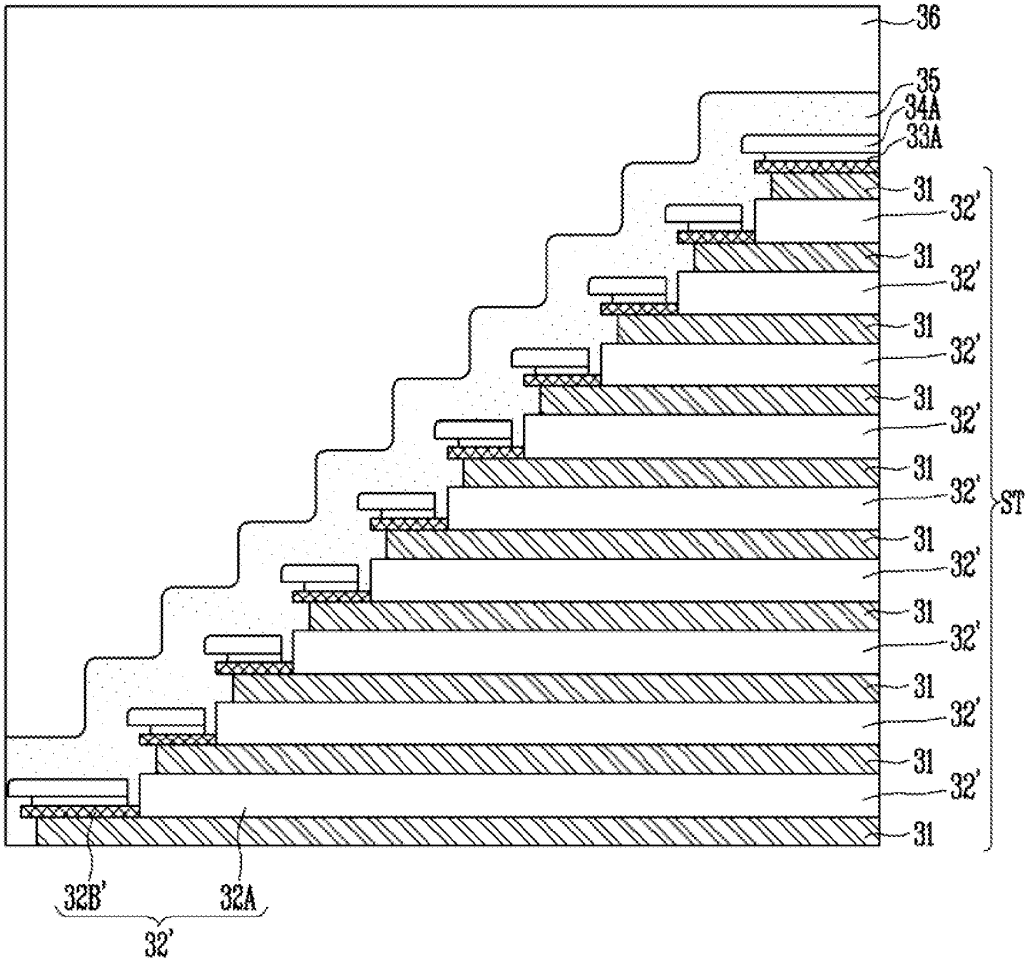

FIG. 3G

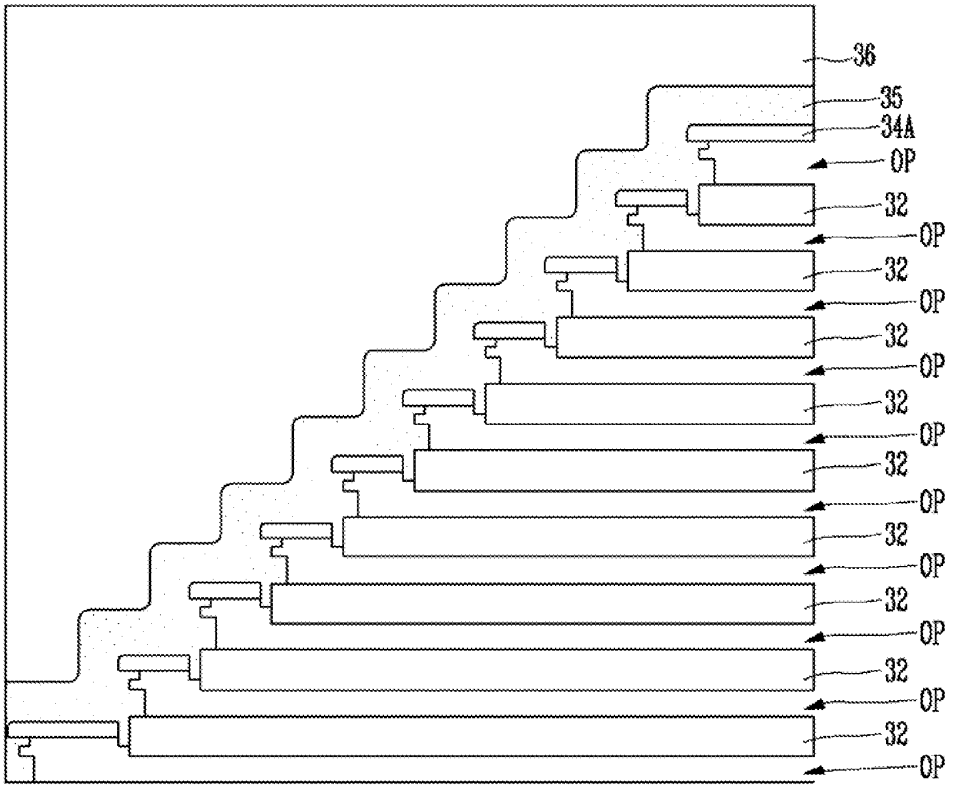

FIG. 3H

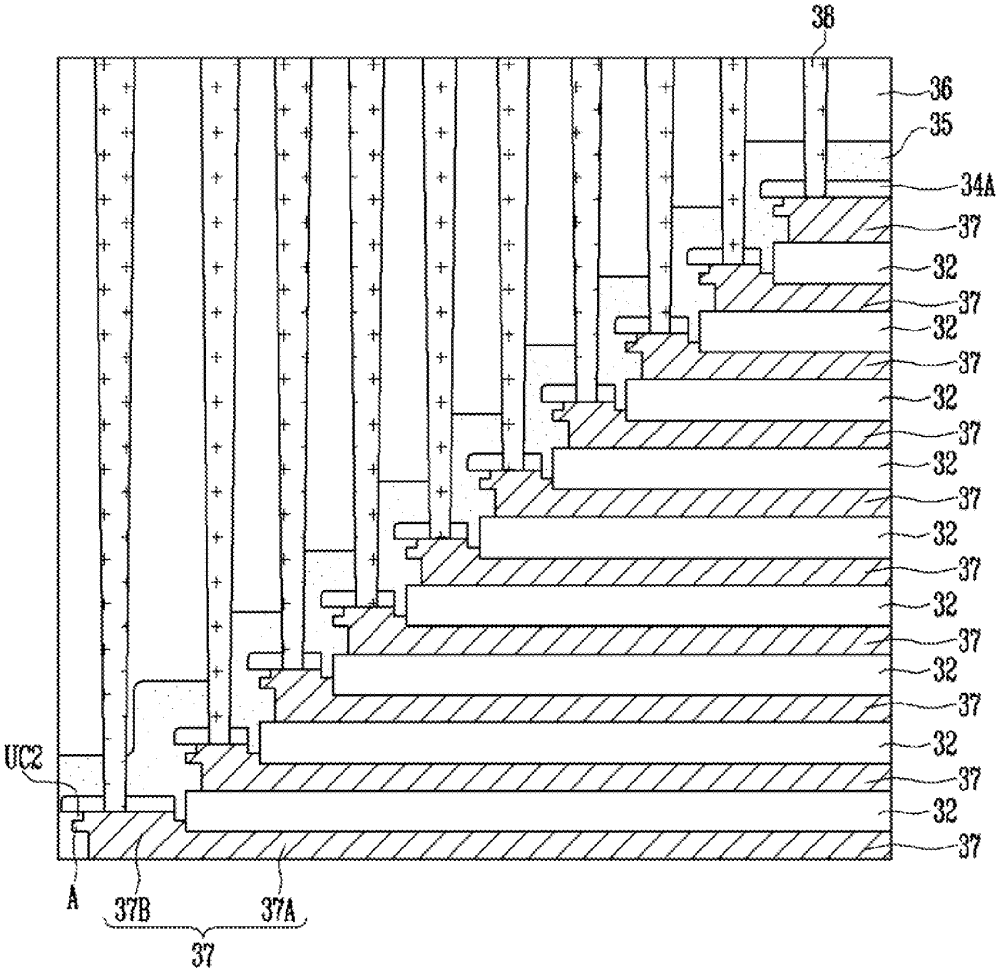
38
36
35
34A
37
32
37
32
37
32
37
32
37
32
37
32
37
32
37
32
37
32
37
UC2
A
37B
37A
37

FIG. 4A

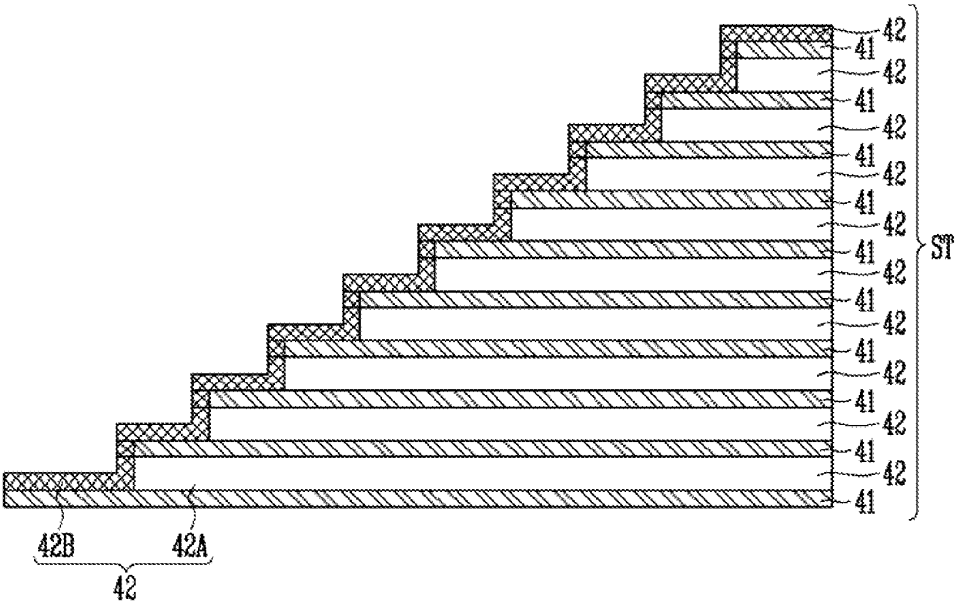

FIG. 4B

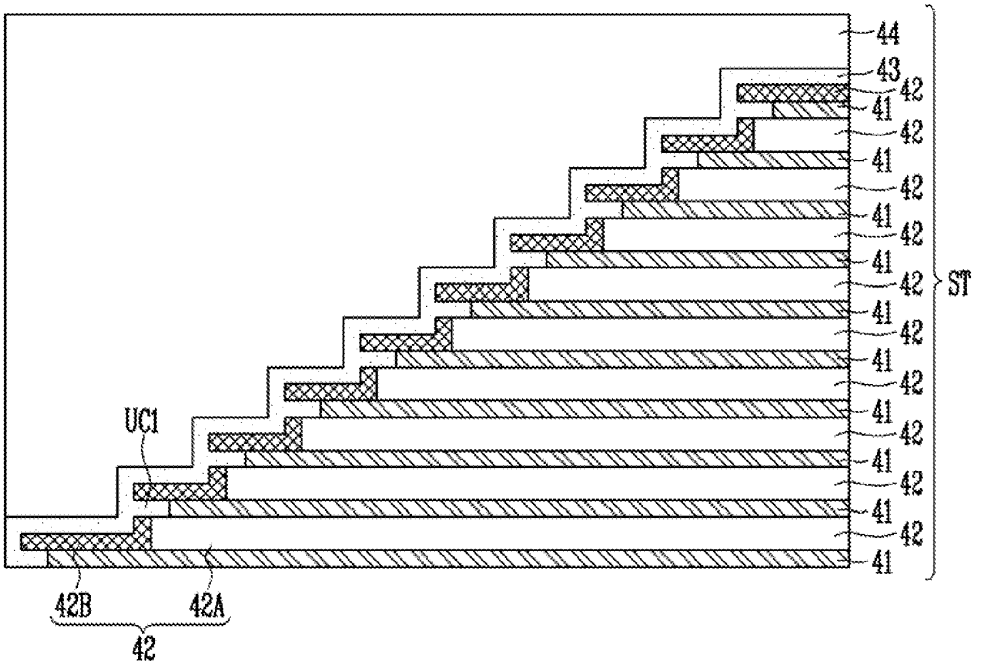

FIG. 4C

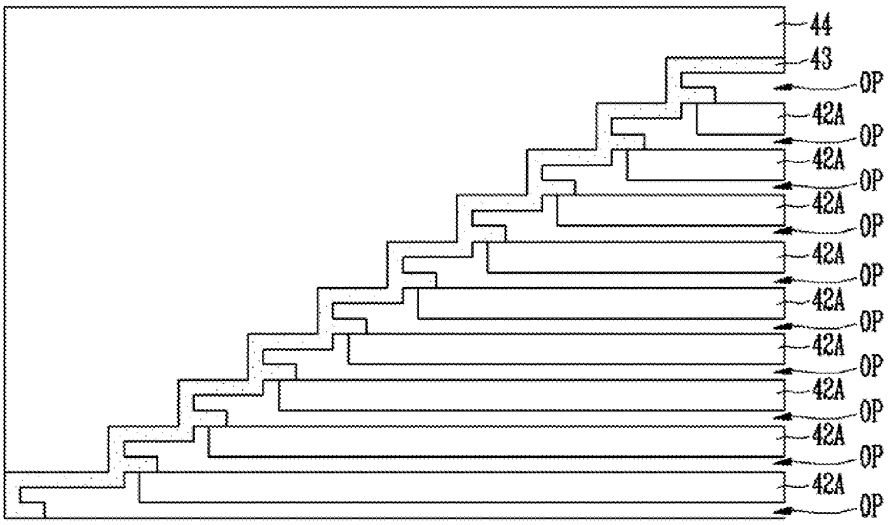
44
43
OP
42A
OP
42A
OP
42A
OP
42A
OP
42A
OP
42A
OP
42A
OP
42A
OP
42A
OP
42A
OP

FIG. 4D

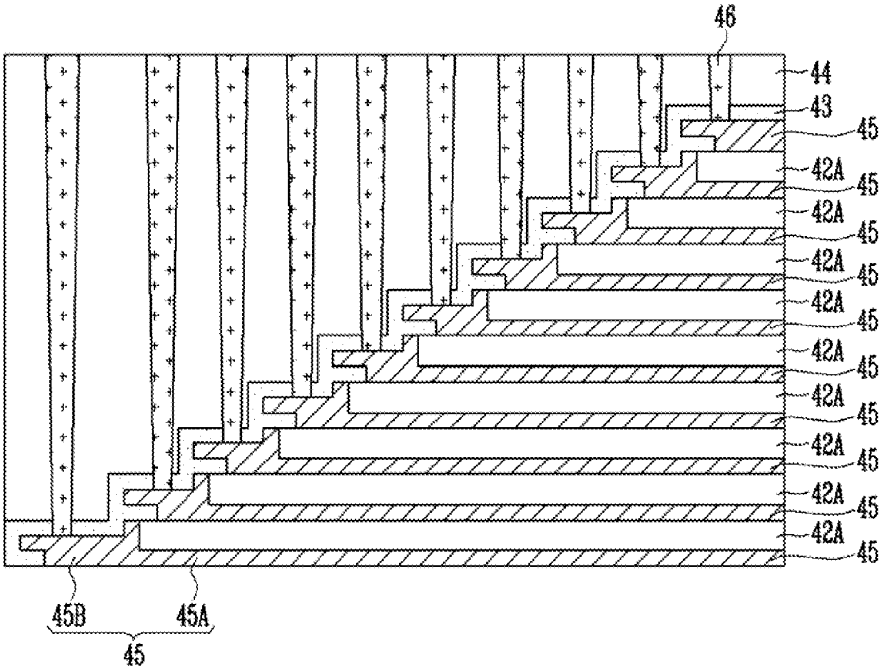
46
44
43
45
42A
45
42A
45
42A
45
42A
45
42A
45
42A
45
42A
45
42A
45
42A
45
42A
45
45B
45A
45

FIG. 5A

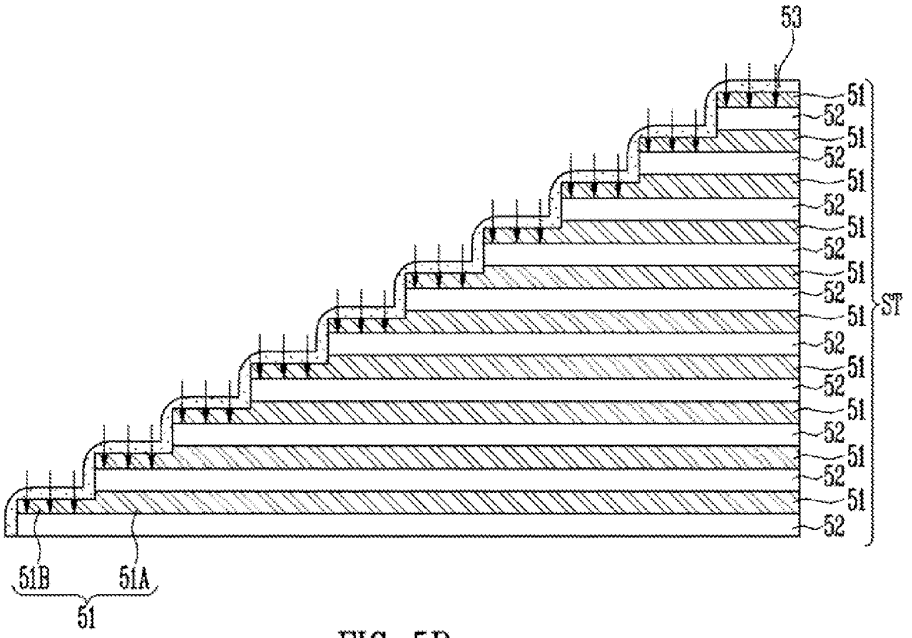

FIG. 5B

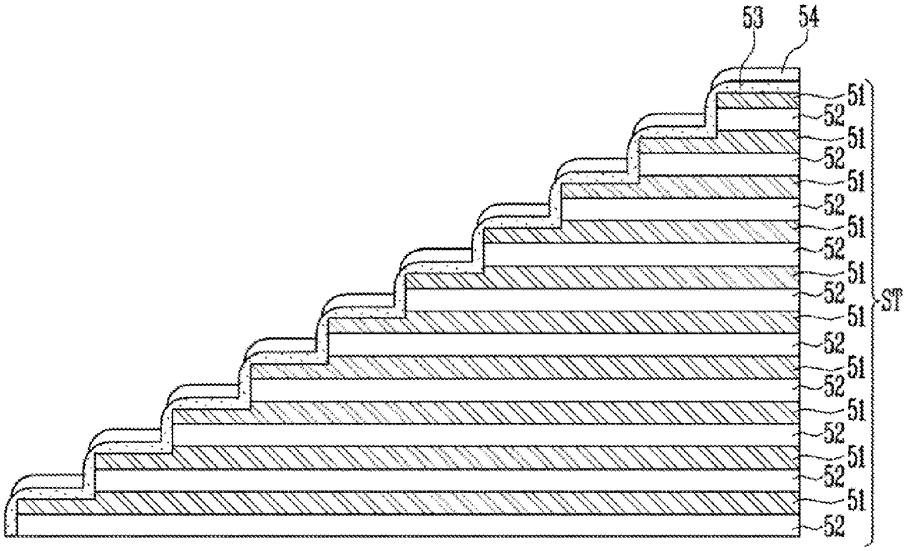

FIG. 5C

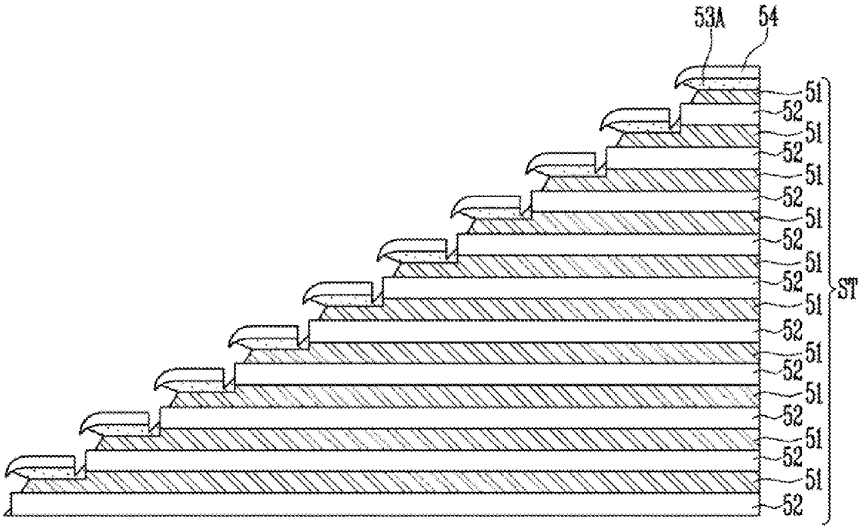

FIG. 5D

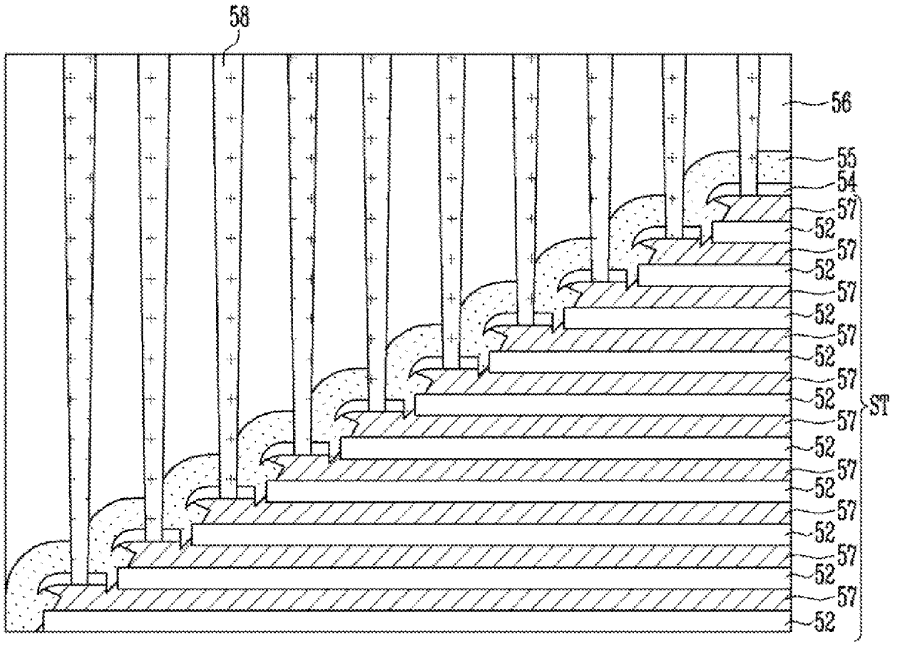

FIG. 6

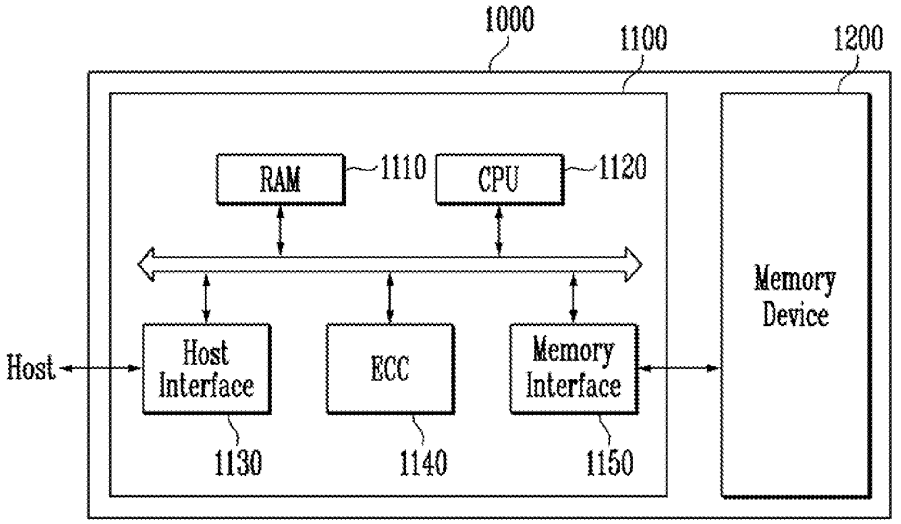
1000
1100
1200
RAM
1110
CPU
1120
Memory Device
Host
Host Interface
ECC
Memory Interface
1130
1140
1150

FIG. 7

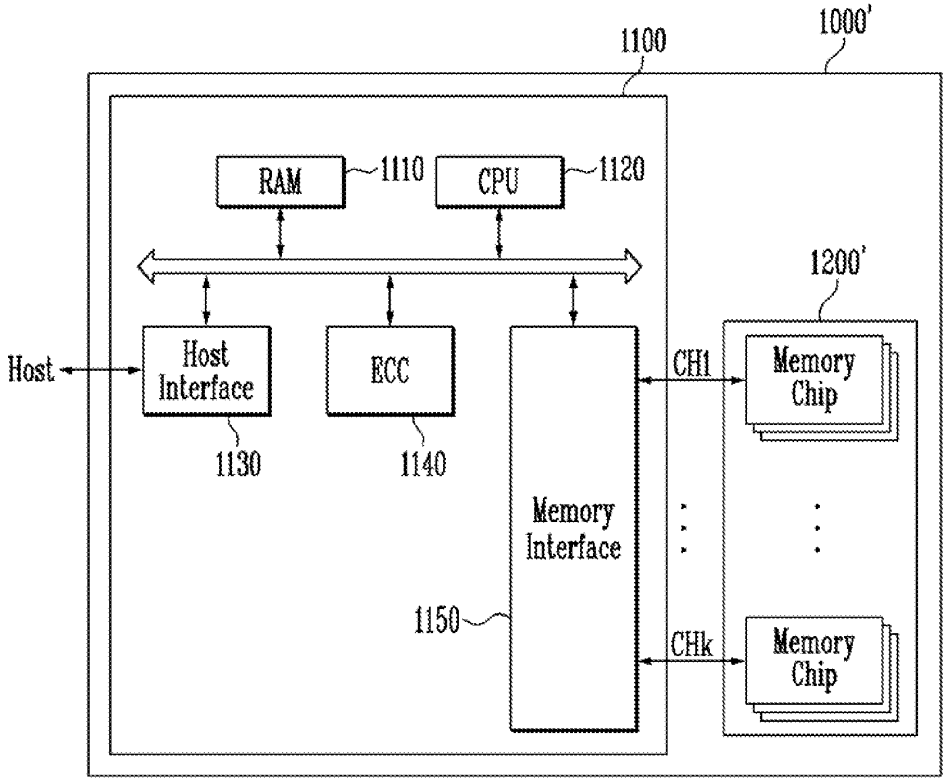
1000'
1100
RAM
1110
CPU
1120
1200'
Host
Host Interface
ECC
CH1
Memory Chip
1130
1140
Memory Interface
1150
CHk
Memory Chip

FIG. 8

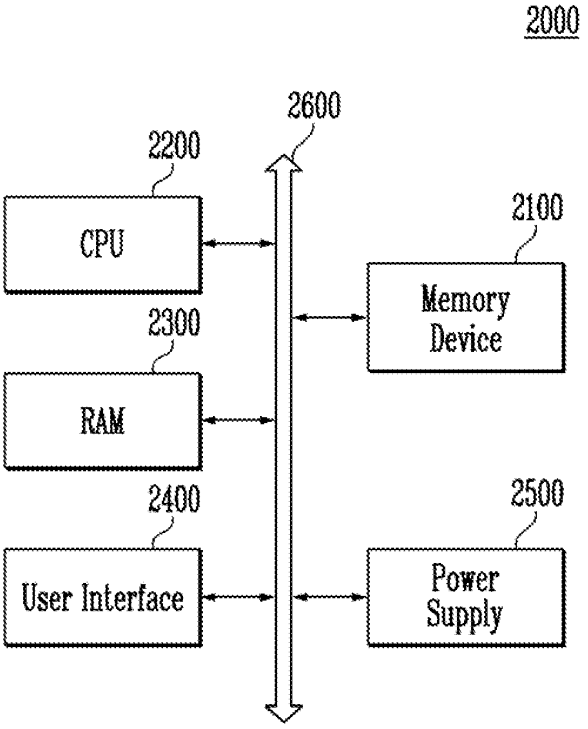
2000
2600
2200
CPU
2100
Memory Device
2300
RAM
2400
User Interface
2500
Power Supply

FIG. 9

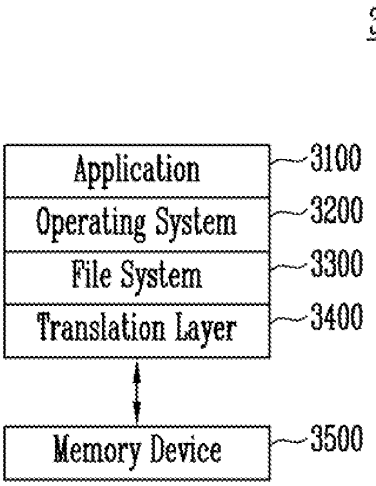
3000
Application
3100
Operating System
3200
File System
3300
Translation Layer
3400
Memory Device
3500

SEMICONDUCTOR DEVICE AND METHOD OF FABRICATING THE SAME

CROSS-REFERENCE TO RELATED APPLICATIONS

[0001] The present application claims priority to Korean patent application number 10-2014-0026639 filed on Mar. 6, 2014, the entire disclosure of which is incorporated herein in its entirety by reference.

BACKGROUND

[0002] 1. Field of Invention

[0003] Various exemplary embodiments of the present invention relate to a semiconductor device and a method of fabricating the same, and more particularly, to a semiconductor device having a 3-dimensional structure and a method of fabricating the same.

[0004] 2. Description of Related Art

[0005] Nonvolatile memory devices are memory devices that retain stored data even when their power supplies are interrupted. Since a 2-dimensional nonvolatile memory device configured to form a memory cell in a single-layer on a silicon substrate has reached a limit in enhancing its degree of integration, a 3-dimensional nonvolatile memory device configured to vertically stack memory cells on the silicon substrate has been proposed.

[0006] The 3-dimensional nonvolatile memory device includes interlayer insulating layers and word lines, which are alternately stacked, and channel layers passing therethrough, and memory cells that are stacked along the channel layers. Further, contact plugs are formed in contact with the stacked word lines, respectively, to selectively drive the memory cells.

[0007] However, because contact plugs having various depths have to be formed in order to implement this structure, there is a high degree of difficulty in manufacturing such semiconductor devices. Further, it is likely to cause a bridge where the contact plugs pass through the word lines.

SUMMARY

[0008] The present invention is directed to a stable semiconductor device and a simplified method of fabricating the same.

[0009] One aspect of the present invention provides a semiconductor device including insulating layers stacked in the shape of stairs, and conductive layers alternately stacked with the insulating layers, wherein the conductive layers each include a first region interposed between upper and lower insulating layers thereof, and a second region which extends from the first region and protrudes between the upper and lower insulating layers, and wherein a protruding part is formed on a sidewall or an upper surface of the second region.

[0010] Another aspect of the present invention provides a semiconductor device including insulating layers stacked in the shape of stairs, and conductive layers alternately stacked with the insulating layers wherein the conductive layers each include a pad part protruding between upper and lower insulating layers thereof, among the insulating layers, in the shape of a bird's beak.

[0011] Still another aspect of the present invention provides a method of fabricating a semiconductor device including forming a stacked structure including first and second material layers alternately stacked in the shape of stairs, wherein second material layers each include a first region interposed between upper and lower first material layers thereof, and a second region which extends from the first region and covers the lower first material layer, doping impurities into second regions of the second material layers, forming first undercuts under the second material layers by partially removing the first material layers, forming opening parts by removing the first material layers and the second regions of the second material layers, wherein the opening parts have a greater thickness in the second regions than in regions of the first material layers, and forming conductive layers in the opening parts.

[0012] Still another aspect of the present invention provides a method of fabricating a semiconductor device including forming a stacked structure including first and second material layers alternately stacked in the shape of stairs, wherein first material layers each include a first region interposed between upper and lower second material layers thereof, and a second region which extends from the first region and covers the lower second material layer, forming insulating patterns over the second region of the first material layers, forming first undercuts under the insulating patterns by partially etching the second region of the first material layers using the insulating patterns as an etch barrier, forming opening parts by removing the first material layers, and forming conductive layers in the opening parts.

BRIEF DESCRIPTION OF THE DRAWINGS

[0013] The above and other features and advantages of the present invention will become more apparent to those of ordinary skill in the art by describing in detail exemplary embodiments with reference to the attached drawings in which:

[0014] FIGS. **1**A to **1**D are perspective views showing a structure of a semiconductor device according to an embodiment of the present invention;

[0015] FIGS. **2**A to **2**F are cross-sectional views for describing a method of fabricating a semiconductor device according to a first embodiment of the present invention;

[0016] FIGS. **3**A to **3**H are cross-sectional views for describing a method of fabricating a semiconductor device according to a second embodiment of the present invention;

[0017] FIGS. **4**A to **4**D are cross-sectional views for describing a method of fabricating a semiconductor device according to a third embodiment of the present invention;

[0018] FIGS. **5**A to **5**D are cross-sectional views for describing a method of fabricating a semiconductor device according to a fourth embodiment of the present invention;

[0019] FIGS. **6** and **7** are a block diagram showing a configuration of a memory system according to an embodiment of the present invention;

[0020] FIGS. **8** and **9** are a block diagram showing a configuration of a computing system according to an embodiment of the present invention.

DETAILED DESCRIPTION

[0021] Various exemplary embodiments of the present invention will be described. In the drawings, elements and regions are not drawn to scale, and their sizes and thicknesses may be exaggerated for clarity. In the description of the present invention, known configurations that are not central to the principles of the present invention may be omitted.

Throughout the drawings and corresponding description, the same components are denoted by the same reference numerals.

[0022] FIG. **1**A is a perspective view showing a structure of a semiconductor device according to a first embodiment of the present invention. As illustrated in FIG. **1**A, the semiconductor device according to the embodiment of the present invention includes a stacked structure ST having a sidewall in the shape of stairs. The stacked structure ST includes conductive layers **11** and insulating layers **12**, which are alternately stacked. For example, the insulating layers **12** are stacked in the shape of stairs, and the conductive layers **11** are interposed between the stacked insulating layers **12**.

[0023] Referring to the enlarged view, each of the conductive layers **11** includes a first region **11**A interposed between upper and lower insulating layers **12**U and **12**L, and a second region **11**B protruding from between the upper insulating layer **12**U and the lower insulating layer **12**L. The first region **11**A may be a gate electrode of a select transistor, a memory cell, etc., a word line, or a select line. Further, the second region **118** may be a pad part for connecting a contact plug thereto.

[0024] The second region **11**B of each of the conductive layers **11** has a greater thickness than the first region **11**A (T**3**>T**1**). Although the first regions **11**A of the conductive layers **11** and the insulating layers **12** are shown to have the same thickness (T**1**=T**2**) in FIG. **1**A, they may have different thicknesses from each other. For example, the first regions **11**A of the conductive layers **11** may be thinner than the insulating layers **12**.

[0025] The second region **11**B of each of the conductive layers **11** may have a bird's beak shape (please see the drawing). For example, each of the conductive layers **11** may include a protruding part (A) formed on a sidewall of the second region **11**B. The protruding part (A) may be formed on a part of the sidewall of the second region **11**B. As an example, the protruding part (A) is shown to be extended from an upper surface of the conductive layer **11** and located on the sidewall of the second region **11**B in FIG. **1**A. According to this structure, a first undercut UC**1** is located under the protruding part (A). Further, an upper surface of the second region **11**B of the conductive layer **11** may be formed at a level equal to or lower than an upper surface of the upper insulating layer **12**U corresponding thereto.

[0026] For reference, although all of the conductive layers **11** are described to include the second regions **11**B of the same width W in FIG. **1**A, the conductive layers **11** may include second regions **11**B of different widths. For example, at least one uppermost conductive layer **11** and at least one lowermost conductive layer **11** may include the second regions **11**B of a greater width than other conductive layers **11**.

[0027] First slits SL**1** are located at both sides of the stacked structure ST. For example, the first slit SL**1** is located between the adjacent stacked structures ST. The stacked structure ST may further include sacrificial layers **13** located in a central region, which is spaced apart from the first slit SL**1**. The sacrificial layers **13** are interposed between the stacked insulating layers **12**, and the conductive layer **11** formed in the same layer covering a sidewall of the sacrificial layer **13**. In this case, the conductive layers **11** are located in a sidewall of the stacked structure ST exposed through the first slit SL**1**, that is, in a side region of the stacked structure ST, and the sacrificial layers **13** are located in the central region of the stacked structure ST.

[0028] The semiconductor device may further include at least one second slit SL**2** and a semiconductor pattern **14** passing through the stacked structure ST. Here, an insulating layer may fill the first and second slits SL**1** and SL**2**. Further, the semiconductor pattern **14** may be a channel layer, and the channel layer may be covered with a multilayered dielectric layer.

[0029] According to the above-described structure, the thickness of the second region **11**B of the conductive layer **11** may be selectively increased. Therefore, since the thickness of the second region **11**B may be increased without increasing the height of the stacked structure, it may be prevented from causing a bridge where a contact plug passes through the conductive layer **11**. Specially, because the protruding part (A) is located on the sidewall of the second region **11**B of the conductive layer **11** and the first undercut UC**1** is formed under the protruding part (A), the distance between the second region **11**B of the upper conductive layer **11** and the second region **11**B of the lower conductive layer **11** increases by the first undercut UC**1**. Therefore, a bridge between the stacked conductive layers **11** may be prevented.

[0030] FIG. **1**B is a perspective view showing a structure of a semiconductor device according to a second embodiment of the present invention. For the sake of brevity, structures that have been previously explained will not be described again, so, for further clarity, please refer to descriptions and illustrations of previous embodiments.

[0031] As illustrated in FIG. **1**B, a semiconductor device according to an embodiment of the present invention includes a stacked structure ST including conductive layers **11**, insulating layers **12**, sacrificial layers **13**, semiconductor patterns **14**, and a second slit SL**2**. Further, first slits SL**1** are located at both sides of the stacked structure ST.

[0032] Referring to the enlarged view, each of the conductive layers **11** includes a first region **11**A interposed between upper and lower insulating layers **12**U and **12**L, and a second region **11**B protruding from between the upper insulating layer **12**U and the lower insulating layer **12**L. The second region **11**B of each of the conductive layers **11** has a greater thickness than the first region **11**A, and includes a protruding part (A) formed on a sidewall of the second region **11**B. The protruding part (A) may be formed on a part of the sidewall of the second region **11**B. As an example, the protruding part (A) is located centrally on the sidewall of the second region **11**B in FIG. **1**B, According to this structure, a first undercut UC**1** may be located under the protruding part (A). Further, a groove G may be located between the second region **11**B of the conductive layer **11** and the upper insulating layer **12**U corresponding thereto.

[0033] For reference, although not shown in this drawing, an insulating pattern may be located on the second region **11**B of the conductive layer **11**, and a second undercut UC**2** may be located between the protruding part (A) and the insulating pattern corresponding thereto.

[0034] FIG. **1**C is a perspective view showing a structure of a semiconductor device according to a third embodiment of the present invention.

[0035] As illustrated in FIG. **1**C, a semiconductor device according to an embodiment of the present invention includes a stacked structure ST including conductive layers **11**, insulating layers **12**, sacrificial layers **13**, semiconductor patterns

14, and a second slit SL**2**. Also, first slits SL**1** are located at both sides of the stacked structure ST.

[0036] Referring to the enlarged view, each of the conductive layers **11** includes a first region **11**A interposed between upper and lower insulating layers **12**U and **12**L and a second region **11**B protruding from between the upper insulating layer **12**U and the lower insulating layer **12**L. The second region **11**B of each of the conductive layers **11** may have a greater thickness than the first region **11**A and include a first protruding part (A) formed on a sidewall of the second region **11**B and a second protruding part (B) formed on an upper surface of the second region **11**B. The first protruding part (A) may be formed on a part of the sidewall of the second region **11**B, and the second protruding part (B) may be formed on a part of the upper surface of the second region **11**B. Furthermore, the upper surface of the second protruding part (B) may be on a same level as the upper surface of the upper insulating layer **12**U.

[0037] FIG. **1**D is a perspective view showing a structure of a semiconductor device according to an embodiment.

[0038] As shown in FIG. **1**D, the semiconductor device according to an embodiment includes a stacked structure ST including conductive layers **11**, insulating layers **12**, sacrificial layers **13**, semiconductor patterns **14** and a second slit SL**2**. Further, first slits SL**1** are located at both sides of the stacked structure ST.

[0039] Referring to the enlarged view, each of the conductive layers **11** includes a first region **11**A interposed between upper and lower insulating layers **12**U and **12**L and a second region **11**B protruding from between the upper insulating layer **12**U and the lower insulating layer **12**L. The second region **11**B of the each of the conductive layers **11** may have a greater thickness than the first region **11**A and include a first protruding part. A formed on a sidewall of the second region **11**B. The first protruding part A includes an inclined lower surface which becomes thinner towards an end. Further, a groove G may be located between the second region **11**B of the conductive layer **11** and the upper insulating layer **12**U which corresponds to the conductive layer **11**.

[0040] FIGS. **2**A to **2**F are cross-sectional views for describing a method of fabricating a semiconductor device according to a first embodiment of the present invention.

[0041] As illustrated in FIG. **2**A, a stacked structure ST including first material layers **21** and second material layers **22**, which are alternately stacked, is formed. The first material layers **21** form a gate electrode of a select transistor, a memory cell, etc., and the second material layers **22** form an insulating layer configured to electrically divide stacked conductive layers.

[0042] The first material layers **21** are formed of a material having a greater etch selectivity with respect to the second material layers **22**. For example, the first material layers **21** may be formed of a sacrificial layer including nitride, etc., and the second material layers **22** may be formed of an insulating layer including oxide, etc. Alternatively, the first material layers **21** may be formed of a first sacrificial layer including nitride, etc., and the second material layers **22** may be formed of a second sacrificial layer including oxide, etc. In the embodiment, the first material layers **21** are formed of a sacrificial layer, and the second material layers **22** are formed of an insulating layer.

[0043] Next, the first material layers **21** and the second material layers **22** are patterned in the shape of stairs. For example, a sidewall of the stacked structure ST is patterned so that at least one first material layer **21** and at least one second material layer **22** constitute a single layer. Each layer may include an upper second material layer **22** and a lower first material layer **21**. In this case, the first material layers **21** are stacked in the shape of stairs, and the second material layers **22** are interposed between the first material layers **21**. Further, each of the second material layers **22** includes a first region **22**A interposed between the upper first material layer **21** and the lower first material layer **21**, and a second region **226** which extends from the first region **22**A and covers the lower first material layer **21**. The second region **226** of each of the second material layers **22** may be thinner than the first region **22**A (T**4**<T**5**).

[0044] As illustrated in FIG. **26**, impurities are doped into second regions **22**B' of second material layers **22**'. The impurities may include a p-type dopant such as boron (B), etc., an n-type dopant such as phosphorus (P), arsenic (As), etc., or an inert element such as argon (Ar), helium (He), etc. As the impurities are doped into the second regions **22**B', the etch rate of the second region **22**B' may increase. For example, impurities may be doped using an ion implantation process. In this case, a projected range (Rp) is adjusted so that the impurities are doped into the second regions **22**B' of the second material layers **22**'.

[0045] As illustrated in FIG. **2**C, first undercuts UC**1** are formed under the second material layers **22**'. For example, the first undercuts UC**1** are formed under the second regions **22**B' of the second material layers **22**' by etching a part of the first material layers **21**. Thus, the second material layers **22**' protrude from the first material layers **21**. For reference, the first undercuts UC**1** may be formed before an impurity doping process.

[0046] As illustrated in FIG. **2**D, a liner layer **23** is formed on the stacked structure ST, and then an interlayer insulating layer **24** is formed. The liner layer **23** fills the first undercuts UC**1**, and is formed along a side all of the stacked structure ST, which is patterned in the shape of stairs. For example, the liner layer **23** may include oxide material, and may be formed using a chemical vapor deposition (CVD) method, an atomic layer deposition (ALD) method, etc.

[0047] Although not shown in this drawing, the stacked structure ST may be divided on the basis of memory blocks. For example, first slits (see SL**1** in FIGS. **1**A and **1**B) passing through the first and second material layers **21** and **22**' may be formed and the single stacked structure ST may be divided into a plurality of stacked structures ST.

[0048] Further, a semiconductor pattern (see **14** in FIGS. **1**A and **1**B) passing through the first regions **22**A of the second material layers **22**' and the first material layers **21** may be formed. For example, a hole passing through the first regions **22**A of the second material layers **22**' and the first material layers **21** is formed, and then a semiconductor pattern and a memory layer covering the semiconductor pattern is formed in the hole. For example, the memory layer may include a charge blocking layer, a data storage layer, and a tunnel insulating layer. The data storage layer may include a floating gate such as a poly-silicon layer, etc., a charge trap layer such as a nitride layer, etc., a nano dot, a phase change material layer, etc.

[0049] As illustrated in FIG. **2**E, opening parts OP are formed by removing the first material layers **21** and the second regions **22**B' of the second material layers **22**'. For example, a second slit (see SL**2** in FIGS. **1**A and **1**B) passing through the first and second material layers **21** and **22**' is

formed, and then the opening parts are formed by removing the first material layers **21** exposed through the second slit. Because the etch rate of the second regions **22**B' of the second material layers **22'** increases by impurity doping, the second regions **22**B' of the second material layers **22'** may be removed together when the first material layers **21** are removed. Therefore, each of the opening parts OP has a shape where the thickness is greater at the end (T**7**>T**6**). Further, protruding parts are formed on sidewalls of the opening parts OP. For reference, although the second regions **22**B' of the second material layers **22'** are described as being completely removed in the drawing, the second regions **22**B' may not be completely removed but may remain.

[0050] As illustrated in FIG. **2**F, conductive layers **25** are formed in the opening parts OP. Each of the conductive layers **2** includes a third region **25**A interposed between the second material layers **22** and a fourth region **25**B which extends from the third region **25**A and protrudes between the upper second material layers **22** and the lower second material layers **22**. Further, the conductive layers **25** may include protruding parts formed on sidewalls of the fourth regions **25**B. For reference, a memory layer may be further formed in the opening parts before the conductive layers **25** are formed.

[0051] Next, contact plugs **26** connected to the fourth regions **25**B of the conductive layers **25** are formed to pass through the interlayer insulating layer **24** and the liner layer **23**.

[0052] For reference, a part of the above-described process may be changed depending on materials of the first and second material layers **21** and **22**. For example, when the first material layers **21** are formed of a first sacrificial layer, and the second material layers **22** are formed of a second sacrificial layer, the opening parts are formed by removing the first and second material layers **21** and **22** through the second slit, and then a process of forming an insulating layer in the opening parts may be further performed.

[0053] According to the above-described process, the thickness of the fourth region **25**B of the conductive layer **25** may be selectively increased. Further, as the first undercuts UC**1** are formed under the protruding parts of the conductive layers **25**, the distance between the fourth region **25**B of the upper conductive layer **25** and the fourth region **25**B of the lower conductive layer **25** may be increased.

[0054] FIGS. **3**A to **3**H are cross-sectional views for describing a method of fabricating a semiconductor device according to a second embodiment of the present invention.

[0055] As illustrated in FIG. **3**A, a stacked structure ST including first material layers **31** and second material layers **32**, which are alternately stacked, is formed, and then a sidewall thereof is patterned in the shape of stairs. Each of the second material layers **32** includes a first region **32**A interposed between the upper first material layer **31** and the lower first material layer **31**, and a second region **32**B which extends from the first region **32**A and covers the lower first material layer **31**.

[0056] As illustrated in FIG. **3**B first undercuts UC**1** are formed under the second material layers **32**. For example, the first undercuts UC**1** are formed under the second regions **32**B of the second material layers **32** by etching parts of the first material layers **31**. Thus, the second material layers **32** protrude from the first material layers **31**.

[0057] As illustrated in FIG. **3**C, a third material layer **33** is formed on the stacked structure ST in which the first undercuts UC**1** are formed. The third material layer **33** is formed of a material having a greater etch selectivity with respect to the second material layers **32**. For example, the third material layer **33** includes nitride or silicon.

[0058] The third material layer **33** may be formed to have a thickness such that the first undercuts UC**1** are not entirely filled. Further, the third material layer **33** may be formed using a method having excellent step coverage, such as a low pressure chemical vapor deposition (LPCVD) method, etc. For example, the third material layer **33** may be a nitride layer or a silicon layer formed using the LPCVD method.

[0059] Next, impurities are doped into second regions **32**B' of second material layers **32'**. Compared with the embodiment described with reference to FIG. **2**B, the second region **32**B' of the second material layer **32'** has a relatively small thickness. Therefore, the level of impurity doping may be reduced. Impurities may be partially doped on the third material layer **33** formed on the second region **32**B'. Therefore, etch rates of the third material layer **33** and the second region **32**B' increase.

[0060] As illustrated in FIG. **3**D, an insulating layer **34** is formed on the third material layer **33**. The insulating layer **34** may include oxide material. Further, the insulating layer **34** may be formed using a method having relatively poor step coverage, such as a plasma enhanced chemical vapor deposition (PECVD) method, etc. In this case, while the insulating layer **34** is thick in a horizontal region of the stacked structure ST, the insulating layer **34** is formed to be thin in a vertical region of the stacked structure ST, i.e., the sidewall of the stacked structure ST. Therefore, the insulating layer **34** is thick in the second region **32**B', and the insulating layer **34** is not filled and a seam S is formed in the first undercuts UC**1**. The seam S is a vacant space made in the process of forming the insulating layer **34** in the first undercuts UC**1** that have a relatively small width. The seam S, having a small width, may be extended from the outside to the inside of the first undercuts UC**1**.

[0061] As illustrated in FIG. **3**E, insulating patterns **34**A are formed by etching the insulating layer **34**. For example, when the insulating layer **34** is etched using a wet etching process, an etching solution flows into the seam S, and the insulating layer **34** formed in the first undercuts UC**1** is etched. Therefore, the insulating layer **34** formed in the first undercuts UC**1** is removed, and the insulating patterns **34**A located on the second regions **32**B' of the second material layers **32'** are formed.

[0062] Third material patterns **33**A are formed by etching the third material layer **33** in which the insulating patterns **34**A are used as a barrier. Because regions uncovered by the insulating patterns **34**A are etched, the third material patterns **33**A are located under the insulating patterns **34**A, respectively. The insulating patterns **34**A may protrude more than the third material patterns **33**A. Therefore, second undercuts UC**2** located between the second regions **32**B' of the second material layers **32'** and the insulating patterns **34**A corresponding thereto may be formed. Further, a groove G located between each of the third material patterns **33**A and the first region **32**A of the corresponding second material layer **32'** may be formed.

[0063] As illustrated in FIG. **3**F, a liner layer **35** is formed on the stacked structure ST, and then an interlayer insulating layer **36** is formed. The liner layer **35** fills the first undercuts UC**1**, the second undercuts UC**2**, and the grooves G, and is formed along a sidewall of the stacked structure ST patterned in the shape of stairs.

[0064] Next, although not shown in this drawing, the stacked structure ST may be divided on the basis of memory blocks. Further, a semiconductor pattern (see **14** in FIGS. **1**A and **1**B) passing through the first regions **32**A of the second material layers **32'** and the first material layers **31** may be formed.

[0065] As illustrated in FIG. **3**G, opening parts OP are formed by moving the first material layers **31** and the second regions **32**B' of the second material layers **32'**. Because the etch rate of the second regions **32**B' of the second material layers **32'** increases by the impurity doping, the second regions **32**B' of the second material layers **32'** may be removed together when the first material layers **31** are removed. Further, when the opening parts OP are formed, the third material patterns **33**A may also be removed. For example, when both of the first material layers **31** and the third material patterns **33**A include nitride, the third material patterns **33**A may be removed together when the first material layers **31** are removed. Alternatively, when the first material layers **31** include silicon, the first material layers **31** and the second regions **32**B' are removed, and then the third material patterns **33**A are removed. Thus, the opening parts OP where the thickness increases at the end, and having a protruding part on a sidewall thereof, may be formed.

[0066] As illustrated in FIG. **3**H, conductive layers **37** are formed in the opening parts OP. Each of the conductive layers **37** includes a third region **37**A interposed between the second material layers **32** and a fourth region **37**B which extends from the third region **37**A and protrudes between the upper second material layer **32** and the lower second material layer **32**. Further, each of the conductive layers **37** may include a protruding part A formed on a sidewall of the fourth region **37**B. A groove G is located between the fourth region **37**B of each of the conductive layers **37** and the corresponding second material layer **32**, and the second undercut UC**2** is located between the protruding part (A) of each of the conductive layers **37** and the insulating pattern **34**A corresponding thereto.

[0067] Next, contact plugs **38** connected to the fourth regions **37**B of the conductive layers **37** are formed to pass through the interlayer insulating layer **36** and the liner layer **35**.

[0068] FIGS. **4**A to **4**D are cross-sectional views for describing a method of fabricating a semiconductor device according to a third embodiment of the present invention.

[0069] As illustrated in FIG. **4**A, after a stacked structure ST including first material layers **41** and second material layers **42**, which are alternately stacked, is formed, a sidewall of the stacked structure ST is patterned in the shape of stairs, Each of the second material layers **42** may include a first region **42**A interposed between the upper first material layer **41** and the lower first material layer **41** and a second region **42**B extended from the first region **42**A and covering the lower first material layer **41**.

[0070] Next, impurities may be doped on the side all of the stacked structure ST which is patterned in the shape of stairs For example, the impurities may be doped at a predetermined depth along the stair-shaped sidewall using a plasma doping process. The impurities may be continuously doped along the sidewall, which is patterned in the shape of stairs.

[0071] As illustrated in FIG. **4**B, first undercuts UC**1** may be formed under the second material layers **42**. Since part of the impurities are doped in the first material layer **41**, which is exposed on the sidewall of the stacked structure ST, the first undercuts UC**1** may be formed at a greater depth than the embodiment described in reference to FIG. **2**C.

[0072] As illustrated in FIG. **4**C, opening parts OP may be formed by removing the first material layers **41** and the second regions **42**B of the second material layer **42**, in which impurities are doped. Each of the opening parts OP may have a thickness that is greater at the end, and protruding parts may be formed on a sidewall and an upper surface of the second region **42**B.

[0073] As illustrated in FIG. **4**D, conductive layers **45** may be formed in the opening parts OP. Each of the conductive layers **45** may include a third region **45**A interposed between the upper and lower second material layers **42**A and a fourth region **45**B extended from the third region **45**A and protruding from between the upper and lower second material layers **42**A. Furthermore, the conductive layers **45** may include protruding parts on a sidewall and an upper surface of the fourth region **45**B.

[0074] Next, contact plugs **46** connected to the fourth regions **45**B of the conductive layers **45** are formed to pass through the interlayer insulating layer **44** and the liner layer **43**.

[0075] FIGS. **5**A to **5**D are cross-sectional views for describing a method for fabricating a semiconductor device according to an embodiment.

[0076] As shown in FIG. **5**A, a stacked structure ST is formed. The stacked structure includes alternately stacked first and second material layers **51** and **52**. A side all of the stacked structure ST is patterned in the shape of stairs. Each of the first material layers **51** includes a first region **51**A interposed between the upper second material layer **52** and the lower second material layer **52** and a second region **51**B which extends from the first region **51**A and covers the lower second material layer **52**. The first material layer **51** may be located on a topmost part of each step.

[0077] A third material layer **53** is formed over the stacked structure

[0078] ST which is patterned in the shape of stairs. For example, the third material layer **53** may be a nitride layer formed using a low pressure-chemical vapor deposition (LP-CVD) method. Further, the third material layer **53** may have roughly uniform thickness along a surface of the stacked structure ST.

[0079] Impurities may be doped in a side all of the stacked structure ST. For example, impurities may be doped, to a predetermined depth, along the sidewall in the shape of stairs using an ion implantation process. A projected range Rp may be adjusted such that impurities may be doped into the second region **51**B of the first material layers **51**.

[0080] As shown in FIG. **5**B, insulating patterns **54** may be formed on the third material layer **53**. The insulating patterns **54** may be an oxide layer formed using a high density plasma (HDP) method. For example, the insulating layer may be formed over the third material layer **53** using the HDP method and the insulating patterns **54** may be formed by etching the insulating layer. Since the HDP method may be used and the insulating layer ay be thick in a horizontal direction and thin in a vertical direction, the insulating patterns **54** may be formed over the second region **51**B of the first material layers **51** by etching the insulating layer.

[0081] As shown in FIG. **5**C, third material patterns **53**A and first undercuts UC**1** may be formed by partially etching the third material layer **53** and the first material layers **51** using the insulating patterns **54** as an etch barrier. Etching

may be completed relatively quickly at the third material layer **53** formed using the LP-CVD method and the second region **51**B doped with impurities. Therefore, the third material patterns **53**A may be formed under the insulating patterns **54** using the wet etching process and the first undercuts UC**1** may be formed under the third material patterns **53**A. Further, the groove G may be formed between the third material patterns **53**A and the upper second material layer **52** corresponding to the third material pattern **53**A.

[0082] As shown in FIG. **5**D, a liner layer **55** may be formed which fills the first undercuts UC**1** and the grooves G. For example, the liner layer **55** may be an oxide layer formed by using an atomic layer deposition (ALD) method. And an interlayer insulating layer **56** may be formed over the liner layer **55**.

[0083] Opening parts may be formed by removing the first material layers **51** and the third material patterns **53**A. Thickness of end terminals of each of the opening parts increases, and a protruding part may be formed on the side all. Conductive layers **57** may be formed in the opening parts. Each of the conductive layers **57** includes a third region **57**A interposed between the second material layers **52** and a fourth region **57**B extending from the third region **57**A and protruding from between the upper second material layer and the lower second material layer **52**. Further the conductive layers **57** include a protruding part formed on the sidewall of the fourth region **57**B. Contact plugs **58** are formed which may be respectively coupled to the fourth region **57**B of the conductive, layers **57** by passing through the interlayer insulating layer **56** and the liner layer **55**.

[0084] FIG. **6** is a block diagram showing a configuration of a memory system according to an embodiment of the present invention.

[0085] As illustrated in FIG. **6**, a memory system **1000** according to the embodiment of the present invention includes a memory device **1200** and a controller **1100**.

[0086] The memory device **1200** is used to store various types of data such as text, graphics, software code, etc. The memory device **1200** may be a nonvolatile memory, and may include the structure described with reference to FIGS. **1**A to **5**D. Further, the memory device **1200** may include insulating layers and conductive layers alternately stacked in the shape of stairs. The conductive layers each includes a first region interposed between upper and lower insulating layers and a second region which extends from the first region and protrudes between the upper and lower insulating layers, wherein the protruding part is formed on a sidewall or an upper surface of the second region. Since the structure and fabricating method of the memory device **1200** is the same as described above, a detailed description will be omitted.

[0087] The controller **1100** is connected to a host and the memory device **1200**, and is configured to access the memory device **1200** in response to a request from the host. For example, the controller **1100** is configured to control read, write, erase, and background operations of the memory device **1200**.

[0088] The controller **1100** includes a random access memory (RAM) **1110**, a central processing unit (CPU) **1120**, a host interface **1130**, an error correction code (ECC) circuit **1140**, a memory interface **1150**, etc.

[0089] The RAM **1110** may be used as an operation memory of the CPU **1120**, a cache memory between the memory device **1200** and the host, a buffer memory between the memory device **1200** and the host, and so on. For reference, the RAM **1110** may be replaced with a static RAM (SRAM), a read only memory (ROM), etc.

[0090] The CPU **1120** is configured to control overall operations of the controller **1100**, For example, the CPU **1120** is configured to operate firmware such as a Flash Translation Layer (FTL) stored in the RAM **1110**.

[0091] The host interface **1130** is configured to interface with the host. For example, the controller **1100** communicates with the host through at least one of various interface protocols such as a Universal Serial Bus (USB) protocol, a MultiMediaCard (MMC) protocol, a Peripheral Component Interconnect (PCI) protocol, a PCI-Express (PCI-E) protocol, an Advanced Technology Attachment (ATA) protocol, a Serial-ATA protocol, a Parallel-ATA protocol, a Small Computer System Interface (SCSI) protocol, an Enhanced Small Disk Interface (ESDI) protocol, an Integrated Drive Electronics (IDE) protocol, a private protocol, and so on.

[0092] The ECC circuit **1140** is configured to detect and correct errors in data read from the memory device **1200** using the ECC.

[0093] The memory interface **1150** is configured to interface with the memory device **1200**. For example, the memory interface **1150** includes a NAND interface or a NOR interface.

[0094] For reference, the controller **1100** may further include a buffer memory (not shown) in order to temporarily store data. The buffer memory may be used to temporarily store data to be delivered externally through the host interface **1130**, or data delivered from the memory device **1200** through the memory interface **1150**. Further, the controller **1100** may include a ROM to store code data for interfacing with the host.

[0095] According to the embodiments of the present invention there is provided the memory device **1200** which is simple to fabricate and highly integrated and which has a stable structure. Accordingly, the characteristics of the memory system **1000** may be improved and degree of integration may be also enhanced.

[0096] FIG. **7** is a block diagram showing a configuration of a memory system according to another embodiment of the present invention.

[0097] As illustrated in FIG. **7**, a memory system **1000'** according to the embodiments of the present invention includes a memory device **1200'** and a controller **1100**. Further, the controller **1100** includes a RAM **1110**, a CPU **1120**, a host interface **1130**, an ECC circuit **1140**, a memory interface **1150**, and so on.

[0098] The memory device **1200'** may be a nonvolatile memory, and may include the structure described with reference to FIGS. **1**A to **4**D. Further, the memory device **1200'** may include insulating layers and conductive layers alternately stacked in the shape of stairs. The conductive layers each includes a first region interposed between upper and lower insulating layers and a second region which extends from the first region and protrudes between the upper and lower insulating layers, wherein the protruding part is formed on a sidewall or an upper surface of the second region.

[0099] Further, the memory device **1200'** may be a multi-chip package configured with a plurality of the memory chips. The plurality of memory chips are divided into a plurality of groups, and the plurality of groups are configured to communicate with the controller **1100** through first to k^{th} channels CH**1** to CHk. The memory chips belonging to one group are configured to communicate with the controller **1100** through

a common channel. For reference, the memory system **1000'** may be transformed to connect one channel to one memory chip.

[0100] According to the embodiment of the present invention, the memory system **1000'** includes the memory device **1200'** which is simple to fabricate and highly integrated and which has a stable structure. Accordingly, the characteristics of the memory system **1000'** may be improved and degree of integration may be also enhanced. In particular, by configuring the memory device **1200'** as a mufti-chip package, data storage capacity of the memory system **1000'** may be increased and its driving speed may be improved.

[0101] FIG. **8** is a block diagram showing a configuration of a computing system according to an embodiment of the present invention.

[0102] As illustrated in FIG. **8**, according to the embodiment of the present invention, a computing system **2000** includes a memory device **2100**, a CPU **2200**, a RAM **2300**, a user interface **2400**, a power supply **2500**, a system bus **2600**, and so on.

[0103] The memory device **2100** stores data provided through the user interface **2400**, data processed by the CPU **2200**, etc. The memory device **2100** is electrically connected to the CPU **2200**, the RAM **2300**, the user interface **2400**, the power supply **2500**, and so on through the system bus **2600**. For example, the memory device **2100** may be connected to the system bus **2600** through a controller (not shown) or may be directly connected to the system bus **2600**. When the memory device **2100** is directly connected to the system bus **2600**, the functions of the controller may be performed by the CPU **2200**, the RAM **2300**, and so on.

[0104] The memory device **2100** may be a nonvolatile memory, and may include the structure described with reference to FIGS. **1**A to **4**D. Further, the memory device **2100** may include insulating layers and conductive layers alternately stacked in the shape of stairs. The conductive layers each includes a first region interposed between upper and lower insulating layers and a second region which extends from the first region and protrudes between the upper and lower insulating layers, wherein a protruding part is formed on a sidewall or an upper surface of the second region. Since the structures and fabricating methods of the memory device **2100** are the same as described above, detailed descriptions will be omitted.

[0105] Further, the memory device **2100** may be a multi-chip package configured with a plurality of the memory chips as described with reference to FIG. **7**.

[0106] The computing system **2000** having such a configuration may be a computer, an ultra mobile PC (UMPC), a workstation, a netbook, a personal digital assistant (PDA), a portable computer, a web tablet, a wireless phone, a mobile phone, a smartphone, an e-book, a portable multimedia player (PMP), a portable game console a navigation device, a black box, a digital camera, a 3-dimensional television, a digital audio recorder, a digital audio player, a digital picture recorder, a digital picture player, a digital video recorder, a digital video player, a device for wirelessly sending and receiving information, at least one of various electronic devices configuring a home network, a computer network, or a telematics network, a radio-frequency identification (RFID) device, etc.

[0107] According to the embodiments of the present invention, there is provided the memory device **2100** which is simple to fabricate and highly integrated and which has a stable structure. Accordingly, the characteristics of the computing system **2000** may be improved and data storage capacity may be also enhanced.

[0108] FIG. **9** is a block diagram showing a computing system according to another embodiment of the present invention.

[0109] As illustrated in FIG. **9**, according to the embodiment of the present invention, a computing system **3000** includes a software layer having an operating system **3200**, an application **3100**, a file system **3300**, a translation layer **3400**, etc. Further, the computing system **3000** includes a hardware layer such as a memory device **3500**, etc.

[0110] The operating system **3200** manages software resources and hardware resources of the computing system **3000**, and may control program execution by the CPU. The application **3100** may be various application programs executed in the computing system **3000**, and may be a utility executed by the operating system **3200**.

[0111] The file system **3300** is a logical structure to manage data, files, etc., in the computing system **3000** and organizes files or data to be stored in the memory device **3500** according to rules. The file system **3300** may be determined by the operating system **3200** used in the computing system **3000**. For example, when the operating system **3200** is Microsoft Windows, the file system **3300** may be File Allocation Table (FAT), NT File System (NTFS), etc. Further, when the operating system **3200** is Unix/Linux, the file system **3300** may be an extended file system (EXT), a Unix File System (UFS), a Journaling File System OFS), etc.

[0112] In this drawing, although the operating system **3200**, the application **3100**, and a file system **3300** are shown as separate blocks, the application **3100** and the file system **3300** may be included in the operating system **3200**.

[0113] A translation layer **3400** translates an address into an appropriate type for the memory device **3500** in response to a request from the file system **3300**. For example, the translation layer **3400** translates a logical address created by the file system **3300** into a physical address of the memory device **3500**. Mapping information of the logical address and the physical address may be stored in an address translation table. For example, the translation layer **3400** may be an FTL, a Universal Flash Storage link layer (ULL), etc.

[0114] The memory device **3500** may be a nonvolatile memory, and may include the structure described with reference to FIGS. **1**A to **4**D. Further, the memory device **3500** may include insulating layers and conductive layers alternately stacked in the shape of stairs. The conductive layers each includes a first region interposed between upper and lower insulating layers and a second region which extends from the first region and protrudes between the upper and lower insulating layers, wherein a protruding part is formed on a sidewall or an upper surface of the second region. Since the structure and fabricating method of the memory device **3500** are the same as described above, detailed descriptions will be omitted.

[0115] The computing system **3000** having this configuration may be separated into an operating system layer implemented in an upper level region and a controller layer implemented in a lower level region. The application **3100**, the operating system **3200**, and the file system **3300** may be included in the operating system layer, and may be driven by an operating memory of the computing system **3000**. The translation layer **3400** may be included in the operating system layer or the controller layer.

[0116] According to the embodiments of the present invention, there is provided the memory device **3500** which is simple to fabricate and highly integrated and which has a stable structure. Accordingly, the characteristics of the computing system **3000** may be improved and data storage capacity may be also enhanced.

[0117] Thicknesses of the ends of the stacked conductive layers are selectively increased. Therefore, without increasing the height of the stacked structure, a bridge that occurs when the contact plug is formed may be prevented.

[0118] While the spirit and scope of the invention is described by detailed exemplary embodiments of the invention, it should be noted that the above-described embodiments are merely descriptive and should not be considered limiting. Further, it should be understood by those skilled in the art that various changes, substitutions, and alterations may be made herein without departing from the scope of the invention as defined by the following claims.

What is claimed is:

1. A semiconductor device, comprising:

insulating layers stacked in the shape of stairs; and

conductive layers alternately stacked with the insulating layers,

wherein the conductive layers each include a first region interposed between upper and lower insulating layers thereof, among the insulating, layers and a second region which extends from the first region and protrudes between the upper and lower insulating layers, and

wherein a protruding part is formed on a side all or an upper surface of the second region.

2. The semiconductor device of claim **1**, further comprising:

a first undercut formed between the protruding part of each of the conductive layers and the lower insulating layer thereof.

3. The semiconductor device of claim **2**, further comprising:

a liner layer formed on the conductive layers and the insulating layers to fill the first undercut.

4. The semiconductor device of claim **3**, further comprising:

contact plugs connected to second regions of the conductive layers and passing through the liner layer.

5. The semiconductor device of claim **1**, further comprising:

a groove formed between the second region of each of the conductive layers and the upper insulating layer corresponding thereto.

6. The semiconductor device of claim **1**, further comprising:

an insulating pattern formed on the second region of each of he conductive layers; and

a second undercut formed between the protruding part of each of the conductive layers and the insulating pattern corresponding thereto.

7. The semiconductor device of claim **1**, further comprising:

an insulating pattern formed on the second region of each of the conductive layers; and

contact plugs connected to second regions of the conductive layers and passing through the insulating pattern.

8. The semiconductor device of claim **1**, further comprising:

semiconductor patterns formed to pass through first regions of the conductive layers and the insulating layers.

9. The semiconductor device of claim **1**, wherein the second region of each of the conductive layers has a greater thickness than the first region thereof.

10. The semiconductor device of claim **1**, wherein the protruding part of each of the conductive layers is farmed to extend from the upper surface of the second region thereof.

11. The semiconductor device of claim **1**, wherein the protruding part of each of the conductive layers is formed in a center of the sidewall of the second region thereof.

12. The semiconductor device of claim **1**, wherein the upper surface of the second region of each of the conductive layers is formed at a level equal to or lower than an upper surface of the upper insulating layer corresponding thereto.

13. The semiconductor device of claim **1**, wherein the first region of each of the conductive layers is a ward line, and the second region thereof is a pad part.

14. A semiconductor device, comprising:

insulating layers stacked in the shape of stairs, and

conductive layers alternately stacked with the insulating layers, wherein the conductive layers each include a pad part protruding between upper and lower insulating layers thereof, among the insulating layers, in a shape of a bird's beak.

15. The semiconductor device of claim **14**, further comprising:

a liner layer formed on the insulating layers and the conductive layers to cover the pad part of each of the conductive layers.

16. The semiconductor device of claim **15**, further comprising:

contact plugs connected to the conductive layers and passing through the liner layer.

17. The semiconductor device of claim **14**, further comprising:

a first undercut formed between the pad part of each of the conductive layers and the lower insulating layer corresponding thereto.

18. The semiconductor device of claim **14**, further comprising:

a groove formed between the pad part of each of the conductive layers and the upper insulating layer corresponding thereto;

an insulating pattern formed on the pad part of each of the conductive layers; and

a second undercut formed between the pad part of each of the conductive layers and the insulating pattern corresponding thereto.

19. The semiconductor device of claim **14**, wherein the pad part of each of the conductive layers has a greater thickness than other parts thereof.

* * * * *