US007854066B2

(12) **United States Patent**
Wendte

(10) **Patent No.: US 7,854,066 B2**
(45) **Date of Patent: Dec. 21, 2010**

(54) **METHOD AND APPARATUS FOR AN AGRICULTURAL IMPLEMENT SEED METER**

(75) Inventor: **Keith W Wendte**, Willowbrook, IL (US)

(73) Assignee: **CNH America LLC**, New Holland, PA (US)

(*) Notice: Subject to any disclaimer, the term of this patent is extended or adjusted under 35 U.S.C. 154(b) by 0 days.

(21) Appl. No.: **12/684,702**

(22) Filed: **Jan. 8, 2010**

(65) **Prior Publication Data**

US 2010/0101071 A1 Apr. 29, 2010

Related U.S. Application Data

(62) Division of application No. 11/775,040, filed on Jul. 9, 2007, now Pat. No. 7,669,539.

(51) **Int. Cl.**

A01C 7/00	(2006.01)
A01C 9/00	(2006.01)
B21D 53/60	(2006.01)
B21K 19/00	(2006.01)

(52) **U.S. Cl.** **29/891**; 111/185

(58) **Field of Classification Search** 29/891, 29/284; 111/183–185, 177, 200, 900; 221/211, 221/266, 264

See application file for complete search history.

(56) **References Cited**

U.S. PATENT DOCUMENTS

1,816,062	A	7/1931	Tate
3,589,558	A	6/1971	Belyaev et al.
4,793,511	A	12/1988	Ankum et al.
5,170,909	A	12/1992	Lundie et al.
5,392,707	A	2/1995	Romans
5,842,428	A	12/1998	Stuffebeam et al.
6,564,730	B2	5/2003	Crabb et al.
6,742,464	B1	6/2004	Chiu
6,899,042	B1	5/2005	Kowalchuk
7,156,029	B2	1/2007	Harnetiaux
2005/0150442	A1	7/2005	Friesen
2005/0204972	A1	9/2005	Eben et al.

FOREIGN PATENT DOCUMENTS

EP	014699	A2	5/1985

Primary Examiner—Christopher J. Novosad
(74) *Attorney, Agent, or Firm*—Rebecca Henkel

(57) **ABSTRACT**

A seed meter includes an input port configured to receive a supply of seeds and an output port configured to deliver the supply of seeds for dispensing to a planting area and a seed disk configured to receive the supply of seeds from the input port and deliver the supply of seeds to the output port at a substantially uniform rate. The seed disk has a seed side where seeds flow from the input port, and a vacuum side opposite the seed side. The seed meter further includes a first housing portion surrounding a first portion of the seed disk in a fixed relationship to direct the supply of seeds against the seed disk and a second housing portion. The second housing portion is configured to move between a first position extending to a second portion of the seed disk to operate in concert with the first housing portion to direct the supply of seeds against the seed disk and a second position providing access to at least a portion of the second portion of the seed disk including the lowest most portion of the seed disk.

5 Claims, 4 Drawing Sheets

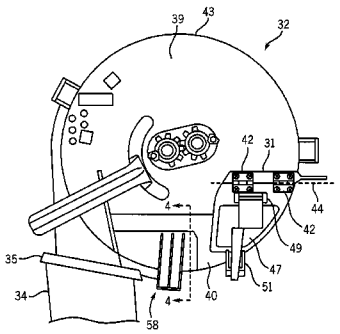

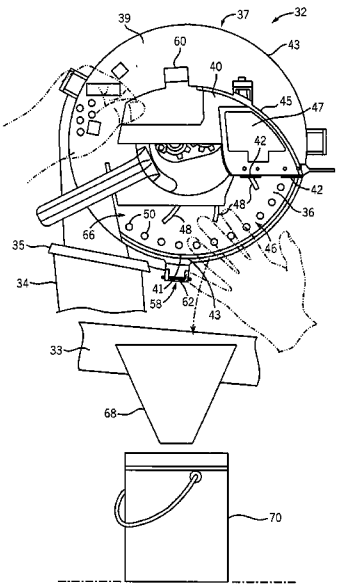

SYNGENTA EXHIBIT 1013
Syngenta v. Inflexion, PGR2025-00045

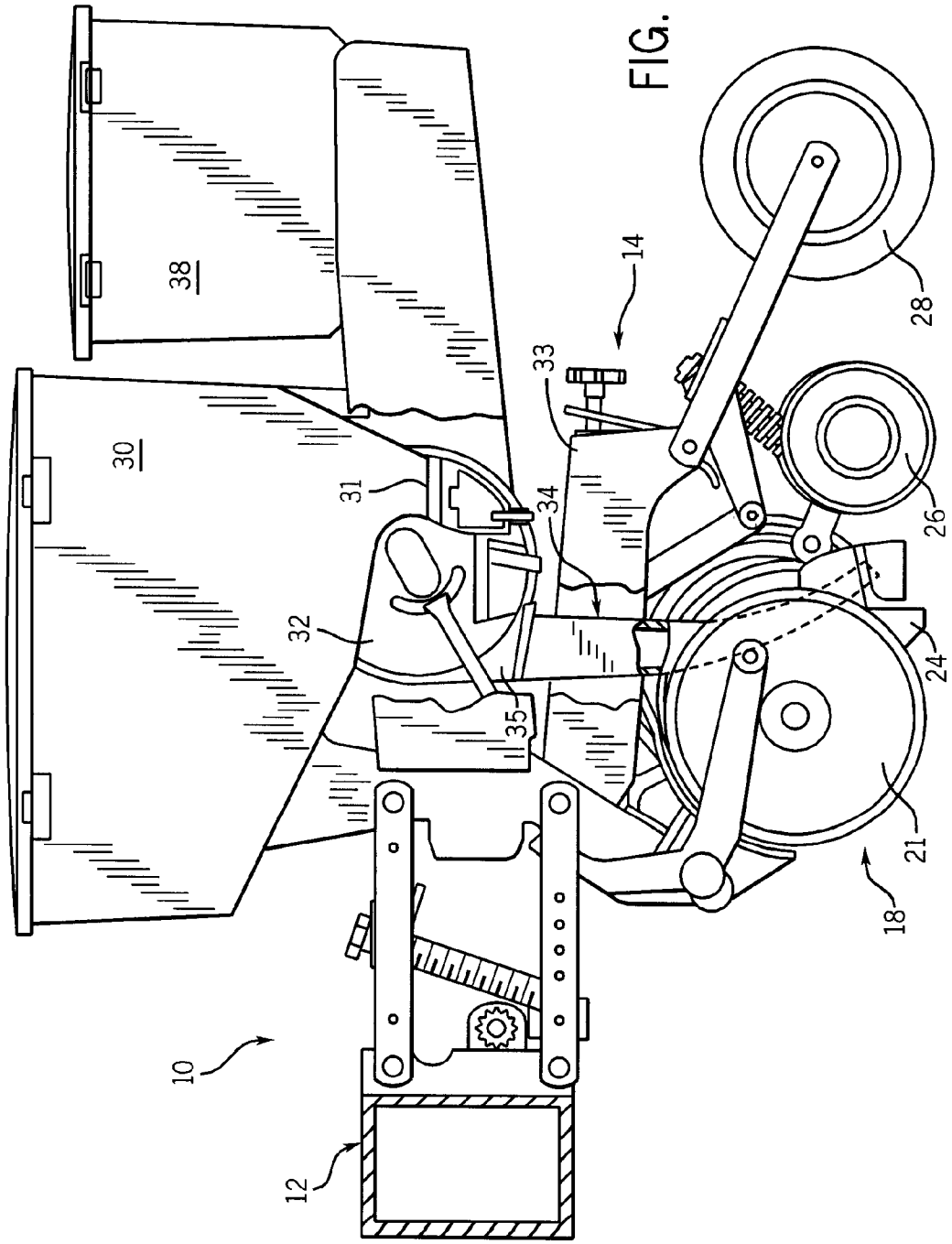

FIG. 1

FIG. 2

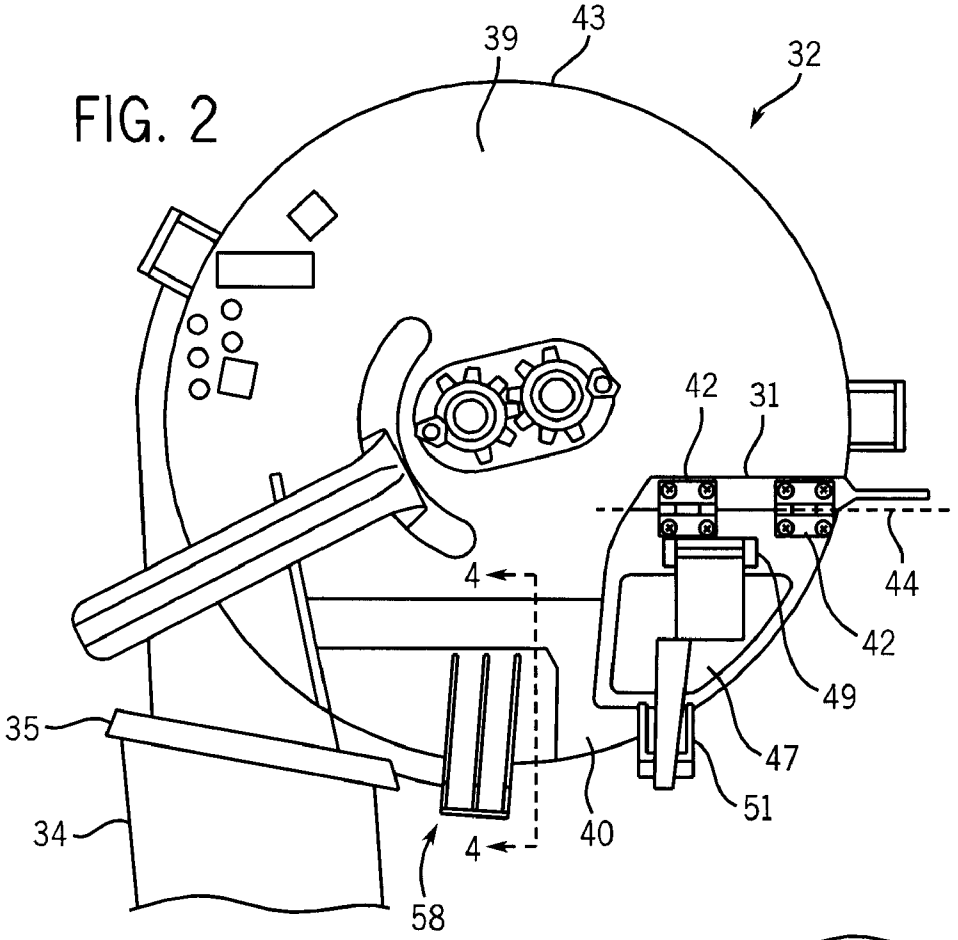
39
43
32
42
31
44
4
42
49
35
47
51
34
40
4
58

FIG. 4

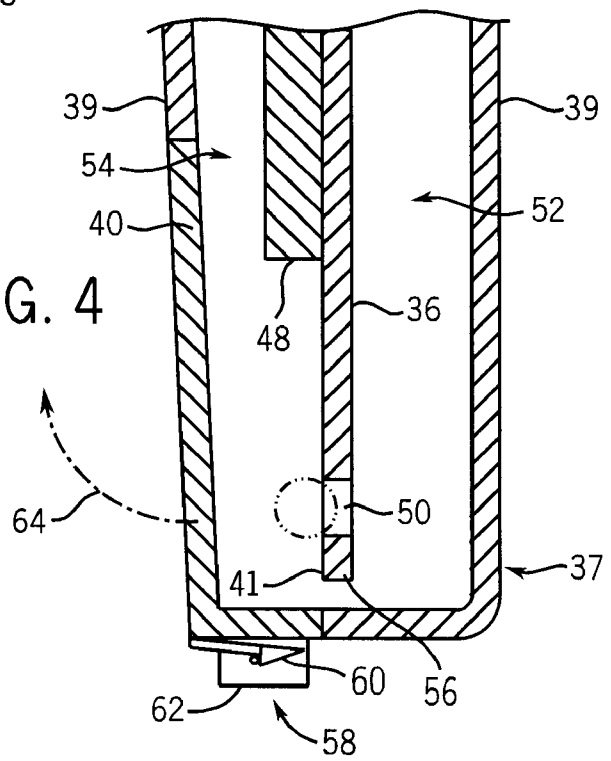
39
39
54
52
40
48
36
64
50
37
41
60
56
62
58

FIG. 3A

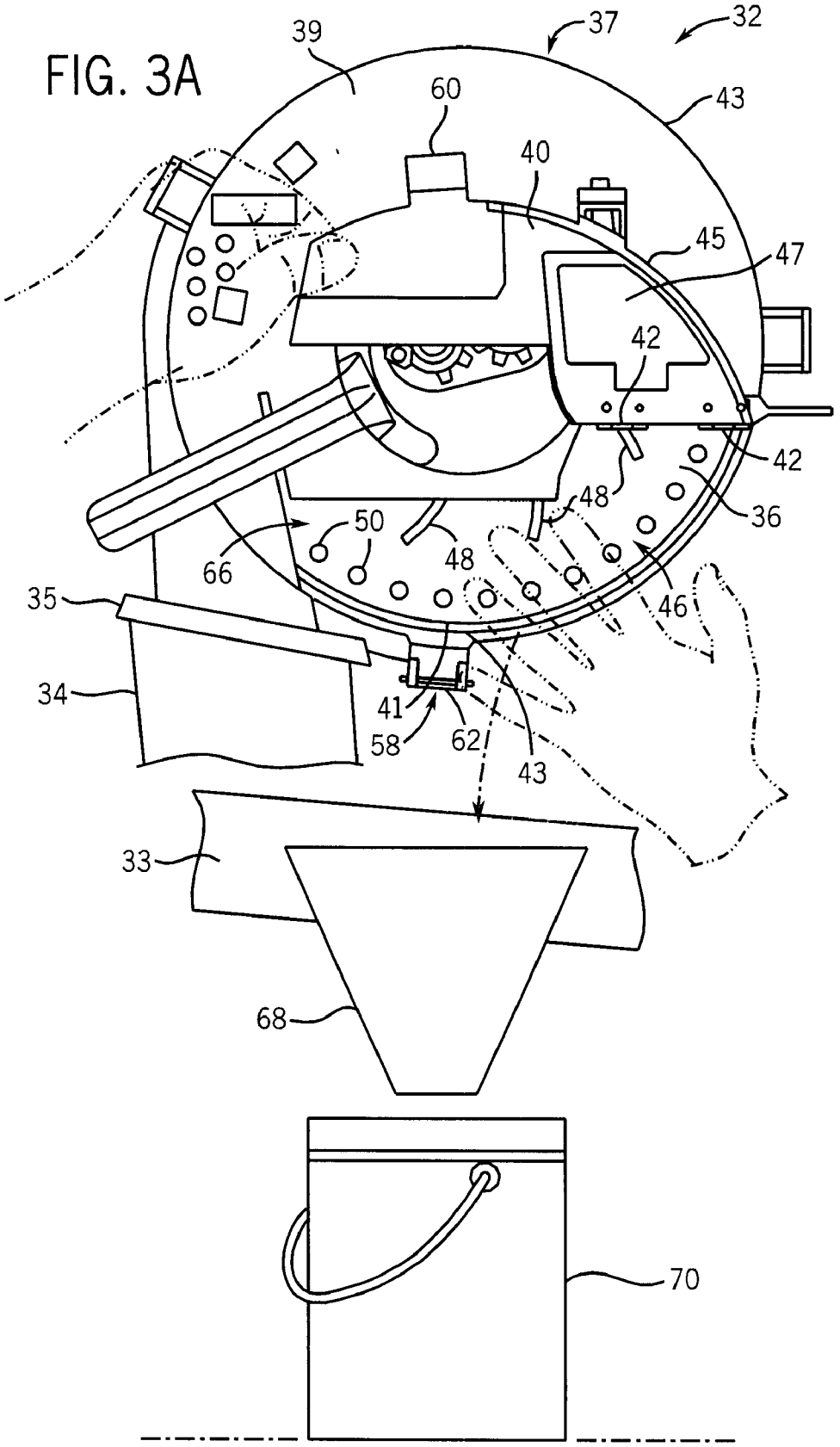
32
37
39
43
60
40
45
47
42
42
48
36
50
48
66
46
35
34
41
58
62
43
33
68
70

FIG. 3B

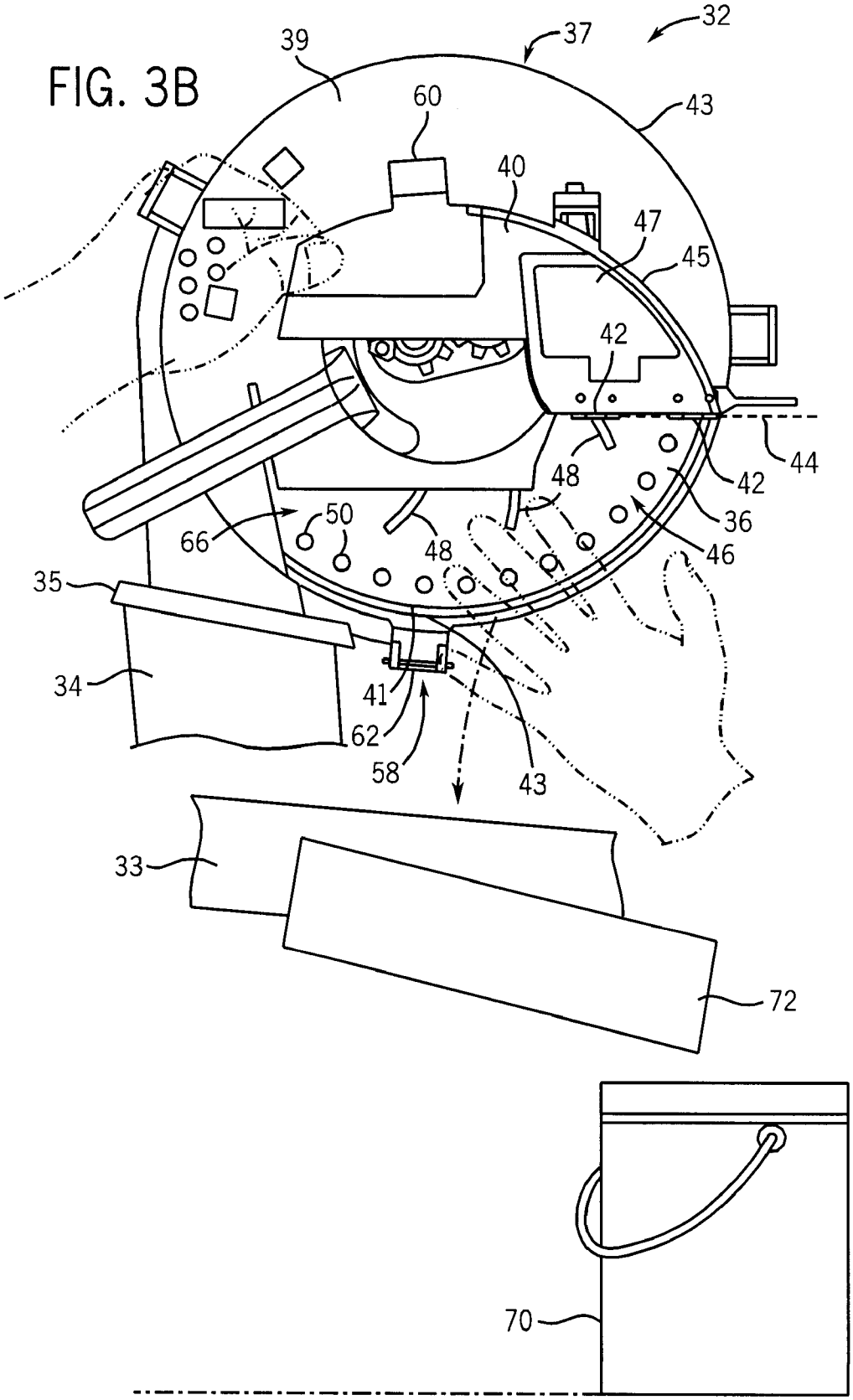
32
37
39
60
43
40
47
45
42
44
42
48
36
46
50
66
48
35
34
41
62
58
43
33
72
70

METHOD AND APPARATUS FOR AN AGRICULTURAL IMPLEMENT SEED METER

CROSS REFERENCE TO RELATED APPLICATIONS

This patent Application is a Divisional of co-pending U.S. patent application Ser. No. 11/775,040, filed on Jul. 9, 2007 entitled, "Method and Apparatus For An Agricultural Implement Seed Meter" and having Keith W. Wendt as the Applicant.

FIELD OF THE INVENTION

The present invention relates to agricultural implements, and, more particularly, to a clean-out method and apparatus for a planter seed meter.

BACKGROUND OF THE INVENTION

As the amount of genetically modified (GM) crops planted increases, it is prudent that additional care be taken to protect the various types of crops from contamination with a different crop. Greater vigilance must be taken to insure that identity-preserved grains remain segregated from planting, through harvesting and packaging in seed bags, and to the time it reaches its final market. Contamination tolerances vary from one variety to another, and some, such as corn containing the Starlink gene, can have a zero level contamination for human food consumption (Gil Gullickson, "Snowed Under By Starlink?", *Farm Industry News*, Feb. 1, 2001). In extreme cases, the negative result of such contamination can be devastating to the person or company at fault for the contamination.

One of the areas for potential contamination is in a planter. A typical planter has row units, which apply the seed, and which are supplied seed via a row hopper or a shared hopper through a plenum, for example. Each row unit typically includes a seed meter to dispense seeds at a controlled rate into a seed furrow as the seed meter is advanced above and along the seed furrow. In a typical arrangement, a tractor is coupled to tow a tool bar to which are attached in a generally parallel, spaced apart relation a plurality of planting units with a seed meter arrangement attached thereto. In addition to the seed hoppers discussed above, the planters can include a device for opening a furrow in the ground as the tractor drawn tool bar is advanced across the field over the ground, and the seed meter is coupled to the seed hopper for dispensing individual seeds into the furrow at a controlled rate, and a further device for moving soil at the sides of the furrow to close the furrow over the seeds.

With the high adoption rate of GM seeds, it is becoming necessary for farmers to clean the seed out of their planter's seed hopper and meter more often and more completely. Older design planters require the removal of the seed hopper and/or meter and often require removing additional doors or the seed disk itself in order to remove all of the seeds.

The many different types of seeds to be planted using a seed metering mechanism include corn, cotton, sorghum, sugar beets, soybeans and sunflowers, to name a few, and such seeds vary considerably in size, weight and shape. Despite these numerous differences in the size, shape and surfaces of such seeds, seed meters are expected and are required to handle all different types of seeds described above plus many more, while requiring minimum effort regarding part changes and adjustments. Different seed meter devices have been developed and include a mechanical type which typically has a

vertical or horizontal seed plate or disc with mechanically actuated fingers or similarly operated mechanical devices for separating individual seeds from the seed disc and then dispense them into the furrow. While some mechanical seed meters are satisfactory for certain applications, they typically suffer from a number of limitations including the limited speed at which they can accurately dispense seeds, and inability to handle different type seeds without making cumbersome and extensive part changes, and an inherent design complexity which may typically add to the cost, wear and maintenance problems of the mechanically operated seed dispensing mechanisms.

Another type of seed meter includes a seed metering mechanism which utilizes an air pressure differential which has been developed in an effort to overcome some of the problems of the mechanical seed meters. Air pressure differential seed meters, which are commonly known as air seed meters, are generally of two types. The first type being the positive pressure type and the second type relying upon negative pressure or vacuum.

In the positive pressure type of air seed metering mechanism, air is blown into the seed chamber and onto the surface of a rotating or otherwise movable and apertured member or disc in order to create the higher than atmospheric pressure in the chamber. This forces seeds from a seed mass onto the seed member or disc where they are retained for later release. The apertures or holes in the rotating member or disc are open to atmosphere where the individual seeds are held by the blowing air until the seeds are dispensed by interrupting the flow of air to the seeds.

While air seed meters of the positive pressure type offer certain advantages over mechanical seed meters, they have certain limitations of their own which may prove to be a significant disadvantage for various seeding applications. In an effort to fill each hole or opening with a seed as the seed disc rotates through the seed mass, a relatively high pressure differential is applied to the disc. Because the seeds are held in place on the rotating disc or other movable member by differential pressure resulting from positive pressure in the chamber, it is usually necessary that the air flow be directed through the seed mass to aid in the depositing of individual seeds onto the disc. The air flow has been found to interfere with the orderly delivery of seeds from the disc and, ultimately, to the ground. In positive pressure seed metering mechanisms, the seed hopper must be sealed to maintain pressure in the system. If for any reason the hopper lid comes off or the hopper otherwise becomes unsealed, the seed meter will not properly function.

Vacuum seed meters have been found to overcome some of the problems in the positive pressure seed meters and offer more control over the seed being transported by the seed disc. In vacuum seed meters, a vacuum source is typically coupled to a separate chamber on the opposite side of the seed disc from the seed mass with the vacuum communicating through the apertures in the seed disc to the seed mass. The vacuum is of sufficient magnitude such that it tends to draw seeds into the openings defined by the disc and hold the seeds thereto as the seeds are moved through the seed disc under the influence of the moving seed disc toward the seed discharge area of the seed metering mechanism. The openings between the outer surface of the seeds and the periphery of the openings in the disc allow air to pass therethrough thereby maintaining the seeds in operable association with the disc. Because the pressure differential at the seed disc comes from a vacuum source on the opposite side thereof and not from the flow of air at the same side thereof as with positive pressure type seed metering

mechanisms, the problem of having to direct an air flow through the seed mass and on to the seed disc are eliminated.

Despite the various advantages of vacuum seed meters, over seed meters of the positive pressure type or mechanical type, presently known vacuum seed meters are not without problems of their own relative to clean out. Some designs now offer easier and faster clean out of seeds for vacuum style seed meters by providing a hinged door on the vacuum side of the seed meter. These designs have the disadvantage of still having to remove the seed disk in order to allow the seed to be removed. They also do not allow all of the seeds to be removed without having to use your hand or a brush to get 100% cleanout. A collection tray is provided, but since its sized is limited the tray must be emptied several times into a larger container when the hopper is being emptied.

There are other designs which have a cleanout door on the seed side of the seed meter that unlatches and allows the remaining seed in the hopper to flow through the door into a container. However, the door does not allow all of the seed to be removed from the seed meter. In order for all of the seed to be removed, the entire hopper and meter assembly must be removed from the row unit and emptied into a container by tipping it upside down. In addition, the seed vacuum cover must be removed so that all of the seeds can be removed from the meter.

What is needed in the art is a seed meter apparatus and method which allows for a relatively quick and complete cleanout of seeds from the seed meter.

SUMMARY OF THE INVENTION

In accordance with one aspect of the invention, a seed meter is disclosed that includes an input port configured to receive a supply of seeds and an output port configured to deliver the supply of seeds for dispensing to a planting area. The seed meter also includes a seed disk configured to receive the supply of seeds from the input port and deliver the supply of seeds to the output port at a substantially uniform rate. The seed disk has a seed side where seeds flow from the input port, and a vacuum side opposite the seed side. A first housing portion is provided that surrounds a first portion of the seed disk in a fixed relationship to direct the supply of seeds against the seed disk. A second housing portion is also provided that is configured to move between a first position extending to a second portion of the seed disk to operate in concert with the first housing portion to direct the supply of seeds against the seed disk and a second position providing access to at least a portion of the second portion of the seed disk including the lowest most portion of the seed side. A locking mechanism is configured to selectively lock the second housing portion in the first position and unlock the second housing portion from the first position to move to the second portion.

The locking mechanism of the seed meter may also include a clip extending from the second housing portion that is configured to mate with a receptacle mounted to the first housing portion to lock the second housing portion in the first position.

The seed meter may also include at least one hinge connecting the second housing portion to the first housing portion to allow the second housing portion to move between the first position and the second position.

Furthermore, the first housing portion may have an approximately circular outer perimeter and the second housing portion may include an arcing contoured segment configured to substantially complete the approximately circular outer perimeter of the first housing portion when the second housing portion is in the second position.

The seed meter may also include at least one hinge connecting the second housing portion to the first housing portion.

Additionally, the first housing portion may include an approximately circular outer perimeter and the at least one hinge may connect the second housing portion to the first housing portion along a hinge axis extending along a chord of the first housing portion.

The second position of the second housing portion can provide at least tactile access to at least some of the second portion of the seed disk including the lowest most portion of the seed side.

In accordance with another aspect of the invention, an agricultural implement is disclosed that includes a planter including a seed supply element and a seed meter connected to the seed supply element. The seed meter includes an input port configured to receive a supply of seeds and an output port configured to deliver the supply of seeds for dispensing to a planting area. A seed disk is included that is configured to receive the supply of seeds from the input port and deliver the supply of seeds to the output port at a substantially uniform rate. The seed disk has a seed side where seeds flow from the input port, and a vacuum side opposite the seed side. The seed meter further includes a first housing portion surrounding a first portion of the seed disk in a fixed relationship to direct the supply of seeds against the seed disk and a second housing portion. The second housing portion is configured to move between a first position extending to a second portion of the seed disk to operate in concert with the first housing portion to direct the supply of seeds against the seed disk and a second position providing access to at least a portion of the second portion of the seed disk including a lowest most portion of the seed side.

The agricultural implement may also include a locking mechanism configured to selectively lock the second housing portion in the first position and unlock the second housing portion from the first position to move to the second portion.

Also, the first housing may extend over a first side of the seed disk, around a periphery of the seed disk, and over a portion of a second side of the seed disk.

Furthermore, the second housing portion may be configured to mate with the first housing portion in the first position to substantially cover the second side of the seed disk.

The agricultural implement may further include at least one hinge connecting the second housing portion to the first housing portion.

In addition, the first housing portion may have an approximately circular outer perimeter, the at least one hinge connects the second housing portion to the first housing portion along a hinge axis extending along a chord of the first housing portion.

The agricultural implement may also include one of a funnel and a chute connected to the agricultural implement and arranged proximate to the second housing portion to receive seeds not delivered to the output port when the second housing portion is in the second position.

A seed hopper can be connected to the input port of the seed meter to deliver the supply of seeds to the seed meter, and the second position of the second housing portion allows any remaining seeds to empty from the seed hopper.

In accordance with still another aspect of the invention, a method of manufacturing a seed meter is disclosed that includes providing a seed disk having a plurality of seed metering mechanisms to control delivery of a supply of seeds from the seed meter and arranging a first housing portion to

extend the seed disk. The seed disk has a seed side where seeds flow from the input port, and a vacuum side opposite the seed side. The method also includes engaging a second housing portion with the first housing to substantially enclose the seed disk within the first housing portion and the second housing portion. Furthermore, the method includes connecting the second housing portion to the first housing portion through at least one of a hinge and a locking mechanism to adjustably secure the second housing portion in relation to the first housing portion to be movable between a first position engaging the second housing portion to, therewith, substantially surround the seed disk and a second position providing ready access past the second housing portion and through the first housing portion to at least a portion of the seed disk including a lowest most portion of the seed side.

In addition, the step of connecting may include connecting the second housing portion to the first housing portion such that the ready access is provided to at least a periphery of the seed disk.

Also, the step of connecting may include connecting the second housing portion to the first housing portion such that the ready access is provided to a least a portion of the plurality of seed metering mechanisms.

Further still, the step of connecting may include connecting the second housing portion to the first housing portion such that the ready access is provided to a majority of the seed metering mechanisms by rotating the seed disk.

The method may also include forming an input port in at least one of the first housing portion and the second housing portion and forming an output port in at least one of the first housing portion and the second housing portion and, wherein the step of connecting further includes connecting the second housing portion to the first housing portion such that the ready access is provided at least proximate to the output port.

BRIEF DESCRIPTION OF THE DRAWINGS

The above-mentioned and other features and advantages of this invention, and the manner of attaining them, will become more apparent and the invention will be better understood by reference to the following description of embodiments of the invention taken in conjunction with the accompanying drawings, wherein:

FIG. **1** is a fragmentary side view of an embodiment of an agricultural planter including a seed meter according to the present invention;

FIG. **2** is a detailed side view of the seed meter of FIG. **1** with a portion of a housing of the seed meter in a closed position;

FIG. **3**A is a detailed side view of the seed meter FIGS. **1** and **2** illustrating the portion of the housing of the seed meter in an open position and illustrating an associated a seed funnel;

FIG. **3**B is a detailed side view of the seed meter FIGS. **1**-**3**A illustrating an associated seed chute; and

FIG. **4** is a partial, sectional view taken along section line **4**-**4** in FIG. **2**.

Corresponding reference characters indicate corresponding parts throughout the several views. The exemplifications set out herein illustrate one preferred embodiment of the invention, in one form, and such exemplifications are not to be construed as limiting the scope of the invention in any manner.

DETAILED DESCRIPTION OF THE INVENTION

Referring now to the drawings, and more particularly to FIG. **1**, an agricultural implement **10** in the form of a planter generally includes an elongated tool bar **12**, which is supported for movement across and over fields by a plurality of wheels (not shown) and which is adapted to be towed in a given forward direction by a power source, such as an off-highway tractor or some other motive element (all not shown). Attached to tool bar **12** is a plurality of planting units **14** located at spaced intervals along tool bar **12**; with only one being illustrated and described in detail and from which a complete understanding of the present invention may be readily determined. As is well known in the art, the planting units **14** are mounted in side-by-side relation relative to each other along the length of the tool bar **12**.

In the illustrated embodiment, each planting unit **14** preferably includes a conventional furrow opening apparatus **18**. The furrow opening unit **18** preferably includes a pair of lateral spaced furrow opener discs **21**, a furrow forming point, and an opener shoe **24**. Alternatively, and without detracting or departing from the spirit and scope of the present invention, planting unit **14** can be provided with a runner opener type for providing a furrow in the ground. Planting unit **14** further includes a pair of furrow closer discs **26** and a press wheel **28** arranged in fore-and-aft relationship relative to each other.

A seed hopper **30** is likewise carried on each planting unit **14**. The purpose of seed hopper **30** is to provide storage for seed material that is to be gravitationally deposited to the ground as the planting unit moves over and across the field. It will be further appreciated that a hopper container, smaller than that exemplified in the drawings, and connected to a centralized bin or large hopper via a plenum equally suffices without detracting or departing from the spirit and scope of the present invention. In the illustrated embodiment, a seed metering mechanism or apparatus **32** is arranged to receive a supply of seed from the hopper **30** through an input port **31** arranged generally proximate hopper **30**. The purpose of the seed metering apparatus or mechanism **32** is to release seeds received from seed hopper **30** at a generally uniform and/or consistent rate for deposit onto the ground. To facilitate delivery of seeds from the seed metering mechanism **32** to the ground, a vertically disposed seed tube **34** is mounted on the planting unit **14** to receive seeds as they are released from metering mechanism **32** through an output port **35**. In this regard, seed tube **34** defines a vertical passage extending from the output port **35** through which seeds are delivered to the ground.

As the power source or tractor pulls the tool bar **12** across and over the ground, the furrow opening apparatus **18** operates to open a furrow in the ground. Seeds from hopper **30** flow through the input port **31**, into seed metering mechanism **32**, and are moved at a controlled rate through the output port **35** into seed tube **34** to uniformly move through the vertical passage defined by tube **34** onto the ground. Furrow closer **26** trails the furrow opening apparatus **18** and, as implement **10** is drawn across the field, serves to close the furrow together and over the seed dispensed by the seed metering mechanism **32** into the furrow. The trailing press wheel **28** serves to compact the soil closed over the seeds.

Optionally, a pesticide hopper **38** may be mounted toward a rear end of each planting unit **14**. Hopper **38** preferably includes an insecticide or other pesticide, or fertilizer, and is provided with conventional dispensing elements for applying controlled amounts of insecticide or other pesticide where desired in connection with the planting of seeds by each planting unit **14**.

Seed metering apparatus **32** can be mounted to each planting unit **14** or any area suitably mounted for movement over and across the field. Vacuum seed metering mechanism **32** is mounted to and movable with hopper **30** relative to frame

structure **33** of seed planting unit **14** and relative to seed tube **34**. Moreover, hopper **30** can be mounted on and removable from planting unit **14** in a conventional manner.

In accordance with one embodiment, it is contemplated that seed meter **32** may be similar to that disclosed in U.S. Pat. No. 5,842,428, incorporated by reference as if fully set forth herein. In particular, referring now to FIGS. **3A-4**, seed meter **32** includes a seed disk **36** arranged within a housing assembly **37**. In one embodiment, housing assembly **37** of seed meter **32** has a generally cylindrical-like configuration measuring about 300 mm in diameter. As will be described in detail below, housing assembly **37** includes a first, fixed, housing portion **39** surrounding one portion of seed disk **36** and a second, movable, housing portion **40** configured to cover another portion of seed disk **36**. As illustrated in FIGS. **1** and **2**, first housing portion **39** and second housing portion **40** are designed to work in concert to substantially surround seed disk **36**. However, as will be described in detail below, second housing portion **40**, as illustrated in FIGS. **3**A and **3**B, is designed to move relative to first housing portion **39** to provide access past second housing portion **40** and through first housing portion **39** to the seed disk **36**.

In particular, first housing portion **39** and second housing portion **40** are connected through at least one hinge **42**. In this regard, a rotational axis **44** is formed about which second housing portion **40** can rotate relative to first housing portion **39** to move between a first, closed position illustrated in FIGS. **1** and **2**, and a second, open position illustrated in FIGS. **3**A and **3**B. Therefore, second housing portion **40** provides tactile access to the lowest most portion **41** of seed side **54** of seed disk **36**. In contrast, door **47**, which is connected to an upper area of second housing portion **40** near seed input port **31** with hinge **49** and clasp **51**, does not provide tactile access to the lowest most portion **41** of seed side **54** of seed disk **36**.

As will be described, when in the closed position, first housing portion **39** and second housing portion **40** work in concert to direct seeds received by seed meter against seed disk **36**. Specifically, housing assembly **37** can have an approximately circular outer perimeter **43** and, accordingly, second housing portion **40** includes an approximately circular segment contour **45** forming an arc configured to complete circular outer perimeter **43** when in the closed position. In accordance with one embodiment, axis **44** extends along a chord of circular outer perimeter **43** of housing assembly **37**. On the other hand, when in the open position, as shown in FIGS. **3**A and **3**B, access to an interior of the housing assembly **37** is provided to allow an operator at least tactile and, preferably, visual and tactile access to at least a portion of seed disk **36**.

Seed disk **36** includes a plurality of metering mechanisms, generally designated **46**. In particular, in the illustrated embodiment, metering mechanisms **46** include a plurality of fins **48** that extend radially along at least one surface of the seed disk **36**. Additionally, seed metering mechanisms **46** may include through holes **50** in seed disk **36**. As described in U.S. Pat. No. 5,842,428, these metering mechanisms **46** operate to control a supply of seeds from hopper **30** to be dispensed through output port **35** of seed metering mechanism **32** in a generally uniform and/or constant rate. As will be described, when second housing portion **40** is moved into the open position illustrated in FIGS. **3**A and **3**B, access is provided to at least a portion of meter mechanisms **36** to facilitate cleaning thereof.

In the embodiment shown in FIGS. **2-3**B, first housing portion **39** and second housing portion **40** work in concert to form housing assembly **37** that directs the supply of seeds against seed disk **36**. To this end, includes housing assembly **37** defines a perimeter about both a vacuum side **52** and an opposite seed side **54** of seed disk **36**; however, the present invention is not limited to vacuum type seed meters, and can also be used with mechanical type seed meters and positive pressure type of air seed metering mechanism. Additionally, housing assembly **37** defines a perimeter extending about an outer periphery **56** of seed disk **36**. In the illustrated embodiment, as best illustrated in FIG. **4**, first housing portion **39** forms the perimeter extending along vacuum side **52** of seed disk **36**, the perimeter extending about outer periphery **56** of seed disk **36**, and a portion of the perimeter extending along seed side **54**. To this end, second housing portion **40**, when in the closed position, completes the perimeter extending along seed side **54**.

To secure second housing portion **40** in the closed position, a locking mechanism **58** is included. In the illustrated embodiment, locking mechanism **58** includes a clip **60** extending from second housing portion **40** and receptacle **62** secured to first housing portion **39** in position to receive and hold clip **60**. Accordingly, locking mechanism **58** serves to secure second housing portion **40** in the closed position until manual intervention releases locking mechanism **58** and second housing portion **40** is permitted to rotate along an arc **64** extending away from periphery **56** of seed disk **36** to, as described above, provide access to seed disk **36**.

During operation of the illustrated configuration, the seed enters seed meter **32** through input port **31**. Seed disk **36** rotates to drive the seed at a controlled rate through outlet **35**. During this process, seed accumulates on seed side **54** of seed disk **36**, and some of this seed will remain after the operation of seed meter **32** is terminated. If the accumulated (old) seed is not removed, and a different (new) seed is placed in hopper **30**, then the new seed will be contaminated by the old seed. As illustrated, second housing portion **40** covers a lower portion **66** of seed disk **36** along seed side **54**. According, manually rotating second housing portion **40** about axis **44** using hinges **42** provides ready access to the portion **66** of seed disk **36**, including metering mechanisms **41** and the lower most portion of seed disk **36**. An operator can use his or her hands or other tools to clean any seeds and/or debris from the interior of seed meter **32** and, in particular, seed disk **36**, if necessary as in the case where the seeds have a sticky coating or otherwise adhere to the seed meter housing or seed disk. However, the L-shaped lip at the lower extent of housing portion **40**, can be designed as shown in FIG. **4** such that when it swings away and seed on seed side **54** gravitationally empties into the funnel or chute. Additionally, any remaining seeds in seed hopper **30** also fall into input port **31** and subsequently empty from seed meter **32**. Furthermore, by manually rotating seed disk **35** one can access the majority of seed side **54** of seed disk **36** to perform a substantially total cleanout of seed meter **32** and seed hopper **30**.

Additionally, it is contemplated that a funnel **68** connected to agricultural implement **10** and positioned in proximity to second housing portion **40** when in the closed position. To this end, funnel **68** can be attached to frame **33** or other parts of implement **10** and/or attached to seed meter **32** at a variety of locations using fasteners such as nuts and bolts, screws, rivets, etc.; hooks, clips, flanges on the funnel, weldments and other fastening elements and/or combinations thereof, and can be made of sheet metal, plastic, or other materials. Alternatively, funnel **68** can be freestanding. When second housing portion **40** is in the open position, as illustrated in FIG. **3**A, any accumulated remaining seeds or seed residue flows and/or can be otherwise removed from housing assembly **37**, seed

disk **36** and hopper **30** by allowing them to flow, or brushing them, into funnel **68**, which directs the cleaned out seeds into a collection container **70**.

Alternatively, referring to FIG. **3**B, funnel **68** can be replaced with a chute **72**. As with funnel **68**, chute **72** can be attached to frame **33** or other parts of implement **10** and/or attached to seed meter **32** at a variety of locations using fasteners such as nuts and bolts, screws, rivets, etc.; hooks, clips, flanges on the chute, weldments and other fastening elements and/or combinations thereof, and can be made of sheet metal, plastic, or other materials. Alternatively, chute **72** can be freestanding.

It is contemplated that second housing portion **40** can be located in any of a variety of locations. For example, a second housing portion similar to second housing portion **40** can be hinged at one end such that it swings downwardly with a clasp at the other end for closing during operation. Additionally, the present invention can include a second housing portion located at a lower extent of the housing and which extends on either side of the housing and which also swings downwardly. In yet another configuration, it is contemplated that a lower lip is formed that protrudes from the housing assembly **32** at an approximately 45°, or other, downward angle towards a hinged housing part, which could be straight instead of L-shaped, thus allowing the remaining seeds to flow freely from the seed meter **32**.

While example embodiments and applications of the present invention have been illustrated and described, including a preferred embodiment, the invention is not limited to the precise configuration and resources described above. Various modifications, changes, and variations apparent to those skilled in the art may be made in the arrangement, operation, and details of the methods and systems of the present invention disclosed herein without departing from the scope of the claimed invention.

I claim:

1. A method of manufacturing a seed meter, comprising the steps of:

providing a seed disk having a plurality of seed metering mechanisms to control delivery of a supply of seeds from the seed meter, the seed disk having a seed side where seeds flow from the input port, and a vacuum side opposite the seed side;

arranging a first housing portion to extend the seed disk, the seed disk housing having a seed side where seeds flow from the input port, and a vacuum side opposite the seed side; the first housing portion partially defining a housing for receiving the seed disk therein;

engaging a second housing portion with the first housing to substantially enclose the seed disk within the first housing portion and the second housing portion; and

connecting the second housing portion pivotably connected to the first housing portion through at least one of a hinge and a locking mechanism to adjustably secure the second housing portion in relation to the first housing portion to be movable between a first position engaging the second housing portion to, wherein the second housing portion extends about the seed disk and further defines a portion of the housing so as to operate in concert with the first housing portion to direct the supply of seeds against the seed side of seed disk therewith, substantially surround the seed disk and a second position providing ready access past the second housing portion and through the first housing portion to at least a portion of the seed disk including a lowest most portion of the seed side of seed disk through the housing.

2. The method of claim **1**, wherein the step of connecting further includes connecting the second housing portion to the first housing portion such that the ready access is provided to at least a periphery of the seed disk.

3. The method of claim **1**, wherein the step of connecting further includes connecting the second housing portion to the first housing portion such that the ready access is provided to a least a portion of the plurality of seed metering mechanisms.

4. The method of claim **3** wherein the step of connecting further includes connecting the second housing portion to the first housing portion such that the ready access is provided to the seed metering mechanisms by rotating the seed disk.

5. The method of claim **3** further comprising forming an input port in at least one of the first housing portion and the second housing portion and forming an output port in at least one of the first housing portion and the second housing portion and, wherein the step of connecting further includes connecting the second housing portion to the first housing portion such that the ready access is provided at least proximate to the output port.

* * * * *