US 20080094256A1

(19) United States

(12) Patent Application Publication

(10) Pub. No.: US 2008/0094256 A1

(43) Pub. Date: Apr. 24, 2008

Koen

(54) DYNAMICALLY CONFIGURABLE WIRELESS DEVICE

(75) Inventor: **Robert John Koen**, Vancouver (GB)

Correspondence Address:
WebTech Wireless Inc.
Attention Patent Department, Norman Eldridge
215 - 4299 Canada Way
Burnaby, BC V5G 1H3

(73) Assignee: **Webtech Wireless Inc.**

(21) Appl. No.: **11/585,149**

(22) Filed: **Oct. 24, 2006**

Publication Classification

(51) **Int. Cl.**
G08G 1/123 (2006.01)
G08B 1/08 (2006.01)

(52) **U.S. Cl.** **340/988**; 340/539.13

(57) **ABSTRACT**

A wireless device for facilitating for GPS-based asset tracking via a wireless communications network and a centralized management system. The wireless device includes dynamically configurable event profiles which allow the wireless device to be dynamically reconfigured and to perform certain actions based on a dynamically configurable combination of received events.

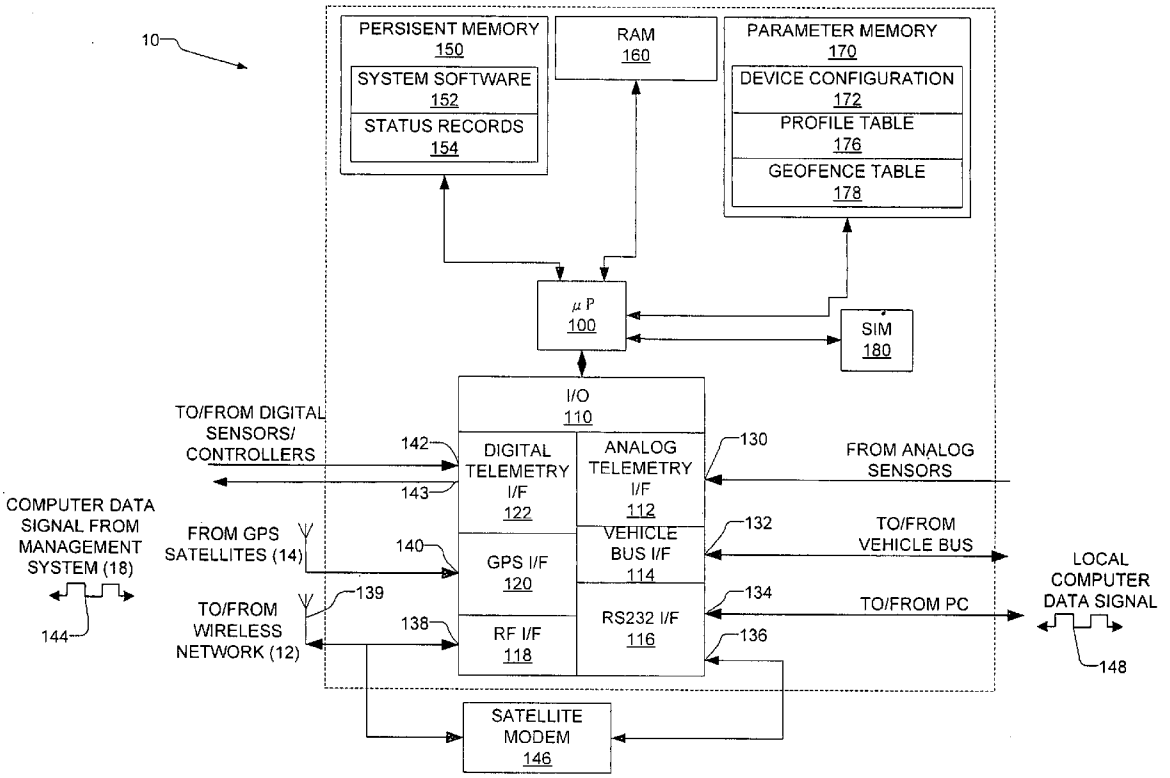

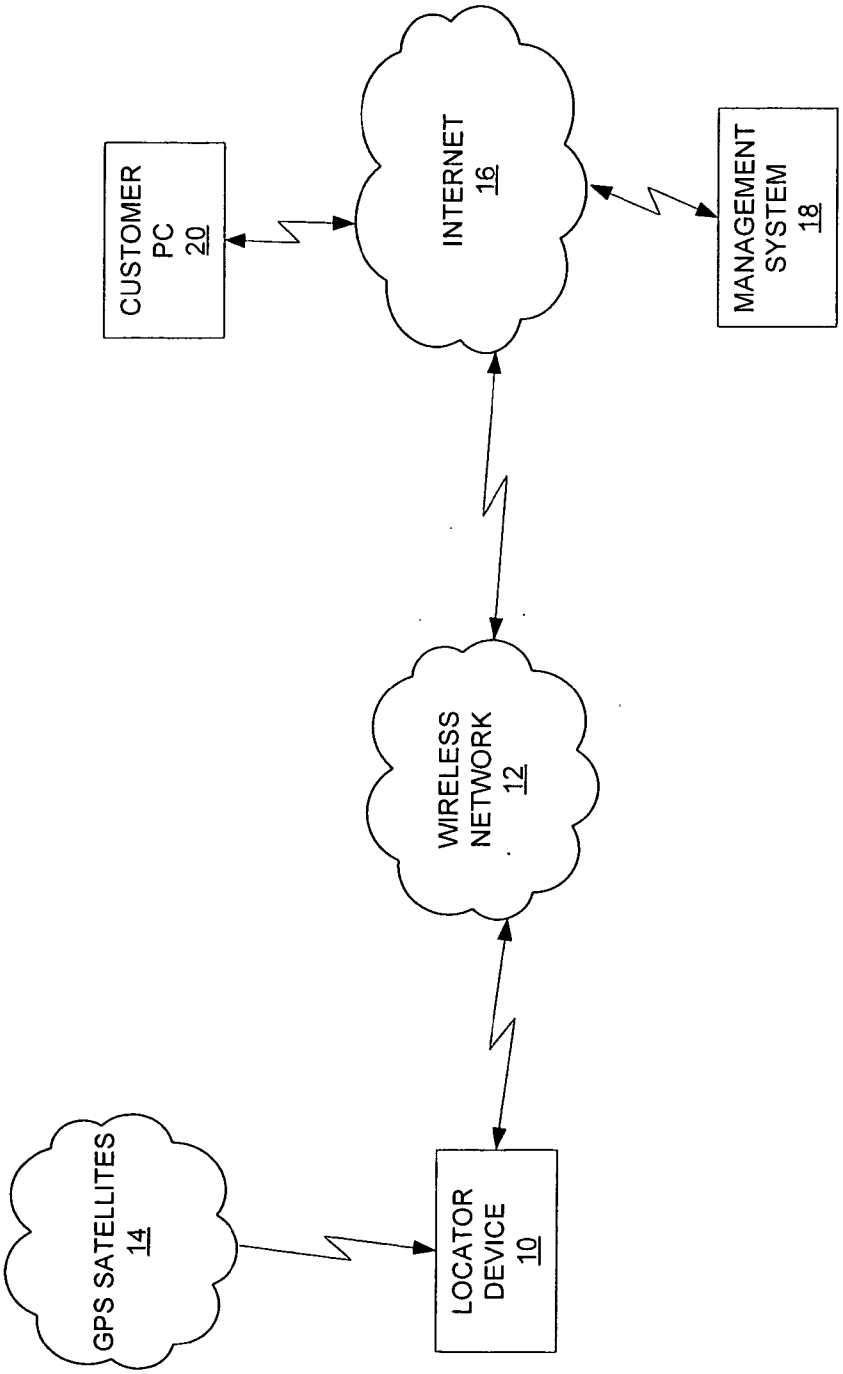
GPS SATELLITES
14
LOCATOR
DEVICE
10
WIRELESS
NETWORK
12
CUSTOMER
PC
20
INTERNET
16
MANAGEMENT
SYSTEM
18

FIG. 1

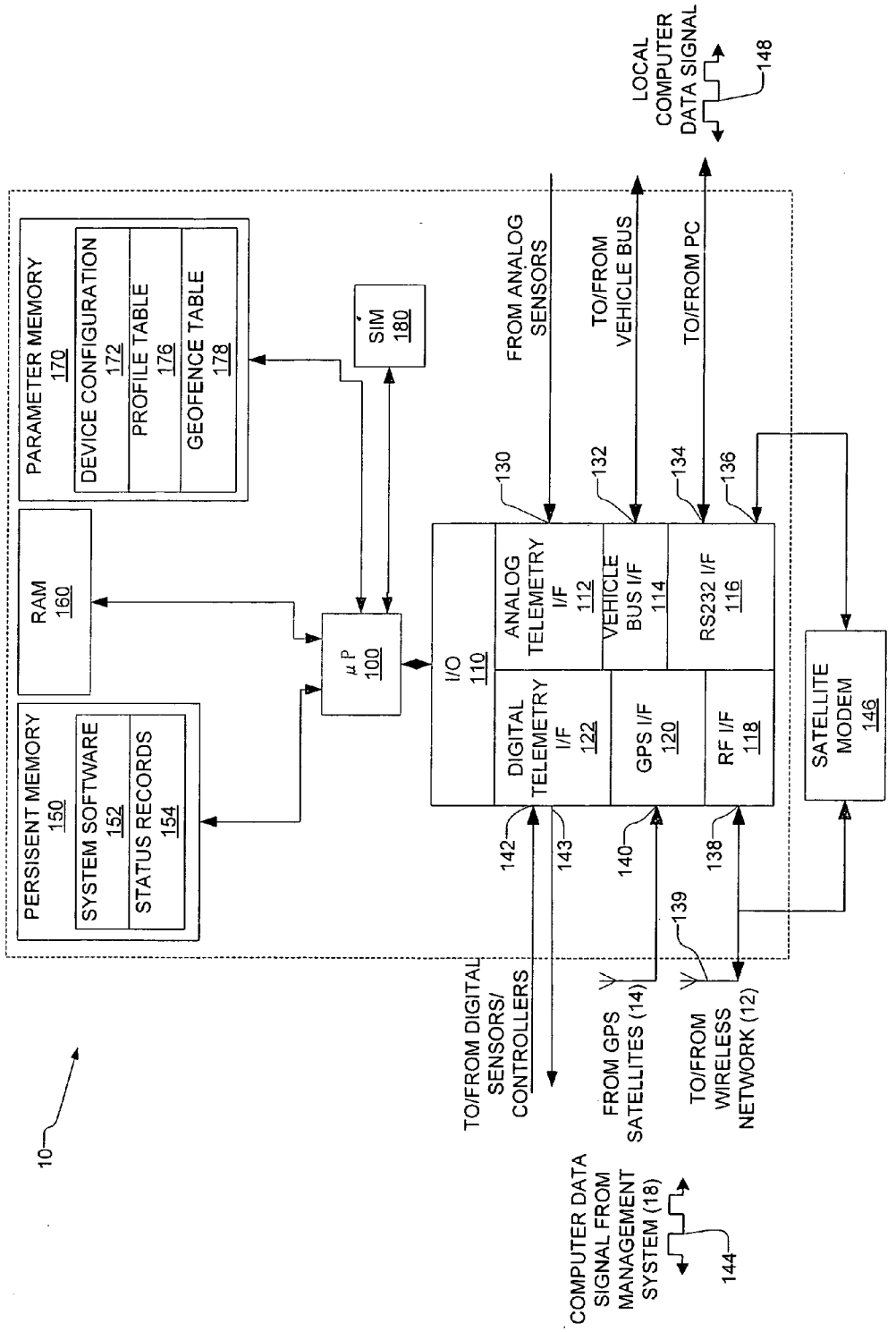
PARAMETER MEMORY 170
DEVICE CONFIGURATION 172
PROFILE TABLE 176
GEOFENCE TABLE 178
RAM 160
PERSISENT MEMORY 150
SYSTEM SOFTWARE 152
STATUS RECORDS 154
μP 100
SIM 180
I/O 110
ANALOG TELEMETRY I/F 112
VEHICLE BUS I/F 114
RS232 I/F 116
DIGITAL TELEMETRY I/F 122
GPS I/F 120
RF I/F 118
SATELLITE MODEM 146
FROM ANALOG SENSORS
TO/FROM VEHICLE BUS
TO/FROM PC
LOCAL COMPUTER DATA SIGNAL
148
130
132
134
136
142
143
140
138
139
TO/FROM DIGITAL SENSORS/ CONTROLLERS
FROM GPS SATELLITES (14)
TO/FROM WIRELESS NETWORK (12)
COMPUTER DATA SIGNAL FROM MANAGEMENT SYSTEM (18)
144
10

FIG. 2

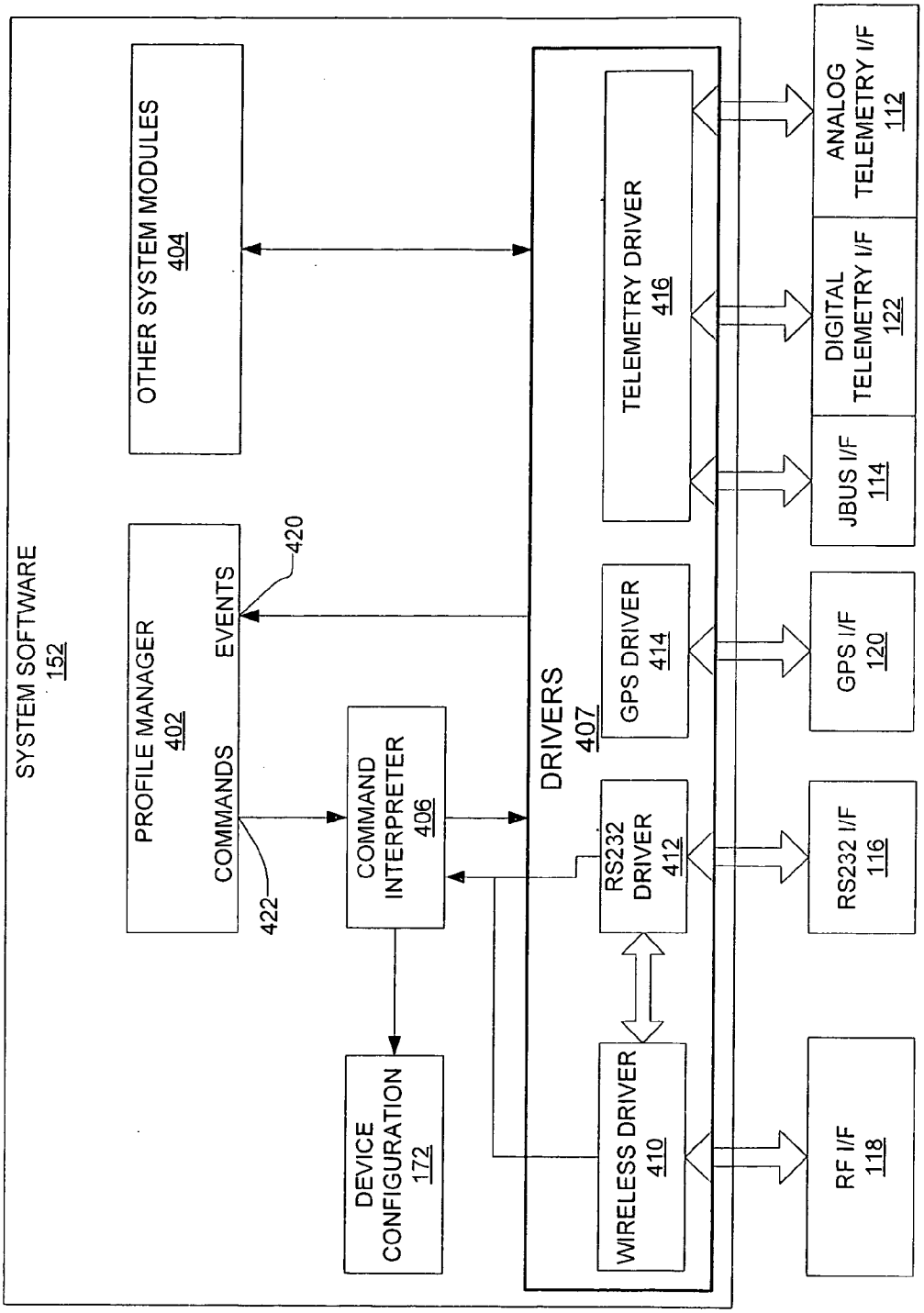
SYSTEM SOFTWARE
152
OTHER SYSTEM MODULES
404
PROFILE MANAGER
402
EVENTS
COMMANDS
420
422
COMMAND INTERPRETER
406
DEVICE CONFIGURATION
172
DRIVERS
407
TELEMETRY DRIVER
416
GPS DRIVER
414
RS232 DRIVER
412
WIRELESS DRIVER
410
ANALOG TELEMETRY I/F
112
DIGITAL TELEMETRY I/F
122
JBUS I/F
114
GPS I/F
120
RS232 I/F
116
RF I/F
118

FIG. 3

500

200

PROFILE TABLE ENTRY FORMAT

202 ~ PROFILE NUMBER	Entry Number
204 ~ T_WORD	Binary word indicating triggers used in the entry
206 ~ T_MASK	Binary word indicating sufficient and necessary triggers
208 ~ P_HYSTERESIS	Minimum duration all triggers must be active to activate profile
210 ~ COMMANDS	Device configuration commands associated with the profile
212 ~ TIMER_START	Hysteresis timer start time
214 ~ P_ACTIVE	Boolean flag indicating if profile is currently active

FIG. 4

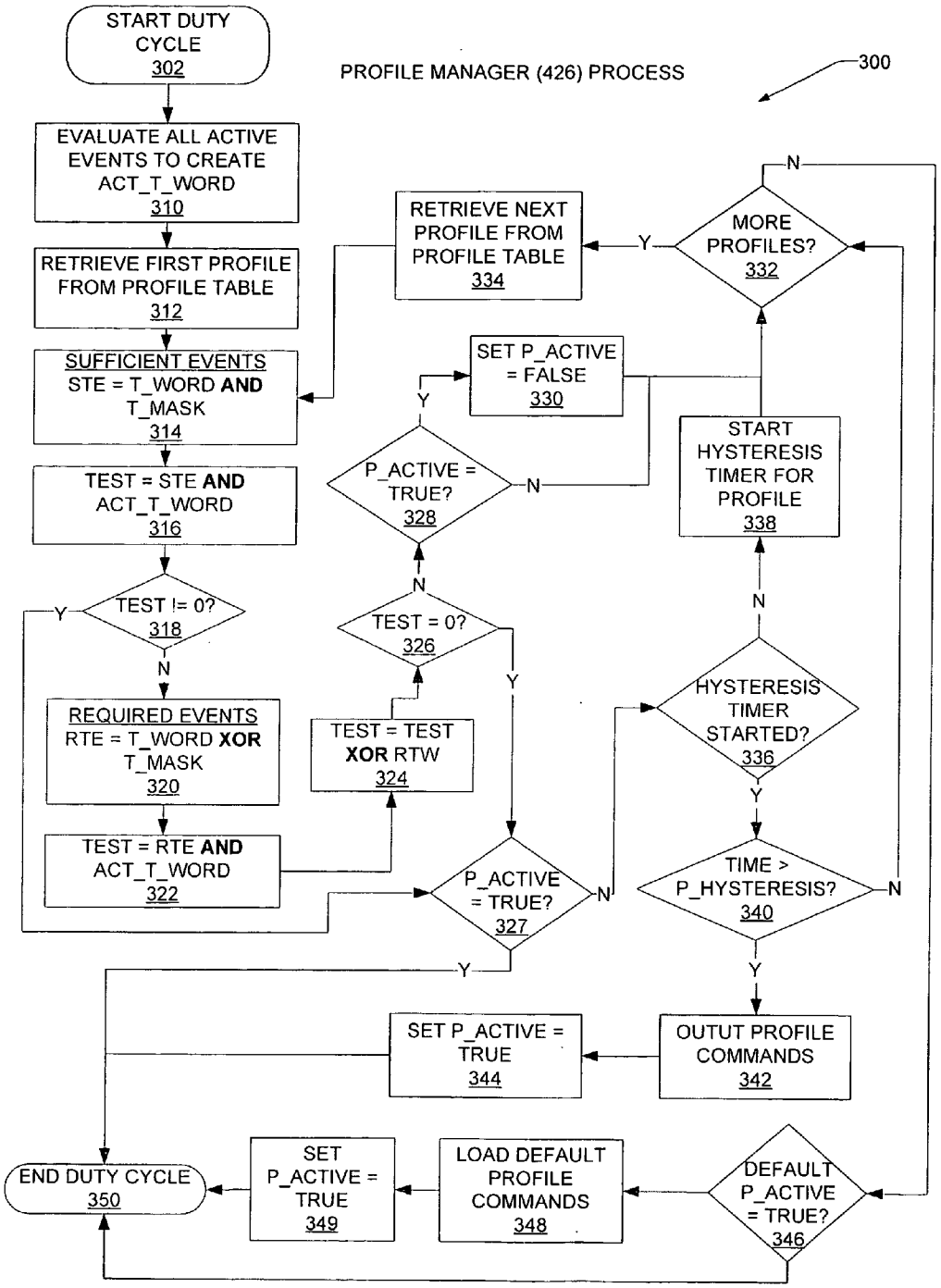
START DUTY CYCLE 302
PROFILE MANAGER (426) PROCESS
300
EVALUATE ALL ACTIVE EVENTS TO CREATE ACT_T_WORD 310
RETRIEVE FIRST PROFILE FROM PROFILE TABLE 312
SUFFICIENT EVENTS STE = T_WORD AND T_MASK 314
TEST = STE AND ACT_T_WORD 316
TEST != 0? 318
REQUIRED EVENTS RTE = T_WORD XOR T_MASK 320
TEST = RTE AND ACT_T_WORD 322
TEST = TEST XOR RTW 324
TEST = 0? 326
P_ACTIVE = TRUE? 328
SET P_ACTIVE = FALSE 330
P_ACTIVE = TRUE? 327
RETRIEVE NEXT PROFILE FROM PROFILE TABLE 334
MORE PROFILES? 332
START HYSTERESIS TIMER FOR PROFILE 338
HYSTERESIS TIMER STARTED? 336
TIME > P_HYSTERESIS? 340
OUTUT PROFILE COMMANDS 342
SET P_ACTIVE = TRUE 344
DEFAULT P_ACTIVE = TRUE? 346
LOAD DEFAULT PROFILE COMMANDS 348
SET P_ACTIVE = TRUE 349
END DUTY CYCLE 350
Y
N

FIG. 5

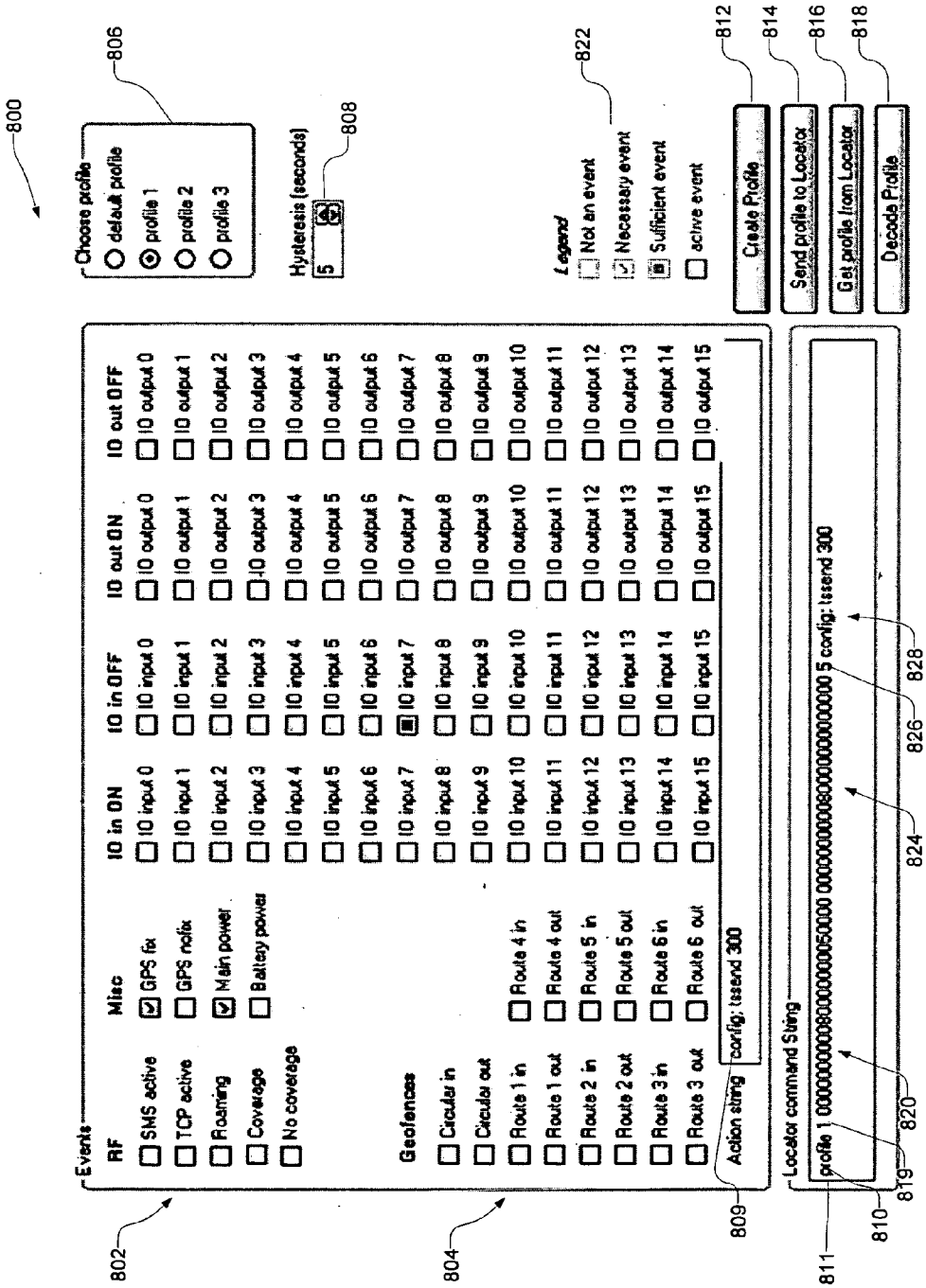
800
Choose profile
default profile
profile 1
profile 2
profile 3
806
Hysteresis (seconds)
5
808
Legend
Not an event
Necessary event
Sufficient event
active event
822
Create Profile
Send profile to Locator
Get profile from Locator
Decode Profile
812
814
816
818
Events
RF
SMS active
TCP active
Roaming
Coverage
No coverage
Misc
GPS fix
GPS notfix
Main power
Battery power
IO in ON
IO in OFF
IO out ON
IO out OFF
Geofences
Circular in
Circular out
Route 1 in
Route 1 out
Route 2 in
Route 2 out
Route 3 in
Route 3 out
Route 4 in
Route 4 out
Route 5 in
Route 5 out
Route 6 in
Route 6 out
Action string
config; tssend 300
Locator command String
profile 1 0000000000800000000500000 0000000000800000000000000 5 config; tssend 300
802
804
809
810
811
819
820
824
826
828

FIG. 6

DYNAMICALLY CONFIGURABLE WIRELESS DEVICE

FIELD OF THE INVENTION

[0001] This invention relates to the field of wireless asset tracking and fleet operations management.

BACKGROUND OF THE INVENTION

[0002] Ever since the advent of ubiquitous wireless networks and GPS satellites, specialized wireless devices have been installed in vehicles to facilitate fleet operations management and in virtually anything that moves or is moved to enable asset tracking. In the art, such devices are commonly called "locator devices", referencing their basic functionality of locating and reporting a physical position of a vehicle, trailer or any asset. However, functionality of the locator devices is not limited to merely location tracking. The locator devices interface with many kinds of other devices and systems to collect information and data and to control operation of external systems. Although typically intended to be used with wireless networks to communicate with a centralized management system, the locator devices are also typically capable of independent operation in an event of a network failure, for example. In such situations, instead of immediate reporting, the locator devices typically operate according to pre-defined rules and/or store the information they gather in local memory.

[0003] When used by fleet operators, the locator devices provide a wealth of useful functions such as efficient vehicle scheduling, dispatching and location management, monitoring driver behaviour and compliance with traffic rules and government regulations, fuel tax recovery, detailed time tracking, and enhanced driver services such as real-time mapping, Internet access, credit card processing, and many others.

[0004] In other applications, locator devices of all kinds are often used to track high-value assets ranging from cars and construction equipment to pallet shipments and even small packages.

[0005] The use of locator devices in such a variety of applications naturally imposes a myriad of different requirements, both physical (e.g., size, power consumption, processing speed, storage capacity, etc.), and operational (e.g., software functionalities for monitoring, tracking, recording, controlling, etc.). Furthermore, even a single locator device, used for a single application, while having a single set of physical specifications, may have different functional requirements depending on the particular mode or location of use.

[0006] To date, manufacturers of the locator devices have not adequately overcome these limitations. Specifically, while varying physical requirements have been usually met by designing the locator devices for a specific market (for example to be installed in vehicles or containers), the only solution to the varying functional requirements has been to develop custom software and firmware loads for each customer and/or application. There are many disadvantages to that solution: design and support costs requirement to develop and maintain a multitude of software streams; slow request-to-implementation time as any requested feature has to be integrated into existing software and the entire fleet of devices has to be upgraded; and lack of flexibility as each locator device can only operate a single feature set at any one time. Furthermore, this cumbersome approach did not solve the issue of a single locator device, which may have different operational profiles not based on the customer who is using it, but on a more transient quality such as where the locator device may be located or what the vehicle or asset with that locator device is doing at that time.

SUMMARY OF THE INVENTION

[0007] A method of dynamically operating a locator device, including the steps of defining a plurality of events where each of the events represents an operational status of the locator device. The method including the step of defining a plurality of triggers where each of the triggers is a dynamically configurable contemporaneously occurring combination of the events and defining a plurality of event profiles where each of the event profiles is a user-configurable dynamic association between one of the triggers; and a dynamically configurable set of device commands. The method further including responding to a contemporaneously occurring subset of the events by evaluating the contemporaneously occurring subset of the events against the triggers of each of the event profiles and activating one of the event profiles by processing the set of device commands corresponding to the event profile whenever the contemporaneously occurring subset of the events corresponds to the trigger of the event profile

[0008] A dynamically operable locator device comprising a definition of a plurality of events where each of the events represents an operational status of the locator device, a definition a plurality of triggers where each of the triggers is a dynamically configurable contemporaneously occurring combination of the events, and a definition a plurality of event profiles where each of the event profiles is a user-configurable dynamic association between one of the triggers and a dynamically configurable set of device commands. The device further comprising means for responding to a contemporaneously occurring subset of the events by evaluating the contemporaneously occurring subset of the events against the triggers of each of the event profiles and means for activating one of the event profiles by processing the set of device commands corresponding to the event profile whenever the contemporaneously occurring subset of the events corresponds to the trigger of the event profile.

BRIEF DESCRIPTION OF THE DRAWINGS

[0009] A better understanding of the present invention can be obtained when the following detailed description of the preferred embodiment is considered in conjunction with the following drawings, in which:

[0010] FIG. **1** is a high level diagram of a prior art wireless communication system.

[0011] FIG. **2** is a block diagram of a dynamically configurable locator device according to one embodiment of the invention.

[0012] FIG. **3** is a block diagram of a System Software module of the dynamically configurable locator device shown in FIG. **2**.

[0013] FIG. **4** is a high level diagram illustrating a format of entries in a Profile Table stored in the dynamically configurable locator device shown in FIG. **2**.

[0014] FIG. **5** is a flowchart illustrating the operation of a Profile Manager process running as a module of the System Software shown in FIG. **3**.

[0015] FIG. 6 is an illustration of a software profile configuration tool according to one embodiment of the invention.

DETAILED DESCRIPTION OF THE PREFERRED EMBODIMENT

[0016] Notice Regarding Copyrighted Material

[0017] A portion of the disclosure of this patent document contains material which is subject to copyright protection. The copyright owner has no objection to the facsimile reproduction by anyone of the patent document or the patent disclosure as it appears in the Patent and Trademark Office file or records, but otherwise reserves all copyright rights whatsoever.

[0018] Wireless Communication System

[0019] Referring to FIG. 1, a wireless communication system according to one embodiment of the invention is shown. The wireless communication system comprises a plurality of locator devices 10, a wireless network 12, a plurality of GPS satellites 14, the Internet 16, a Management System 18, and a plurality of customer computers 20. The locator device 10 is a wireless communication device, commonly installed in a vehicle or a trailer to provide location-based communication services such as, for example, asset tracking and reporting, Internet access, voice and text communications, and telemetry monitoring or control. Devices such as the locator devices 10, albeit not containing the novel elements recited and claimed herein, are well known in the art. For example, WebTech Wireless Inc., of Burnaby, British Columbia, produces and markets several models of the locator devices 10 under the trademark WebTech Locator™. In one embodiment, the locator devices 10 obtain position information from the GPS satellites 14 via integrated or external GPS modems and antennas (not shown). Methods and apparatuses for obtaining GPS-based location information are well known in the art. For example, WebTech Locator™ devices mentioned above include integrated GPS modems. The locator devices 10 are connected to the wireless communication network 12, which may be any available cellular, satellite, microwave or radio communication network based on any communication standard such as, for example, GSM, GPRS, CDMA, CDPD or WiFi. Modes and methods of interconnection to such wireless communication networks are well known in the art and are not further described herein. The Management System 18 is also connected to the wireless network 12 via the Internet 16. The Management System 18 provides portal-based locator device 10 management functions, such as remote device configuration and upgrades, data bridging, device monitoring, tracking and reporting, to Management System subscribers. The Management System 18 is well known in the art and is not described further herein. For example, WebTech Wireless Inc. of Burnaby, British Columbia, produces and markets a Management System under the name Quadrant Vehicle Services System™. In order to utilize the locator device 10 management functions provided by the Management System 18, the subscribers of the Management System 18 access the Management System from PCs 20 using web browsers (not shown) or any another remote access method known in the art

[0020] Locator Device

[0021] Referring now to FIG. 2, the locator device 10 is shown in detail at 99 according to one embodiment of the invention. The locator device 10 comprises a microprocessor 100, an I/O interface 110, a persistent memory 150, a RAM 160, a parameter memory 170, and a Subscriber Identity Module (SIM) 180. The functionality of these modules is described below.

[0022] I/O

[0023] Still referring to FIG. 2, the I/O interface 110 enables communications between the locator device 10 and other devices, integrated or external. The I/O interface 110 includes a plurality of telemetry interfaces. Specifically, I/O interface 110 includes an analog telemetry interface 112, a digital telemetry interface 122, a vehicle bus interface 114, an RS232 interface 116, a radio (RF) interface 118, and a GPS interface 120. The analog telemetry interface 112 provides a connection 130 to a plurality of analog sensors (not shown) which generate variable voltage signals to indicate their status. A common example of an analog sensor is a thermometer (not shown), which outputs temperature measurements as a voltage-graduated analog signal. The analog telemetry interface 112 further includes an analog-to-digital (A/D) converter (not shown), which converts received analog signals to their digital representations that can be further processed by the microprocessor 100. The operation of A/D converters is well-known in the art and is not described further herein. The digital telemetry interface 122 provides a bidirectional connection to devices which generate, or are controlled by, digital signals. More specifically, the digital telemetry interface 122 includes a plurality of digital inputs 142 and plurality of digital outputs 143. A common example of a device connected to the digital input 142 is a door-mounted sensor which generates a logic HIGH signal when a door opens. A common example of a device connected to the digital output 143 is a relay which controls some operational aspect of a vehicle in which it is installed, for example, disabling the vehicle's fuel pump upon receiving a logic HIGH signal from the digital telemetry interface 122. The vehicle bus interface 114 provides a bidirectional connection 132 to various vehicle systems, for example J1587/J1708, OBD II or CANBUS compliant systems.

[0024] Still referring to FIG. 2, the GPS interface 120 enables receiving GPS location information from the GPS satellites 14 through a GPS antenna 141. A person skilled in the art will appreciate that the GPS interface 120 may comprise an integrated or external GPS receiver and may further utilize any appropriate GPS antenna type. For example, the WebTech 6000 Locator™, from WebTech Wireless Inc. of Burnaby, British Columbia, integrates a GPS receiver and is typically equipped with an external active GPS antenna. The RF interface 118 provides a wireless connection 118 to the wireless network 12 via a radio antenna 139. For example, the WebTech 6000 Locator™ device integrates a GSM/GPRS modem which can connect to any available GSM/GRPS network. The RF interface 118 is further used to receive a remote computer data signal 144 from the Management System 18. The RS232 interface 116 provides a primary serial connection 134 and a secondary serial connection 136. The primary serial connection 134 typically connects to a computer or a navigation system co-located with the locator device 10. The primary serial connection 134 can be used for a variety of purposes, such as for local management of the locator device 10 via a laptop connected thereto that generates a local computer data signal 148 containing device commands. The meaning of the term 'device commands' will be described below. In another example, the primary serial connection 134 can be con-

nected to an in-vehicle navigation system to output thereto mapping and location information received from the Management System **18** and the GPS satellites **14** via the RF interface **118** and the GPS interface **120**, respectively. The secondary serial connection **136** can be used to connect to a communication device, such as a satellite modem **146**, to provide a primary or a backup connection to the wireless network **12** via the radio antenna **139** or another antenna (not shown) appropriate for the specific type of wireless network **12** and the connection method used. In one embodiment of the invention, should the RF interface **118** or the primary wireless network **12** become unavailable, the secondary serial connection **136**, via the satellite modem **146**, can be used to a re-establish a connection to the Management System **18** via a satellite communication network.

[0025] A person skilled in the art will appreciate that the interfaces comprising the I/O **110** described above are merely examples of possible configurations of the locator device **10**. A variety of interfaces, connections, and signals may be implemented in the locator device **10** as may be appropriate for a particular application.

[0026] Memory

[0027] Still referring to FIG. **2**, the persistent memory **150** is a non-volatile memory which contains System Software **152** and a database of status records **154**. The database of status records **154** is used to log and store all measurements and events received, processed or generated by the locator device **10**. The number of status records stored in the database of status records **154** is limited only by the size of the non-volatile persistent memory **150** installed in the locator device **10**. The System Software **152** comprises a collection of computer encoded instructions, which direct the microprocessor **100** to perform functions of the locator device **10**. The System Software **152** will be described in further detail below in reference to FIG. **3** and FIG. **6**.

[0028] Still referring to FIG. **2**, the RAM **160** is used by the locator device **10** to store various information of a temporary nature. Operation of the RAM **160** is well known in the art and will not be further described herein.

[0029] Still referring to FIG. **2**, the parameter memory **170** is a non-volatile memory which contains a device configuration **172**, a Profile Table **176**, and a Geofence Table **178**. The device configuration **172** is used to store a plurality of operational parameters which define all dynamically configurable operational aspects of the locator device **10**. A person skilled in the art will appreciate that the particular operational parameters for each type of the locator device **10** depend on the specific implementation and functionality of the locator device. The device configuration **172** can also be modified by the Management System **18**, by a user operating a terminal connected to the primary serial connection **134**, or by the System Software **152** in response to occurrence of certain events. The Profile Table **176** contains a plurality of event profiles which are used to dynamically respond to events by performing certain actions or changing the device configuration **172**. The meaning of the terms 'events' and 'actions' will be described below.

[0030] Still referring to FIG. **2**, the Geofence Table **178** defines a plurality of geofences configured on the locator device **10**. A geofence is a virtual boundary that can be configured on the locator device **10** using GPS co-ordinates. Geofences are typically configured on the locator device **10** by using device commands that are automatically generated by a software geofence configuration tool (not shown). A geofence can define any area, for example, a work site, customer site, yard, home depot, area that should not be traveled through (exclusion fence), or any other type of area. As will be described further below, when, based on the location information received from the GPS satellites **14**, the locator device **10** enters or leaves a geofence area, an event is generated and actions can be taken or device configuration **172** altered. There are generally three types of geofences that can be configured on the locator device **10** in the Geofence Table **172**. The first type is a polygon geofence created by drawing a polyon enclosing a desired area on a map. The second type is a route geofence, a virtual boundary created along a designated route, which may span several hundred miles or kilometres. For example, the route geofence can be created along a tow truck operator's "Beat", or an armored truck route along a stretch of highway between cities. The third type is a circular geofence that is created by defining a center location and a radius.

[0031] Still referring to FIG. **2**, the SIM **180** is used to store information that identifies the locator device **10** to the wireless network **12**. The use of SIM **180** is well known in the art and will not be further described herein. A person skilled in the art will appreciate that, depending on the type of the wireless network **12** used with the particular locator device **10**, a different method for identification of the locator device to the wireless network may be used.

[0032] A person skilled in the art will appreciate that while the described embodiment uses the microprocessor **100** and memory modules **150**, **160**, **170** and **180**, the locator device **10** may also be implemented using FPGA or ASIC technologies as alternative methods of encoding, storing and/or processing instructions which define the locator device operation. The choice of technology, i.e., microprocessor, FPGA, ASIC, virtual machine, or any other, will depend on the particular device functionality desired and on the cost, manufacturing, and other application constraints.

[0033] System Software

[0034] Referring to FIG. **3**, key aspects of the System Software **152** are shown in greater detail according to one embodiment of the invention. The System Software **152** comprises a number of functional components including a Profile Manager **402** and Other System Modules **404** for implementing the functionality of the locator device **10**, a Command Interpreter **406** for managing the operation of the locator device, and Drivers **407** for controlling the interfaces **112**, **116**, **118**, **120** and **122** of the I/O **110**. The Profile Manager **402** receives events from the drivers **407** via an event input **420**, processes the events according to triggers (as will be described below) to determine what event profile needs to be activated and what device commands need to be output to the Command Interpreter **406** via a command output **421**. The Command Interpreter **406** provides a management interface to the locator device **10** by interpreting device commands to cause the locator device to perform actions or to change the device configuration **172** as specified in the commands. The device commands interpreted by the Command Interpreter **406** can be received in the local computer data signal **148** from a local computer terminal, in the remote computer data signal **144** from the Management System **18**, or via the command output **421** from the Profile Manager **402**. The operation of the Profile Manager **402** and the meaning of the terms 'events', 'triggers', 'event profiles' and 'actions' will be described below. Well known aspects of

the locator device **10** are implemented in the Other System Modules **404** and are not further described herein.

[0035] Drivers

[0036] Still referring to FIG. **3**, in the described embodiment of the invention, the drivers **407** include a wireless driver **410**, an RS232 driver **412**, a GPS driver **414**, and a telemetry driver **416**. The wireless driver **410** enables communications to/from the wireless network **12** via the RF interface **118**. In addition to enabling network-specific communication functions, the wireless driver **410** further enables transmitting and receiving the remote computer data signal **144** to and from the Management System **18** via the wireless network **12** (see FIG. **2**). Where the remote computer data signal **144** contains device commands, they are forwarded by the wireless driver **410** to the Command Interpreter **406**. The RS232 driver **412** enables communications to and from a local computer or data terminal via the primary serial connection **134**, and to/from a satellite network via the satellite modem **146** connected to the secondary serial connection **136** as previously described in reference to FIG. **2**. As device commands may be received via either of the serial connections **134** and **136**, the RS232 driver **412** forwards any received device commands to the Command Interpreter **406**. The GPS driver **414** enables communication with the GPS interface **120** for receiving position information from the GPS satellites **14** as was previously described in reference to FIG. **2**. The telemetry driver **416** enables communication to and from the vehicle bus interface **114**, the digital telemetry interface **122** and the analog telemetry interface **112** and devices connected thereto. The telemetry driver **416** controls all operational aspects of these interfaces (**112**, **114**, **122**) enabling digital and analog output, and analog input via the A/D converter described above in reference to FIG. **2**. In some embodiments of the invention, the telemetry driver **416** may further enable advanced functions such as connection to a digital handset for voice communications through the locator device **10**. A person skilled in the art will appreciate that the drivers **407** described herein are well known in the art and do not limit the function or the spirit of the invention as they may be implemented to enable any functionality required for a particular application of the locator device **10**.

[0037] Events, Triggers, Configuration Commands and Profiles

[0038] As described above, the Profile Manager **402** and the Command Interpreter **406** modules of the System Software **152** control the operation of the locator device **10** by processing event profiles, events, triggers, device commands, configuration parameters and actions. The terms 'event profiles', 'events', 'triggers', 'device commands', 'configuration parameters' and 'actions' in the context of this embodiment, are explained below.

[0039] An event profile is a user-configurable dynamic association between (a) events and (b) device commands that represent actions and/or configuration parameters. More specifically, in the described embodiment, event profiles are stored in the Profile Table **176** in the format that will be described below in reference to FIG. **5**. Each event profile has a trigger, which is a dynamically configurable combination of events against which contemporaneous occurring events are evaluated to determine whether the event profile should become active. Each event profile also has a dynamically configurable collection of device commands which are output to the Command Interpreter **406** to implement the actions and/or configuration parameters associated with the active profile.

[0040] An event is an operational condition of the locator device **10**. A list of events, according to one embodiment of the invention, is shown in Table 1 below. By way of explanation, it can be noted that geofence crossing events (**6-11** and **14-19**) can correspond to either polygon or route geofences stored in the Geofence Table **178**. In this embodiment of the invention, a single circular geofence is implemented and its information is also stored in the Geofence Table **178**. However, a person skilled in the art will appreciate that any number of any type of geofences may be configured on the locator device **10** limited only by the specifications of the device itself and requirements of a specific application. As will be described further below, the Profile Manager **402** accepts events as inputs and evaluates them according to event profile triggers to determine which event profile stored in the Profile Table **176** should be activated.

[0041] A trigger is a dynamically configurable Boolean combination of events, which, in one embodiment of the invention, will cause the Profile Manager **402** to activate an event profile stored in the Profile Table **176**. The triggers may be dynamically configured, i.e., the combination of events defined by device commands issued to the Command Interpreter **406** by (a) users via the primary serial connection **136** or via the Management System **18**, or (b) issued automatically by the Profile Manager **402** as a consequence of event processing. A person skilled in the art will appreciate that non-Boolean logic for defining dynamically configurable combinations of events (e.g., fuzzy logic or other forms of sequential or combinatorial logic) may be used for specific applications, where advantageous.

[0042] A device command is a string, formatted according to a pre-defined syntax, which conveys operational instructions and/or configuration parameters to the Command Interpreter **406** in order to make the locator device **10** perform an action or to change the device configuration **172**.

[0043] An action represents a function(s) of the locator device **10**, which can be implemented via one or more device command. For example, an action may be turning on a specific telemetry output or sending an alarm to the in-vehicle navigation system connected to the primary serial interface **134**.

[0044] In the context of this invention, configuration parameters are discrete aspects of the device configuration **172** which control specific operational aspects and/or functions of the locator device **10**. For example, a configuration parameter may specify the frequency with which the locator device **10** will report to the Management System **18** or the mode of communication to be used to communicate with the Management System **18**—the RF interface **118** or the satellite modem **146** connected to secondary serial connection **136** as was described above in reference to FIG. **2**. Configuration parameters may also specify entries in the Profile Table **176** or Geofence Table **178**.

[0045] Further details of operation of event profiles as well as some examples will be described below.

TABLE 1

Events Number	Event Description
1	PPP Context is inactive - Cellular Modem or wireless network is down
2	SMS - PPP context is active, but there is no host connection
3	TCP - PPP context is active, and there is a host connection
4	Circular geofence crossed into
5	Circular geofence crossed out of
6	geofence 1 crossing into
7	geofence 1 crossing out of
8	geofence 2 crossing into
9	geofence 2 crossing out of
10	geofence 3 crossing into
11	geofence 3 crossing out of
12	GPS fix occurs
13	GPS nofix occurs
14	geofence 4 crossing into
15	geofence 4 crossing out of
16	geofence 5 crossing into
17	geofence 5 crossing out of
18	geofence 6 crossing into
19	geofence 6 crossing out of
20–35	Physical Input 0–15 ON
36–51	Physical Input 0–15 OFF
52–67	Physical Output 0–15 ON
68–83	Physical Output 0–15 OFF
84–99	Virtual Input 0–15 ON
100–115	Virtual Input 0–15 OFF
116–131	Virtual Output 0–15 ON
132–147	Virtual Output 0–15 OFF
148	Main Power OFF
149	Battery Power ON
150	Low Battery
151	Timer 1 expired
152	Timer 1 running
153	Timer 2 expired
154	Timer 2 running
155	Timer 3 expired
156	Timer 3 running
157	In radio coverage
158	Out of radio coverage
159	Out of preferred wireless network

[0046] Table Formats

[0047] Referring to FIG. **5**, a format of event profile entries in the Profile Table **176** is shown generally at **200**. Each Profile Table **176** entry comprises a P_NUM field **202**, a T_WORD field **204**, a T_MASK field **206**, a P_HYSTERISIS field **208**, a COMMANDS field **210**, a TIMER_START field **212**, and a P_ACTIVE flag **214**. The P_NUM field **202** contains a priority number of the event profile described in the entry. Profile Table **176** entries are evaluated in a sequential manner starting with an event profile with the highest number. A default event profile contains 0 in the P_NUM field **202** and is activated when the received events do not correspond to the triggers of any other event profile in the Profile Table **176**. The T_WORD field **204** defines a set of events which are evaluated for the event profile. Each bit of T_WORD field **204** corresponds to an event number, as can be seen in, for example, Table 1. The T_MASK field **206** defines which events contained in the T_WORD field **204** are sufficient events and which ones are required events. Sufficient events will cause an event profile to be activated if any of sufficient events are occurring at the time of the evaluation. Necessary events will only cause an event profile to be activated if all of the necessary events are occurring at the time of the evaluation. A trigger for an event profile is defined by the combination of the contents of the T_WORD field **204** and the T_MASK field **206**, in effect, a Boolean expression for evaluating events. The P_HYSTERISIS field **208** contains a numeric value defining a minimum duration during which the events (any sufficient or all necessary) defined in the T_WORD field **204** must be contemporaneously occurring to activate an event profile to which they correspond. The COMMANDS field **210** contains a set of device commands which are output to the Command Interpreter **406** when an event profile is activated. The TIMER_START field **212** is populated with a timestamp indicating a time when any of the sufficient or all of the necessary events were found to be occurring and a hysteresis timer (not shown) for the event profile was started. The P_ACTIVE flag **214** is a Boolean flag indicating that the event profile is currently active, i.e., that the device commands contained in the configuration field **210** have been successfully processed by the Command Interpreter **406**.

[0048] A person skilled in the art will appreciate that the Profile Table **176** format described above is in the context of the described embodiment and is not a limiting aspect of the invention. Depending on a particular application, parameters or fields may be added to or removed from the event profile entries.

[0049] Profile Manager

[0050] Referring now to FIG. **5**, operation of the Profile Manager **402** process according to one embodiment of the invention is shown in more detail at **300**. A person skilled in the art will appreciate that a variety of methods and techniques may be used to implement the Profile Manager **402** process described herein. The process description provided below describes the implementation according to one embodiment of the invention and is not a limiting factor thereof. The operation of the Profile Manager **402** process begins at the start of the duty cycle as shown at block **302**. A person skilled in the art will appreciate that the frequency of duty cycles may depend on a number of factors such as hardware components used, types of inputs/outputs processed, and the complexity of the locator device **10**. In one embodiment of the invention, a duty cycle begins every 0.1 seconds, i.e., at a frequency of 10 Hz. Upon the start of the duty cycle, block **310** directs the microprocessor **100** to evaluate all currently occurring events to create an ACT_T_WORD. After creating the ACT_T_WORD at block **310**, block **312** directs the microprocessor **100** to retrieve the first event profile entry from the Profile Table **176**. As described above, the first event profile entry is the event profile entry with the highest number contained in the P_NUM field **202**. After retrieving the profile entry, block **314** directs the microprocessor **100** to determine the sufficient events (STE) for the entry by performing a logical AND operation between the contents of the T_WORD field **204** and the T_MASK field **206**. Block **316** then directs the microprocessor **100** to test the contemporaneous occurring events by performing a logical AND operation between STE and ACT_T_WORD. At block **318**, the microprocessor **100** is directed to check whether the result of operation at block **316** is equal to zero. If no, then the sufficient events are present, and the microprocessor **100** is directed at block **327** to check whether the event profile entry corresponds to the currently active event profile by checking whether the P_ACTIVE flag **214** of the event profile entry is equal to TRUE. If yes, then no further processing is required and the microprocessor **100** is directed to end the duty cycle at block **350**.

[0051] Referring still to FIG. **5**, if, at block **327**, the P_ACTIVE flag **214** is determined to be equal to FALSE, block **336** directs the microprocessor **100** to check whether the hysteresis timer for the event profile entry has been started by checking if the TIMER_START field **212** of the event profile entry contains a valid timestamp. If the hysteresis timer has not yet been started, block **338** directs the microprocessor **100** to start the hysteresis timer for the event profile by writing the current time into the TIMER_START field **212** of the selected event profile entry. Once the hysteresis timer has been started at block **338**, the microprocessor **100** is directed to block **332**, the operation of which shall be described in further detail below.

[0052] Referring still to FIG. **5**, if, at block **336**, it is determined that the hysteresis timer for the profile entry has been started, block **340** directs the microprocessor **100** to check whether the time elapsed since the start of the hysteresis timer is greater than the hysteresis time defined in the P_HYSTERESIS field **208** of the selected event profile entry. If the elapsed time is greater than the value of the hysteresis time, block **342** directs the microprocessor **100** to forward the device commands contained in the COMMANDS field **210** of the event profile entry to the Command Interpreter **406** via the command output **421** described above in reference to FIG. **3**. Once the device commands have been successfully implemented by the Command Interpreter **406**, block **344** directs the microprocessor **100** to set the P_ACTIVE flag **214** in the event profile entry to TRUE and block **345** directs the microprocessor **100** to reset TIMER_START field **208** to 0. The microprocessor **100** is then directed to end the duty cycle at block **350**. If, at block **340**, it is determined that the hysteresis timer has not yet expired, the microprocessor **100** is directed to block **332**, the operation of which shall be described below.

[0053] Referring still to FIG. **5**, if, at block **318**, it is determined that the currently occurring events do not include any sufficient events, i.e., TEST was found to be equal to 0, block **320** directs the microprocessor **100** to determine necessary events (RTE) for the entry by performing a logical XOR operation between the contents of the T_WORD field **204** and the T_MASK field **206** of the currently selected event profile entry. Once RTE has been determined, block **322** directs the microprocessor **100** to test the currently occurring events by performing a logical AND operation between RTE and ACT_T_WORD. Block **324** then directs the microprocessor **100** to check whether the result of the test is equal to RTE by performing a logical XOR operation between TEST determined at block **322** and RTE determined at block **320**. At block **326** the microprocessor **100** is directed to check if the result of the operation at block **324** is equal to 0. If so, the microprocessor **100** is directed to block **327** and so on as has been described above. If, at block **324**, it is determined that the required events are not present, block **328** directs the microprocessor **100** to check whether the currently selected event profile is also the currently active event profile by checking if the P_ACTIVE flag **214** in the event profile entry is set to TRUE. If so, then the currently active event profile should no longer be active because neither the sufficient, nor the necessary events required by its trigger are present. Thus, if at block **328** it is determined that the currently active event profile should no longer be active, block **330** directs the microprocessor **100** to set the P_ACTIVE flag **214** in the currently selected event profile to FALSE. In either situation, if the currently active event profile had to be deactivated at block **330** or, if the currently selected event profile is not the active event profile, the microprocessor **100** is directed to block **332**, the operation of which will be described in further detail below.

[0054] Referring still to FIG. **5**, the operation of block **332** and connected blocks is described in further detail. Block **332** directs the microprocessor **100** to check whether there are more event profile entries contained in the Profile Table **176**. If so, then block **334** directs the microprocessor **100** to retrieve the next event profile entry from the Profile Table **176**. The next event profile entry will have a number contained in P_NUM field **202** that will be smaller than the contents of the P_NUM field of the previously selected event profile entry. Once the next event profile entry is retrieved, the microprocessor **100** is directed to repeat procedure contained in blocks **312** through **350** as described above. If, at block **332**, it was determined that there are no more non-default event profiles contained in the Profile Table **176**, by, for example, checking if the contents of the P_NUM field **202** are equal to 1, block **346** directs the microprocessor **100** to check whether the P_ACTIVE flag **214** in the default event profile is equal to TRUE. If so, then the default event profile is already active and the microprocessor **100** is directed to end the duty cycle at block **350**. If, at block **346**, it is determined that the default event profile is not currently active, block **348** directs the microprocessor **100** to forward the device commands contained in the COMMANDS field **210** of the default event profile entry to the Command Interpreter **406** via the command output **421** as described above in reference to FIG. **3**. Once the device commands have been accepted by the Command Interpreter **406**, block **349** directs the microprocessor **100** to set the P_ACTIVE flag **214** in the default event profile entry to TRUE and the microprocessor **100** is directed to end the duty cycle at block **350**.

[0055] Profile Configuration Tool

[0056] Referring to FIG. **7**, in accordance with one embodiment of the invention, a software profile configuration tool is shown generally at **800**. The profile configuration tool **800** can be used to add even profile entries to the Profile Table **176** by automatically generating a device command which will add an event profile entry to the table. The profile configuration tool **800** can be run on a PC connected to the locator device **10** via the primary serial connection **134** or on a customer PC **20** connected to the Management System **18** via the Internet **16**. A user operating the profile configuration tool **800** selects an event profile to be configured by selecting an appropriate radio-button from the list of available event profiles **806**. A person skilled in the art will appreciate that the number of event profiles is arbitrary and generally depends on the amount of memory and type of microprocessor **100** installed in the locator device **10**. Having selected an event profile to configure, the user can define contents of the T_WORD field **204** and the T_MASK field **206** of the selected entry by clicking on a plurality of checkboxes **802** and **804**, which represent events previously illustrated in Table 1. As shown in a legend **822**, an unchecked checkbox indicates that a event is not used in the profile, a checkbox with a checkmark indicates that the event is a necessary event, and a checkbox with a filled square indicates that the event is a sufficient event. In a field **808**, the user is able to select a value of the P_HYSTERESIS field **208** for the entry. Finally, in a textbox **809**, the user is able to enter device commands which will be stored in the COMMANDS field

210 in the entry. Once the user selects events and edits various fields described above, a resulting event profile device command **810** will be generated in a textbox **811** upon the user clicking on a Create Profile button **812**. The resulting event profile device command **810** contains the event profile number at **819**, the T_WORD at **820**, the T_MASK at **824**, the P_HYSTERESIS at **826** and COMMANDS at **828**. Upon specifying all of the needed event profile parameters, the user can use a Send Profile button **814** to upload the event profile to the locator device **10**. A person skilled in the art will appreciate that functionality disclosed herein is not limited to uploading an event profile to a single locator device **10**. Rather, by integrating the profile configuration tool **800** with the Management System **18**, a single event profile may be simultaneously uploaded to a plurality of locator devices managed by the Management System.

[0057] Still referring to FIG. **7**, the profile configuration tool further provides functionality enabled by buttons **816** and **818**. A Get Profile button **816** allows a user to download an event profile selected in field **806** from the locator device **10**. A Decode Profile button **818** allows the user to translate the event profile downloaded via the Get Profile button **816** into a graphical representation in fields **802**, **804**, **808** and **809**.

EXAMPLES

[0058] In one example, the locator device **10** and a specifically configured event profile are used to provide a truck driver with an audible and visual alarm when the driver exceeds a location-based speed limit defined by a truck operator. Thus, while the truck is located in city limits, the driver must maintain a speed below 50 km/h. However, outside of the city limits, the driver is allowed to maintain a speed of up to 80 km/h. Whenever a driver exceeds the speed appropriate for the truck's location, an audible alarm is sounded, a visual indicator is lit, and the locator device **10** sends a report of the incident to the Management Server **18** from where it can be accessed by or automatically reported to the truck operator. For the sake of explanation it is assumed that the speed-threshold notification feature is a function implemented on the locator device **10**, specifically, certain configuration parameters in the device configuration **172** define the threshold speed limit and the digital I/O outputs **143** which are turned on to activate the audio-visual alarms. Furthermore, for the sake of explanation, it is also assumed that the city limits are defined by a polygon geofence **1** which geographically encloses the city. To change the threshold speed limit, assuming that the default location of the truck is within the city limits, a 'rural' event profile is defined. This trigger for this event profile is a single necessary event—event #**7**, crossing out of geofence **1**, i.e., leaving the city limits. There is also a single command associated with this event profile—to change the configuration parameter corresponding to the threshold speed limit to 80 km/h. Thus, when an event is generated indicating that the truck has left the city limits, this event profile causes the locator device **10** to automatically reconfigure itself to now only report speed limit violations when the speed exceeds 80 km/h. As soon as the truck crosses back into the city limits, the event #**7** is no longer occurring, and thus the default event profile is loaded. A command contained in the default event profile reconfigures the locator device **10** to once again set the threshold speed limit to 50 km/h.

[0059] In another example, an event profile addresses a situation when a truck-and-trailer with the locator device **10** is parked in a storage yard or on a street. The trigger for this event profile (combination of T_WORD and T_MASK described above) consists of either two required events—event **5**, indicating that the vehicle with the locator device **10** has crossed a geofence associated with physical area of the storage yard, and event # **21**, indicating that physical input #**1** is ON, thus a trailer is connected; or one sufficient trigger—event # **26**, indicating that physical input #**5** is ON, thus an alarm system has been armed. The hysteresis time for activation of this event profile is **0** indicating that the event profile will become active as soon as all of the sufficient or required events are detected. As soon as the truck and trailer are parked in the yard or the alarm system armed, it is desired that the locator device **10** switch itself to an energy-saving passive monitoring mode. Specifically, the device commands associated with this event profile define actions—placing the locator device **10** into "sleep mode", and configuration parameters—changing reporting interval to once in 6 hours and enabling monitoring of digital inputs associated with trailer door opening or the alarm system being tripped. In accordance with the operation of the Profile Manager **402** described above, once the required events are detected and the device commands implemented by the Command Interpreter **406**, the P_ACTIVE flag for this event profile is set to TRUE and remain so until one or more of the required events or all sufficient events become inactive.

[0060] In another example, two event profiles are used to address a situation where a vehicle in which the locator device **10** is installed is being towed. Two event profiles are defined: a 'parked' profile and a 'towed' profile. For the parked profile, the triggers are defined by two required events: event #**50**—physical input **14** is OFF, corresponding to vehicle ignition being OFF; and event #**12**—GPS fix established. The parked event profile has a hysteresis of 180 seconds to make sure that the event profile does not become active if the vehicle merely stalls. The device commands associated with the parked profile define actions—placing the locator device in intermittent sleep mode, to wake up every 10 minutes to check conditions, and configuration parameters—configuring a security circular geofence and changing reporting interval to every 10 minutes to coincide with the locator device **10** waking up. Therefore, when a vehicle is parked and turned off, the parked event profile becomes activated, and the actions and configurations parameters described above are implemented. The towed event profile reconfigures the locator device **10** when the vehicle it is installed in is being towed outside of the security geofence—for example, it is being transported out of the city instead of being merely towed to an impound lot. The trigger for the towed event profile is defined by three required events: event #**50** and event #**12**—same as for the parked profile, and event #**5** indicating that the vehicle has crossed out of the circular geofence. The device commands associated with the towed profile define actions—wake up and report that vehicle that vehicle has left the circular geofence, and configuration parameters—change location reporting frequency to once every 15 seconds to allow vehicle to be initially located.

[0061] In another example, an event profile is used to allow the fleet operator to save communication costs by using a cheaper GPRS network whenever possible and only switching to the expensive satellite network only when the

GPRS network is unavailable. The trigger for this event profile is defined by two sufficient events—event #**1** indicating that a PPP link with a wireless modem (reported by the wireless driver **410**) is down, or event #**2** indicating the PPP link is up, but only SMS communications to the Management System **18** are available, i.e., only a GSM network is available. A hysteresis value of 60 is associated with the event profile to avoid 'flapping' between connections when the problem is transient. The device commands associated with this event profile define several configuration parameters needed to reconfigure the locator device **10** to connect to the Management System **18** via the satellite modem **146** connected to the secondary serial connection **136** as described above. Naturally, as soon as these events are no longer contemporaneously occurring, the trigger for this event profile can no longer be satisfied, thus, a default event profile, which reconfigures the locator device to once again use the GPRS network, is activated.

[0062] In another example, an event profile can be configured where the trigger is a combination of Virtual Input and Virtual Output events. These events are defined in the device configuration **172** as mapping a function of the vehicle bus interface **114** to a standard input or output event. For example, where a functionality of a vehicle bus provides reporting of an engine's revolutions per minute (RPM), the locator device **10** may be configured to map a threshold RPM value to a Virtual Input #**1** going ON or OFF depending on whether the reported value is above or below a threshold. A similar mapping, but this time to a virtual output, can be done for a function of a vehicle bus system that accepts inputs from the locator device **10**. As above, the triggers which comprise these events can be used to correspond to actions or to reconfigure the locator device **10**, including reconfiguring of the mapping described in this example.

[0063] To facilitate explanation of the novel aspects of this invention, a number of examples of operation of the locator device **10** generally and of the event profiles specifically were provided above. However, the invention is not intended to be limited to the specific form set forth herein, but on the contrary, it is intended to cover such alternatives, modifications, and equivalents, as can be reasonably included within the spirit and scope of the invention as defined by the appended claims.

We claim:

1. A method of dynamically operating a locator device, comprising the steps of:

a. defining a plurality of events where each of said events represents an operational status of said locator device;

b. defining a plurality of triggers where each of said triggers is a dynamically configurable contemporaneously occurring combination of said events;

c. defining a plurality of event profiles where each of said event profiles is a user-configurable dynamic association between

i. one of said triggers; and

ii. a dynamically configurable set of device commands;

d. responding to a contemporaneously occurring subset of said events by evaluating said contemporaneously occurring subset of said events against said triggers of each of said event profiles;

e. activating one of said event profiles by processing said set of device commands corresponding to said event profile whenever said contemporaneously occurring subset of said events corresponds to said trigger of said event profile

2. The method of claim **1**, wherein said set of device commands changes a configuration parameter of said locator device.

3. The method of claim **1**, wherein said set of device commands causes said locator device to perform an action.

4. The method of claim **1**, wherein said set of device commands causes said locator device to change one or more of said configuration parameters and perform one or more actions.

5. The method of claim **1**, wherein said user-configurable dynamic association is implemented using Boolean logic.

6. The method of claim **1**, wherein said user-configurable dynamic association is implemented using any form of combinatorial, sequential or associative logic.

7. The method of claim **1**, wherein one of said events represents said locator device being located inside or outside a defined geographical area.

8. The method of claim **1**, wherein one of said events represents said locator device successfully receiving location information from GPS satellites.

9. The method of claim **1**, wherein said trigger is implemented by a combination of a trigger word and a trigger mask, wherein:

a. said trigger word represents a subset of said events against which said contemporaneously occurring subset of said events is evaluated; and

b. said trigger mask represents which of said subset of events must alone or in concert to activate said event profile which comprises said trigger.

10. The method of claim **1**, wherein said responding further includes performing Boolean operations between said contemporaneously occurring subset of said events and said trigger word and said trigger mask which comprise said trigger.

11. A dynamically operable locator device comprising:

a. a definition of a plurality of events where each of said events represents an operational status of said locator device;

b. a definition a plurality of triggers where each of said triggers is a dynamically configurable contemporaneously occurring combination of said events;

c. a definition a plurality of event profiles where each of said event profiles is a user-configurable dynamic association between

i. one of said triggers; and

ii. a dynamically configurable set of device commands;

d. means for responding to a contemporaneously occurring subset of said events by evaluating said contemporaneously occurring subset of said events against said triggers of each of said event profiles;

e. means for activating one of said event profiles by processing said set of device commands corresponding to said event profile whenever said contemporaneously occurring subset of said events corresponds to said trigger of said event profile.

12. The dynamically operable locator device of claim **10**, wherein said set of device commands changes a configuration parameter of said dynamically operable locator device.

13. The dynamically operable locator device of claim **10**, wherein said set of device commands causes said dynamically operable locator device to perform an action.

14. The dynamically operable locator device of claim **10**, wherein said set of device commands causes said dynamically operable locator device to change one or more of said configuration parameters and perform one or more actions.

15. The dynamically operable locator device of claim **10**, wherein said user-configurable dynamic association is implemented using Boolean logic.

16. The dynamically operable locator device of claim **10**, wherein said user-configurable dynamic association is implemented using any form of combinatorial, sequential or associative logic.

17. The dynamically operable locator device of claim **10**, wherein one of said events represents said dynamically operable locator device being located inside or outside a defined geographical area.

18. The dynamically operable locator device of claim **10**, wherein one of said events represents said dynamically operable locator device successfully receiving location information from GPS satellites.

19. The dynamically operable locator device of claim **10**, wherein said trigger is implemented by a combination of a trigger word and a trigger mask, wherein:

a. said trigger word represents a subset of said events against which said contemporaneously occurring subset of said events is evaluated; and

b. said trigger mask represents which of said subset of events must alone or in concert to activate said event profile which comprises said trigger.

20. The dynamically operable locator device of claim **10**, wherein said responding further includes performing Boolean operations between said contemporaneously occurring subset of said events and said trigger word and said trigger mask which comprise said trigger.

* * * * *