Application Data Sheet 37 CFR 1.76	Attorney Docket Number	00058P00US
	Application Number	
Title of Invention	GLOW FISH TAPE SYSTEM	

The application data sheet is part of the provisional or nonprovisional application for which it is being submitted. The following form contains the bibliographic data arranged in a format specified by the United States Patent and Trademark Office as outlined in 37 CFR 1.76.
This document may be completed electronically and submitted to the Office in electronic format using the Electronic Filing System (EFS) or the document may be printed and included in a paper filed application.

Secrecy Order 37 CFR 5.2:

☐ Portions or all of the application associated with this Application Data Sheet may fall under a Secrecy Order pursuant to 37 CFR 5.2 (Paper filers only. Applications that fall under Secrecy Order may not be filed electronically.)

Inventor Information:

Inventor 1

Legal Name

Prefix	Given Name	Middle Name	Family Name	Suffix
	Daniel	R.	Pearson	

Residence Information (Select One) ◉ US Residency ◯ Non US Residency ◯ Active US Military Service

City	Fortworth	State/Province	TX	Country of Residence i	US

Mailing Address of Inventor:

Address 1	Klein Tools, Inc		
Address 2	501 Easy Drive		
City	Mansfield	State/Province	TX
Postal Code	76063	Country i	US

All Inventors Must Be Listed - Additional Inventor Information blocks may be generated within this form by selecting the **Add** button. Add

Correspondence Information:

Enter either Customer Number or complete the Correspondence Information section below.
For further information see 37 CFR 1.33(a).

☐ **An Address is being provided for the correspondence Information of this application.**

Customer Number	144588		
Email Address	ipcounsel@kleintools.com	Add Email	Remove Email
Email Address	jfairchild@kleintools.com	Add Email	Remove Email

Application Information:

Title of the Invention	GLOW FISH TAPE SYSTEM		
Attorney Docket Number	00058P00US	Small Entity Status Claimed	☐
Application Type	Nonprovisional		
Subject Matter	Utility		
Total Number of Drawing Sheets (if any)	4	Suggested Figure for Publication (if any)	1

PTO/AIA/14 (08-15)
Approved for use through 04/30/2017. OMB 0651-0032
U.S. Patent and Trademark Office; U.S. DEPARTMENT OF COMMERCE
Under the Paperwork Reduction Act of 1995, no persons are required to respond to a collection of information unless it contains a valid OMB control number.

Application Data Sheet 37 CFR 1.76	Attorney Docket Number	00058P00US
	Application Number	
Title of Invention	GLOW FISH TAPE SYSTEM	

Filing By Reference:

Only complete this section when filing an application by reference under 35 U.S.C. 111(c) and 37 CFR 1.57(a). Do not complete this section if application papers including a specification and any drawings are being filed. Any domestic benefit or foreign priority information must be provided in the appropriate section(s) below (i.e., "Domestic Benefit/National Stage Information" and "Foreign Priority Information").

For the purposes of a filing date under 37 CFR 1.53(b), the description and any drawings of the present application are replaced by this reference to the previously filed application, subject to conditions and requirements of 37 CFR 1.57(a).

Application number of the previously filed application	Filing date (YYYY-MM-DD)	Intellectual Property Authority or Country

Publication Information:

☐ Request Early Publication (Fee required at time of Request 37 CFR 1.219)

☐ **Request Not to Publish.** I hereby request that the attached application not be published under 35 U.S.C. 122(b) and certify that the invention disclosed in the attached application **has not and will not** be the subject of an application filed in another country, or under a multilateral international agreement, that requires publication at eighteen months after filing.

Representative Information:

Representative information should be provided for all practitioners having a power of attorney in the application. Providing this information in the Application Data Sheet does not constitute a power of attorney in the application (see 37 CFR 1.32).
Either enter Customer Number or complete the Representative Name section below. If both sections are completed the customer Number will be used for the Representative Information during processing.

Please Select One:	◉ Customer Number	○ US Patent Practitioner	○ Limited Recognition (37 CFR 11.9)
Customer Number	144588		

Prefix	**Given Name**	Middle Name	**Family Name**	Suffix	Remove
Registration Number					
Prefix	**Given Name**	Middle Name	**Family Name**	Suffix	Remove
Registration Number					

Additional Representative Information blocks may be generated within this form by selecting the **Add** button.

PTO/AIA/14 (08-15)
Approved for use through 04/30/2017. OMB 0651-0032
U.S. Patent and Trademark Office; U.S. DEPARTMENT OF COMMERCE
Under the Paperwork Reduction Act of 1995, no persons are required to respond to a collection of information unless it contains a valid OMB control number.

Application Data Sheet 37 CFR 1.76	Attorney Docket Number	00058P00US
	Application Number	
Title of Invention	GLOW FISH TAPE SYSTEM	

Domestic Benefit/National Stage Information:

This section allows for the applicant to either claim benefit under 35 U.S.C. 119(e), 120, 121, 365(c), or 386(c) or indicate National Stage entry from a PCT application. Providing benefit claim information in the Application Data Sheet constitutes the specific reference required by 35 U.S.C. 119(e) or 120, and 37 CFR 1.78.
When referring to the current application, please leave the "Application Number" field blank.

Prior Application Status			Remove
Application Number	Continuity Type	Prior Application Number	Filing or 371(c) Date (YYYY-MM-DD)

Additional Domestic Benefit/National Stage Data may be generated within this form by selecting the **Add** button.

Foreign Priority Information:

This section allows for the applicant to claim priority to a foreign application. Providing this information in the application data sheet constitutes the claim for priority as required by 35 U.S.C. 119(b) and 37 CFR 1.55. When priority is claimed to a foreign application that is eligible for retrieval under the priority document exchange program (PDX) the information will be used by the Office to automatically attempt retrieval pursuant to 37 CFR 1.55(i)(1) and (2). Under the PDX program, applicant bears the ultimate responsibility for ensuring that a copy of the foreign application is received by the Office from the participating foreign intellectual property office, or a certified copy of the foreign priority application is filed, within the time period specified in 37 CFR 1.55(g)(1).

Application Number	Country[i]	Filing Date (YYYY-MM-DD)	Access Code[i] (if applicable)

Additional Foreign Priority Data may be generated within this form by selecting the **Add** button.

Statement under 37 CFR 1.55 or 1.78 for AIA (First Inventor to File) Transition Applications

☐ This application (1) claims priority to or the benefit of an application filed before March 16, 2013 and (2) also contains, or contained at any time, a claim to a claimed invention that has an effective filing date on or after March 16, 2013.
NOTE: By providing this statement under 37 CFR 1.55 or 1.78, this application, with a filing date on or after March 16, 2013, will be examined under the first inventor to file provisions of the AIA.

Under the Paperwork Reduction Act of 1995, no persons are required to respond to a collection of information unless it contains a valid OMB control number.

Application Data Sheet 37 CFR 1.76	Attorney Docket Number	00058P00US
	Application Number	
Title of Invention	GLOW FISH TAPE SYSTEM	

Authorization or Opt-Out of Authorization to Permit Access:

When this Application Data Sheet is properly signed and filed with the application, applicant has provided written authority to permit a participating foreign intellectual property (IP) office access to the instant application-as-filed (see paragraph A in subsection 1 below) and the European Patent Office (EPO) access to any search results from the instant application (see paragraph B in subsection 1 below).

Should applicant choose not to provide an authorization identified in subsection 1 below, applicant **must opt-out** of the authorization by checking the corresponding box A or B or both in subsection 2 below.

NOTE: This section of the Application Data Sheet is **ONLY** reviewed and processed with the **INITIAL** filing of an application. After the initial filing of an application, an Application Data Sheet cannot be used to provide or rescind authorization for access by a foreign IP office(s). Instead, Form PTO/SB/39 or PTO/SB/69 must be used as appropriate.

1. Authorization to Permit Access by a Foreign Intellectual Property Office(s)

A. Priority Document Exchange (PDX) - Unless box A in subsection 2 (opt-out of authorization) is checked, the undersigned hereby **grants the USPTO authority** to provide the European Patent Office (EPO), the Japan Patent Office (JPO), the Korean Intellectual Property Office (KIPO), the State Intellectual Property Office of the People's Republic of China (SIPO), the World Intellectual Property Organization (WIPO), and any other foreign intellectual property office participating with the USPTO in a bilateral or multilateral priority document exchange agreement in which a foreign application claiming priority to the instant patent application is filed, access to: (1) the instant patent application-as-filed and its related bibliographic data, (2) any foreign or domestic application to which priority or benefit is claimed by the instant application and its related bibliographic data, and (3) the date of filing of this Authorization. See 37 CFR 1.14(h)(1).

B. Search Results from U.S. Application to EPO - Unless box B in subsection 2 (opt-out of authorization) is checked, the undersigned hereby **grants the USPTO authority** to provide the EPO access to the bibliographic data and search results from the instant patent application when a European patent application claiming priority to the instant patent application is filed. See 37 CFR 1.14(h)(2).

The applicant is reminded that the EPO's Rule 141(1) EPC (European Patent Convention) requires applicants to submit a copy of search results from the instant application without delay in a European patent application that claims priority to the instant application.

2. Opt-Out of Authorizations to Permit Access by a Foreign Intellectual Property Office(s)

☐ A. Applicant **DOES NOT** authorize the USPTO to permit a participating foreign IP office access to the instant application-as-filed. If this box is checked, the USPTO will not be providing a participating foreign IP office with any documents and information identified in subsection 1A above.

☐ B. Applicant **DOES NOT** authorize the USPTO to transmit to the EPO any search results from the instant patent application. If this box is checked, the USPTO will not be providing the EPO with search results from the instant application.

NOTE: Once the application has published or is otherwise publicly available, the USPTO may provide access to the application in accordance with 37 CFR 1.14.

PTO/AIA/14 (08-15)
Approved for use through 04/30/2017. OMB 0651-0032
U.S. Patent and Trademark Office; U.S. DEPARTMENT OF COMMERCE
Under the Paperwork Reduction Act of 1995, no persons are required to respond to a collection of information unless it contains a valid OMB control number.

Application Data Sheet 37 CFR 1.76	Attorney Docket Number	00058P00US
	Application Number	
Title of Invention	GLOW FISH TAPE SYSTEM	

Applicant Information:

Providing assignment information in this section does not substitute for compliance with any requirement of part 3 of Title 37 of CFR to have an assignment recorded by the Office.

Applicant 1

If the applicant is the inventor (or the remaining joint inventor or inventors under 37 CFR 1.45), this section should not be completed. The information to be provided in this section is the name and address of the legal representative who is the applicant under 37 CFR 1.43; or the name and address of the assignee, person to whom the inventor is under an obligation to assign the invention, or person who otherwise shows sufficient proprietary interest in the matter who is the applicant under 37 CFR 1.46. If the applicant is an applicant under 37 CFR 1.46 (assignee, person to whom the inventor is obligated to assign, or person who otherwise shows sufficient proprietary interest) together with one or more joint inventors, then the joint inventor or inventors who are also the applicant should be identified in this section.

Clear

◉ Assignee	○ Legal Representative under 35 U.S.C. 117	○ Joint Inventor
○ Person to whom the inventor is obligated to assign.	○ Person who shows sufficient proprietary interest	

If applicant is the legal representative, indicate the authority to file the patent application, the inventor is:

Name of the Deceased or Legally Incapacitated Inventor:

If the Applicant is an Organization check here. ☒

Organization Name	Klein Tools, Inc.		
Mailing Address Information For Applicant:			
Address 1	Klein Tools, Inc. c/o Jeff Fairchild		
Address 2	450 Bond Street		
City	Lincolnshire	**State/Province**	IL
Country[i]	US	Postal Code	60069
Phone Number	8478215549	Fax Number	
Email Address	ipcounsel@kleintools.com		

Additional Applicant Data may be generated within this form by selecting the Add button.

Under the Paperwork Reduction Act of 1995, no persons are required to respond to a collection of information unless it contains a valid OMB control number.

Application Data Sheet 37 CFR 1.76	Attorney Docket Number	00058P00US
	Application Number	
Title of Invention	GLOW FISH TAPE SYSTEM	

Assignee Information including Non-Applicant Assignee Information:

Providing assignment information in this section does not substitute for compliance with any requirement of part 3 of Title 37 of CFR to have an assignment recorded by the Office.

Assignee 1

Complete this section if assignee information, including non-applicant assignee information, is desired to be included on the patent application publication. An assignee-applicant identified in the "Applicant Information" section will appear on the patent application publication as an applicant. For an assignee-applicant, complete this section only if identification as an assignee is also desired on the patent application publication.

If the Assignee or Non-Applicant Assignee is an Organization check here. ☒

Organization Name	Klein Tools, Inc.		
Mailing Address Information For Assignee including Non-Applicant Assignee:			
Address 1	Klein Tools, c/o Jeff Fairchild		
Address 2	450 Bond Street		
City	Lincolnshire	**State/Province**	IL
Country i	US	Postal Code	60069
Phone Number	8478215549	Fax Number	
Email Address	ipcounsel@kleintools.com		

Additional Assignee or Non-Applicant Assignee Data may be generated within this form by selecting the Add button.

Under the Paperwork Reduction Act of 1995, no persons are required to respond to a collection of information unless it contains a valid OMB control number.

Application Data Sheet 37 CFR 1.76	Attorney Docket Number	00058P00US
	Application Number	
Title of Invention	GLOW FISH TAPE SYSTEM	

Signature:

NOTE: This Application Data Sheet must be signed in accordance with 37 CFR 1.33(b). **However, if this Application Data Sheet is submitted with the INITIAL filing of the application and either box A or B is not checked in subsection 2 of the "Authorization or Opt-Out of Authorization to Permit Access" section, then this form must also be signed in accordance with 37 CFR 1.14(c).**

This Application Data Sheet **must** be signed by a patent practitioner if one or more of the applicants is a **juristic entity** (e.g., corporation or association). If the applicant is two or more joint inventors, this form must be signed by a patent practitioner, **all** joint inventors who are the applicant, or one or more joint inventor-applicants who have been given power of attorney (e.g., see USPTO Form PTO/AIA/81) on behalf of **all** joint inventor-applicants.

See 37 CFR 1.4(d) for the manner of making signatures and certifications.

Signature	/JEFFERY N. FAIRCHLD/			Date (YYYY-MM-DD)	
First Name	Jeffery	Last Name	Fairchild	Registration Number	37825

Additional Signature may be generated within this form by selecting the Add button.

GLOW FISH TAPE SYSTEM

CROSS-REFERENCE TO RELATED APPLICATIONS

[0001] None

BACKGROUND OF THE DISCLOSURE

[0002] The present disclosure relates fish tapes that are deployed from a case that stores the fish tape when the fish tape is not in use. Most current fish tapes of this type utilize a case that deploys the fish tape from an annular slot, typically in an outer perimeter of the case, with at least a portion of the fish tape being retained in the case during use. Fish tapes are typically made of nylon, fiberglass, nylon jacketed fiberglass, or a suitable metal, such as stainless steel or tempered spring steel or multi-stranded steel wire, with the fish tape having sufficient stiffness to be pushed through a conduit or other enclosed space while being sufficiently flexible to flex around bends or corners in the conduit or other enclosed space. Fish tapes are provided in a variety of sizes and lengths, with the commercially available lengths typically being provided in the range of 20 feet to 240 feet.

[0003] Such fish tapes are used to pull electrical wires and fiber optic cables through conduit or into enclosed wall space and there are commercially available light emitting tips that can be connected to the end of the fish tape to improve the ability of a user to see the fish tape as it is moving near an opening through which a user wishes to pull electrical wire or fiber optic cable. While such fish tapes, cases and tips work well for their intended purpose, there is always room for improvement. For example, the light emitting tips are not as effective if the tip has already moved past the opening through which a user wants to pull the electrical wire or fiber optic cable.

BRIEF SUMMARY OF THE DISCLOSURE

[0004] In accordance with one feature of this disclosure, a fish tape system includes a fish tape and a donut shaped case. The fish tape has a length extending from a first

end to a second end, and the length of the fish tape includes a luminescent material that emits light after being energized by exposure to a light source. The donut shaped case has a pair of sidewalls extending between a radially innermost wall and a radially outermost wall. The sidewalls are spaced from each other to define a fish tape storage compartment that stores the length of fish tape for deployment via the annular opening in the case. The case further includes an annular opening extending around a circumference of one of the inner and outer walls. At least a portion of the case is transparent to allow the luminescent material to be energized by light passing through the portion.

[0005] As one feature, the outermost wall has the annular opening extending around a circumference of the outer wall, and at least one of the sidewalls of the case is transparent to allow the luminescent material to be energized by light passing through the at least one of the sidewalls.

[0006] In one feature, both of the sidewalls of the case are transparent to allow the luminescent material to be energized by light passing through the sidewalls.

[0007] According to one feature, at least one of the innermost and outermost walls is transparent to allow the luminescent material to be energized by light passing through the sidewalls.

[0008] As one feature, one of the sidewalls and portions of the innermost and outermost walls are defined by a first component of the case, and the other of the sidewalls and other portions of the innermost and outermost walls are defined by a second component of the case. The first and second components are assembled together to form the storage compartment. In a further feature, at least one of the first and second components includes a transparent material. In yet a further feature, both of the first and second components includes a transparent material.

[0009] In one feature, the fish tape system further includes a handle engaged with the case for sliding movement along a circumference of one of the inner and outer walls, the handle engageable with the fish tape to deploy the fish tape from the storage compartment and to reload the fish tape into the compartment.

[0010] According to one feature, the fish tape system further includes a handle engaged with the case for sliding movement along a circumference of the outer wall. The handle is engageable with the fish tape to deploy the fish tape from the storage compartment and to reload the fish tape into the compartment.

[0011] As one feature, the fish tape further includes a threaded opening in at least one of the first and second ends.

[0012] In one feature, at least a portion of at least one of the sidewalls of the case is transparent to allow the luminescent material to be energized by light passing through the at least one of the sidewalls.

[0013] According to one feature, at least portions of both of the sidewalls of the case are transparent to allow the luminescent material to be energized by light passing through the sidewalls.

[0014] As one feature, at least portions of all the walls of the case are transparent.

[0015] In accordance with one feature, a fish tape system includes a fish tape and a case. The fish tape has a length extending from a first end to a second end, and the length of the fish tape includes a luminescent material that emits light after being energized by exposure to a light source. The case has a fish tape storage compartment that stores the length of fish tape for deployment and reloading via an opening in the case. At least a portion of the case is transparent to allow the luminescent material to be energized by light passing through the portion and into the storage compartment.

[0016] As one feature, the storage compartment has an annular shape bounded by a pair of spaced sidewalls. According to further feature, at least a portion of at least one of the sidewalls is transparent. In yet a further feature, portions of both of the sidewalls are transparent.

[0017] In one feature, the case includes a pair of components that are joined to each other to define the storage compartment, and at least one of the pair of components includes a transparent material.

[0018] It should be understood that the inventive concepts disclosed herein do not require each of the features discussed above, may include any combination of the features discussed, and may include features not specifically discussed above.

BRIEF SUMMARY OF THE SEVERAL VIEWS OF THE DRAWINGS

[0019] Fig. 1 is a view is a perspective view from above and to the left of a fish tape system according to this disclosure;

[0020] Fig. 2 is a plan view of a fish tape of the fish tape system shown in Fig.1, with the fish tape removed from a case of the system and with a portion of the fish tape broken away for purposes of illustration;

[0021] Fig. 3 is a left side elevation view of the fish tape system of Fig. 1;

[0022] Fig. 4 is a right side elevation view of the fish tape system of Figs. 1 and 3;

[0023] Fig. 5, is a view taken from line 5-5 in Fig. 3;

[0024] Figs. 6A and 6B are enlarged views taken from line 6-6 in Fig.2 and show alternate embodiments of the fish tape shown in Fig. 2; and

[0025] Fig. 7 is an enlarged perspective view showing an end configuration for a fish tape according to this disclosure.

DETAILED DESCRIPTION OF PREFERRED EMBODIMENTS

[0026] As seen in Figs. 1-5, a fish tape system 10 is provided and includes a fish tape 12 and a case 14. As best seen in Fig. 2, the fish tape 12 has a length 16 extending from a first end 18 to a second end 20. The length 16 includes a luminescent material 22 that emits light after being energized by exposure to a light source 24, such as the sun or a light emitting element. The case 14 has a fish tape storage compartment 26 that stores the fish tape 12 for deployment via an opening 28 in the case 14. At least a portion of the case 14 is transparent to allow the luminescent material 22 to be energized by light passing through the transparent portion and into the storage compartment 26.

[0027] In the illustrated embodiment, the case14 is donut shaped and includes a pair of sidewalls 32 (best seen in Fig. 5) extending between a radially innermost wall 34 and a radially outermost wall 36. The wall 36 includes the opening 28 in the form of an annular opening 28 extending around the entire circumference of the wall 36. The

sidewalls 32 are spaced from each other, and in combination with inwardly facing annular surfaces 38 and 40 of the walls 34 and 36, respectively, define the storage compartment 26 with an annular shape. As best seen in Figs. 1 and 5, the illustrated and preferred case 14 is an assembly of two, half-case components 44 and 46 that are joined to each other using threaded fasteners 48. Each of the components 44 and 46 define one of the sidewalls 32 and approximately one-half of each of the walls 34 and 36 and are preferably molded using a suitable process, such as injection molding. The annular opening 28 is defined between each portion of the wall 36 defined by each of the components 44 and 46. Such constructions for donut shaped fish tape cases are well known, with a few examples of such commercially cases being offered by Ideal Electronics under model numbers 31-542, 31-056, and 31-064; by Gardner Bender under model numbers FTS-125R, FTS-250R, and FTS-50B; and Klein Tools under model numbers 56001, 56014, 56002, and 56005.

[0028] In the illustrated and highly preferred embodiment, the walls 32, 34 and 36 are all transparent to allow the luminescent material 22 to be energized by light passing into the compartment 26 through the wall 32, 34, and 36. In this regard, the components 44 and 46 can be molded from any suitable material, such a suitable polymeric/plastic/composite material. Non-limiting examples of suitable materials include: polycarbonate, polypropylene, and Acrylonitrile butadiene styrene (ABS).

[0029] The illustrated and preferred embodiment of the system 10 also includes a winding handle 50 that is mounted to slide within the annular opening 28 around the entire circumference of the wall 36. The handle 50 includes a grip 52 and a hoop or ring 54. As best seen in Fig. 5, the ring 54 has oppositely facing annular ribs 56, with each rib received in a corresponding annular channel in a corresponding one of the half-case components 44 and 46 for guided, sliding movement around the entire circumference of the wall 36. As best seen in Fig. 3, the grip 52 includes a tape guide portion 58 having a linear slot 60 that receives and guides the fish tape 12 has it is deployed from and wound into the compartment 26 via an opening 62 that extends through the ring 54. The features 52, 54, 56, 58, 60 and 62 are well known and employed in commercially available fish tape systems.

[0030] It is highly preferred that system 10 be configured to allow the fish tape 12 to be easily removed from the case 14 for use and then rewound into the case 14 after use. In the illustrated and novel embodiment, this is achieved by sizing the slot 60 and opening 62 to allow the end 20 to be readily removed from the case 14 and reinserted into the case 14, by providing an opening 64 in the wall 34 that allows the end 20 to readily pass through the wall 34, and by providing the case 14 with an anchor slot 66 that provide a snap-fit with the end 20 to allow the end 20 to be releasably retained in the slot 66. In the illustrated embodiment, the slot 66 is defined in a boss 68 that is formed as an integral, unitary part of the half-case component 46.

[0031] The length 16 of the fish tape 12 is formed from a structural member 70 that extends over the entire length 16. The structural member 70 can be a flexible strip of metal, a multi-strand metallic wire, or a cord or rope of nylon, fiberglass, or other flexible, high tensile strength material. The luminescent material 22 can be provided in any suitable form and preferably extends over the entire length 16, such as, for example, in the form of a luminescent coating that includes the material 20, such as a paint, on the structural member 70 that extends over the entire length 16 (shown in Fig. 2); a luminescent sheath/jacket that includes the material 20 and surrounds the structural member 70 extending over the entire length 16 (shown in Fig. 6A); or in the form as an integral component of the material that forms the structural member 70 (shown in Fig. 6B). Non-limiting examples of suitable materials for the luminescent material 22 include: strontium aluminate, zinc sulfide, or either of those materials blended with a base material, such as nylon, polyethylene, and/or polyethylene terephthalate (PET).

[0032] Each end 18 and 20 of the fish tape 12 may be provided in any suitable form and/or configuration, many of which are known, to allow or assist a user in the attachment of an electrical wire or optic cable or in the grasping of the fish tape 12 during a pulling or pushing operation. Non-limiting examples of suitable forms/configurations for the ends 18 and 20 include eyelet ends (shown in Figs. 1-4 for end 18), hook shaped ends, no-snag plastic tips, bullet ends, mini-eyelet ends, domed-eyelet ends, claw ends, male threaded connector ends, or female threaded connector

ends, all of which are well known in commercially available fish tape systems and fish rod systems. Figs. 1-4 and 7 shows an embodiment wherein the 20 has a threaded connector in the form of a female threaded opening 74.

[0033] Preferred embodiments of the inventive concepts are described herein, including the best mode known to the inventor(s) for carrying out the inventive concepts. Variations of those preferred embodiments will become apparent to those of ordinary skill in the art upon reading the foregoing description. The inventor(s) expect skilled artisans to employ such variations as appropriate, and the inventor(s) intend that the inventive concepts can be practiced otherwise than as specifically described herein. Accordingly, the inventive concepts disclosed herein include all modifications and equivalents of the subject matter recited in the claims appended hereto as permitted by applicable law. Moreover, any combination of the above-described elements and features in all possible variations thereof is encompassed by the inventive concepts unless otherwise indicated herein or otherwise clearly contradicted by context. Further in this regard, while highly preferred forms of the fish tape system 10 are shown in the figures, it should be understood that this disclosure anticipates variations in the specific details of each of the disclosed components and features of the fish tape system 10 and that no limitation to a specific form, configuration, or detail is intended unless expressly and specifically recited in an appended claim.

[0034] For example, while specific and preferred forms have been shown for the case 14, in some applications other forms and configurations for the case 14 may be employed. For example, in some applications it may be desirable for just one of the side walls 32 to be transparent, with the other side wall 32 and the other walls 34 and 36 being opaque. As another example, it may be desirable for just a portion of one of the walls 32, 34, and/or 36 to be transparent. As yet another example, while it is preferred for the annular opening 28 to be provided in the radially outermost wall, in some applications it may be desirable for the annular opening 28 to be provide in the radially innermost wall 34. As another example, while an annular opening 28 is preferred, in some applications a different opening configuration/shape may be desired. In another example, while the two half-case components 44 and 46 preferred, in some

embodiments it may be desirable to form the case 14 from a different configuration of components or a different number of components. Similarly, while the donut shape is a preferred form for the case 14, in some applications it may be desirable for the case 14 to have a different shape. As yet another example, while the disclosed configuration for the handle 50 is preferred, in some applications it may be desirable to utilize other configurations, many of which are known, for a winding handle. Similarly, in some applications it may be desirable for the system 10 to not have any type or configuration of winding handle. In a further example, while the opening 64, anchor slot 64 and boss 66 are preferred, in some application it may be desirable for these features to be eliminated and/or for replaced with other features to attach or anchor the end 20 in the case 14. In another example, while circular and rectangular cross sections have been shown for the fish tape 12, other cross sections may be desirable depending upon the specific application and/or material(s) used for the fish tape 12.

[0035] The use of the terms "a" and "an" and "the" and "at least one" and similar referents in the context of describing the invention (especially in the context of the following claims) are to be construed to cover both the singular and the plural, unless otherwise indicated herein or clearly contradicted by context. The use of the term "at least one" followed by a list of one or more items (for example, "at least one of A and B") is to be construed to mean one item selected from the listed items (A or B) or any combination of two or more of the listed items (A and B), unless otherwise indicated herein or clearly contradicted by context. The terms "comprising," "having," "including," and "containing" are to be construed as open-ended terms (i.e., meaning "including, but not limited to,") unless otherwise noted. The use of any and all examples, or exemplary language (e.g., "such as") provided herein, is intended merely to better illuminate the inventive concepts disclosed herein and does not pose a limitation on the scope of any invention unless expressly claimed. No language in the specification should be construed as indicating any non-claimed element as essential to the practice of the inventive concepts disclosed herein.

[0036] All references, including publications, patent applications, and patents, cited herein are hereby incorporated by reference to the same extent as if each reference

were individually and specifically indicated to be incorporated by reference and were set forth in its entirety herein.

CLAIMS

What is claimed is:

1. A fish tape system comprising:

a fish tape having a length extending from a first end to a second end, the length of the fish tape comprising a luminescent material that emits light after being energized by exposure to a light source; and

a donut shaped case having a pair of sidewalls extending between a radially innermost wall and a radially outermost wall, the outermost wall having an annular opening extending around a circumference of the outer wall, the sidewalls being spaced from each other to define a fish tape storage compartment that stores the length of fish tape for deployment via the annular opening in the case;

wherein at least one of the sidewalls of the case is transparent to allow the luminescent material to be energized by light passing through the at least one of the sidewalls.

2. The fish tape system of claim 1 wherein both of the sidewalls of the case are transparent to allow the luminescent material to be energized by light passing through the sidewalls.

3. The fish tape system of claim 2 wherein at least one of the innermost and outermost walls is transparent to allow the luminescent material to be energized by light passing through the sidewalls.

4. The fish tape system of claim 1 wherein one of the sidewalls and portions of the innermost and outermost walls are defined by a first component of the case, and the other of the sidewalls and other portions of the innermost and outermost walls are defined by a second component of the case, the first and second components being assembled together to form the storage compartment.

5. The fish tape system of claim 1 further comprising a handle engaged with the case for sliding movement along the circumference of the outer wall, the handle engageable with the fish tape to deploy the fish tape from the storage compartment and to reload the fish tape into the compartment.

6. The fish tape system of claim 1 wherein the fish tape further comprises a threaded opening in at least one of the first and second ends.

7. A fish tape system comprising:

a fish tape having a length extending from a first end to a second end, the length of the fish tape comprising a luminescent material that emits light after being energized by exposure to a light source; and

a donut shaped case having a pair of sidewalls extending between a radially innermost wall and a radially outermost wall, an annular opening extending around a circumference of one of the inner and outer walls, the sidewalls being spaced from each other to define a fish tape storage compartment that stores the length of fish tape for deployment via the annular opening in the case;

wherein at least a portion of the case is transparent to allow the luminescent material to be energized by light passing through the portion.

8. The fish tape system of claim 7 wherein at least a portion of at least one of the sidewalls of the case is transparent to allow the luminescent material to be energized by light passing through the at least one of the sidewalls.

9. The fish tape system of claim 7 wherein at least portions of both of the sidewalls of the case are transparent to allow the luminescent material to be energized by light passing through the sidewalls.

10. The fish tape system of claim 7 wherein at least portions of all the walls of the case are transparent.

11. The fish tape system of claim 7 wherein one of the sidewalls and portions of the innermost and outermost walls are defined by a first component of the case, and the other of the sidewalls and other portions of the innermost and outermost walls are defined by a second component of the case, the first and second components being assembled together to form the storage compartment.

12. The fish tape system of claim 11 wherein at least one of the first and second components comprises a transparent material.

13. The fish tape system of claim 11 wherein both of the first and second components comprises a transparent material.

14. The fish tape system of claim 7 further comprising a handle engaged with the case for sliding movement along a circumference of one of the inner and outer walls, the handle engageable with the fish tape to deploy the fish tape from the storage compartment and to reload the fish tape into the compartment.

15. The fish tape system of claim 7 wherein the fish tape further comprises a threaded opening in at least one of the first and second ends.

16. A fish tape system comprising:

a fish tape having a length extending from a first end to a second end, the length of the fish tape comprising a luminescent material that emits light after being energized by exposure to a light source; and

a case having a fish tape storage compartment that stores the length of fish tape for deployment and reloading via an opening in the case;

wherein at least a portion of the case is transparent to allow the luminescent material to be energized by light passing through the portion and into the storage compartment.

17. The fish tape system of claim 16 wherein the storage compartment has an annular shape bounded by a pair of spaced sidewalls.

18. The fish tape system of claim 17 wherein at least a portion of at least one of the sidewalls is transparent.

19. The fish tape system of claim 18 wherein portions of both of the sidewalls are transparent.

20. The fish tape system of claim 16 wherein the case comprises a pair of components that are joined to each other to define the storage compartment, and at least one of the pair of components comprises a transparent material.

ABSTRACT

A fish tape system includes a fish tape and a case having a storage compartment that stores the fish tape for deployment from the case. The fish tape has a length extending from a first end to a second end. The length includes a luminescent material that emits light after being energized by exposure to a light source. At least a portion of the case is transparent to allow the luminescent material 22 to be energized by light passing through the transparent portion and into the storage compartment.

Fig. 1

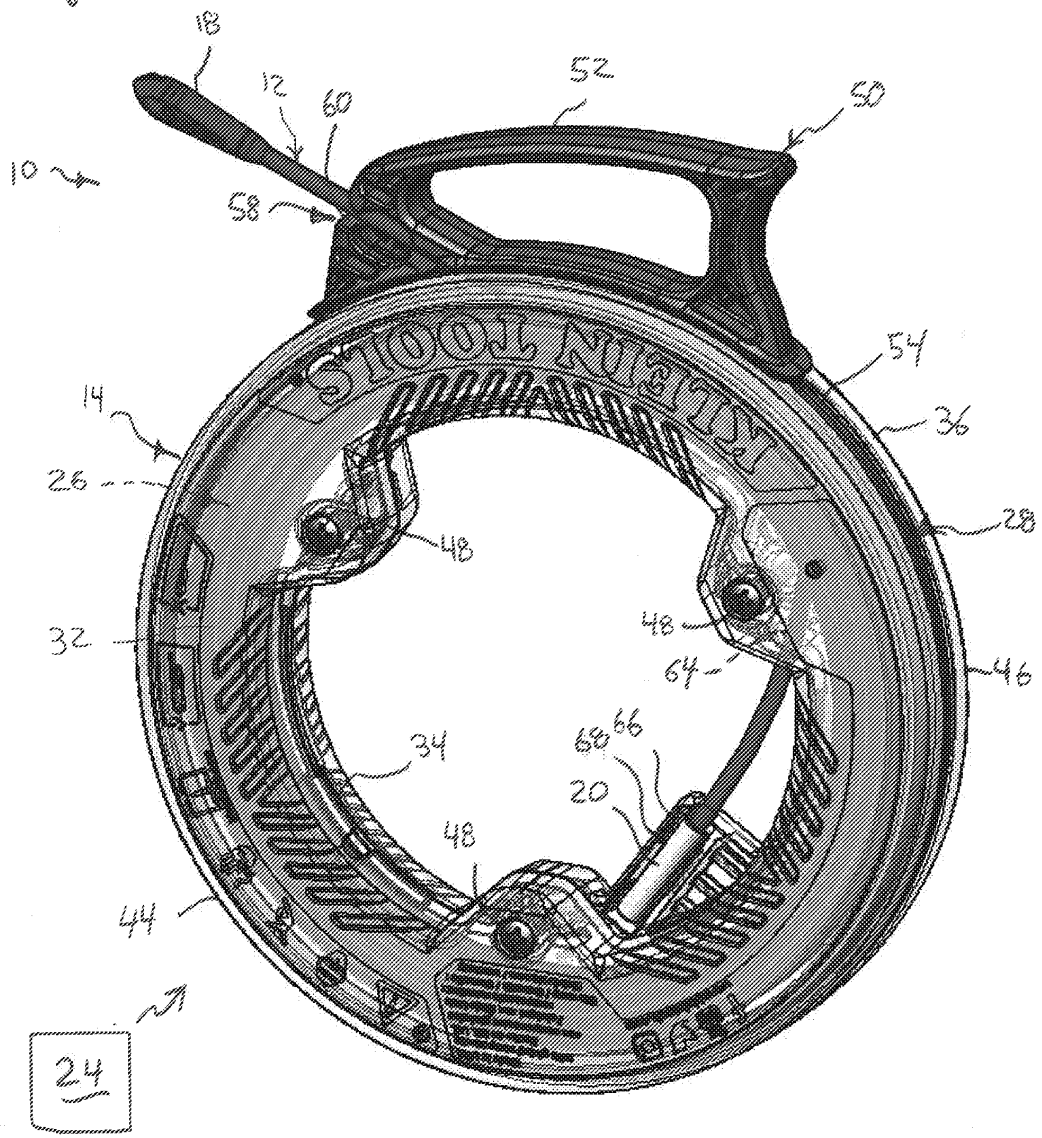
18
12
60
52
50
10
58
54
14
36
26
28
48
32
48
64
46
34
68
66
20
48
44
24

Fig. 2

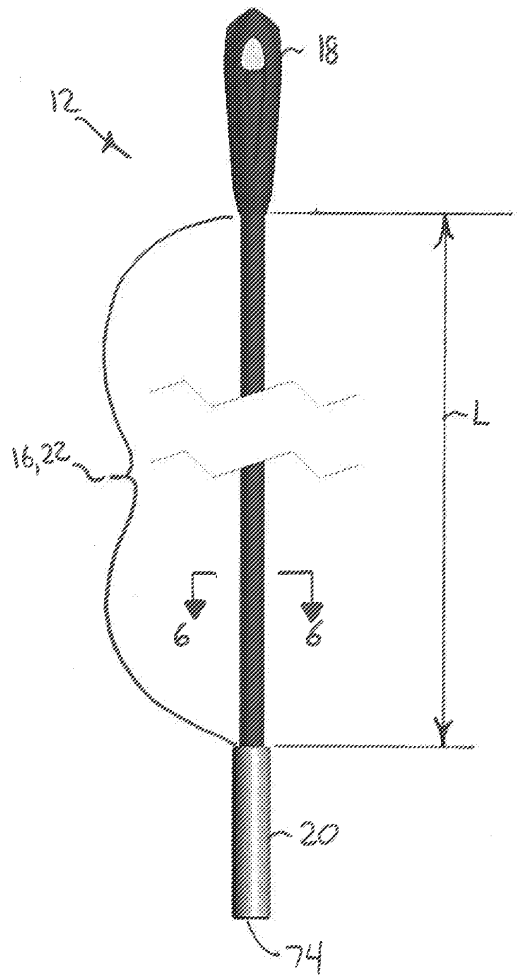
18
12
L
16,22
6
6
20
74

Fig. 3

50
52
44
32
56
28
18
12
46
54
32
24
56
36

Fig. 5

18
38
36
3/4
46
52
34
68
26
64
12
50
10
14
32
46
24

Fig. 4

Fig. 6A

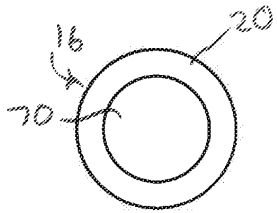

Fig. 6B

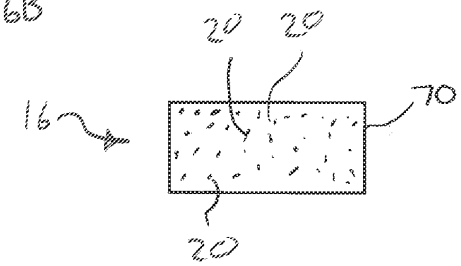

Fig. 7

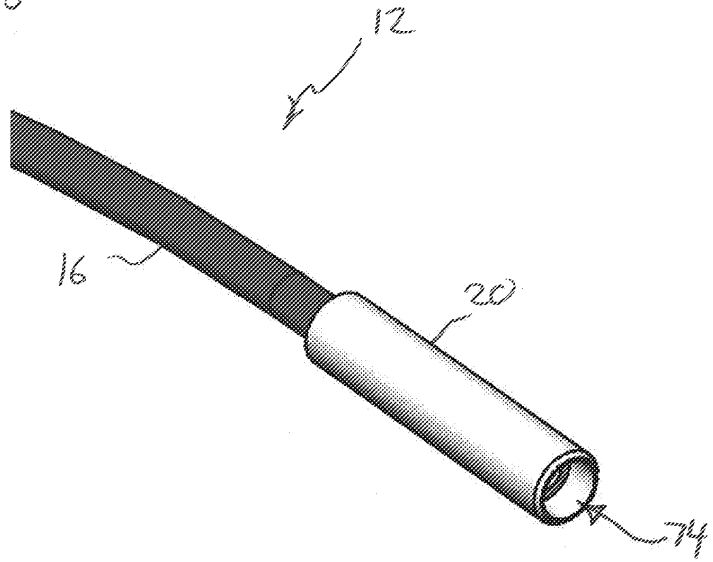

PTO/AIA/01 (06-12)
Approved for use through 11/30/2020. OMB 0651-0032
U.S. Patent and Trademark Office; U.S. DEPARTMENT OF COMMERCE
Under the Paperwork Reduction Act of 1995, no persons are required to respond to a collection of information unless it displays a valid OMB control number.

DECLARATION (37 CFR 1.63) FOR UTILITY OR DESIGN APPLICATION USING AN APPLICATION DATA SHEET (37 CFR 1.76)

Title of Invention	GLOW FISH TAPE SYSTEM

As the below named inventor, I hereby declare that:

This declaration is directed to:

- [x] The attached application, or
- [ ] United States application or PCT international application number _____

filed on _____.

The above-identified application was made or authorized to be made by me.

I believe that I am the original inventor or an original joint inventor of a claimed invention in the application.

I hereby acknowledge that any willful false statement made in this declaration is punishable under 18 U.S.C. 1001 by fine or imprisonment of not more than five (5) years, or both.

WARNING:

Petitioner/applicant is cautioned to avoid submitting personal information in documents filed in a patent application that may contribute to identity theft. Personal information such as social security numbers, bank account numbers, or credit card numbers (other than a check or credit card authorization form PTO-2038 submitted for payment purposes) is never required by the USPTO to support a petition or an application. If this type of personal information is included in documents submitted to the USPTO, petitioners/applicants should consider redacting such personal information from the documents before submitting them to the USPTO. Petitioner/applicant is advised that the record of a patent application is available to the public after publication of the application (unless a non-publication request in compliance with 37 CFR 1.213(a) is made in the application) or issuance of a patent. Furthermore, the record from an abandoned application may also be available to the public if the application is referenced in a published application or an issued patent (see 37 CFR 1.14). Checks and credit card authorization forms PTO-2038 submitted for payment purposes are not retained in the application file and therefore are not publicly available.

LEGAL NAME OF INVENTOR

Inventor: Daniel R. Pearson Date (Optional) : _____

Signature: _____

Note: An application data sheet (PTO/SB/14 or equivalent), including naming the entire inventive entity, must accompany this form or must have been previously filed. Use an additional PTO/AIA/01 form for each additional inventor.

This collection of information is required by 35 U.S.C. 115 and 37 CFR 1.63. The information is required to obtain or retain a benefit by the public which is to file (and by the USPTO to process) an application. Confidentiality is governed by 35 U.S.C. 122 and 37 CFR 1.11 and 1.14. This collection is estimated to take 1 minute to complete, including gathering, preparing, and submitting the completed application form to the USPTO. Time will vary depending upon the individual case. Any comments on the amount of time you require to complete this form and/or suggestions for reducing this burden, should be sent to the Chief Information Officer, U.S. Patent and Trademark Office, U.S. Department of Commerce, P.O. Box 1450, Alexandria, VA 22313-1450. DO NOT SEND FEES OR COMPLETED FORMS TO THIS ADDRESS. **SEND TO: Commissioner for Patents, P.O. Box 1450, Alexandria, VA 22313-1450.**

If you need assistance in completing the form, call 1-800-PTO-9199 and select option 2.

Privacy Act Statement

The **Privacy Act of 1974 (P.L. 93-579)** requires that you be given certain information in connection with your submission of the attached form related to a patent application or patent. Accordingly, pursuant to the requirements of the Act, please be advised that: (1) the general authority for the collection of this information is 35 U.S.C. 2(b)(2); (2) furnishing of the information solicited is voluntary; and (3) the principal purpose for which the information is used by the U.S. Patent and Trademark Office is to process and/or examine your submission related to a patent application or patent. If you do not furnish the requested information, the U.S. Patent and Trademark Office may not be able to process and/or examine your submission, which may result in termination of proceedings or abandonment of the application or expiration of the patent.

The information provided by you in this form will be subject to the following routine uses:

1. The information on this form will be treated confidentially to the extent allowed under the Freedom of Information Act (5 U.S.C. 552) and the Privacy Act (5 U.S.C 552a). Records from this system of records may be disclosed to the Department of Justice to determine whether disclosure of these records is required by the Freedom of Information Act.
2. A record from this system of records may be disclosed, as a routine use, in the course of presenting evidence to a court, magistrate, or administrative tribunal, including disclosures to opposing counsel in the course of settlement negotiations.
3. A record in this system of records may be disclosed, as a routine use, to a Member of Congress submitting a request involving an individual, to whom the record pertains, when the individual has requested assistance from the Member with respect to the subject matter of the record.
4. A record in this system of records may be disclosed, as a routine use, to a contractor of the Agency having need for the information in order to perform a contract. Recipients of information shall be required to comply with the requirements of the Privacy Act of 1974, as amended, pursuant to 5 U.S.C. 552a(m).
5. A record related to an International Application filed under the Patent Cooperation Treaty in this system of records may be disclosed, as a routine use, to the International Bureau of the World Intellectual Property Organization, pursuant to the Patent Cooperation Treaty.
6. A record in this system of records may be disclosed, as a routine use, to another federal agency for purposes of National Security review (35 U.S.C. 181) and for review pursuant to the Atomic Energy Act (42 U.S.C. 218(c)).
7. A record from this system of records may be disclosed, as a routine use, to the Administrator, General Services, or his/her designee, during an inspection of records conducted by GSA as part of that agency's responsibility to recommend improvements in records management practices and programs, under authority of 44 U.S.C. 2904 and 2906. Such disclosure shall be made in accordance with the GSA regulations governing inspection of records for this purpose, and any other relevant (*i.e.*, GSA or Commerce) directive. Such disclosure shall not be used to make determinations about individuals.
8. A record from this system of records may be disclosed, as a routine use, to the public after either publication of the application pursuant to 35 U.S.C. 122(b) or issuance of a patent pursuant to 35 U.S.C. 151. Further, a record may be disclosed, subject to the limitations of 37 CFR 1.14, as a routine use, to the public if the record was filed in an application which became abandoned or in which the proceedings were terminated and which application is referenced by either a published application, an application open to public inspection or an issued patent.
9. A record from this system of records may be disclosed, as a routine use, to a Federal, State, or local law enforcement agency, if the USPTO becomes aware of a violation or potential violation of law or regulation.

Electronic Patent Application Fee Transmittal

Application Number:	
Filing Date:	
Title of Invention:	GLOW FISH TAPE SYSTEM
First Named Inventor/Applicant Name:	Daniel R. Pearson
Filer:	Jeffery Neal Fairchild
Attorney Docket Number:	00058P00US

Filed as Large Entity

Filing Fees for Utility under 35 USC 111(a)

Description	Fee Code	Quantity	Amount	Sub-Total in USD($)
Basic Filing:				
UTILITY APPLICATION FILING	1011	1	300	300
UTILITY SEARCH FEE	1111	1	660	660
UTILITY EXAMINATION FEE	1311	1	760	760
Pages:				
Claims:				
Miscellaneous-Filing:				
Petition:				
Patent-Appeals-and-Interference:				

Description	Fee Code	Quantity	Amount	Sub-Total in USD($)
Post-Allowance-and-Post-Issuance:				
Extension-of-Time:				
Miscellaneous:				
			Total in USD ($)	**1720**

Electronic Acknowledgement Receipt	
EFS ID:	37868752
Application Number:	16696383
International Application Number:	
Confirmation Number:	6816
Title of Invention:	GLOW FISH TAPE SYSTEM
First Named Inventor/Applicant Name:	Daniel R. Pearson
Customer Number:	144588
Filer:	Jeffery Neal Fairchild
Filer Authorized By:	
Attorney Docket Number:	00058P00US
Receipt Date:	26-NOV-2019
Filing Date:	
Time Stamp:	16:25:11
Application Type:	Utility under 35 USC 111(a)

Payment information:

Submitted with Payment	yes
Payment Type	DA
Payment was successfully received in RAM	$1720
RAM confirmation Number	E2019APG25544274
Deposit Account	602056
Authorized User	Jeffery Fairchild
The Director of the USPTO is hereby authorized to charge indicated fees and credit any overpayment as follows: 37 CFR 1.17 (Patent application and reexamination processing fees) 37 CFR 1.19 (Document supply fees)	

37 CFR 1.21 (Miscellaneous fees and charges)

File Listing:

Document Number	Document Description	File Name	File Size(Bytes)/ Message Digest	Multi Part /.zip	Pages (if appl.)
1	Application Data Sheet	WebADS.pdf	114963 1f8f4abe2dbc3ca4be018f6946663855c72c9b21	no	7
Warnings:					
Information:					
2		00058P00USApplication.pdf	735370 546b2458a2ece1679c2156b3f0af4cbc2cf8794f	yes	14
	Multipart Description/PDF files in .zip description				
	Document Description		**Start**	**End**	
	Specification		1	9	
	Claims		10	13	
	Abstract		14	14	
Warnings:					
Information:					
3	Drawings-other than black and white line drawings	00058PUSDrawingsRevised.pdf	895369 bce027bb44eac2c555e28ee96508e6b4f03ce289	no	4
Warnings:					
The page size in the PDF is too large. The pages should be 8.5 x 11 or A4. If this PDF is submitted, the pages will be resized upon entry into the Image File Wrapper and may affect subsequent processing					
Information:					
4	Oath or Declaration filed	00058P00USDeclarationPearson.pdf	78544 774947cb2ccb9c8796cf66eb62cfedd03008dbe4	no	2
Warnings:					
The page size in the PDF is too large. The pages should be 8.5 x 11 or A4. If this PDF is submitted, the pages will be resized upon entry into the Image File Wrapper and may affect subsequent processing					
Information:					

5	Fee Worksheet (SB06)	fee-info.pdf	34721 625aeb7282af6d1be38dafb1141596b4320b798c	no	2
Warnings:					
Information:					
			Total Files Size (in bytes):	1858967	

This Acknowledgement Receipt evidences receipt on the noted date by the USPTO of the indicated documents, characterized by the applicant, and including page counts, where applicable. It serves as evidence of receipt similar to a Post Card, as described in MPEP 503.

New Applications Under 35 U.S.C. 111
If a new application is being filed and the application includes the necessary components for a filing date (see 37 CFR 1.53(b)-(d) and MPEP 506), a Filing Receipt (37 CFR 1.54) will be issued in due course and the date shown on this Acknowledgement Receipt will establish the filing date of the application.
National Stage of an International Application under 35 U.S.C. 371
If a timely submission to enter the national stage of an international application is compliant with the conditions of 35 U.S.C. 371 and other applicable requirements a Form PCT/DO/EO/903 indicating acceptance of the application as a national stage submission under 35 U.S.C. 371 will be issued in addition to the Filing Receipt, in due course.
New International Application Filed with the USPTO as a Receiving Office
If a new international application is being filed and the international application includes the necessary components for an international filing date (see PCT Article 11 and MPEP 1810), a Notification of the International Application Number and of the International Filing Date (Form PCT/RO/105) will be issued in due course, subject to prescriptions concerning national security, and the date shown on this Acknowledgement Receipt will establish the international filing date of the application.

DocCode – SCORE

SCORE Placeholder Sheet for IFW Content

Application Number: 16696383 Document Date: 11/26/2019

The presence of this form in the IFW record indicates that the following document type was received in electronic format on the date identified above. This content is stored in the SCORE database.

Since this was an electronic submission, there is no physical artifact folder, no artifact folder is recorded in PALM, and no paper documents or physical media exist. The TIFF images in the IFW record were created from the original documents that are stored in SCORE.

- Drawing

At the time of document entry (noted above):

- USPTO employees may access SCORE content via DAV or via the SCORE web page.
- External customers may access SCORE content via PAIR using the Supplemental Content tab.

Form Revision Date: March 1, 2019

UNITED STATES PATENT AND TRADEMARK OFFICE

UNITED STATES DEPARTMENT OF COMMERCE
United States Patent and Trademark Office
Address: COMMISSIONER FOR PATENTS
P.O. Box 1450
Alexandria, Virginia 22313-1450
www.uspto.gov

APPLICATION NUMBER	FILING or 371(c) DATE	GRP ART UNIT	FIL FEE REC'D	ATTY.DOCKET.NO	TOT CLAIMS	IND CLAIMS
16/696,383	11/26/2019	3723	1720	00058P00US	20	3

CONFIRMATION NO. 6816

FILING RECEIPT

144588
Klein Tools, Inc
450 Bond Street
Lincolnshire, IL 60069

OC000000113384644

Date Mailed: 12/18/2019

Receipt is acknowledged of this non-provisional utility patent application. The application will be taken up for examination in due course. Applicant will be notified as to the results of the examination. Any correspondence concerning the application must include the following identification information: the U.S. APPLICATION NUMBER, FILING DATE, NAME OF FIRST INVENTOR, and TITLE OF INVENTION. Fees transmitted by check or draft are subject to collection.

Please verify the accuracy of the data presented on this receipt. If an error is noted on this Filing Receipt, please submit a written request for a corrected Filing Receipt, including a properly marked-up ADS showing the changes with strike-through for deletions and underlining for additions. If you received a "Notice to File Missing Parts" or other Notice requiring a response for this application, please submit any request for correction to this Filing Receipt with your reply to the Notice. When the USPTO processes the reply to the Notice, the USPTO will generate another Filing Receipt incorporating the requested corrections provided that the request is grantable.

Inventor(s)

Daniel R. Pearson, Fortworth, TX;

Applicant(s)

Klein Tools, Inc., Lincolnshire, IL;

Assignment For Published Patent Application

Klein Tools, Inc., Lincolnshire, IL

Power of Attorney: None

Domestic Applications for which benefit is claimed - None.
A proper domestic benefit claim must be provided in an Application Data Sheet in order to constitute a claim for domestic benefit. See 37 CFR 1.76 and 1.78.

Foreign Applications for which priority is claimed (You may be eligible to benefit from the **Patent Prosecution Highway** program at the USPTO. Please see http://www.uspto.gov for more information.) - None.
Foreign application information must be provided in an Application Data Sheet in order to constitute a claim to foreign priority. See 37 CFR 1.55 and 1.76.

Permission to Access Application via Priority Document Exchange: Yes

Permission to Access Search Results: Yes

Applicant may provide or rescind an authorization for access using Form PTO/SB/39 or Form PTO/SB/69 as appropriate.

If Required, Foreign Filing License Granted: 12/17/2019

The country code and number of your priority application, to be used for filing abroad under the Paris Convention, is **US 16/696,383**

Projected Publication Date: 05/27/2021

Non-Publication Request: No

Early Publication Request: No
Title

GLOW FISH TAPE SYSTEM

Preliminary Class

254

Statement under 37 CFR 1.55 or 1.78 for AIA (First Inventor to File) Transition Applications: No

PROTECTING YOUR INVENTION OUTSIDE THE UNITED STATES

Since the rights granted by a U.S. patent extend only throughout the territory of the United States and have no effect in a foreign country, an inventor who wishes patent protection in another country must apply for a patent in a specific country or in regional patent offices. Applicants may wish to consider the filing of an international application under the Patent Cooperation Treaty (PCT). An international (PCT) application generally has the same effect as a regular national patent application in each PCT-member country. The PCT process **simplifies** the filing of patent applications on the same invention in member countries, but **does not result** in a grant of "an international patent" and does not eliminate the need of applicants to file additional documents and fees in countries where patent protection is desired.

Almost every country has its own patent law, and a person desiring a patent in a particular country must make an application for patent in that country in accordance with its particular laws. Since the laws of many countries differ in various respects from the patent law of the United States, applicants are advised to seek guidance from specific foreign countries to ensure that patent rights are not lost prematurely.

Applicants also are advised that in the case of inventions made in the United States, the Director of the USPTO must issue a license before applicants can apply for a patent in a foreign country. The filing of a U.S. patent application serves as a request for a foreign filing license. The application's filing receipt contains further information and guidance as to the status of applicant's license for foreign filing.

Applicants may wish to consult the USPTO booklet, "General Information Concerning Patents" (specifically, the section entitled "Treaties and Foreign Patents") for more information on timeframes and deadlines for filing foreign patent applications. The guide is available either by contacting the USPTO Contact Center at 800-786-9199, or it can be viewed on the USPTO website at http://www.uspto.gov/web/offices/pac/doc/general/index.html.

For information on preventing theft of your intellectual property (patents, trademarks and copyrights), you may wish to consult the U.S. Government website, http://www.stopfakes.gov. Part of a Department of Commerce initiative, this website includes self-help "toolkits" giving innovators guidance on how to protect intellectual property in specific

countries such as China, Korea and Mexico. For questions regarding patent enforcement issues, applicants may call the U.S. Government hotline at 1-866-999-HALT (1-866-999-4258).

LICENSE FOR FOREIGN FILING UNDER

Title 35, United States Code, Section 184

Title 37, Code of Federal Regulations, 5.11 & 5.15

GRANTED

The applicant has been granted a license under 35 U.S.C. 184, if the phrase "IF REQUIRED, FOREIGN FILING LICENSE GRANTED" followed by a date appears on this form. Such licenses are issued in all applications where the conditions for issuance of a license have been met, regardless of whether or not a license may be required as set forth in 37 CFR 5.15. The scope and limitations of this license are set forth in 37 CFR 5.15(a) unless an earlier license has been issued under 37 CFR 5.15(b). The license is subject to revocation upon written notification. The date indicated is the effective date of the license, unless an earlier license of similar scope has been granted under 37 CFR 5.13 or 5.14.

This license is to be retained by the licensee and may be used at any time on or after the effective date thereof unless it is revoked. This license is automatically transferred to any related applications(s) filed under 37 CFR 1.53(d). This license is not retroactive.

The grant of a license does not in any way lessen the responsibility of a licensee for the security of the subject matter as imposed by any Government contract or the provisions of existing laws relating to espionage and the national security or the export of technical data. Licensees should apprise themselves of current regulations especially with respect to certain countries, of other agencies, particularly the Office of Defense Trade Controls, Department of State (with respect to Arms, Munitions and Implements of War (22 CFR 121-128)); the Bureau of Industry and Security, Department of Commerce (15 CFR parts 730-774); the Office of Foreign AssetsControl, Department of Treasury (31 CFR Parts 500+) and the Department of Energy.

NOT GRANTED

No license under 35 U.S.C. 184 has been granted at this time, if the phrase "IF REQUIRED, FOREIGN FILING LICENSE GRANTED" DOES NOT appear on this form. Applicant may still petition for a license under 37 CFR 5.12, if a license is desired before the expiration of 6 months from the filing date of the application. If 6 months has lapsed from the filing date of this application and the licensee has not received any indication of a secrecy order under 35 U.S.C. 181, the licensee may foreign file the application pursuant to 37 CFR 5.15(b).

SelectUSA

The United States represents the largest, most dynamic marketplace in the world and is an unparalleled location for business investment, innovation, and commercialization of new technologies. The U.S. offers tremendous resources and advantages for those who invest and manufacture goods here. Through SelectUSA, our nation works to promote and facilitate business investment. SelectUSA provides information assistance to the international investor community; serves as an ombudsman for existing and potential investors; advocates on behalf of U.S. cities, states, and regions competing for global investment; and counsels U.S. economic development organizations on investment attraction best practices. To learn more about why the United States is the best country in the world to develop

technology, manufacture products, deliver services, and grow your business, visit http://www.SelectUSA.gov or call +1-202-482-6800.

PATENT APPLICATION FEE DETERMINATION RECORD Substitute for Form PTO-875	Application or Docket Number 16/696,383

APPLICATION AS FILED - PART I

FOR	(Column 1) NUMBER FILED	(Column 2) NUMBER EXTRA	SMALL ENTITY RATE($)	SMALL ENTITY FEE($)	OR	OTHER THAN SMALL ENTITY RATE($)	OTHER THAN SMALL ENTITY FEE($)
BASIC FEE (37 CFR 1.16(a), (b), or (c))	N/A	N/A	N/A			N/A	300
SEARCH FEE (37 CFR 1.16(k), (i), or (m))	N/A	N/A	N/A			N/A	660
EXAMINATION FEE (37 CFR 1.16(o), (p), or (q))	N/A	N/A	N/A			N/A	760
TOTAL CLAIMS (37 CFR 1.16(i))	20 minus 20 =	*			OR	x 100 =	0.00
INDEPENDENT CLAIMS (37 CFR 1.16(h))	3 minus 3 =	*				x 460 =	0.00
APPLICATION SIZE FEE (37 CFR 1.16(s))	If the specification and drawings exceed 100 sheets of paper, the application size fee due is $310 ($155 for small entity) for each additional 50 sheets or fraction thereof. See 35 U.S.C. 41(a)(1)(G) and 37 CFR 1.16(s).						0.00
MULTIPLE DEPENDENT CLAIM PRESENT (37 CFR 1.16(j))							0.00
* If the difference in column 1 is less than zero, enter "0" in column 2.			TOTAL			TOTAL	1720

APPLICATION AS AMENDED - PART II

		(Column 1) CLAIMS REMAINING AFTER AMENDMENT		(Column 2) HIGHEST NUMBER PREVIOUSLY PAID FOR	(Column 3) PRESENT EXTRA	SMALL ENTITY RATE($)	SMALL ENTITY ADDITIONAL FEE($)	OR	OTHER THAN SMALL ENTITY RATE($)	OTHER THAN SMALL ENTITY ADDITIONAL FEE($)
AMENDMENT A	Total (37 CFR 1.16(i))	*	Minus	**	=	x =		OR	x =	
AMENDMENT A	Independent (37 CFR 1.16(h))	*	Minus	***	=	x =		OR	x =	
AMENDMENT A	Application Size Fee (37 CFR 1.16(s))									
AMENDMENT A	FIRST PRESENTATION OF MULTIPLE DEPENDENT CLAIM (37 CFR 1.16(j))							OR		
						TOTAL ADD'L FEE		OR	TOTAL ADD'L FEE	

		(Column 1) CLAIMS REMAINING AFTER AMENDMENT		(Column 2) HIGHEST NUMBER PREVIOUSLY PAID FOR	(Column 3) PRESENT EXTRA	RATE($)	ADDITIONAL FEE($)		RATE($)	ADDITIONAL FEE($)
AMENDMENT B	Total (37 CFR 1.16(i))	*	Minus	**	=	x =		OR	x =	
AMENDMENT B	Independent (37 CFR 1.16(h))	*	Minus	***	=	x =		OR	x =	
AMENDMENT B	Application Size Fee (37 CFR 1.16(s))									
AMENDMENT B	FIRST PRESENTATION OF MULTIPLE DEPENDENT CLAIM (37 CFR 1.16(j))							OR		
						TOTAL ADD'L FEE		OR	TOTAL ADD'L FEE	

* If the entry in column 1 is less than the entry in column 2, write "0" in column 3.
** If the "Highest Number Previously Paid For" IN THIS SPACE is less than 20, enter "20".
*** If the "Highest Number Previously Paid For" IN THIS SPACE is less than 3, enter "3".
The "Highest Number Previously Paid For" (Total or Independent) is the highest found in the appropriate box in column 1.

PTO/AIA/82A (07-12)
Approved for use through 11/30/2014. OMB 0651-0035
U.S. Patent and Trademark Office; U.S. DEPARTMENT OF COMMERCE
Under the Paperwork Reduction Act of 1995, no persons are required to respond to a collection of information unless it displays a valid OMB control number.

TRANSMITTAL FOR POWER OF ATTORNEY TO ONE OR MORE REGISTERED PRACTITIONERS

NOTE: This form is to be submitted with the Power of Attorney by Applicant form (PTO/AIA/82B or equivalent) to identify the application to which the Power of Attorney is directed, in accordance with 37 CFR 1.5. If the Power of Attorney by Applicant form is not accompanied by this transmittal form or an equivalent, the Power of Attorney will not be recognized in the application.

Application Number	16/696,383
Filing Date	November 26, 2019
First Named Inventor	Daniel R. Pearson
Title	Glow Fish Tape System
Art Unit	
Examiner Name	
Attorney Docket Number	751391

SIGNATURE of Applicant or Patent Practitioner

Signature	/Elias P. Soupos/	Date	December 4, 2020
Name	Elias P. Soupos	Telephone	(312) 616-5600
Registration Number	57,375		

NOTE: This form must be signed in accordance with 37 CFR 1.33. See 37 CFR 1.4(d) for signature requirements and certifications.

*Total of 1 forms are submitted.

This collection of information is required by 37 CFR 1.31, 1.32 and 1.33. The information is required to obtain or retain a benefit by the public which is to file (and by the USPTO to process) an application. Confidentiality is governed by 35 U.S.C. 122 and 37 CFR 1.11 and 1.14. This collection is estimated to take 3 minutes to complete, including gathering, preparing, and submitting the completed application form to the USPTO. Time will vary depending upon the individual case. Any comments on the amount of time you require to complete this form and/or suggestions for reducing this burden, should be sent to the Chief Information Officer, U.S. Patent and Trademark Office, U.S. Department of Commerce, P.O. Box 1450, Alexandria, VA 22313-1450. DO NOT SEND FEES OR COMPLETED FORMS TO THIS ADDRESS. **SEND TO: Commissioner for Patents, P.O. Box 1450, Alexandria, VA 22313-1450.**

If you need assistance in completing the form, call 1-800-PTO-9199 and select option 2.

Doc Code: PA..
Document Description: Power of Attorney

PTO/AIA/82B (07-13)
Approved for use through 11/30/2014. OMB 0651-0051
U.S. Patent and Trademark Office; U.S. DEPARTMENT OF COMMERCE
Under the Paperwork Reduction Act of 1995, no persons are required to respond to a collection of information unless it displays a valid OMB control number

POWER OF ATTORNEY BY APPLICANT

I hereby revoke all previous powers of attorney given in the application identified in either the attached transmittal letter or the boxes below.

Application Number	Filing Date

(Note: The boxes above may be left blank if information is provided on form PTO/AIA/82A.)

☑ I hereby appoint the Patent Practitioner(s) associated with the following Customer Number as my/our attorney(s) or agent(s), and to transact all business in the United States Patent and Trademark Office connected therewith for the application referenced in the attached transmittal letter (form PTO/AIA/82A) or identified above: 161268

OR

☐ I hereby appoint Practitioner(s) named in the attached list (form PTO/AIA/82C) as my/our attorney(s) or agent(s), and to transact all business in the United States Patent and Trademark Office connected therewith for the patent application referenced in the attached transmittal letter (form PTO/AIA/82A) or identified above. (Note: Complete form PTO/AIA/82C.)

Please recognize or change the correspondence address for the application identified in the attached transmittal letter or the boxes above to:

☑ The address associated with the above-mentioned Customer Number

OR

☐ The address associated with Customer Number:

OR

Firm or Individual Name					
Address					
City		State		Zip	
Country					
Telephone		Email			

I am the Applicant (if the Applicant is a juristic entity, list the Applicant name in the box):

Klein Tools, Inc.

☐ Inventor or Joint Inventor (title not required below)

☐ Legal Representative of a Deceased or Legally Incapacitated Inventor (title not required below)

☑ Assignee or Person to Whom the Inventor is Under an Obligation to Assign (provide signer's title if applicant is a juristic entity)

☐ Person Who Otherwise Shows Sufficient Proprietary Interest (e.g., a petition under 37 CFR 1.46(b)(2) was granted in the application or is concurrently being filed with this document) (provide signer's title if applicant is a juristic entity)

SIGNATURE of Applicant for Patent

The undersigned (whose title is supplied below) is authorized to act on behalf of the applicant (e.g., where the applicant is a juristic entity).

Signature	[signature]	Date (Optional)	4-9-19
Name	Robert J. Vechioli		
Title	VP, General Counsel & Corporate Secretary		

NOTE: Signature - This form must be signed by the applicant in accordance with 37 CFR 1.33. See 37 CFR 1.4 for signature requirements and certifications. If more than one applicant, use multiple forms.

☑ Total of 1 forms are submitted.

This collection of information is required by 37 CFR 1.131, 1.32, and 1.33. The information is required to obtain or retain a benefit by the public which is to file (and by the USPTO to process) an application. Confidentiality is governed by 35 U.S.C. 122 and 37 CFR 1.11 and 1.14. This collection is estimated to take 3 minutes to complete, including gathering, preparing, and submitting the completed application form to the USPTO. Time will vary depending upon the individual case. Any comments on the amount of time you require to complete this form and/or suggestions for reducing this burden, should be sent to the Chief Information Officer, U.S. Patent and Trademark Office, U.S. Department of Commerce, P.O. Box 1450, Alexandria, VA 22313-1450. DO NOT SEND FEES OR COMPLETED FORMS TO THIS ADDRESS. **SEND TO: Commissioner for Patents, P.O. Box 1450, Alexandria, VA 22313-1450.**

If you need assistance in completing the form, call 1-800-PTO-9199 and select option 2.

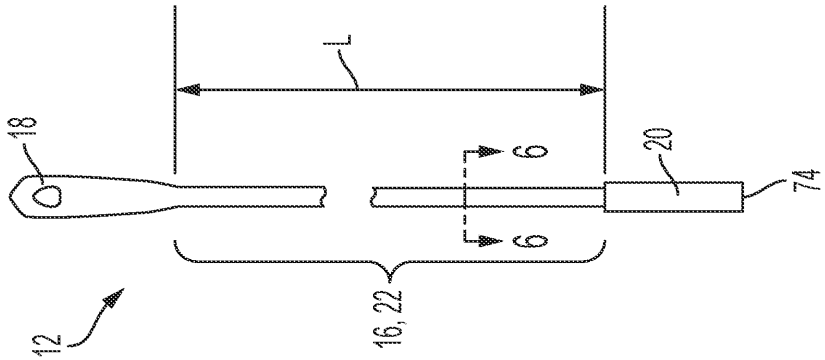
12
18
16, 22
6
6
L
20
74

FIG. 2

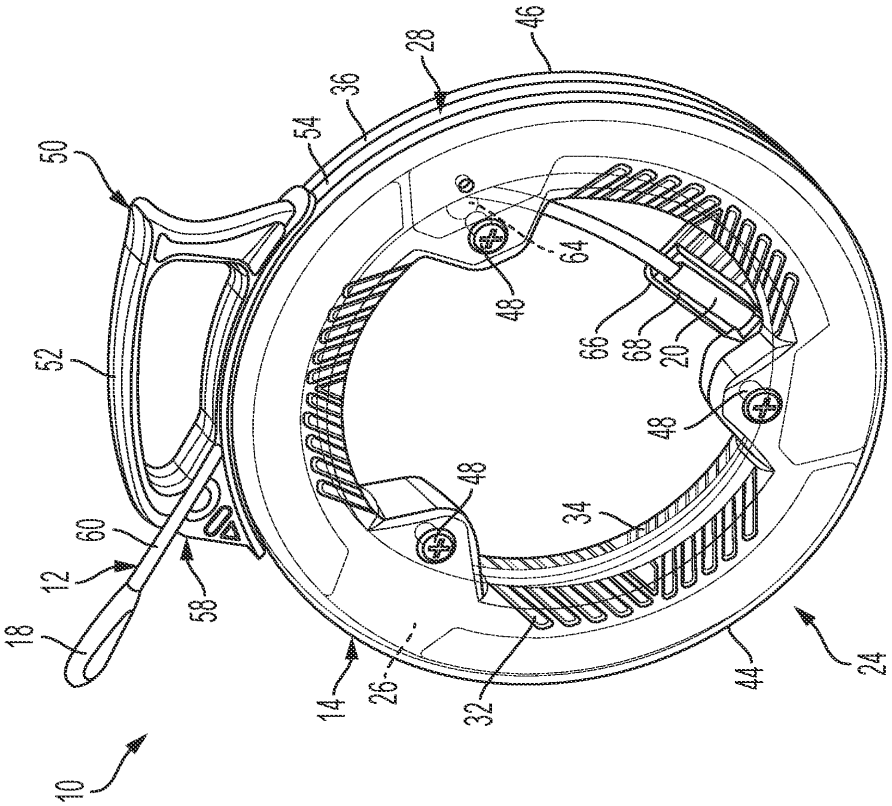
10
18
12
60
58
52
50
54
36
28
46
14
26
32
44
24
34
48
48
48
64
66
68
20

FIG. 1

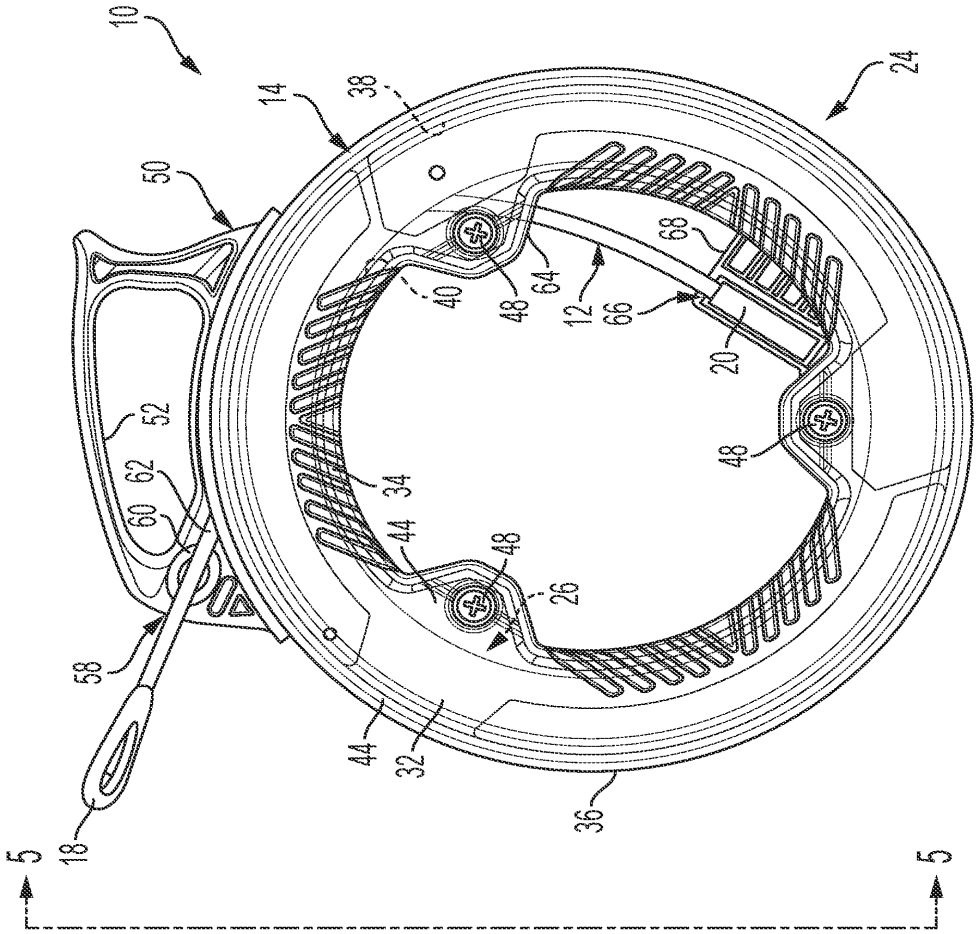
10
14
38
24
50
68
64
48
40
12
66
20
52
62
60
34
44
48
26
58
44
32
36
18
5
5

FIG. 3

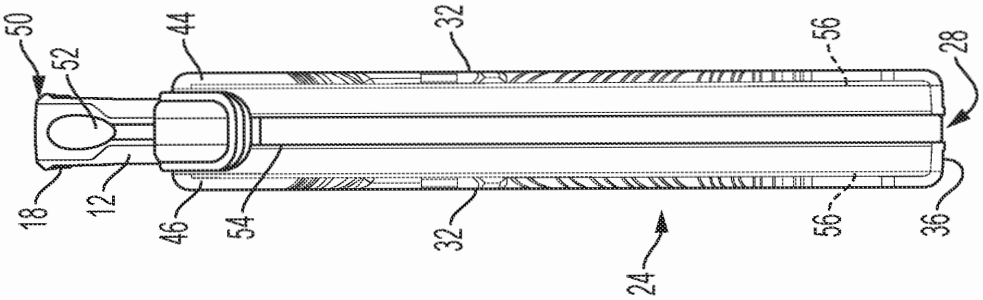
50
52
18
12
44
46
54
32
32
24
56
56
28
36

FIG. 5

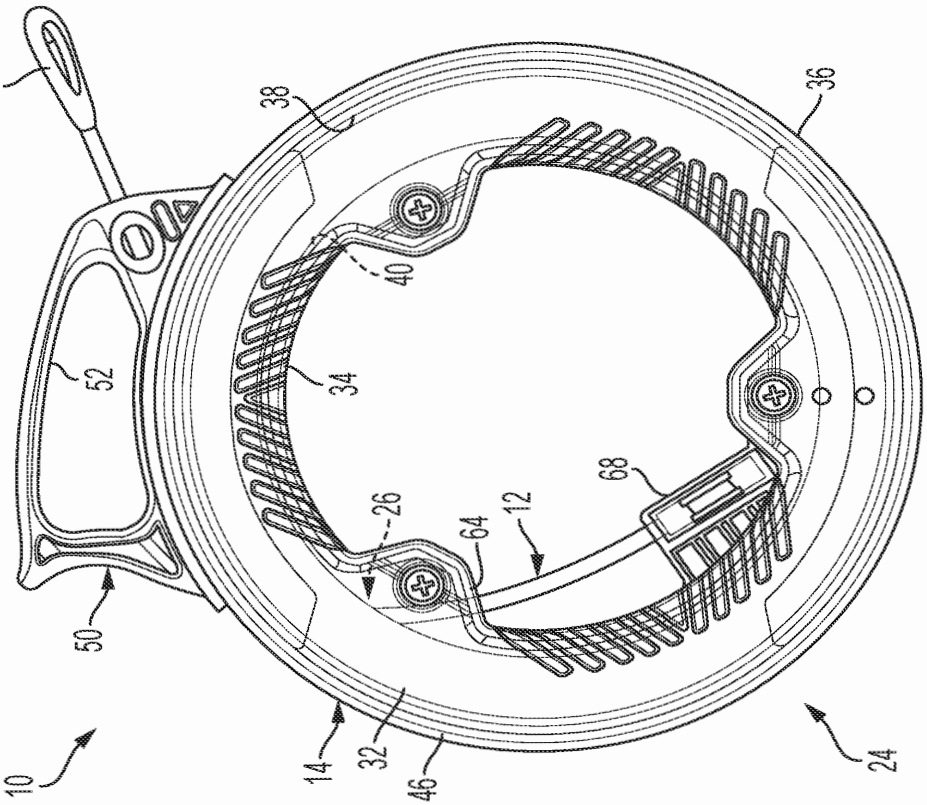
18
52
50
10
38
40
34
26
64
12
68
14
32
46
36
24

FIG. 4

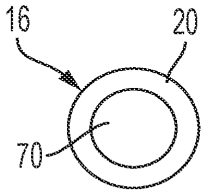

FIG. 6A

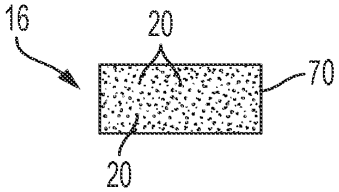

FIG. 6B

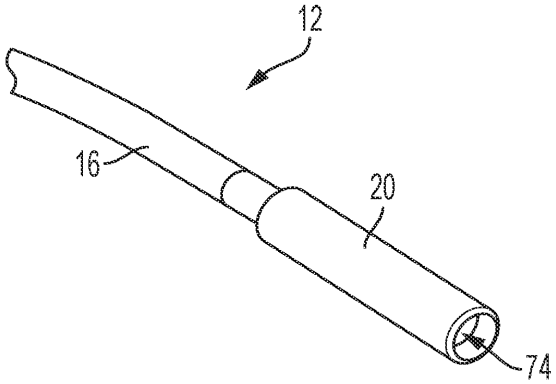

FIG. 7

Electronic Acknowledgement Receipt

EFS ID:	41298863
Application Number:	16696383
International Application Number:	
Confirmation Number:	6816
Title of Invention:	GLOW FISH TAPE SYSTEM
First Named Inventor/Applicant Name:	Daniel R. Pearson
Customer Number:	144588
Filer:	Elias Panos Soupos/Robert Holland
Filer Authorized By:	Elias Panos Soupos
Attorney Docket Number:	00058P00US
Receipt Date:	04-DEC-2020
Filing Date:	26-NOV-2019
Time Stamp:	14:37:59
Application Type:	Utility under 35 USC 111(a)

Payment information:

Submitted with Payment	no

File Listing:

Document Number	Document Description	File Name	File Size(Bytes)/ Message Digest	Multi Part /.zip	Pages (if appl.)
1	Transmittal Letter	Submission_of_Formal_Drawings.pdf	83196 d7f4e7f4b3f6460c51c7b372bff3d52e1291bdb8	no	1

Warnings:

Information:					
2	Power of Attorney	POA.pdf	366517 7d111e49537b118481a1907366e2b85b518bc1b8	no	2
Warnings:					
Information:					
3	Drawings-only black and white line drawings	Drawings-Replacement.pdf	155939 ac492dce87a0bee0b9bf514b03e93b093c85a666	no	4
Warnings:					
Information:					
			Total Files Size (in bytes):	605652	

This Acknowledgement Receipt evidences receipt on the noted date by the USPTO of the indicated documents, characterized by the applicant, and including page counts, where applicable. It serves as evidence of receipt similar to a Post Card, as described in MPEP 503.

New Applications Under 35 U.S.C. 111
If a new application is being filed and the application includes the necessary components for a filing date (see 37 CFR 1.53(b)-(d) and MPEP 506), a Filing Receipt (37 CFR 1.54) will be issued in due course and the date shown on this Acknowledgement Receipt will establish the filing date of the application.
National Stage of an International Application under 35 U.S.C. 371
If a timely submission to enter the national stage of an international application is compliant with the conditions of 35 U.S.C. 371 and other applicable requirements a Form PCT/DO/EO/903 indicating acceptance of the application as a national stage submission under 35 U.S.C. 371 will be issued in addition to the Filing Receipt, in due course.
New International Application Filed with the USPTO as a Receiving Office
If a new international application is being filed and the international application includes the necessary components for an international filing date (see PCT Article 11 and MPEP 1810), a Notification of the International Application Number and of the International Filing Date (Form PCT/RO/105) will be issued in due course, subject to prescriptions concerning national security, and the date shown on this Acknowledgement Receipt will establish the international filing date of the application.

IN THE UNITED STATES PATENT AND TRADEMARK OFFICE

Patent Application No. 16/696,383

Confirmation No. 6816

Attorney Docket No. 746860 (Client ref. no. 00058P00US)

SUBMISSION OF FORMAL DRAWINGS

Applicant encloses herewith 6 sheets of formal drawings and requests that the same be made of record in this application as a substitute for the drawings filed with the application on November 26, 2019.

The Commissioner is hereby authorized to charge any fees which may be required to Account No. 12-1216.

Respectfully submitted,

/Elias P. Soupos/

Elias P. Soupos, Reg. No. 57,375
Telephone: 312-616-5600
Facsimile: 312-616-5700

Leydig

Date: December 4, 2020

UNITED STATES PATENT AND TRADEMARK OFFICE

UNITED STATES DEPARTMENT OF COMMERCE
United States Patent and Trademark Office
Address: COMMISSIONER FOR PATENTS
P.O. Box 1450
Alexandria, Virginia 22313-1450
www.uspto.gov

APPLICATION NUMBER	FILING OR 371(C) DATE	FIRST NAMED APPLICANT	ATTY. DOCKET NO./TITLE
16/696,383	11/26/2019	Daniel R. Pearson	751391

CONFIRMATION NO. 6816

POA ACCEPTANCE LETTER

161268
LEYDIG VOIT & MAYER, LTD (Klein Tools)
TWO PRUDENTIAL PLAZA, SUITE 4900
180 NORTH STETSON AVENUE
CHICAGO, IL 60601-6731

OC000000121844043

Date Mailed: 12/08/2020

NOTICE OF ACCEPTANCE OF POWER OF ATTORNEY

This is in response to the Power of Attorney filed 12/04/2020.

The Power of Attorney in this application is accepted. Correspondence in this application will be mailed to the above address as provided by 37 CFR 1.33.

Questions about the contents of this notice and the requirements it sets forth should be directed to the Office of Data Management, Application Assistance Unit, at **(571) 272-4000** or **(571) 272-4200** or **1-888-786-0101**.

/cnguyen/

Substitute for Form 1449A/B/PTO **INFORMATION DISCLOSURE STATEMENT BY APPLICANT**				Patent Application No.	16/696,383
				Confirmation No.	6816
Sheet	1	of	1	Attorney Docket No.	751391

U.S. PATENT DOCUMENTS

Examiner Initials	Doc. No.	U.S. Patent Document		Name of Patentee or Applicant	Date of Publication	Filing Date If Appropriate
		Application or Patent Number	Kind Code			
	AA	6,293,519	B1	Farretta	09-25-2001	
	AB	2004/0206529	A1	Sawyer et al.	10-21-2004	
	AC	2009/0257221	A1	Patterson	10-15-2009	
	AD	2017/0213431	A1	Huo	07-27-2017	

FOREIGN PATENT DOCUMENTS

Examiner Initials	Doc. No.	Foreign Patent Document			Name of Patentee or Applicant	Date of Publication	Translation *
		Office	Application or Patent Number	Kind Code			
	AE	EP	1914508	A2	The Stanley Works	04-23-2008	
	AF	JP	2001-174202	A	Hara Rule Mfg.	06-29-2001	English abstract

OTHER - NON PATENT LITERATURE DOCUMENTS

Examiner Initials	Doc. No.	Include name of the author (in CAPITAL LETTERS), title of the article (when appropriate), title of the item (book, magazine, journal, serial, symposium, catalog, etc.), date, page(s), volume-issue number (s), publisher, city and/or country where published.	Translation *
	AG	UNITED KINGDOM INTELLECTUAL PROPERTY OFFICE, Search Report in United Kingdom Patent Application No. GB2018458.6, 4 pp. (Apr. 23, 2021)	

Examiner Signature		Date Considered	

* If the reference is not in English, then at least one of the following is provided: (a) an English translation in whole or in part or (b) a concise statement of relevance in the form of, for example, an English language counterpart, an English-language abstract, or an English-language version of the search report or action by a foreign patent office in a counterpart foreign application indicating the degree of relevance found by the foreign office.

(19) Europäisches Patentamt
European Patent Office
Office européen des brevets

(11) EP 1 914 508 A2

(12) EUROPEAN PATENT APPLICATION

(43) Date of publication:
23.04.2008 Bulletin 2008/17

(51) Int Cl.:
G01B 3/10 (2006.01)

(21) Application number: 07117560.8

(22) Date of filing: 28.09.2007

(84) Designated Contracting States:
AT BE BG CH CY CZ DE DK EE ES FI FR GB GR HU IE IS IT LI LT LU LV MC MT NL PL PT RO SE SI SK TR
Designated Extension States:
AL BA HR MK RS

(30) Priority: 16.10.2006 US 581071

(71) Applicant: THE STANLEY WORKS
New Britain, CT 06053 (US)

(72) Inventor: Murray, John
Canton, CT 06019 (US)

(74) Representative: Freeman, Avi
Beck Greener
Fulwood House,
12 Fulwood Place,
London WC1V 6HR (GB)

(54) **A retractable rule assembly and a measuring device**

(57) The invention provides a retractable rule assembly, comprising a housing assembly; a reel rotatably mounted in said housing assembly; an elongated blade formed of a ribbon of metal being wound on the reel, said elongated blade having a concavo-convex configuration when extended from said housing assembly, said elongated blade having measuring indicia formed on the concave side thereof, and a translucent fluorescent material provided on said concave side of said blade and overlying the indicia; a coil spring formed of a ribbon of metal constructed to rotate said reel in said housing assembly in a direction to wind up the elongated blade onto said reel; and a blade holding assembly constructed to hold the blade in a position of extension outwardly of said housing assembly.

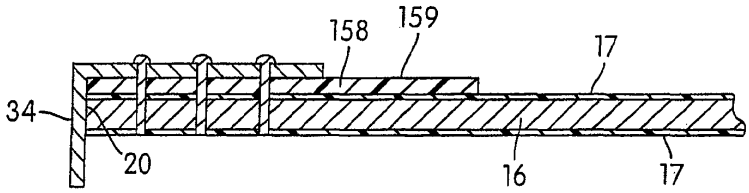

FIG. 5a

EP 1 914 508 A2

Printed by Jouve, 75001 PARIS (FR)

Description

[0001] The present invention relates to a retractable rule assembly and a measuring device.

[0002] In embodiments, this invention is generally related to measuring devices.

[0003] Measuring devices are well known in the art. Other measuring devices include retractable tape rule assemblies, such as that disclosed in U.S. Patent No. 6,804,899, hereby incorporated by reference. There is a constant need in the tool industry for measuring devices with improved utility.

[0004] According to a first aspect of the present invention, there is provided a retractable rule assembly, comprising a housing assembly; a reel rotatably mounted in said housing assembly; an elongated blade formed of a ribbon of metal being wound on the reel, said elongated blade having a concavo-convex configuration when extended from said housing assembly, said elongated blade having measuring indicia formed on the concave side thereof, and a translucent fluorescent material provided on said concave side of said blade and overlying the indicia; a coil spring formed of a ribbon of metal constructed to rotate said reel in said housing assembly in a direction to wind up the elongated blade onto said reel; and a blade holding assembly constructed to hold the blade in a position of extension outwardly of said housing assembly.

[0005] According to a second aspect of the present invention, there is provided a measuring device, comprising a base material; measuring indicia formed on the base material, said measuring indicia including lines and numbers; and a translucent fluorescent material provided in overlying relation with respect to said indicia.

[0006] According to a third aspect of the present invention, there is provided a retractable rule assembly, comprising a housing assembly; a reel rotatably mounted in said housing assembly; an elongated blade wound on said reel, said blade having measuring indicia formed thereon, said blade comprising a light energy storage material that is capable of releasing light energy to provide visibility to said indicia in unlit conditions; and a coil spring arranged to rotate said reel in a direction to wind up the blade onto the reel.

[0007] According to a fifth aspect of the present invention, there is provided A retractable rule assembly, comprising a housing assembly; a reel rotatably mounted in said housing assembly; an elongated blade formed of a ribbon of metal being wound on the reel, said elongated blade having a concavo-convex configuration when extended from said housing assembly, a fluorescent layer of material provided on said concave side of said blade, and indicia formed on said fluorescent layer of material; a coil spring formed of a ribbon of metal constructed to rotate said reel in said housing assembly in a direction to wind up the elongated blade onto said reel; and a blade holding assembly constructed to hold the blade in a position of extension outwardly of said housing assembly.

[0008] According to a sixth aspect of the present invention, there is provided a retractable rule assembly, comprising a housing assembly; a reel rotatable in the housing assembly; an elongated blade wound on the reel, the blade having measuring indicia formed thereon, the measuring indicia comprising a light energy storage material capable of releasing light energy in unlit conditions; and a coil spring arranged to rotate the reel in a direction to wind up the blade onto the reel

[0009] One aspect of an invention disclosed herein relates to a tape rule with improved visibility of measuring indicia and other graphics that may be on the tape blade. In accordance with this aspect, there is provided a retractable rule assembly comprising a housing assembly; a reel rotatably mounted in the housing assembly; and an elongated blade formed of a ribbon of metal being wound on the reel. The elongated blade has a concavo-convex configuration when extended from said housing assembly, the elongated blade having measuring indicia formed on the concave side thereof, and a translucent fluorescent material provided on the concave side of said blade and overlying the indicia. A coil spring formed of a ribbon of metal is constructed to rotate the reel in the housing assembly in a direction to wind up the elongated blade; and a blade holding assembly holds the blade in a position of extension outwardly of the housing assembly.

[0010] Another aspect of an invention disclosed herein relates to a measuring device, comprising a base material; measuring indicia formed on the base material, the measuring indicia including lines and numbers; and a translucent fluorescent material provided in overlying relation with respect to the indicia.

[0011] Another aspect of an invention disclosed herein relates to a retractable rule assembly, comprising a housing assembly; a reel rotatably mounted in said housing assembly; an elongated blade wound on said reel, said blade having measuring indicia formed thereon, said blade comprising a light energy storage material that is capable of releasing light energy to provide visibility to said indicia in unlit conditions; and a coil spring constructed to rotate said reel in a direction to wind up the blade onto the reel.

[0012] These and other objectives, features, and advantages of the present invention will become apparent from the following detailed description, the accompanying drawings, and the appended claims.

[0013] Examples of embodiments of the present invention will now be described in detail with reference to the accompanying drawings, in which:

FIG. 1 shows a prospective few of a tape rule assembly constructed according to an embodiment of the present invention;

FIG. 2 shows a front of elevational view of the tape rule assembly;

Milwaukee Electric Tool Corporation
Ex-1015
Page 51 of 237

FIG. 3 shows a side of elevational view of the tape rule assembly;

FIG. 4 shows a cross-sectional view of the tape rule assembly taken through the line 4-4 in FIG. 2 showing a blade thereof in a fully retracted configuration;

FIG. 5 is a view similar to FIG. 4 except showing the blade in a fully extended configuration;

FIGS. 5a-c show three cross sections of configurations of the blade with a film of plastic material on the concave and convex sides, respectively.

FIG. 6 is an enlarged sectional view of a portion of FIG. 5, so as to more clearly illustrate the thumb engaging portion;

FIG. 7a-7d are various embodiments of holding members in accordance with various aspects of the inventions disclosed herein;

FIG. 8a-8d are additional embodiments of holding members in accordance with various aspects of the inventions disclosed herein;

FIG. 9a-d are additional embodiments of holding members, with a resilient portion disposed at the free end thereof.

FIG. 10a-d are various embodiments of thumb engaging portions in accordance with various aspects of the inventions disclosed herein.

FIGS. 1-3 show an exterior view of a retractable rule assembly that is generally designated 10 and is constructed according to the principles of an embodiment of the present invention. The rule assembly 10 includes a housing assembly 12 and a reel 14 that is rotatably mounted inside the housing assembly 12 (best seen in the cross-sectional views of FIGS. 4-5). The reel 14 is mounted in the housing assembly 12 by a reel spindle 15 that is secured within the housing assembly 12 (FIGS. 4-5). An elongated tape rule blade 16 is mounted on the reel 14.

[0014] The blade 16 is formed of a ribbon of metal, the preferred metal being steel, and the top concave surface of the blade is printed with measuring indicia, such as lines and digits (not shown) for measuring lengths and distances. One longitudinal end 18 of the blade 16 is connected to the reel 14 and a second longitudinal free end 20 of the blade 16 extends generally outwardly of the reel 14 (see FIG. 4 and 5c). The blade 16 is constructed and arranged with respect to the housing assembly 12 to extend generally from a position tangential of the reel 14 outwardly through a spaced opening 22 provided in the housing assembly 12 (as shown, for example, in FIG. 4).

[0015] Preferably the reel 14 is made of a molded plastic. The blade 16 is wrapped around the reel and has a proximal end thereof fixed relative to the reel 14 for rotation therewith.

[0016] A coil spring 32 has an interconnection between the housing assembly 12 and the reel 14 to rotate the reel 14 with respect to the housing assembly 12 in a direction to wind the elongated blade 16 about the reel when the blade 16 is extending outwardly of the housing assembly opening 22. In one embodiment, as best seen in FIG. 5, the blade 16 is connected to the reel 14 by virtue of the beginning end (distal end) 33 of the blade within the housing being connected to a terminal end 38 of the spring 32 in a conventional, known manner with the spring 32 having a portion thereof (adjacent the connection with the blade 16) being pinned, clipped by protruding reel portion 37 to an outer periphery of the reel 14. Preferably the spring 32 is a thin, flat ribbon of metal, such as steel.

[0017] The blade 16 is generally movable between a fully retracted position outwardly of the housing assembly 12 to a fully extended position. The fully retracted position of the blade 16 is shown in FIG. 4 and the fully extended position of the blade is shown (in fragmentary view) in FIG. 5. It can be appreciated from a comparison of FIG. 4 and FIG. 5 that as the blade is unwound from the reel 14, the coil spring 32 is wound around the rigidly fixed spindle 15. This winding of the spring around the spindle stores energy in the spring to provide spring powered rewinding of the blade 16 around the reel 14 when the extended blade is released.

[0018] The blade 16 is constructed of a ribbon of sheet metal that is shaped during the manufacturing to have a normal or memory configuration that has a generally arcuate or concavo-convex transverse cross-section. The blade 16 has a layer of paint on both sides thereof, with the paint on the concave side of the blade 16 providing measuring indicia 21. In one embodiment, yellow paint is used for background, with black paint on top of the yellow for the numbers and gradations on the top of the blade. However, any combination of colors may be used. The paint layer on each side of the blade preferably has a thickness of about .0001" - .0014" (about 0.00025-0.0036 cm), more preferably between .0006" - .0012" (about 0.00015-0.003 cm), and more preferably between .0008" -.0010" (about 0.002-0.0025 cm). A water-based paint or solvent-based paint is preferred. The "paint" as referred to herein is also sometimes referred to in the art as "ink." In order to reduce damage to the paint layer from rust, corrosion and wear, the paint layer on both sides of the entire blade length is coated with a thin, clear plastic protective coating 17 as shown in FIG. 5a. One such coating may employ materials as described in U.S. Patent 3,121,957, hereby incorporated by reference. The thin plastic coating 17 is preferably provided throughout the length of the blade and on both sides of the blade, with each side of the blade having a coating

Milwaukee Electric Tool Corporation
Ex-1015
Page 52 of 237

thickness of less than .004" (about 0.01 cm), and more preferably between about .002 (about 0.005 cm)" and about .003" (about 0.0075 cm). Any appropriate flexible or semi-flexible material may be used, but Mylar, Polyester, Nylon, Lacquer or Acrylic are most preferred. The material of coating 17 can be of a film type, or of a curable liquid type. In addition, an appropriate thermoset, rubber, thermoplastic, thermoplastic elastomer, polyamide, polyvinyl, silicone, polyimide, polyethylene, fluoropolymer, polyurethane or polyethylene terephthalate may be also used, for example. The coating 17 provides a wear-resistant layer that reduces or inhibits wear of the indicia on the blade. It also preferably provides a sealing function to inhibit rust formation on the blade. If the plastic coating 17 is omitted, it is preferable to use a wear resistant paint to provide the measuring indicia.

[0019] In accordance with one aspect of the present invention, the coating 17 provided on the top or upper portion of the blade (that covers the measuring indicia and numerals) has a fluorescent dye or material additive mixed therein. The fluorescent dye within the coating 17 retains the translucency (or transparency) of the coating so that the painted indicia therebeneath on the paint layer can be clearly viewed. The fluorescent coating applied over the printed tape measure blade graphics, numbers and measuring graduation improves the ease of identification and readability of such blade graphics, particularly in dimly lit conditions. The top coating 17 creates contrast and illumination that also provides improved readability in brightly lit conditions.

[0020] In one embodiment, the coating 17 has a thickness of between about .0002" to .010 (about 0.0005-0.025 cm)".

[0021] As used herein, the term "translucent" is meant to broadly encompass transparent, clear, and light diffusing, but such that indicia or other markings therebehind can be viewed.

[0022] In another embodiment, the coating 17 on both the top and bottom of the blade are provided with the fluorescent additive.

[0023] When a portion of the normally concavo-convex cross-sectional blade 16 is wound about the reel 14, the wound portion has a flattened transverse cross-section and the wound layers of the coiled blade provide the wound blade with an abutting volute coil configuration. It can therefore be understood, that when the blade 16 is wound around the reel 14, it has a flat cross-section and when the blade 16 is withdrawn from the housing assembly 12 to measure an object, it returns to the concavo-convex cross-section. For an example, see U.S. Patent No. 6,804,899, which has been incorporated by reference. The coil spring 32 is constructed and arranged between the housing assembly 12 and the reel 14 to rotate the reel 14 about the spindle with respect to the housing assembly 12 in a direction to wind up the elongated blade 16 into the housing when extending outwardly of the housing assembly opening 22 in a normal concavo-convex cross-sectional configuration onto the reel 14 in an abutting volute coil formation in a flattened cross-sectional configuration. The concavo-convex cross-section provides the extended blade with rigidity and maintains the blade essentially straight in the longitudinal direction.

[0024] A holding assembly, generally designated to 124, is constructed and arranged to be manually actuated to hold the blade 16 in any position of extension outwardly of the housing assembly opening 22 and to release the blade 16 from any position in which it is held. The structure and operation of the holding assembly 124 is best appreciated from a comparison of FIGS. 4-5. The holding assembly 124 includes a holding member 126 mounted on the housing assembly 12 for movement in opposite directions between a normally inoperative position (FIG. 4) and a holding position (FIG. 5). It can be appreciated that the blade holding member 126 is a generally arcuate member that is movable along an arcuate path between the two positions as aforesaid. The holding member 126 has an interior free end portion 128 that is movable into wedging engagement with the tangentially extending portion of the blade 16 to engage and hold the blade against an interior holding structure 130 (FIG. 5) on the housing assembly 12 when the holding member 126 is in its holding position. The free end portion 128 includes a central recess 129 (FIG. 2, for example) that is described in detail below. The holding member 126 has an exterior thumb engaging portion 132 configured to be moved digitally to selectively move the holding member 126 from its normally inoperative position and its holding position. The exterior thumb engaging portion 132 is best seen in FIGS. 1-2.

[0025] In one embodiment, the thumb engaging portion or slide button 132 is constructed to be impact resistant. Specifically, as best seen in FIG. 6, thumb engaging portion 132, in one embodiment is made from a flexible or elastic material, such as a compliant flexible rubber or thermoplastic elastomer "TPE." In one embodiment, the thumb engaging portion 132 exterior surface has perforations 153, as illustrated in FIG. 10a. In another embodiment, the thumb engaging portion 132 exterior surface has either recessed grooves 154, protruding grooves (protrusions) 155, or a combination of both to bias the direction the outer surface deformation upon impact as illustrated in FIGS. 10b-10d. In another embodiment, the thumb engaging portion 132 exterior surface has a non-uniform cross-sectional thickness to facilitate movement of the holding member 126 in the arcuate actuation direction. This also allows the thumb engaging portion 132 to yield in a perpendicular direction or the direction of the impact.

[0026] As seen in FIGS. 5 and 6-9e, the thumb engaging portion 132 is connected to an elongated arcuate flexible body portion 133 that terminates in the interior free end 128. The body portion 133 is made from an appropriate durable flexible plastic. The body portion 133 may be a one-piece molded structure, or may be a plurality of pieces connected together in any suitable manner. The connection 139 between the thumb engaging portion 132

Milwaukee Electric Tool Corporation
Ex-1015
Page 53 of 237

and the body portion 133 can be achieved by an adhesive connection, a welding operation, or a co-molding operation. In one embodiment, the connection 139 is a chemical polymer bond. In another embodiment, the connection 139 is an adhesive bond. In another embodiment, the connection 139 is a mechanical bond. In another embodiment, the connection 139 is a friction fit. In another embodiment, the connection 139 is integrally formed in a co-molding or sequential molding operation with the body portion 133 and thumb engaging portion 132. As illustrated in the enlarged partial view of FIG. 6, a receiving region 135 is provided behind the thumb engaging portion 132. This gap or void allows the flexible thumb engaging portion 132 to deform into the receiving region 135 and thereby absorb and deflect the drop impact energy in the event that the rule assembly 10 is dropped and the portion 132 impacts the ground or other surface. In one embodiment, the receiving region 135 may comprise a void or space. Following the impact and resultant deformation, the thumb engaging portion 132 flexes back to its original form. As a result, the structural integrity of the thumb engaging portion 132 is preserved, as it will not fracture upon impact. The outwardly extending portion 134 is slidably held within and guided by a slot 136 (see FIG. 2) formed within a front part of housing assembly 12 by the members 40, 42. The movement of a lower portion of the holding member 126 is guided by a pair of tabs 131 integrally formed on respective housing members 40, 42 (only one tab is shown in the figures). An integral locking structure 138 on the holding member 126 engages holding structure 140 (FIG. 5) integrally formed on the housing assembly 12 to releasably lock the holding member 126 in the holding position in wedging engagement with the blade 16.

[0027] In one embodiment, the thumb engaging portion 132 deforms a distance that is greater than 50% of the cross-sectional thickness thereof, wherein the thickness measurement is taken at a region of maximum cross-sectional thickness for a portion of the thumb engaging portion 132 that flexes toward the receiving region 135.

[0028] FIGS. 7a-7d illustrate various, non-limiting arrangements for the body portion 133 and thumb engaging portion 132 joined therewith at connection 139. In FIG. 7a, the void 135 is formed between the thumb engaging portion 132 and body portion 133, by having the ends of the thumb engaging portion joined at connection 139 with the body portion 133 as illustrated. In the embodiment of FIG. 7b, the void 135 is formed entirely within the resilient material of the thumb engaging portion 132, which has an exterior end surface thereof joined with the body portion 133, as illustrated. FIG. 7c is similar to FIG. 7b, with the void 135 formed entirely within the thumb engaging portion 132, but has an exterior bottom surface thereof joined with the body portion 133. FIG. 7d illustrates an arrangement wherein the body portion 133 has an outwardly extending neck portion 148 to accommodate the side edges defining slot 136 in the housing (see FIG. 2) as known in the art. As shown, in FIG. 7d, the neck portion 148 joins with a mounting portion 143 to which the thumb engaging portion 132 is joined.

[0029] In one embodiment, the receiving region 135 is comprised of a thru void as seen in FIG. 10a. As shown, the thru void is generally empty and the void is open on either side. In another embodiment, the receiving region 135 is comprised of a plurality of voids, as seen in FIG. 10b.. In another embodiment, the void 135 is entirely enclosed within the thumb engaging portion, as can be appreciated from FIG. 10d. In another embodiment, the receiving region 135 is not a void, but rather comprises a gel, foam, or other material that is of a lower durometer, or a more compliant material than the thumb engaging portion 132, as can be appreciated from FIGS. 8a, 8c and 10c. FIG. 8a illustrates the receiving region 135 comprising a cellular type material. FIG. 8c illustrates the receiving region 135 comprising a gel material. FIGS. 8b and 10c illustrate the receiving region 135 comprising a foam material, which foam material is of a different color than the thumb engaging portion 132, as discussed below. In these embodiments, the receiving region comprise a relatively softer material than that of the resilient thumb engaging portion 132 to allow the thumb engaging portion 132 to deform into the receiving region 135 upon impact. As discussed above, in some embodiments, the receiving region 135 comprises a material of a different color than the thumb engaging portion 132, and can be viewed from a side profile of the device to provide the holding member 126 with a distinctive look, as illustrated in FIG. 10c. For example, in one embodiment, the thumb engaging portion 132 is a black resilient material, and the receiving region 135 comprises a yellow resilient material of lower durometer (e.g., foam or gel), as illustrated in FIG. 10c. In another embodiment, the receiving region 135 is a cellular structure, as seen in FIG. 8a. The cellular structure of the receiving region 135 is of a different (softer durometer) material than the thumb engaging portion 132 and of the holding member 126. However, in one embodiment, the receiving region is of the same material, but a foamed version of a non-foamed thumb engaging portion 132. This facilitates bonding between these materials. In another embodiment, they are of different materials.

[0030] To lock the blade 16 in a given position of extension, as known in the art, the user (while holding the blade 16 outwardly of the housing assembly 12 against the spring force of the coil spring 32) slides the thumb engaging portion 132 downwardly with respective to the housing assembly 12 causing the locking structure 138 to slide over a ramped surface 142 on the holding structure 140 and causing the free end or blade engaging portion 128 to move in a locking direction with respect to the blade 16. The flexible plastic locking structure 138 bends resiliently inwardly slightly as it passes over the holding structure 140. After the free end 128 contacts the blade 16, continued movement of the thumb engaging portion 132 in the locking (downward) direction thereafter

Milwaukee Electric Tool Corporation
Ex-1015
Page 54 of 237

wedges the free end 128 of the flexible body portion 133 against blade 16 to hold the blade 16 in place against the spring force of the coil spring 32 and moves the locking structure 138 into abutting engagement with a locking surface 141 on the holding structure 140. The holding member flexes slightly as the free end 128 is wedged against the blade 16. The abutting engagement between the locking structure 138 and the locking surface 141 locks the holding member 126 in its holding position.

[0031] It can be understood from FIG. 5 that the blade 16 is held in an extended position (against the spring force of the coil spring 32) between the free end 128 of the body portion 133 and the interior holding structure 130 by the downward force exerted by the wedged body portion 133. The interior holding structure 130 (not visible in detail) is a series of longitudinally spaced, transversely extending ribs that are constructed and arranged to support the convex side of the blade 16. When viewed from the point of view of FIG. 5 (i.e., on a transversely directed line of sight), the top surfaces (not visible in the FIGS.) of the ribs cooperate to provide a generally downwardly sloped support (in a direction toward the opening 22) for the blade 16; and when viewed from the front, (i.e., on a longitudinally directed line of sight) the top surfaces (not visible in the figures) of each rib of the interior holding structure 130 are transversely spaced in a concave array to receive and support the convex side of the blade. The ribs can be a plurality of ribs as discussed above, or a single rib. The rib(s) can be formed of a plastic and/or TPE material.

[0032] To release the blade 16, the user pulls upwardly on the thumb engaging portion 132 which causes the locking structure 138 on the plastic holding member 126 to move resiliently outwardly and past the locking surface 141 to release the holding member 126 from engagement with a blade 16. The holding member 126 resiliently returns to its normal arcuate shape. It can be appreciated from FIG. 2 that the recess 129 on the free end 128 of the holding member 126 defines two transversely spaced teeth 147 which have spaced arcuate side surfaces 144 sized to conform to the concave surface of the blade 16 to hold the same in locked position.

[0033] It can be understood that the use of the holding member 126 when a measurement is being taken is optional. When taking a measurement, the user typically holds the housing assembly 12 in one hand and manually pulls the blade 16 out of the housing assembly 12 with the other hand. When a sufficient length of blade 16 has been withdrawn from the housing assembly 12, the user can lock the blade 16 with respect to the housing assembly 12 using the holding member 126 to prevent the blade 16 from retracting back into the housing assembly 12 (under the spring force of spring 32) when the user releases the blade 16. When the measurement has been taken, the user simply releases the holding member 126 from holding engagement with the blade 16 by moving the free end 128 thereof out of wedging engagement with the blade 16 in the manner described above. If the holding member 126 is not used during the taking of a measurement, the user can simply hold the blade 16 with his other hand while the measurement is being taken or, alternatively, the hook member 34 can be placed in hooking engagement with the workpiece to hold the blade 16 outwardly of the housing assembly 12 in a controlled and steady manner against the spring force of spring 32 while the measurement is being taken.

[0034] When the blade 16 is released after taking the measurement, the spring 32 rotates the reel 14 with respect to the housing assembly 12 in a blade-winding direction to wind the blade 16 around the reel 14.

[0035] In one embodiment, the holding member 126 has a resilient portion 150 that comprises a blade engaging surface. The resilient portion 150 is attached to the free end 128 of the holding member 126, as seen in FIG. 9a. In one embodiment, the resilient portion 150 is made of an elastomeric material. In another embodiment, as shown in FIGS. 9b-9d, the resilient portion 150 has a void receiving portion 151 behind or within the resilient portion 150 that enables the resilient portion 150 to deform elastically to a greater extent, in comparison with no receiving portion, when the resilient portion 150 contacts the blade 16. Either arrangement provides for enhanced holding force applied to the blade 16 in comparison with no resilient portion. In one embodiment, the receiving portion 151 at the free end 128 of the holding member 126 is comprised of a void, as seen in FIG. 9b. In one embodiment, the receiving region 151 at the free end 128 of the holding member 126 is not a void, but rather comprises a cellular material (FIG. 9c), or a foam or gel (FIG. 9d).These materials are of a lower durometer, or more compliant material than the resilient portion 150. In one embodiment, the receiving region material is chemically compatible with the resilient portion so as to facilitate overmolding and chemical bonding therebetween. For example, the receiving region material 151 can be a foamed version of the same material as the non-foamed resilient portion 150.

[0036] In one embodiment, a relatively short free end portion of the blade 16 has a film 158 of a clear, translucent (as defined herein) plastic material adhered to the concave and/or to the convex side thereof to protect the blade 16 while the same is out of the housing assembly 12 and while the blade 16 is being retracted under the spring force of the spring 32 back into the housing assembly 12. Though the film 158 may be clear to permit reading of measuring indicia beneath the film, it may also be opaque, particularly in the case where it is on the convex side of the blade 16 as shown in FIG. 5b. Moreover, if an opaque film 158 is used on the concave side of the blade, it may itself contain the measuring indicia for that portion of the blade, so that even if the film obscures printed indicia on the blade 16, the device can still be readily used. Preferably the film 158 is made of polyurethane and is adhered to the blade (i.e., over the paint layer), or, in the case that the blade includes a protective plastic coating 17, to the coating 17, by an acrylic adhe-

Milwaukee Electric Tool Corporation
Ex-1015
Page 55 of 237

sive. Adhesive may not be necessary if the plastic coating is made of the same material as the film, since the two components can chemically bond, for example under heat treatment, obviating the need for adhesive. It is also contemplated to use Mylar® or Nylon® to construct the film. The film 158 has a thickness dimension that is larger than the thickness dimension of the thin plastic coating 17, if coating 17 is provided. In one embodiment, the film 158 has a thickness within the range of approximately 0.006 inches (about 0.015 cm) to approximately 0.014 inches (about 0.036 cm). It is within the scope of the invention to apply this film to the blade of any known tape rule assembly.

[0037] In one embodiment, the film 158 is self-adhering and is placed over several leading inches (preferably within a broad range of approximately 2 inches to approximately 12 inches) of the free end 20 of the blade 16, including the portion of the blade on which the hook member 34 is disposed so that the film goes under the hook member 34 all the way to the free end 20 of the blade 16. In another embodiment, the film 158 is applied along a length from the free end 20 of the blade 16 that is less than 10.5 inches; and in another embodiment, the length of the blade 16 from the free end thereof that is covered by the film 158 is approximately 6 inches. In one embodiment, the film-covered portion end at approximately the point on the blade 16 where the volutes of the coiled blade are in overlying relation to one another when the blade 16 is in its fully retracted configuration. Typically in a tape rule assembly, the tape blade starts to wrap on itself at approximately 9.5 inches when a typical reel size of approximately 2.9 inches in outer diameter is used in the construction. The film 158 is provided because most failures in a rule blade 16 occur within the first six inches of the free end of the blade 16 from cracks or tearing. The cracks or tearing occur because when the blade is wound back around reel under the spring force of the coil spring, the free end of the blade tends to "whip" as it enters the opening 22, causing the last several inches of the blade 16 to hit against the housing assembly 12. This can cause cracking or breaking of the free end of the blade 16 over time. The protective film 158 prevents these cracks and tears and other damage to the blade 16 associated with blade whipping.

[0038] The free end of the blade 16 is frequently handled by the user and this handling can over time cause the numbering and markings on the concave side of the blade 16 to wear off or become difficult to read, even where the protective coating 17 is applied. When applied to the concave side of the blade, the film 158 prevents this damage because it covers the numbering and markings on the free end of the blade and thereby protects the same from being worn off. Film 158 provided on the concave side of the blade may also be subjected to less wear in comparison to film provided on the convex side.

[0039] There are several possibilities for the protective film 158 that remain within the scope of the present invention. For example, the film 158 may cover only a portion of the width of the blade 16. A range of between about 25% to about 100% may be sufficient to provide an increase in the blade life while reducing the amount of material necessary to provide the film. Most preferably, however, about 100% of the blade width is covered. In addition, the film, illustrated in FIG. 5c as film 165, may include a plurality of sub-layers 166. The sub-layers may be formed into the film prior to attachment to the blade 16, or may alternatively be individually attached to the blade in an iterative process. Also, the film 158, 165 may include at least one reinforcing member; such as, wherein the reinforcing member is a fiber 168 as in FIG. 5b.

[0040] In one embodiment, the film 158 and/or film 165 (or one or more sub-layer 166 thereof), in any of the embodiments above, may be provided with a fluorescent additive, so as to provide similar benefits (for portions of the blade with such film) noted above with respect to the coating 17, irrespective of whether the coating 17 is provided with the fluorescent additive. In yet another embodiment, a translucent (as defined herein) fluorescent coating layer is provided as a separate layer positioned between a non-fluorescent coating layer 17 and a non-fluorescent protective film 158 and/or 165. This separate layer may be formed from polyester in one embodiment, with the fluorescent additive.

[0041] In other embodiments, indicia are formed on top of the translucent fluorescent coating in any of the previously disclosed embodiments, rather than therebeneath. In another embodiment, the indicia is formed on top of an opaque, plastic coating layer formed on top of the metal blade.

[0042] In any of the embodiments herein, the fluorescent dye may provide a yellowish, greenish, orangeish or other colored tint.

[0043] In yet other embodiments, rather than using a fluorescent additive as described above, a light energy absorbing and releasing material (or "luminescent" or "phosphorescent material") is used. Such material is capable of subsequently releasing and emitting light energy to provide illumination to the measuring indicia in unlit environmental conditions. Unlike fluorescent materials, phosphorescent materials do not immediately discharge the radiation it absorbs. This type of light energy absorbing and releasing (or phosphorescent) material is commonly referred to as "glow-in-the-dark" material. Thus, in the embodiments described above, the layer 17 and/or layer 158 may include a "glow-in-the-dark" substance. In one configuration, the "glow-in-the-dark" layer 17 is substantially translucent (as defined herein) and illuminates the indicia printed therebeneath to enable the indicia to be viewed in unlit environmental conditions.

[0044] In another modification, the "glow-in-the-dark" material layer 17 is substantially opaque. In this modification, the indicia is a non-phosphorescent material (e.g., conventional measuring tape paint, or a fluorescent material such as fluorescent paint) printed on top of the layer 17, and the glow of the layer 17 will provide substantial contrast to the indicia printed thereon in unlit conditions.

Milwaukee Electric Tool Corporation
Ex-1015
Page 56 of 237

[0045] In this last configuration, a thin translucent or transparent layer or coating may be provided on top of the "glow-in-the-dark" material and the indicia. This thin clear or translucent layer may be similar to the layer 17 as described in U.S. Patent No. 6,804,899, or as described above, and protects the indicia from becoming worn or faded.

[0046] In yet another embodiment, a "glow-in-the-dark" (phosphorescent) material is used for the indicia (lines and/or numbers), and this is formed on a non-phosphorescent background material (e.g., a background of conventional paint, or fluorescent material). In this embodiment, the glow of the indicia will provide substantial contrast in relation to the background material on which the indicia is formed, particularly in unlit conditions.

[0047] In yet another embodiment, the "glow-in-the-dark" material comprises an opaque "glow-in-the-dark" plastic material that constitutes essentially the entire thickness of the blade 16, thus eliminating the need for a metal layer. The indicia in this embodiment is printed directly on the top surface of the plastic blade 16.

[0048] The "glow-in-the-dark" or phosphorescent material may be any suitable type of chemical compound emitting light, such as zinc sulfide or strontium aluminate, just for example.

[0049] The construction of the hook member 34 and the manner in which it is disposed on the free end 20 of the blade 16 is best seen in FIGS. 1-4. Preferably the end hook member 34 is formed of sheet metal and is mounted on the free end 20 of the blade 16.

[0050] One skilled in the art will understand that the embodiment of the tape rule assembly 10 shown in the figures and described above is exemplary only and not intended to be limiting. It is within the scope of the invention to provide any known tape rule assembly with any or all of the features of the present invention. For example, the clear film of plastic material with fluorescent dye can be applied to any known tape rule assembly, such a dual mode rule assembly as disclosed by U.S. Patent No. 6,643,948, hereby incorporated by reference in its entirety, or a "Lever Lock" type tape rule. It should be appreciated that the "blade holding assembly" as disclosed and claimed herein can be any type of blade holding assembly, including the dual mode type or "Lever Lock" type. Similarly, a lock member constructed according to the principles of the present invention can be applied to any known rule assembly.

[0051] It can also be appreciated that it is contemplated to use any of the aforementioned features singly or in any appropriate combination on a tape rule assembly that has a spring-powered retractable blade or, alternatively, on any tape rule assembly in which the blade is manually retracted.

[0052] It will thus be seen that the objects of the present invention have been fully and effectively accomplished. It will be realized, however, that the foregoing specific embodiments have been shown and described for the purposes of illustrating the functional and structural principles of the present invention and is subject to change without departure from such principles. Therefore, this invention includes all modifications encompassed within the spirit and scope of the following claims.

[0053] Embodiments of the present invention have been described with particular reference to the examples illustrated. However, it will be appreciated that variations and modifications may be made to the examples described within the scope of the present invention.

Claims

1. A retractable rule assembly, comprising:

   a housing assembly (12);
   a reel (14) rotatably mounted in said housing assembly;
   an elongated blade (16) formed of a ribbon of metal being wound on the reel (14), said elongated blade having a concavo-convex configuration when extended from said housing assembly, said elongated blade having measuring indicia (21) formed on the concave side thereof, and a translucent fluorescent material provided on said concave side of said blade and overlying the indicia;
   a coil spring (32) formed of a ribbon of metal constructed to rotate said reel in said housing assembly (12) in a direction to wind up the elongated blade (16) onto said reel; and
   a blade holding assembly (124) constructed to hold the blade in a position of extension outwardly of said housing assembly.

2. A retractable rule assembly according to claim 1, wherein said fluorescent material comprises a plastic material having a thickness dimension of between about .0002" to .010" (about 0.0005-0.025 cm).

3. A retractable rule assembly according to claim 1 or 2, wherein said indicia (21) is provided by a layer of paint between said blade and said fluorescent material, said layer of paint having a thickness of between .0001" to .0014" (about 0.000025-0.0036 cm).

4. A retractable rule assembly according to any of claims 1 to 3, wherein said fluorescent material comprises a material selected from the group consisting of: polyamides, polyvinyl, polyesters, silicone, polyimides, polyethylene, fluoropolymers, polyurethane and polyethylene terephthalate.

5. A retractable rule assembly according to any of claims 1 to 4, wherein said fluorescent material is also on said convex side of said blade.

Milwaukee Electric Tool Corporation
Ex-1015
Page 57 of 237

6. A retractable rule assembly according to any of claims 1 to 5, wherein said fluorescent material is provided on an entire length of said blade.

7. A retractable rule assembly according to any of claims 1 to 6, wherein said fluorescent material is provided on less than an entire length of said blade.

8. A retractable rule assembly according to any of claims 1 to 7, wherein said film extends across less than one hundred percent of the width of said blade.

9. A retractable tape rule assembly according to any of claims 1 to 8, wherein said translucent material is transparent.

10. A measuring device, comprising:

a base material;
measuring indicia (31) formed on the base material, said measuring indicia including lines and numbers; and
a translucent fluorescent material provided in overlying relation with respect to said indicia.

11. A measuring device according to claim 10, wherein said translucent material is transparent.

12. A retractable rule assembly, comprising:

a housing assembly (12);
a reel (14) rotatably mounted in said housing assembly;
an elongated blade (16) wound on said reel, said blade having measuring indicia (31) formed thereon, said blade comprising a light energy storage material that is capable of releasing light energy to provide visibility to said indicia in unlit conditions; and
a coil spring (32) arranged to rotate said reel in a direction to wind up the blade onto the reel (14).

13. A retractable rule assembly according to claim 12, wherein said light energy storage material is opaque and said indicia is formed over said opaque light energy storage material.

14. A retractable rule assembly according to claim 12 or 13, wherein said blade is formed from a plastic material comprising the light energy storage material.

15. A retractable rule assembly according to any of claims 12 to 14, wherein said blade is formed from a metal material, and said light energy storage material is formed over said metal material.

16. A retractable rule assembly according to claim 15, wherein said light energy storage material is opaque and said indicia is formed over said opaque light energy storage material.

17. A retractable rule assembly according to claim 15, wherein said light energy storage material is translucent or transparent.

18. A retractable rule assembly according to any of claims 12 to 17, wherein the indicia is between the metal material and the translucent or transparent light energy storage material.

19. A retractable rule assembly according to any of claims 12 to 17, wherein the indicia is formed over the translucent or transparent material.

20. A retractable rule assembly according to claim 16, further comprising a translucent or transparent material formed over the light energy storage material and the indicia so as to protect the indicia.

21. A retractable rule assembly according to any of claims 12 to 20, wherein the light energy storage material comprises a phosphorescent material.

22. A retractable rule assembly, comprising:

a housing assembly (12);
a reel (14) rotatably mounted in said housing assembly;
an elongated blade (16) formed of a ribbon of metal being wound on the reel, said elongated blade having a concavo-convex configuration when extended from said housing assembly, a fluorescent layer of material provided on said concave side of said blade, and indicia formed on said fluorescent layer of material;
a coil spring (32) formed of a ribbon of metal constructed to rotate said reel in said housing assembly in a direction to wind up the elongated blade onto said reel; and
a blade holding assembly (124) constructed to hold the blade in a position of extension outwardly of said housing assembly (12).

23. A retractable rule assembly according to claim 22, wherein the fluorescent layer of material is translucent.

24. A retractable rule assembly according to claim 22 or 23, further comprising a transparent layer disposed in overlying relationship with the indicia.

25. A retractable rule assembly according to any of claims 12 to 24, wherein the light energy storage material comprises a luminescent material.

26. A retractable rule assembly according to any of

Milwaukee Electric Tool Corporation
Ex-1015
Page 58 of 237

claims 12 to 25, wherein the light energy storage material is formed on a concave side of the blade.

27. A retractable rule assembly according to any of claims 12 to 26, wherein the light energy storage material is formed on a convex side of the blade.

28. A retractable rule assembly, comprising:

a housing assembly (12);
a reel (14) rotatable in the housing assembly; an elongated blade wound on the reel, the blade having measuring indicia (31) formed thereon, the measuring indicia comprising a light energy storage material capable of releasing light energy in unlit conditions; and a coil spring (32) arranged to rotate the reel (14) in a direction to wind up the blade onto the reel.

29. A retractable rule assembly according to claim 28, wherein the indicia comprises numbers.

30. A retractable rule assembly according to claim 28 or 29, wherein the indicia comprises lines.

31. A retractable rule assembly according to any of claims 28 to 30, wherein the indicia is formed on top of a non-light energy releasing material.

Milwaukee Electric Tool Corporation
Ex-1015
Page 59 of 237

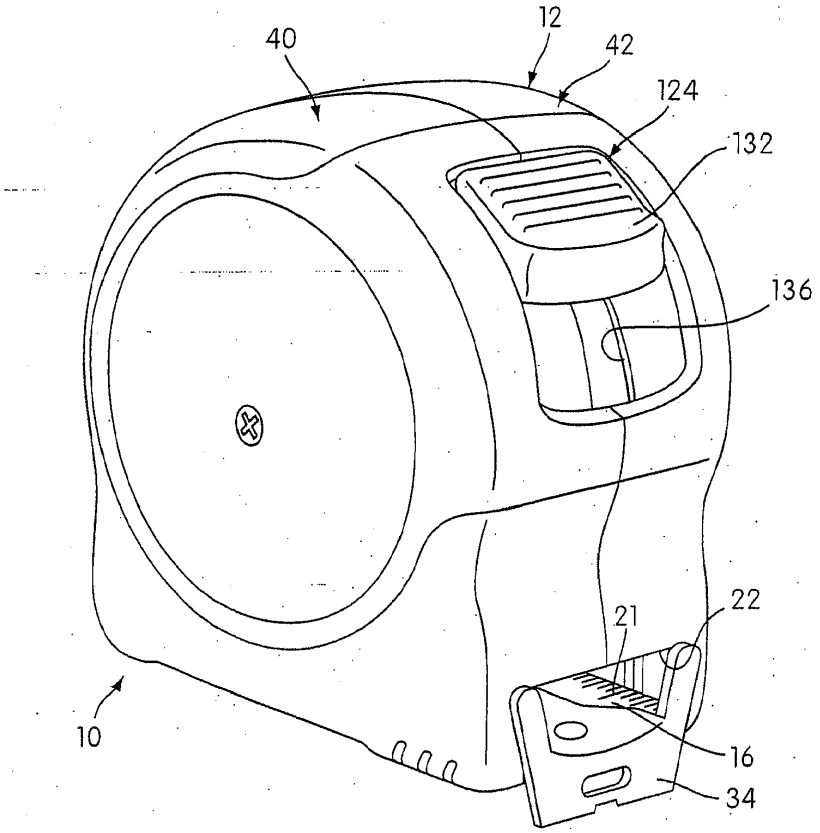

FIG. 1

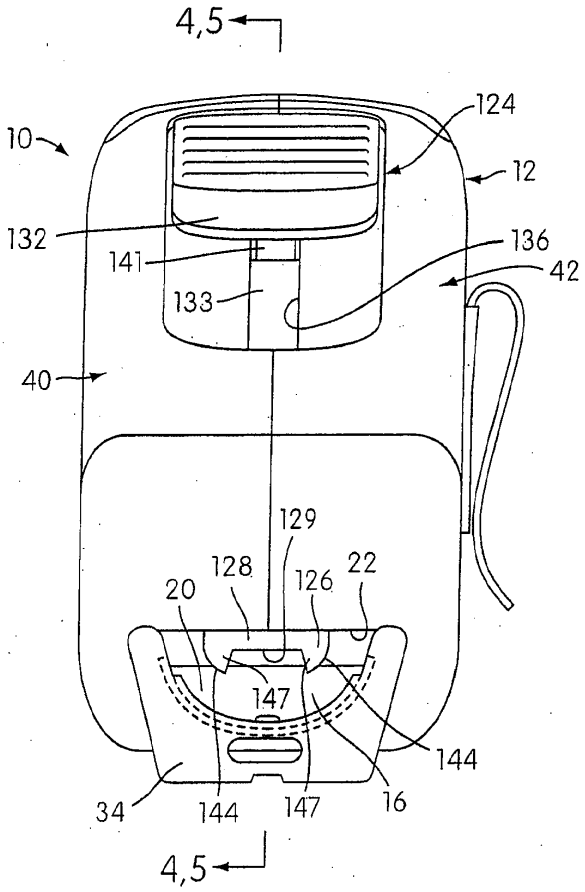

FIG. 2

Milwaukee Electric Tool Corporation
Ex-1015
Page 61 of 237

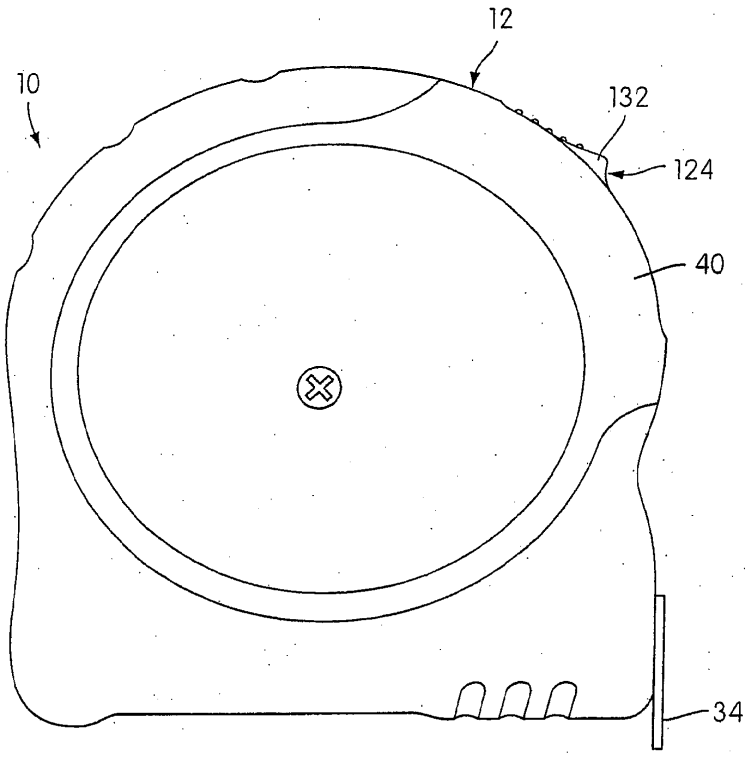

FIG. 3

Milwaukee Electric Tool Corporation
Ex-1015
Page 62 of 237

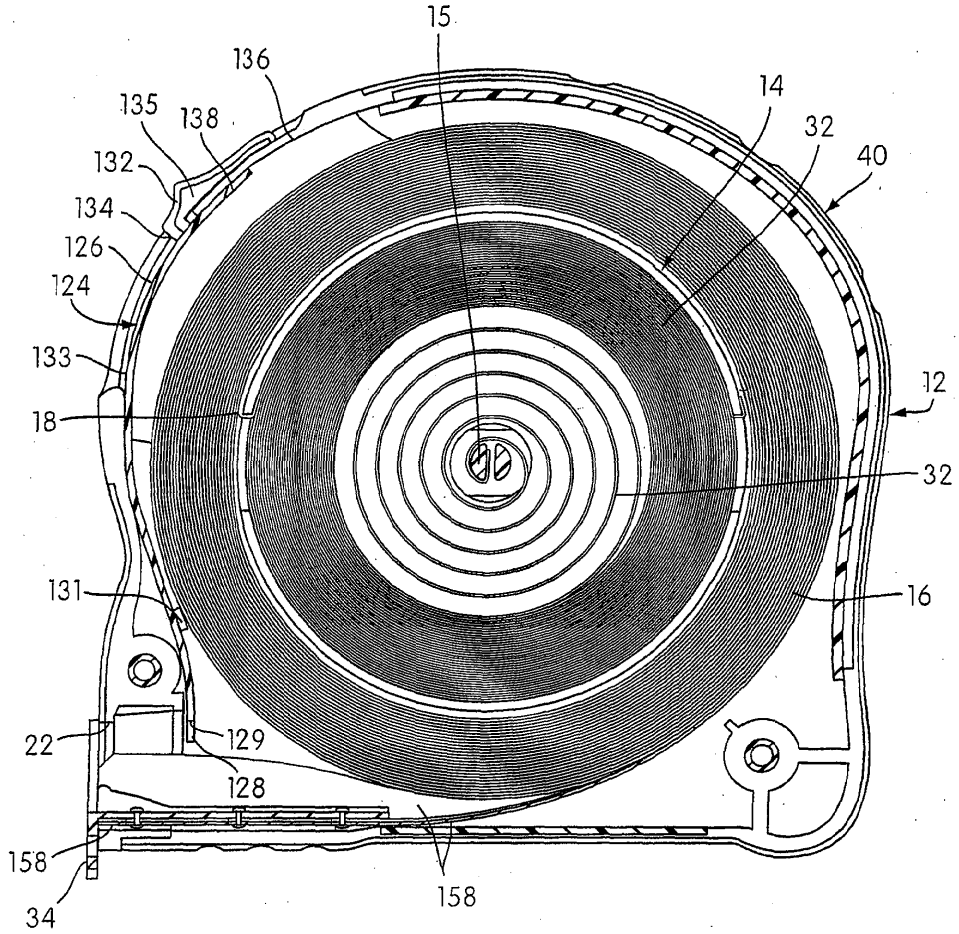

FIG. 4

Milwaukee Electric Tool Corporation
Ex-1015
Page 63 of 237

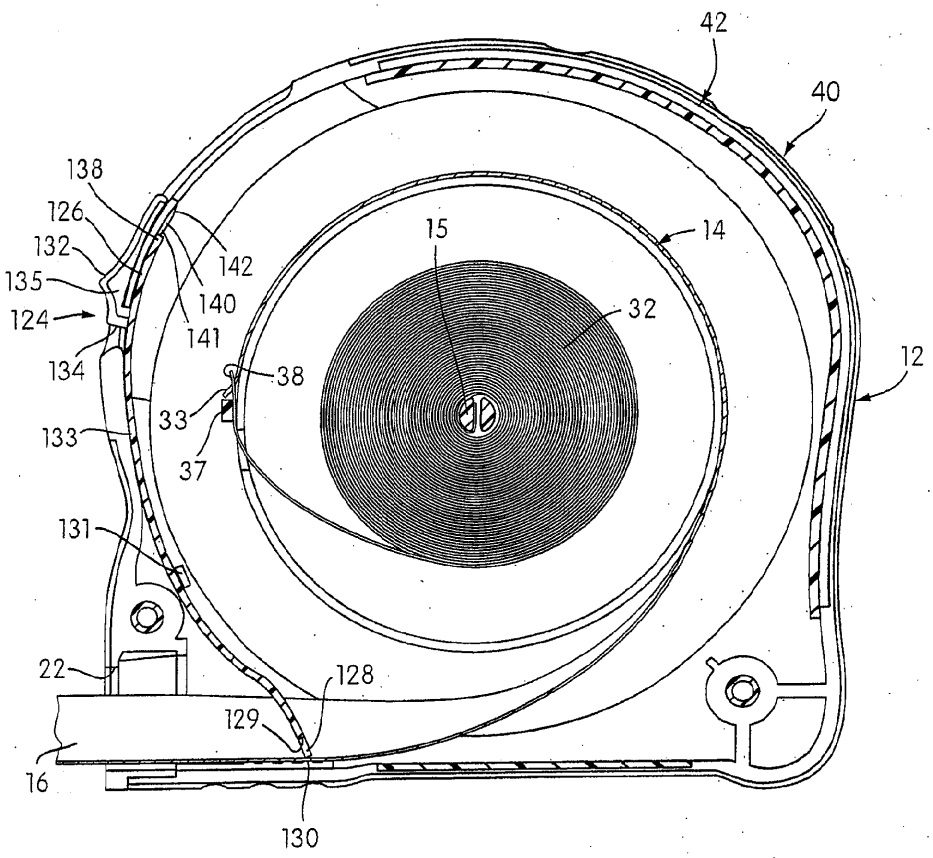

FIG. 5

Milwaukee Electric Tool Corporation
Ex-1015
Page 64 of 237

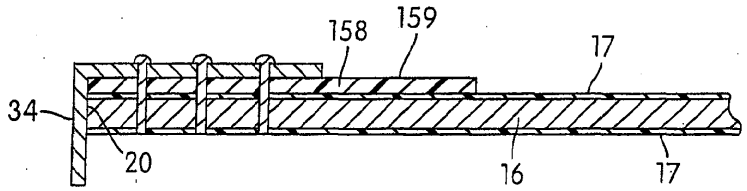

FIG. 5a

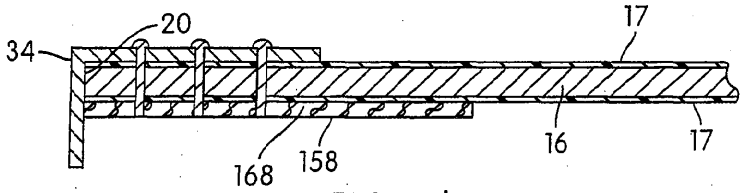

FIG. 5b

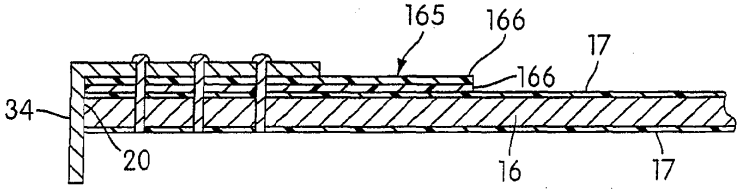

FIG. 5c

Milwaukee Electric Tool Corporation
Ex-1015
Page 65 of 237

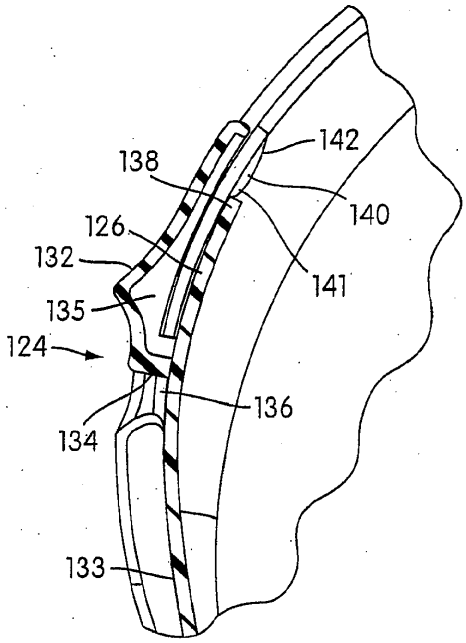

FIG. 6

Milwaukee Electric Tool Corporation
Ex-1015
Page 66 of 237

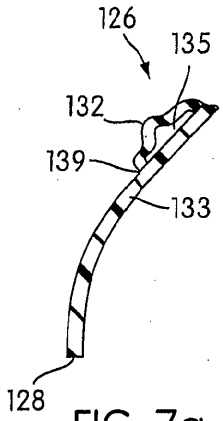

FIG. 7a

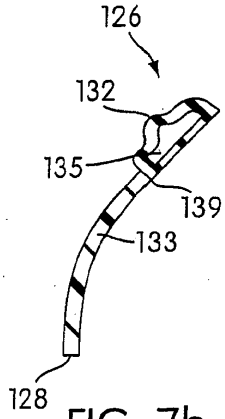

FIG. 7b

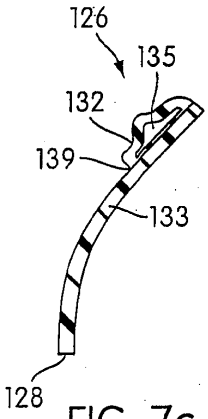

FIG. 7c

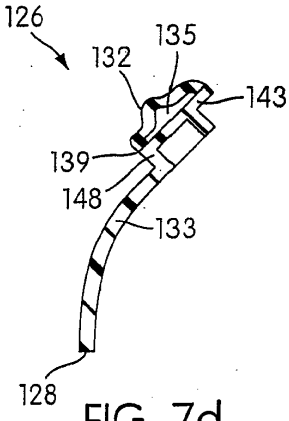

FIG. 7d

Milwaukee Electric Tool Corporation
Ex-1015
Page 67 of 237

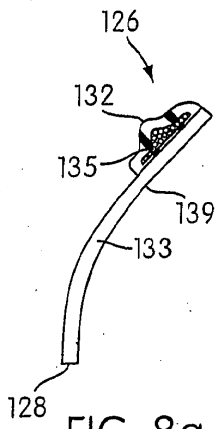

FIG. 8a

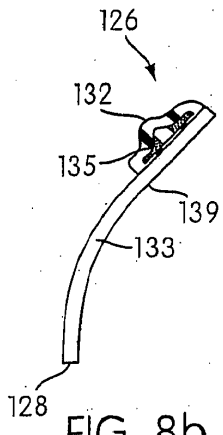

FIG. 8b

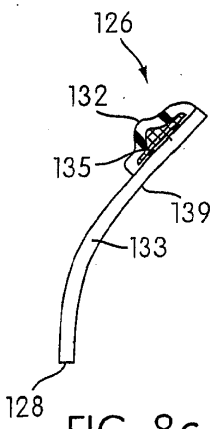

FIG. 8c

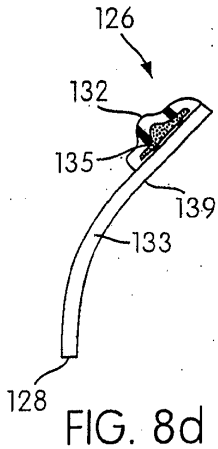

FIG. 8d

Milwaukee Electric Tool Corporation
Ex-1015
Page 68 of 237

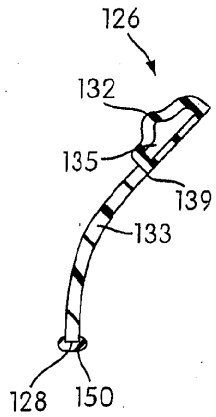

FIG. 9a

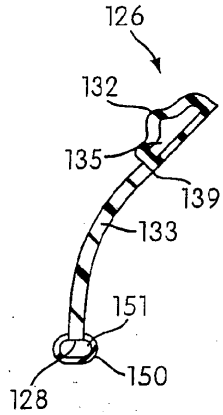

FIG. 9b

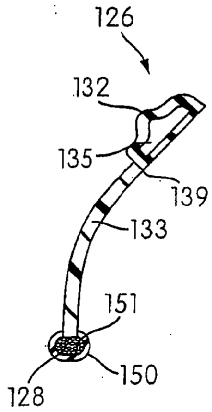

FIG. 9c

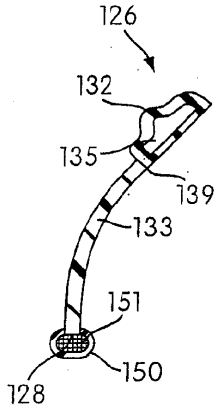

FIG. 9d

Milwaukee Electric Tool Corporation
Ex-1015
Page 69 of 237

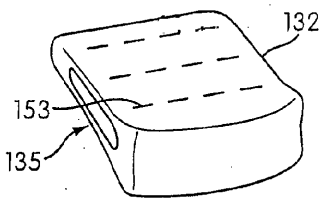

FIG. 10a

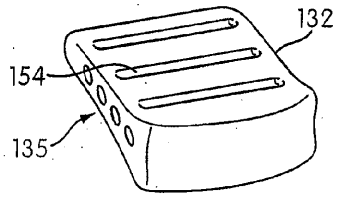

FIG. 10b

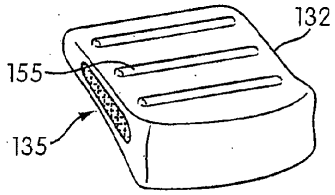

FIG. 10c

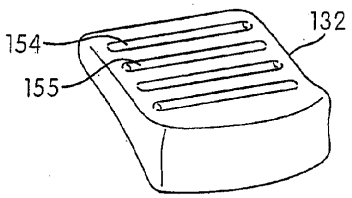

FIG. 10d

Milwaukee Electric Tool Corporation
Ex-1015
Page 70 of 237

REFERENCES CITED IN THE DESCRIPTION

This list of references cited by the applicant is for the reader's convenience only. It does not form part of the European patent document. Even though great care has been taken in compiling the references, errors or omissions cannot be excluded and the EPO disclaims all liability in this regard.

Patent documents cited in the description

- US 6804899 B **[0003] [0023] [0045]**
- US 3121957 A **[0018]**
- US 6643948 B **[0050]**

Espacenet

Bibliographic data: JP2001174202 (A) — 2001-06-29

MEASURING TAPE

Inventor(s): HARA TAKESHI ± (HARA TAKESHI)

Applicant(s): HARA RULE MFG ± (HARA DOKI KK)

Classification: **- international:** ***G01B3/10;*** (IPC1-7): G01B3/10
- cooperative: G01B3/1003 (EP); G01B3/1041 (EP)

Application number: JP19990357978 19991216

Priority number(s): JP19990357978 19991216

Also published as: JP4435349 (B2)

Abstract of JP2001174202 (A)

PROBLEM TO BE SOLVED: To provide a measuring tape which enables easy reading of scale at night and in darkness, and has improved maintainability. SOLUTION: A surface 8 of a tape 7 or a scale 9 printed on the surface is coated with a phosphorescent coating material. A part or the whole part of a tape reeling drum 5 for reeling up the tape 7 is made transparent. A part or the whole part of a case (right-half case 2/left-half case 3) is made transparent, and the measuring tape is constituted.

Milwaukee Electric Tool Corporation
Ex-1015
Page 72 of 237

(19)日本国特許庁（ＪＰ）　(12) 公開特許公報（Ａ）　(11)特許出願公開番号
特開2001－174202
（P2001－174202A）
(43)公開日　平成13年6月29日(2001.6.29)

(51)Int.Cl.⁷	識別記号	ＦＩ	テーマコード(参考)
Ｇ０１Ｂ　3/10	１０１	Ｇ０１Ｂ　3/10　１０１	Ａ　２Ｆ０１１

審査請求　未請求　請求項の数８　ＯＬ　（全 ４ 頁）

(21)出願番号　特願平11－357978
(22)出願日　平成11年12月16日(1999.12.16)

(71)出願人　000165882
原度器株式会社
神奈川県小田原市酒匂２丁目38番30号
(72)発明者　原　毅
神奈川県小田原市酒匂２－38－30原度器株式会社内
(74)代理人　100071238
弁理士　加藤　恒久

Ｆターム(参考)　2F011 AA02 AB02 AC02 AD02

(54)【発明の名称】　巻　尺

(57)【要約】
【目的】夜間や暗がりでもメモリを容易に読み取ることができ且つメンテナンス性を向上させた巻尺を提供することを目的とする。
【構成】テープ７の表面８またはその上に印刷されるメモリ９を蓄光可能な塗料で塗装し、そのテープ７を巻取るテープ巻取りドラム５の一部または全部を透明として、更にそれらを収容するケース（右ハーフケース２／左ハーフケース３）の一部または全部を透明にして巻尺を構成する。

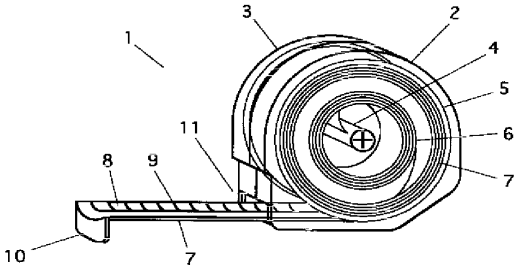

【特許請求の範囲】

【請求項１】ケース内に、テープの巻取りバネを内装するテープ巻取りドラムが回動自在に軸装された巻尺において、テープの表面またはその上に印刷されるメモリが蓄光可能な塗料で塗装され、そのテープを巻取るテープ巻取りドラムの一部または全部が透明であり、更にそれらを収容するケースの一部または全部が透明であることを特徴とする巻尺

【請求項２】テープの表面およびその上に印刷されるメモリの両方が蓄光可能な塗料で塗装されていることを特徴とする請求項１の巻尺

【請求項３】テープ巻取りドラムの巻胴の両端に有する鍔の一方または両方が透明であることを特徴とする請求項１の巻尺

【請求項４】テープ巻取りドラムの鍔を有する蓋体の一部または全部が透明であることを特徴とする請求項１の巻尺

【請求項５】ケースが左右のハーフケースから構成されてなり、そのハーフケースの一方または両方が透明であることを特徴とする請求項１の巻尺

【請求項６】ケースが、少なくとも前壁と後壁と底壁を有する周回壁とその周回壁の左右周縁に係合する左右の側壁から構成されてなり、その３ピースケースの左右またはその一方の側壁が透明であることを特徴とする請求項１の巻尺

【請求項７】固定的にあるいは格納可能にして、ケースのテープ出入口の近傍にテープのメモリ側の面を照光する照明装置を設けたことを特徴とする請求項１の巻尺

【請求項８】明暗を感知するセンサーにより照明装置のスイッチが自動的にオンオフすることを特徴とする請求項７の巻尺

【発明の詳細な説明】

【０００１】

【産業上の利用分野】本発明は、暗い場所でも使用することができる巻尺に関するものである。

【０００２】

【従来技術と問題点】従来、巻尺の使用に際して一般的には昼間が多く、よって測定用のテープに印刷されているメモリも昼間は容易に読み取ることができる。しかし、夜間や暗がりで巻尺を使用することもあり、その場合は照明器具によって作業現場全体を照光するなどして使用しているのであるが、測定場所が狭く照明器具からの光が届かない場所であったり、照明器具が無かったりまた用意していなかった時には暗い状態で作業をしなければならず、メモリの読み取は困難を極め測定寸法を読み間違えてしまうこともしばしばあった。

【０００３】このことからも、暗闇での使用を想定して常に照明器具や懐中電灯を持ち歩けばよいのだが、多くの人はそれらを工具箱に収納してはいるものの、作業中常に巻尺と共にそれらを持ち歩くことは皆無に等しいのである。そして、その測定作業場所が照明器具や懐中電灯を収納している工具箱から離れている場所であった時は、照明器具や懐中電灯を取りに行くのが面倒なことから、暗い状態のままで寸法測定をしてしまうことが多いのである。

【０００４】また、作業者は測定場所の明暗に関係なくメモリの判読が不可能となるまではその明るさで測定作業を行ってしまうことが多いため、測定寸法の読み間違えに関係するミスは一向に減ることがなかった。このことから、電池を電源とした照明装置を備える巻尺が考案されたが、これは電池の消耗により使用できなくなったり、また、電球が切れてしまえば電池が残っていても使用できなくなってしまうものであるため、作業者からはメンテナンス性が良く昼夜共にメモリを判読できる巻尺の開発を望んでいた。

【０００５】

【目的】本発明は上述した問題点に鑑みてなされたもので、夜間や暗がりでもメモリを容易に読み取ることができ且つメンテナンス性を向上させた巻尺を提供することを目的とするものである。

【０００６】

【問題を解決するための手段】本発明の要旨とするところは、ケース内に、テープの巻取りバネを内装するテープ巻取りドラムが回動自在に軸装された巻尺において、テープの表面またはその上に印刷されるメモリが蓄光可能な塗料で塗装され、そのテープを巻取るテープ巻取りドラムの一部または全部が透明であり、更にそれらを収容するケースの一部または全部が透明であることを特徴とする巻尺である。

【０００７】この巻尺をさらに詳しく説明すると、ケースの内側壁の軸にテープの巻取りバネを内装するテープ巻取りドラムが回動自在に軸装されており、このテープ巻取りドラムの巻胴にメモリが印刷されたテープが巻回される。このテープの表面すなわちメモリを印刷する部分、または、テープの表面に印刷されるメモリ、あるいはその両方が蓄光可能な塗料で塗装されているものである。蓄光可能な塗料は一般に市販されているものを用いればよい。

【０００８】テープの表面も、その全部または一部を蓄光可能な塗料で塗装して、その塗装面積や塗装形状（デザイン）等も特に限定するものではなく適宜所望の塗装をすればよい。また、塗装色においても特に限定するものではなく、昼夜を問わず容易に判読することができる色であれば何でもよい。

【０００９】このテープを巻回するテープ巻取りドラムは、その一部または全部を透明にして巻回するテープの側面に光が到達できるように構成しなければならないが、その形態は特に限定するものではない。このとき、巻尺のケース自体もその一部または全部を透明にして、光がテープ巻取りドラムに到達するようにしなければな

らない。

【0010】テープ巻取りドラムの一部または全部を透明にするにあたり、その形態や方法は特に限定するものではないが、一部を透明にする場合の具体例としては、テープ巻取りドラムの巻胴の両端に有する鍔の一方または両方を透明にする。また、テープ巻取りドラムの鍔を有するテープ巻取りドラムの蓋体の一部または全部を透明にしてもよい。

【0011】巻尺のケースの一部または全部を透明にするにあたり、その形態や方法は特に限定するものではないが、具体的には、ケースが左右のハーフケースから構成されるものは、そのハーフケースの一方または両方を透明にすればよい。また、ケースが少なくとも前壁と後壁と底壁を有する周回壁とその周回壁の左右周縁に係合する左右の側壁から構成されるものは、その3ピースケースの左右またはその一方の側壁を透明にすればよい。

【0012】さらには、この巻尺のケースのテープ出入口上部の前壁に、固定的にあるいは格納可能にして、テープのメモリ側の面を照光する照明装置を設けてもよい。照明装置も特に限定するものではなく何でもよいが、発光体にはＬＥＤを用いるのがよく、また、電源はボタン電池を用いるのが望ましい。照明装置のスイッチも手動または自動どちらでもよいが、周囲の明暗を感知するセンサーを設けて、照明装置が使用される場合にスイッチが自動的にオンオフするようにしてもよい。

【0013】

【作用】本発明の巻尺は以上のような構造であることから、昼間に於いては巻尺を携帯することにより、太陽光が巻尺の透明ケースを透過してケース内部に入ると共に、透明部材により形成されたテープ巻取りドラムまた蓋体の鍔を透過して、蓄光塗料により印刷されたテープの側面に光が到達する。これにより、太陽光がテープの側面から蓄光塗料に蓄えられる。

【0014】そして、夜間や暗い所で巻尺が使用される時は、ケースより引き出されたテープの表面またはメモリから蓄えられている光が発せられて、テープの表面またはメモリ表示がネオンサインの如く発光する。また、照明装置を備えるものは、蓄光塗料に蓄えられた光量が少ないとき蓄光塗料の発光を補助することができる。

【0015】

【実施例】本発明の巻尺を以下図面に従って説明すると、図1は、本発明に係わる巻尺の斜視図であり、1はその巻尺、2は右ハーフケース、3は左ハーフケースで、一方のハーフケースの内壁に軸4が立設している。5は巻胴54にテープ7を巻回するテープ巻取りドラムで、その内部にはテープ7を巻取るテープ巻取りバネ6が内装されている。テープ7はその表面8にメモリ9が印刷されており、また先端にフック10が設けられている。11はテープ出入口である。

【0016】そして、そのテープ7の表面8またはメモリ9、あるいは表面8とメモリ9が蓄光可能な塗料で印刷されている。蓄光可能な塗料とは一般的には蓄光塗料と呼ばれているものである。また、テープ巻取りドラム5と右ハーフケース2および左ハーフケース3が透明素材から形成されており、これにより太陽光等の外光がケース内部に収納されているテープ7の側面に届くようになっている。

【0017】図2は、テープの平面図であり、そのテープ7の表面8またはメモリ9、あるいは表面8とメモリ9が蓄光可能な塗料で印刷されているのである。

【0018】図3は、テープ巻取りドラムの正面図であり、（ａ）は、巻胴の両端に鍔を備えるテープ巻取りドラムで、テープ巻取りドラム5は軸4に支持される。51はテープ7を巻回する巻胴54の両端に設けられている鍔、52はテープ巻取りバネ6の収納部の蓋である。（ｂ）は、蓋体に鍔を備えるテープ巻取りドラムで、テープ巻取りバネ6の収納部の蓋の径をテープ巻取りドラム5の径とほぼ同じにして、巻胴54の鍔を兼用するものである。53が鍔である。

【0019】図4は、巻尺ケースの構成図であり、（ａ）は、左右のハーフケースから構成された巻尺ケースで、一般には本形態のケースが主流である。2は右ハーフケース、3は左ハーフケースであり、11はテープ出入口となる開口である。（ｂ）は、3ピース構成の巻尺ケースで、前壁121と底壁122と図では示していないが前壁121の後ろに位置する後壁を有する周回壁12と、左右の周縁部に係合する右側壁13および左側壁14とから形成されている。11はテープ出入口となる開口である。図で示したものは一例であり、例えば、右側壁13および左側壁14が板状に近いものであってもよい。すなわち、3ピースの部品から構成されるケースを指すものである。

【0020】図5は、照明装置を設けた巻尺の側面図であり、15は支持軸18により格納可能に構成された照明装置で、発光体にＬＥＤ16が用いられており明暗センサー17により暗い場所での作業時に自動的にＬＥＤ16が発光する。また、図には示していないがＬＥＤ16の電源としてボタン電池が用いられている。（ａ）は、照明装置を格納した状態で、（ｂ）は、照明装置を出した状態を示すものである。

【0021】

【効果】本発明の巻尺は、テープの表面またはメモリが蓄光塗料で印刷されているので、昼間の太陽光線等の光をその蓄光塗料に蓄えることができ、巻尺が夜間また暗い所で使用される時にはその蓄えた光が発光するため、テープ表面のメモリを判読することができる。すなわちテープの表面またはメモリが発光するため、測定に際しテープの最小メモリをも容易に読み取ることができる。

【0022】また、照明装置を備えるものは、蓄光塗料に蓄えた光量が少ないとき蓄光塗料の発光を補助するこ

とができる。そして、照明装置の発光体もＬＥＤであるため、使用の際の衝撃にも強く且つ消費電力も小さいため電池の消耗も少なく、よってメンテナンス性を向上させることができる。

【図面の簡単な説明】

【図１】　本発明に係わる巻尺の斜視図

【図２】　テープの平面図

【図３】　テープ巻取りドラムの正面図

（ａ）巻胴の両端に鍔を備えるテープ巻取りドラム

（ｂ）蓋体に鍔を備えるテープ巻取りドラム

【図４】　巻尺ケースの構成図

（ａ）左右のハーフケースから構成された巻尺ケース

（ｂ）３ピース構成の巻尺ケース

【図５】　照明装置を設けた巻尺の側面図

（ａ）照明装置を格納した状態

（ｂ）照明装置を出した状態

【符号の説明】

１－巻尺，１ａ－巻尺，２－右ハーフケース，３－左ハーフケース，３ａ－左ハーフケース，４－軸，５－テープ巻取りドラム，５１－鍔，５２－蓋，５３－鍔，５４－巻胴，６－テープ巻取りバネ，７－テープ，８－表面，９－メモリ，１０－フック，１１－テープ出入口，１２－周回壁，１２１－前壁，１２２－底壁，１３－右側壁，１４－左側壁，１５－照明装置，１６－ＬＥＤ，１７－明暗センサー，１８－支持軸

【図１】

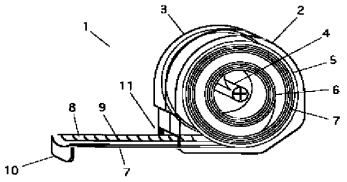

【図２】

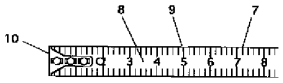

【図３】

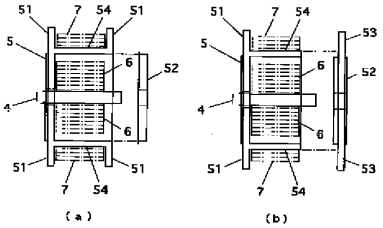

【図４】

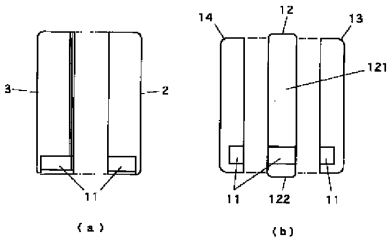

【図５】

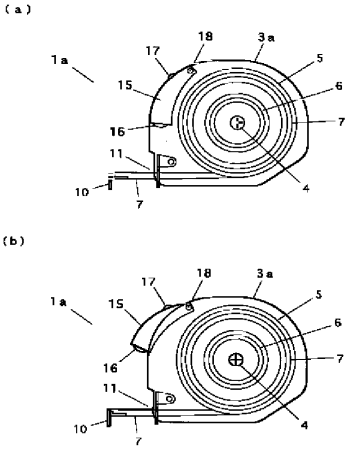

Electronic Acknowledgement Receipt

EFS ID:	42622949
Application Number:	16696383
International Application Number:	
Confirmation Number:	6816
Title of Invention:	GLOW FISH TAPE SYSTEM
First Named Inventor/Applicant Name:	Daniel R. Pearson
Customer Number:	161268
Filer:	Elias Panos Soupos/Robert Holland
Filer Authorized By:	Elias Panos Soupos
Attorney Docket Number:	751391
Receipt Date:	03-MAY-2021
Filing Date:	26-NOV-2019
Time Stamp:	16:56:01
Application Type:	Utility under 35 USC 111(a)

Payment information:

Submitted with Payment	no

File Listing:

Document Number	Document Description	File Name	File Size(Bytes)/ Message Digest	Multi Part /.zip	Pages (if appl.)
1	Transmittal Letter	IDS-1st.pdf	187927 40206eaab0583cdc19a92c6a5d391a4ec102315e	no	4

Warnings:

Information:					
2	Information Disclosure Statement (IDS) Form (SB08)	1449-1st.pdf	65669 7e32ccf1eaf053f29234ebc18751d21484589f3e	no	1
Warnings:					
Information:					
This is not an USPTO supplied IDS fillable form					
3	Foreign Reference	EP_1914508-A2.pdf	1088492 72422f21d617d1c5585a9f3053a88f6b5be67647	no	22
Warnings:					
Information:					
4	Foreign Reference	JP_2001-174202-A.pdf	330814 374ea39764ba445d6fc5c933d928ed412c58d026	no	5
Warnings:					
Information:					
5	Other Reference-Patent/App/Search documents	SR_in_GB2018458-6.pdf	3246324 73c4afd3dd8dd1113d7833cf89c7da8d0fb58e3e	no	4
Warnings:					
Information:					
			Total Files Size (in bytes):	4919226	

This Acknowledgement Receipt evidences receipt on the noted date by the USPTO of the indicated documents, characterized by the applicant, and including page counts, where applicable. It serves as evidence of receipt similar to a Post Card, as described in MPEP 503.

<u>New Applications Under 35 U.S.C. 111</u>
If a new application is being filed and the application includes the necessary components for a filing date (see 37 CFR 1.53(b)-(d) and MPEP 506), a Filing Receipt (37 CFR 1.54) will be issued in due course and the date shown on this Acknowledgement Receipt will establish the filing date of the application.
<u>National Stage of an International Application under 35 U.S.C. 371</u>
If a timely submission to enter the national stage of an international application is compliant with the conditions of 35 U.S.C. 371 and other applicable requirements a Form PCT/DO/EO/903 indicating acceptance of the application as a national stage submission under 35 U.S.C. 371 will be issued in addition to the Filing Receipt, in due course.
<u>New International Application Filed with the USPTO as a Receiving Office</u>
If a new international application is being filed and the international application includes the necessary components for an international filing date (see PCT Article 11 and MPEP 1810), a Notification of the International Application Number and of the International Filing Date (Form PCT/RO/105) will be issued in due course, subject to prescriptions concerning national security, and the date shown on this Acknowledgement Receipt will establish the international filing date of the application.

IN THE UNITED STATES PATENT AND TRADEMARK OFFICE

Patent Application No. 16/696,383

Confirmation No. 6816

Attorney Docket No. 751391

INFORMATION DISCLOSURE STATEMENT

Pursuant to 37 CFR 1.97 and 1.98, the documents listed on the accompanying Form PTO-1449, Substitute Form PTO-1449, and/or USPTO Form SB/08 (hereinafter, individually or collectively referred to as "Form") are submitted for consideration by the Examiner in the examination of the above-identified patent application.

The full consideration of the documents in their entirety by the Examiner is respectfully requested and encouraged. Also, it is respectfully requested that the documents be entered into the record of the present application and that the Examiner initial the appropriate area on the accompanying Form, thereby indicating the Examiner's consideration of each of the documents.

The submission of the documents listed on the Form is for the purpose of providing a complete record and is not a concession that the documents listed thereon are prior art to the invention claimed in the patent application. The right is expressly reserved to establish an invention date earlier than the above-identified filing date in order to remove any document submitted herewith as prior art should it be deemed appropriate to do so.

Further, the submission of the documents is not to be taken as a concession that any reference represents art that is relevant or analogous to the claimed invention. Accordingly, the right to argue that any document is not properly within the scope of prior art relevant to an examination of the claims in the above-identified application is also expressly reserved.

The Information Disclosure Statement is being filed:

☒ **within** any one of the following time periods: (a) within three months of the filing date of a national application other than a continued prosecution application under 37 CFR 1.53(d); (b) within three months of the date of entry of the national stage as set forth in 37 CFR 1.491 of an international application; (c) before the mailing date of a first Office Action on the merits; or (d) before the mailing of a first Office Action after the filing of a request for continued examination under 37 CFR 1.114.

☐ Note: This submission includes the Statement under 37 CFR 1.704(d) (see "Statement under 37 CFR 1.704(d)" below), such that no reduction in patent term adjustment is warranted by the filing of this Information Disclosure Statement.

☐ **after** (a), (b), (c) or (d) above, but before the mailing date of a final action under 37 CFR 1.113, a Notice of Allowance under 37 CFR 1.311, or an action that otherwise closes prosecution in the application, and includes *one* of:

Milwaukee Electric Tool Corporation
Ex-1015
Page 79 of 237

☐ the Statement under 37 CFR 1.97(e) (see "Statement under 37 CFR 1.97(e)" below).

☐ Note: This submission includes the Statement under 37 CFR 1.704(d) (see "Statement under 37 CFR 1.704(d)" below), such that no reduction in patent term adjustment is warranted by the filing of this Information Disclosure Statement.

– *or* –

☐ the fee set forth in 37 CFR 1.17(p) (see "Fees" below).

☐ **on or after** the mailing date of a final action under 37 CFR 1.113 or a Notice of Allowance under 37 CFR 1.311, or an action that otherwise closes prosecution in the application, and on or before payment of the issue fee, and includes the Statement under 37 CFR 1.97(e) (see "Statement under 37 CFR 1.97(e)" below), and the fee set forth in 37 CFR 1.17(p) (see "Fees" below).

☐ Note: This submission includes the Statement under 37 CFR 1.704(d) (see "Statement under 37 CFR 1.704(d)" below), such that no reduction in patent term adjustment is warranted by the filing of this Information Disclosure Statement.

Statement under 37 CFR 1.97(e)

☐ The **undersigned** hereby states that each item of information contained in the Information Disclosure Statement was first cited in any communication from a foreign patent office in a counterpart foreign patent application not more than three months prior to the filing of the Information Disclosure Statement.

☐ The **undersigned** hereby states that no item of information contained in the Information Disclosure Statement was cited in a communication from a foreign patent office in a counterpart foreign patent application, and, to the knowledge of the undersigned after making reasonable inquiry, no item of information contained in the Information Disclosure Statement was known to any individual designated in 37 CFR 1.56(c) more than three months prior to the filing of the Information Disclosure Statement.

Statement under 37 CFR 1.704(d)

☐ The **undersigned** hereby states that each item of information contained in the Information Disclosure Statement was first cited in any communication from a patent office in a counterpart foreign or international application or from the Office and that this communication was not received by any individual designated in 37 CFR 1.56(c) more than thirty days prior to the filing of the Information Disclosure Statement.

Citation to Other Patent Applications

☐ The following U.S. patent applications are hereby brought to the attention of the Examiner. The U.S. patent applications claim subject matter that may be considered by the Examiner to be similar to the subject matter claimed in the above-identified patent application. Accordingly, these U.S. patent applications and/or the prosecution pertaining thereto may include information considered to be material to the prosecution of the above-identified patent application. Since the Examiner has electronic access to the prosecution histories of these U.S. patent applications, copies of prosecution materials therefrom are not provided herewith, but will be promptly provided if the Examiner so desires and requests same.

U.S. APPLICATIONS		STATUS *(check one)*		
U.S. APPLICATIONS	U.S. FILING DATE	Patented	Pending	Never Issued: Abandoned/Expired
1.				
2.				
3.				

Copies of the Documents

☒ Copies of any U.S. patents and published patent applications that are listed on the accompanying Form are not enclosed herewith. Copies of any other documents identified on the accompanying Form are enclosed herewith.

☒ For each document not in the English language, at least one of the following is provided: (a) an English translation in whole or in part or (b) a concise statement of relevance in the form of, for example, an English language counterpart, an English-language abstract, or an English-language version of the search report or action by a foreign patent office in a counterpart foreign application indicating the degree of relevance found by the foreign office.

☐ The documents listed on the accompanying Form were previously identified in the parent application(s) of the present application, and copies of the documents were furnished at that time. Accordingly, additional copies of the documents are not submitted herewith, so as not to burden the file with duplicate copies of documents. The Examiner is respectfully requested to carefully review the documents in accordance with the requirements set out in the Manual of Patent Examining Procedure. In accordance with 37 CFR 1.98(d), the details of the parent application(s) relied upon for an earlier filing date under 35 USC 120 in which copies of the documents were previously furnished are set out below:

U.S. APPLICATIONS		STATUS *(check one)*		
U.S. APPLICATIONS	U.S. FILING OR 371(c) DATE	Patented	Pending	Abandoned
1.				
2.				
3.				

Fee Calculation

☒ **No fee** is owed by the applicant(s).

☐ IDS Fee (37 CFR 1.17(p)) $260.00

☐ Applicant(s) assert(s) small entity status. Therefore, the fee shown above is reduced by 50%, and the resulting fee is shown below.

☐ Applicant(s) certifies/certify micro entity status. Therefore, the fee shown above is reduced by 75%, and the resulting fee is shown below. Note: Form PTO/SB15A or B must either be enclosed or have been submitted previously

☒ **Total Fee Due** **$0.00**

Fee Payment

☐ Charge the indicated **Total Fee Due** to Deposit Account No. 12-1216.

☒ Charge any additional fees owed in connection with this communication to Deposit Account No. 12-1216.

☒ Credit any refund to Account No. 12-1216.

Leydig

/Elias P. Soupos/
Elias P. Soupos, Reg. No. 57,375
Telephone: 312-616-5600
Facsimile: 312-616-5700

Date: May 3, 2021

MAILING/TRANSMISSION CERTIFICATE UNDER 37 CFR 1.8			
I hereby certify that this correspondence is being facsimile transmitted to the USPTO, EFS-Web transmitted to the USPTO, or deposited with the United States Postal Service with sufficient postage in an envelope addressed to "Commissioner for Patents, P.O. Box 1450, Alexandria, VA 22313-1450" [37 CFR 1.8(a)] on the date indicated below.			
Name (Print/Type)	Robert Holland		
Signature	/Robert Holland/	*Date*	May 3, 2021

UNITED STATES PATENT AND TRADEMARK OFFICE

UNITED STATES DEPARTMENT OF COMMERCE
United States Patent and Trademark Office
Address: COMMISSIONER FOR PATENTS
P.O. Box 1450
Alexandria, Virginia 22313-1450
www.uspto.gov

APPLICATION NUMBER	FILING OR 371(C) DATE	FIRST NAMED APPLICANT	ATTY. DOCKET NO./TITLE
16/696,383	11/26/2019	Daniel R. Pearson	751391

CONFIRMATION NO. 6816

PUBLICATION NOTICE

OC000000125913504

161268
LEYDIG VOIT & MAYER, LTD (Klein Tools)
TWO PRUDENTIAL PLAZA, SUITE 4900
180 NORTH STETSON AVENUE
CHICAGO, IL 60601-6731

Title:GLOW FISH TAPE SYSTEM

Publication No.US-2021-0155445-A1
Publication Date:05/27/2021

NOTICE OF PUBLICATION OF APPLICATION

The above-identified application will be electronically published as a patent application publication pursuant to 37 CFR 1.211, et seq. The patent application publication number and publication date are set forth above.

The publication may be accessed through the USPTO's publically available Searchable Databases via the Internet at www.uspto.gov. The direct link to access the publication is currently http://www.uspto.gov/patft/.

The publication process established by the Office does not provide for mailing a copy of the publication to applicant. A copy of the publication may be obtained from the Office upon payment of the appropriate fee set forth in 37 CFR 1.19(a)(1). Orders for copies of patent application publications are handled by the USPTO's Public Records Division. The Public Records Division can be reached by telephone at (571) 272-3150 or (800) 972-6382, by facsimile at (571) 273-3250, by mail addressed to the United States Patent and Trademark Office, Public Records Division, Alexandria, VA 22313-1450 or via the Internet.

In addition, information on the status of the application, including the mailing date of Office actions and the dates of receipt of correspondence filed in the Office, may also be accessed via the Internet through the Patent Electronic Business Center at www.uspto.gov using the public side of the Patent Application Information and Retrieval (PAIR) system. The direct link to access this status information is currently https://portal.uspto.gov/pair/PublicPair. Prior to publication, such status information is confidential and may only be obtained by applicant using the private side of PAIR.

Further assistance in electronically accessing the publication, or about PAIR, is available by calling the Patent Electronic Business Center at 1-866-217-9197.

Office of Data Managment, Application Assistance Unit (571) 272-4000, or (571) 272-4200, or 1-888-786-0101

UNITED STATES PATENT AND TRADEMARK OFFICE

UNITED STATES DEPARTMENT OF COMMERCE
United States Patent and Trademark Office
Address: COMMISSIONER FOR PATENTS
P.O. Box 1450
Alexandria, Virginia 22313-1450
www.uspto.gov

APPLICATION NO.	FILING DATE	FIRST NAMED INVENTOR	ATTORNEY DOCKET NO.	CONFIRMATION NO.
16/696,383	11/26/2019	Daniel R. Pearson	751391	6816

161268 7590 06/08/2022
LEYDIG VOIT & MAYER, LTD (Klein Tools)
TWO PRUDENTIAL PLAZA, SUITE 4900
180 NORTH STETSON AVENUE
CHICAGO, IL 60601-6731

EXAMINER
NGUYEN, HOAI AN D

ART UNIT	PAPER NUMBER
2858	

NOTIFICATION DATE	DELIVERY MODE
06/08/2022	ELECTRONIC

Please find below and/or attached an Office communication concerning this application or proceeding.

The time period for reply, if any, is set in the attached communication.

Notice of the Office communication was sent electronically on above-indicated "Notification Date" to the following e-mail address(es):

Chgpatent@leydig.com

PTOL-90A (Rev. 04/07)

Office Action Summary	Application No. 16/696,383	Applicant(s) Pearson, Daniel R.	
	Examiner HOAI-AN D NGUYEN	Art Unit 2858	AIA (FITF) Status Yes

-- The MAILING DATE of this communication appears on the cover sheet with the correspondence address --

Period for Reply

A SHORTENED STATUTORY PERIOD FOR REPLY IS SET TO EXPIRE 3 MONTHS FROM THE MAILING DATE OF THIS COMMUNICATION.

- Extensions of time may be available under the provisions of 37 CFR 1.136(a). In no event, however, may a reply be timely filed after SIX (6) MONTHS from the mailing date of this communication.
- If NO period for reply is specified above, the maximum statutory period will apply and will expire SIX (6) MONTHS from the mailing date of this communication.
- Failure to reply within the set or extended period for reply will, by statute, cause the application to become ABANDONED (35 U.S.C. § 133). Any reply received by the Office later than three months after the mailing date of this communication, even if timely filed, may reduce any earned patent term adjustment. See 37 CFR 1.704(b).

Status

1)☐ Responsive to communication(s) filed on _____.

☐ A declaration(s)/affidavit(s) under **37 CFR 1.130(b)** was/were filed on _____.

2a)☐ This action is **FINAL.** 2b) ☑ This action is non-final.

3)☐ An election was made by the applicant in response to a restriction requirement set forth during the interview on _____; the restriction requirement and election have been incorporated into this action.

4)☐ Since this application is in condition for allowance except for formal matters, prosecution as to the merits is closed in accordance with the practice under *Ex parte Quayle*, 1935 C.D. 11, 453 O.G. 213.

Disposition of Claims*

5) ☑ Claim(s) 1-20 is/are pending in the application.

5a) Of the above claim(s) _____ is/are withdrawn from consideration.

6) ☐ Claim(s) _____ is/are allowed.

7) ☑ Claim(s) 1-20 is/are rejected.

8) ☐ Claim(s) _____ is/are objected to.

9) ☐ Claim(s) _____ are subject to restriction and/or election requirement

* If any claims have been determined allowable, you may be eligible to benefit from the **Patent Prosecution Highway** program at a participating intellectual property office for the corresponding application. For more information, please see http://www.uspto.gov/patents/init_events/pph/index.jsp or send an inquiry to **PPHfeedback@uspto.gov.**

Application Papers

10)☐ The specification is objected to by the Examiner.

11)☐ The drawing(s) filed on _____ is/are: a)☐ accepted or b)☐ objected to by the Examiner.

Applicant may not request that any objection to the drawing(s) be held in abeyance. See 37 CFR 1.85(a).

Replacement drawing sheet(s) including the correction is required if the drawing(s) is objected to. See 37 CFR 1.121(d).

Priority under 35 U.S.C. § 119

12)☐ Acknowledgment is made of a claim for foreign priority under 35 U.S.C. § 119(a)-(d) or (f).

Certified copies:

a)☐ All b)☐ Some** c)☐ None of the:

1.☐ Certified copies of the priority documents have been received.

2.☐ Certified copies of the priority documents have been received in Application No. _____.

3.☐ Copies of the certified copies of the priority documents have been received in this National Stage application from the International Bureau (PCT Rule 17.2(a)).

** See the attached detailed Office action for a list of the certified copies not received.

Attachment(s)

1) ☑ Notice of References Cited (PTO-892)

2) ☑ Information Disclosure Statement(s) (PTO/SB/08a and/or PTO/SB/08b) Paper No(s)/Mail Date 5/3/21.

3) ☐ Interview Summary (PTO-413) Paper No(s)/Mail Date _____.

4) ☐ Other: _____.

DETAILED ACTION

Notice of Pre-AIA or AIA Status

1. The present application, filed on or after March 16, 2013, is being examined under the first inventor to file provisions of the AIA.

Information Disclosure Statement

2. The information disclosure statement (IDS) submitted on May 3, 2021 is being considered by the examiner.

Claim Rejections - 35 USC § 103

3. In the event the determination of the status of the application as subject to AIA 35 U.S.C. 102 and 103 (or as subject to pre-AIA 35 U.S.C. 102 and 103) is incorrect, any correction of the statutory basis for the rejection will not be considered a new ground of rejection if the prior art relied upon, and the rationale supporting the rejection, would be the same under either status.

4. The following is a quotation of 35 U.S.C. 103 which forms the basis for all obviousness rejections set forth in this Office action:

> A patent for a claimed invention may not be obtained, notwithstanding that the claimed invention is not identically disclosed as set forth in section 102, if the differences between the claimed invention and the prior art are such that the claimed invention as a whole would have been obvious before the effective filing date of the claimed invention to a person having ordinary skill in the art to which the claimed invention pertains. Patentability shall not be negated by the manner in which the invention was made.

5. Claims 1-20 are rejected under 35 U.S.C. 103 as being unpatentable over Miller et al. (US 2019/0292005 A1) in view of Farretta (US 6,293,519 B1).

Miller et al. teaches a fish tape assembly comprising:

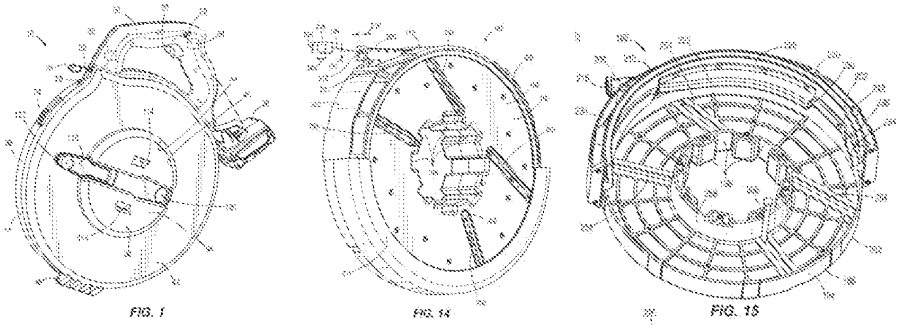

With regard to claims 1, 7 and 16, a fish tape (FIG. 14 in view of FIG. 1, fish tape 196) having a length extending from a first end (FIG. 14 in view of FIG. 1, moving end 218) to a second end (FIG. 14 in view of FIG. 1, anchor end, which is opposite of the moving end 218 and secured to the pin 266); and a donut shaped case (FIG. 14 in view of FIG. 1, fish tape drum 182) having a pair of sidewalls (FIG. 14 in view of FIG. 1, first and second clamshells 190 and 194) extending between a radially innermost wall (FIG. 15 in view of FIG. 1, inner wall 258) and a radially outermost wall (FIG. 15 in view of FIG. 1, outer wall 262), the outermost wall (FIG. 15 in view of FIG. 1, outer wall 262) having an annular opening (FIG. 14 in view of FIG. 1, the rim of the fish tape drum 182) extending around a circumference of one of the inner and outer walls (FIG. 15 in view of FIG. 1, inner wall 258 and outer wall 262), the sidewalls (FIG. 14 in view of FIG. 1, first and second clamshells 190 and 194) being spaced from each other to define a fish tape storage compartment (FIG. 14 in view of FIG. 1, drum portion 186) that stores the length of fish tape (FIG. 14 in view of FIG. 1, fish tape 196) for deployment via the annular opening (FIG. 14 in view of FIG. 1, the rim of the fish tape drum 182) in the case (FIG. 14 in view of FIG. 1, fish tape drum 182); wherein at least one of the sidewalls (FIG. 14 in view of FIG. 1, first clamshell 190) of the case (FIG. 14 in view of FIG. 1, fish tape drum 182) is transparent to allow the luminescent material to be energized by light passing through the at least one of the sidewalls

(FIG. 14 in view of FIG. 1, first clamshell 190) (For more details please read: Abstract; and paragraphs: [0047]-[0050] and [0066]-[0072]).

Miller et al. teaches all that is claimed as discussed in the above rejection of claims 1-7 and 10-14 including the length extending from a first end (FIG. 14 in view of FIG. 1, moving end 218) to a second end (FIG. 14 in view of FIG. 1, anchor end, which is opposite of the moving end 218 and secured to the pin 266), but it does not specifically teach the following feature:

- The length of the fish tape comprising a luminescent material that emits light after being energized by exposure to a light source.

Farretta teaches a luminous snake comprising:

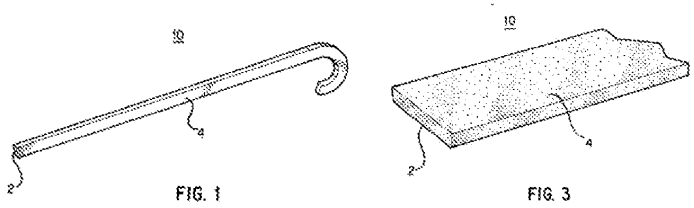

With regard to claims 1, 7 and 16, fish tape (FIG. 1, flexible core strip 2) comprising a luminescent material (FIG. 3 in view of FIG. 1, phosphorescent coating 4) that emits light after being energized by exposure to a light source (From page 9, line 31 to page 10, line 25).

Therefore, it would have been obvious to one having ordinary skill in the art before the effective filing date of the claimed invention to modify the fish tape assembly of Miller et al. to utilize a fish tape comprising a luminescent material that emits light after being energized by exposure to a light source as taught by Farretta since Farretta teaches that such an arrangement is beneficial to provide a fish tape assembly that is visible and easy to locate in the low light

environments of ducts, wall cavities and other passages used to house electrical wiring as disclosed in column 1, lines 8-13.

With regard to claims 2, 3, 8-10, 13, 18 and 19, as Miller et al. teaches one of the sidewalls (FIG. 14 in view of FIG. 1, first clamshell 190) of the case (FIG. 14 in view of FIG. 1, fish tape drum 182) is transparent, these claims do not appear to contain any additional features which, in combination with the features of any claim to which they refer, meet the requirements in respect of inventive step. The additional features of these claims relate to slight modifications in the switching apparatus according to claims 1, 7 and 16 that lie in the scope of what someone skilled in the art is accustomed to performing based on well-known considerations common and commercially available to those skilled in the art. Therefore, it would be easy for a person skilled in the art to conceive of applying these features to the fish tape assembly of Miller et al. according to claims 1, 7 and 16 to take advantage of the physical property of the transparent material to allow the luminescent material to be energized by light passing through the walls.

With regard to claims 4, 11 and 20, Miller et al. teaches one of the sidewalls (FIG. 14 in view of FIG. 1, first clamshell 190) and portions of the innermost and outermost walls (FIG. 15 in view of FIG. 1, inner wall 258 and outer wall 262) are defined by a first component (FIG. 14 in view of FIG. 1, right half of the fish tape drum 182) of the case (FIG. 14 in view of FIG. 1, fish tape drum 182), and the other of the sidewalls (FIG. 14 in view of FIG. 1, second clamshell 194) and other portions of the innermost and outermost walls (FIG. 15 in view of FIG. 1, inner wall 258 and outer wall 262) are defined by a second component (FIG. 15 in view of FIG. 1, left half of the fish tape drum 182) of the case (FIG. 14 in view of FIG. 1, fish tape drum 182), the first and second components being assembled together to form the storage compartment (FIG. 14 in view of FIG. 1, drum portion 186).

With regard to claims 5 and 14, Miller et al. teaches a handle (FIG. 1, handle 56) engaged with the case (FIG. 14 in view of FIG. 1, fish tape drum 182) for sliding movement along the circumference of the outer wall (FIG. 15 in view of FIG. 1, outer wall 262), the handle (FIG. 1, handle 56) engageable with the fish tape (FIG. 14 in view of FIG. 1, fish tape 196) to deploy the fish tape (FIG. 14 in view of FIG. 1, fish tape 196) from the storage compartment (FIG. 14 in view of FIG. 1, drum portion 186) and to reload the fish tape (FIG. 14 in view of FIG. 1, fish tape 196) into the compartment (FIG. 14 in view of FIG. 1, drum portion 186).

With regard to claims 6 and 15, Miller et al. discloses that the fish tape (FIG. 14 in view of FIG. 1, fish tape 196) comprises the first end (FIG. 14 in view of FIG. 1, moving end 218) to the second end (FIG. 14 in view of FIG. 1, anchor end, which is opposite of the moving end 218 and secured to the pin 266), wherein the anchor end (FIG. 30, anchor end 370) is a connector looped over the pin 266 and welded to itself at a weld point 374. It is noted that these claims do not appear to contain any additional features which, in combination with the features of any claim to which they refer, meet the requirements in respect of inventive step. The additional feature, "a threaded opening in at least one of the first and second ends", of these claims relates to slight modifications of the connector at the second end (FIG. 14 in view of FIG. 1, anchor end, which is opposite of the moving end 218 and secured to the pin 266) according to claims 1, 7 and 16 that lie in the scope of what someone skilled in the art is accustomed to performing based on well-known considerations common and commercially available to those skilled in the art. Therefore, it would be easy for a person skilled in the art to conceive of applying this feature to the fish tape assembly of Miller et al. according to claims 1, 7 and 16 to take advantage of desirable and exemplary choices for a specific configuration of a threaded opening in at least one of the first and second ends.

With regard to claim 12, at least one of the first and second components (FIG. 14 in view of FIG. 1, right half of the fish tape drum 182) comprises a transparent material (first clamshell 190 is clear plastic) (Paragraph: [0076]).

With regard to claim 17, the storage compartment (FIG. 14 in view of FIG. 1, drum portion 186) has an annular shape bounded by a pair of spaced sidewalls (FIG. 14 in view of FIG. 1, first and second clamshells 190 and 194).

Conclusion

6. The prior art made of record and not relied upon is considered pertinent to applicant's disclosure. Applicant's attention is invited to the followings whose inventions disclose similar devices.

- Moffatt et al. (US 2015/0330771 A1) teaches a .
- Patterson (US 2009/0257221 A1) teaches a screw on lighted end attachment for use with a flexible snake.
- Radle et al. (US 2006/0065883 A1) teaches a fish tape assembly used by electricians to pull wire through conduit or other spaces, includes fish tape mounted to fish reel and made of electrically non-conductive material having a rectilinear cross-section.
- Konen (US 2005/0062028 A1) teaches a fish tape handle with continuous belt.
- Tucker (US 6,433,703 B1) teaches a fishing reel signaling device.
- Minobe (US 3,601,330 A) teaches a fish tape with adjustable tape engaging lips.

CONTACT INFORMATION

7. Any inquiry concerning this communication or earlier communications from the examiner should be directed to HOAI-AN D. NGUYEN whose telephone number is (571) 272-2170. The examiner can normally be reached MON-THURS (7:00 AM - 5:00 PM).

Examiner interviews are available via telephone, in-person, and video conferencing using a USPTO supplied web-based collaboration tool. To schedule an interview, applicant is encouraged to use the USPTO Automated Interview Request (AIR) at http://www.uspto.gov/interviewpractice.

If attempts to reach the examiner by telephone are unsuccessful, the examiner's supervisor, PATRICK J. ASSOUAD can be reached on 571-272-2210. The fax phone number for the organization where this application or proceeding is assigned is 571-273-8300.

Information regarding the status of published or unpublished applications may be obtained from Patent Center. Unpublished application information in Patent Center is available to registered users. To file and manage patent submissions in Patent Center, visit: https://patentcenter.uspto.gov. Visit https://www.uspto.gov/patents/apply/patent-center for more information about Patent Center and https://www.uspto.gov/patents/docx for information about filing in DOCX format. For additional questions, contact the Electronic Business Center (EBC) at 866-217-9197 (toll-free). If you would like assistance from a USPTO Customer Service Representative, call 800-786-9199 (IN USA OR CANADA) or 571-272-1000.

HOAI-AN D. NGUYEN
Primary Examiner
Art Unit 2858

/HOAI-AN D. NGUYEN/
Primary Examiner, Art Unit 2858

Notice of References Cited	Application/Control No. 16/696,383	Applicant(s)/Patent Under Reexamination Pearson, Daniel R.	
	Examiner HOAI-AN D NGUYEN	Art Unit 2858	Page 1 of 1

U.S. PATENT DOCUMENTS

*		Document Number Country Code-Number-Kind Code	Date MM-YYYY	Name	CPC Classification	US Classification
*	A	US-20190292005-A1	09-2019	Miller; Justin	B65H75/4428	1/1
*	B	US-6433703-B1	08-2002	Tucker; Thomas L.	A01K89/0102	340/815.5
*	C	US-3601330-A	08-1971	Minobe; Mickey M.	H02G11/02	242/405.1
*	D	US-20150330771-A1	11-2015	Moffatt; Wilbur Keith	G01B11/022	356/634
*	E	US-20090257221-A1	10-2009	Patterson; Jason	H02G1/081	362/362
*	F	US-20060065883-A1	03-2006	Radle; Patrick J.	H02G11/02	254/134.3FT
*	G	US-20050062028-A1	03-2005	Konen, Bruce P.	H02G11/02	254/134.3FT
	H					
	I					
	J					
	K					
	L					
	M					

FOREIGN PATENT DOCUMENTS

*		Document Number Country Code-Number-Kind Code	Date MM-YYYY	Country	Name	CPC Classification
	N					
	O					
	P					
	Q					
	R					
	S					
	T					

NON-PATENT DOCUMENTS

*		Include as applicable: Author, Title Date, Publisher, Edition or Volume, Pertinent Pages)
	U	
	V	
	W	
	X	

*A copy of this reference is not being furnished with this Office action. (See MPEP § 707.05(a).)
Dates in MM-YYYY format are publication dates. Classifications may be US or foreign.

Search Notes	Application/Control No.	Applicant(s)/Patent Under Reexamination
	16/696,383	Pearson, Daniel R.
	Examiner	**Art Unit**
	HOAI-AN D NGUYEN	2858

CPC - Searched*		
Symbol	**Date**	**Examiner**
B65H75/00, 02, 34, 36, 362, 364, 38, 40, 406	05/31/2022	HADN
B65H2701/00, 30, 37, 376	05/31/2022	HADN
H02G11/00, 006, 02, 06, 08, 083, 085	05/31/2022	HADN

CPC Combination Sets - Searched*		
Symbol	**Date**	**Examiner**

US Classification - Searched*			
Class	**Subclass**	**Date**	**Examiner**
254	134.3R, 134.3FT	05/31/2022	HADN

* See search history printout included with this form or the SEARCH NOTES box below to determine the scope of the search.

Search Notes		
Search Notes	**Date**	**Examiner**
Considered IDS.	05/31/2022	HADN
Inventor's name searched.	05/31/2022	HADN
Text search in PE2E SEARCH.	05/31/2022	HADN
	06/01/2022	HADN
	06/02/2022	HADN

Search Notes	Application/Control No.	Applicant(s)/Patent Under Reexamination
	16/696,383	Pearson, Daniel R.
	Examiner	**Art Unit**
	HOAI-AN D NGUYEN	2858

Interference Search			
US Class/CPC Symbol	**US Subclass/CPC Group**	**Date**	**Examiner**
Interference Search History Printout.		05/31/2022	HADN

Index of Claims	Application/Control No.	Applicant(s)/Patent Under Reexamination
	16/696,383	Pearson, Daniel R.
	Examiner	**Art Unit**
	HOAI-AN D NGUYEN	2858

✓	Rejected	-	Cancelled	N	Non-Elected	A	Appeal
=	Allowed	÷	Restricted	I	Interference	O	Objected

CLAIMS

☐ Claims renumbered in the same order as presented by applicant ☐ CPA ☐ T.D. ☐ R.1.47

CLAIM		DATE								
Final	Original	06/02/2022								
	1	✓								
	2	✓								
	3	✓								
	4	✓								
	5	✓								
	6	✓								
	7	✓								
	8	✓								
	9	✓								
	10	✓								
	11	✓								
	12	✓								
	13	✓								
	14	✓								
	15	✓								
	16	✓								
	17	✓								
	18	✓								
	19	✓								
	20	✓								

PE2E SEARCH - Search History (Prior Art)

Ref #	Hits	Search Query	DBs	Default Operator	Plurals	British Equivalents	Time Stamp
L1	4	"20210155445"	(US-PGPUB; USPAT; USOCR; FIT (AP, AT, AU, BE, BG, BR, BY, CA, CH, CN, CS, CU, CZ, DD, DE, DK, EA, EE, EP, ES, FI, FR, GB, HR, HU, ID, IE, IL, IS, IT, JP, KR, LT, LU, LV, MA, MC, MD, MY, NL, NO, NZ, OA, PH, PL, PT, RO, RS, RU, SE, SG, SI, SK, SU, TH, TN, TR, TW, UA, VN, WO); FPRS; EPO; JPO; DERWENT; IBM_TDB)	OR	ON	ON	2022/05/31 10:24 AM
L2	317	(Pearson near2 Daniel).inv.	(US-PGPUB; USPAT; USOCR; FIT (AP, AT, AU, BE, BG, BR, BY, CA, CH, CN, CS, CU, CZ, DD, DE, DK, EA, EE, EP, ES, FI, FR, GB, HR, HU, ID, IE, IL, IS, IT, JP, KR, LT, LU, LV, MA, MC, MD, MY, NL, NO, NZ, OA, PH, PL, PT, RO, RS, RU, SE, SG, SI, SK, SU, TH, TN, TR, TW, UA, VN, WO); FPRS; EPO; JPO; DERWENT; IBM_TDB)	OR	ON	ON	2022/05/31 10:28 AM
L3	11	("6,293,519" OR "20040206529" OR "20090257221" OR "20170213431").pn.	(US-PGPUB; USPAT; USOCR; FIT (AP, AT, AU, BE, BG, BR, BY, CA, CH, CN, CS, CU, CZ, DD, DE, DK, EA, EE, EP, ES, FI, FR, GB, HR, HU, ID, IE, IL, IS, IT, JP, KR, LT, LU, LV, MA, MC, MD, MY, NL, NO, NZ, OA, PH, PL, PT, RO, RS, RU, SE, SG, SI, SK, SU, TH, TN, TR, TW, UA, VN, WO); FPRS; EPO; JPO; DERWENT; IBM_TDB)	OR	ON	ON	2022/05/31 10:35 AM
L4	7	ep-1914508-$.did.	(US-PGPUB; USPAT; USOCR; FIT (AP, AT, AU, BE, BG, BR, BY, CA, CH, CN, CS, CU,	OR	ON	ON	2022/05/31 10:52 AM

			CZ, DD, DE, DK, EA, EE, EP, ES, FI, FR, GB, HR, HU, ID, IE, IL, IS, IT, JP, KR, LT, LU, LV, MA, MC, MD, MY, NL, NO, NZ, OA, PH, PL, PT, RO, RS, RU, SE, SG, SI, SK, SU, TH, TN, TR, TW, UA, VN, WO); FPRS; EPO; JPO; DERWENT; IBM_TDB)				
L5	3	jp-2001174202-$.did.	(US-PGPUB; USPAT; USOCR; FIT (AP, AT, AU, BE, BG, BR, BY, CA, CH, CN, CS, CU, CZ, DD, DE, DK, EA, EE, EP, ES, FI, FR, GB, HR, HU, ID, IE, IL, IS, IT, JP, KR, LT, LU, LV, MA, MC, MD, MY, NL, NO, NZ, OA, PH, PL, PT, RO, RS, RU, SE, SG, SI, SK, SU, TH, TN, TR, TW, UA, VN, WO); FPRS; EPO; JPO; DERWENT; IBM_TDB)	OR	ON	ON	2022/05/31 10:53 AM
L6	1282	(B65H75/00.cpc.) AND @ad<"20191126"	(US-PGPUB; USPAT; USOCR; FIT (AP, AT, AU, BE, BG, BR, BY, CA, CH, CN, CS, CU, CZ, DD, DE, DK, EA, EE, EP, ES, FI, FR, GB, HR, HU, ID, IE, IL, IS, IT, JP, KR, LT, LU, LV, MA, MC, MD, MY, NL, NO, NZ, OA, PH, PL, PT, RO, RS, RU, SE, SG, SI, SK, SU, TH, TN, TR, TW, UA, VN, WO); FPRS; EPO; JPO; DERWENT; IBM_TDB)	OR	ON	ON	2022/05/31 11:58 AM
L7	983	(B65H75/02.cpc.) AND @ad<"20191126"	(US-PGPUB; USPAT; USOCR; FIT (AP, AT, AU, BE, BG, BR, BY, CA, CH, CN, CS, CU, CZ, DD, DE, DK, EA, EE, EP, ES, FI, FR, GB, HR, HU, ID, IE, IL, IS, IT, JP, KR, LT, LU, LV, MA, MC, MD, MY, NL, NO, NZ, OA, PH, PL, PT, RO, RS, RU, SE, SG, SI, SK, SU, TH, TN, TR, TW, UA, VN,	OR	ON	ON	2022/05/31 11:59 AM

			WO); FPRS; EPO; JPO; DERWENT; IBM_TDB)				
L8	1128	(B65H75/34.cpc.) AND @ad<"20191126"	(US-PGPUB; USPAT; USOCR; FIT (AP, AT, AU, BE, BG, BR, BY, CA, CH, CN, CS, CU, CZ, DD, DE, DK, EA, EE, EP, ES, FI, FR, GB, HR, HU, ID, IE, IL, IS, IT, JP, KR, LT, LU, LV, MA, MC, MD, MY, NL, NO, NZ, OA, PH, PL, PT, RO, RS, RU, SE, SG, SI, SK, SU, TH, TN, TR, TW, UA, VN, WO); FPRS; EPO; JPO; DERWENT; IBM_TDB)	OR	ON	ON	2022/05/31 11:59 AM
L9	4090	(B65H75/38.cpc.) AND @ad<"20191126"	(US-PGPUB; USPAT; USOCR; FIT (AP, AT, AU, BE, BG, BR, BY, CA, CH, CN, CS, CU, CZ, DD, DE, DK, EA, EE, EP, ES, FI, FR, GB, HR, HU, ID, IE, IL, IS, IT, JP, KR, LT, LU, LV, MA, MC, MD, MY, NL, NO, NZ, OA, PH, PL, PT, RO, RS, RU, SE, SG, SI, SK, SU, TH, TN, TR, TW, UA, VN, WO); FPRS; EPO; JPO; DERWENT; IBM_TDB)	OR	ON	ON	2022/05/31 11:59 AM
L10	2909	(B65H75/40.cpc.) AND @ad<"20191126"	(US-PGPUB; USPAT; USOCR; FIT (AP, AT, AU, BE, BG, BR, BY, CA, CH, CN, CS, CU, CZ, DD, DE, DK, EA, EE, EP, ES, FI, FR, GB, HR, HU, ID, IE, IL, IS, IT, JP, KR, LT, LU, LV, MA, MC, MD, MY, NL, NO, NZ, OA, PH, PL, PT, RO, RS, RU, SE, SG, SI, SK, SU, TH, TN, TR, TW, UA, VN, WO); FPRS; EPO; JPO; DERWENT; IBM_TDB)	OR	ON	ON	2022/05/31 11:59 AM
L11	1991	(B65H75/406.cpc.) AND @ad<"20191126"	(US-PGPUB; USPAT; USOCR; FIT (AP, AT, AU, BE, BG, BR, BY, CA, CH, CN, CS, CU, CZ, DD, DE, DK, EA,	OR	ON	ON	2022/05/31 11:59 AM

			EE, EP, ES, FI, FR, GB, HR, HU, ID, IE, IL, IS, IT, JP, KR, LT, LU, LV, MA, MC, MD, MY, NL, NO, NZ, OA, PH, PL, PT, RO, RS, RU, SE, SG, SI, SK, SU, TH, TN, TR, TW, UA, VN, WO); FPRS; EPO; JPO; DERWENT; IBM_TDB)				
L12	1191	(B65H75/36.cpc.) AND @ad<"20191126"	(US-PGPUB; USPAT; USOCR; FIT (AP, AT, AU, BE, BG, BR, BY, CA, CH, CN, CS, CU, CZ, DD, DE, DK, EA, EE, EP, ES, FI, FR, GB, HR, HU, ID, IE, IL, IS, IT, JP, KR, LT, LU, LV, MA, MC, MD, MY, NL, NO, NZ, OA, PH, PL, PT, RO, RS, RU, SE, SG, SI, SK, SU, TH, TN, TR, TW, UA, VN, WO); FPRS; EPO; JPO; DERWENT; IBM_TDB)	OR	ON	ON	2022/05/31 03:23 PM
L13	852	(B65H75/362.cpc.) AND @ad<"20191126"	(US-PGPUB; USPAT; USOCR; FIT (AP, AT, AU, BE, BG, BR, BY, CA, CH, CN, CS, CU, CZ, DD, DE, DK, EA, EE, EP, ES, FI, FR, GB, HR, HU, ID, IE, IL, IS, IT, JP, KR, LT, LU, LV, MA, MC, MD, MY, NL, NO, NZ, OA, PH, PL, PT, RO, RS, RU, SE, SG, SI, SK, SU, TH, TN, TR, TW, UA, VN, WO); FPRS; EPO; JPO; DERWENT; IBM_TDB)	OR	ON	ON	2022/05/31 03:24 PM
L14	1450	(B65H75/364.cpc.) AND @ad<"20191126"	(US-PGPUB; USPAT; USOCR; FIT (AP, AT, AU, BE, BG, BR, BY, CA, CH, CN, CS, CU, CZ, DD, DE, DK, EA, EE, EP, ES, FI, FR, GB, HR, HU, ID, IE, IL, IS, IT, JP, KR, LT, LU, LV, MA, MC, MD, MY, NL, NO, NZ, OA, PH, PL, PT, RO, RS, RU, SE, SG, SI, SK, SU, TH, TN, TR, TW, UA, VN, WO); FPRS; EPO;	OR	ON	ON	2022/05/31 03:24 PM

			JPO; DERWENT; IBM_TDB)				
L15	28	(B65H2701/00.cpc.) AND @ad<"20191126"	(US-PGPUB; USPAT; USOCR; FIT (AP, AT, AU, BE, BG, BR, BY, CA, CH, CN, CS, CU, CZ, DD, DE, DK, EA, EE, EP, ES, FI, FR, GB, HR, HU, ID, IE, IL, IS, IT, JP, KR, LT, LU, LV, MA, MC, MD, MY, NL, NO, NZ, OA, PH, PL, PT, RO, RS, RU, SE, SG, SI, SK, SU, TH, TN, TR, TW, UA, VN, WO); FPRS; EPO; JPO; DERWENT; IBM_TDB)	OR	ON	ON	2022/05/31 03:26 PM
L16	424	(B65H2701/30.cpc.) AND @ad<"20191126"	(US-PGPUB; USPAT; USOCR; FIT (AP, AT, AU, BE, BG, BR, BY, CA, CH, CN, CS, CU, CZ, DD, DE, DK, EA, EE, EP, ES, FI, FR, GB, HR, HU, ID, IE, IL, IS, IT, JP, KR, LT, LU, LV, MA, MC, MD, MY, NL, NO, NZ, OA, PH, PL, PT, RO, RS, RU, SE, SG, SI, SK, SU, TH, TN, TR, TW, UA, VN, WO); FPRS; EPO; JPO; DERWENT; IBM_TDB)	OR	ON	ON	2022/05/31 03:26 PM
L17	3881	(B65H2701/37.cpc.) AND @ad<"20191126"	(US-PGPUB; USPAT; USOCR; FIT (AP, AT, AU, BE, BG, BR, BY, CA, CH, CN, CS, CU, CZ, DD, DE, DK, EA, EE, EP, ES, FI, FR, GB, HR, HU, ID, IE, IL, IS, IT, JP, KR, LT, LU, LV, MA, MC, MD, MY, NL, NO, NZ, OA, PH, PL, PT, RO, RS, RU, SE, SG, SI, SK, SU, TH, TN, TR, TW, UA, VN, WO); FPRS; EPO; JPO; DERWENT; IBM_TDB)	OR	ON	ON	2022/05/31 03:26 PM
L18	312	(B65H2701/376.cpc.) AND @ad<"20191126"	(US-PGPUB; USPAT; USOCR; FIT (AP, AT, AU, BE, BG, BR, BY, CA, CH, CN, CS, CU, CZ, DD, DE, DK, EA, EE, EP, ES, FI, FR, GB,	OR	ON	ON	2022/05/31 03:27 PM

			HR, HU, ID, IE, IL, IS, IT, JP, KR, LT, LU, LV, MA, MC, MD, MY, NL, NO, NZ, OA, PH, PL, PT, RO, RS, RU, SE, SG, SI, SK, SU, TH, TN, TR, TW, UA, VN, WO); FPRS; EPO; JPO; DERWENT; IBM_TDB)				
L19	11544	(H02G11/00.cpc.) AND @ad<"20191126"	(US-PGPUB; USPAT; USOCR; FIT (AP, AT, AU, BE, BG, BR, BY, CA, CH, CN, CS, CU, CZ, DD, DE, DK, EA, EE, EP, ES, FI, FR, GB, HR, HU, ID, IE, IL, IS, IT, JP, KR, LT, LU, LV, MA, MC, MD, MY, NL, NO, NZ, OA, PH, PL, PT, RO, RS, RU, SE, SG, SI, SK, SU, TH, TN, TR, TW, UA, VN, WO); FPRS; EPO; JPO; DERWENT; IBM_TDB)	OR	ON	ON	2022/05/31 03:30 PM
L20	9021	(H02G11/006.cpc.) AND @ad<"20191126"	(US-PGPUB; USPAT; USOCR; FIT (AP, AT, AU, BE, BG, BR, BY, CA, CH, CN, CS, CU, CZ, DD, DE, DK, EA, EE, EP, ES, FI, FR, GB, HR, HU, ID, IE, IL, IS, IT, JP, KR, LT, LU, LV, MA, MC, MD, MY, NL, NO, NZ, OA, PH, PL, PT, RO, RS, RU, SE, SG, SI, SK, SU, TH, TN, TR, TW, UA, VN, WO); FPRS; EPO; JPO; DERWENT; IBM_TDB)	OR	ON	ON	2022/05/31 03:30 PM
L21	16219	(H02G11/02.cpc.) AND @ad<"20191126"	(US-PGPUB; USPAT; USOCR; FIT (AP, AT, AU, BE, BG, BR, BY, CA, CH, CN, CS, CU, CZ, DD, DE, DK, EA, EE, EP, ES, FI, FR, GB, HR, HU, ID, IE, IL, IS, IT, JP, KR, LT, LU, LV, MA, MC, MD, MY, NL, NO, NZ, OA, PH, PL, PT, RO, RS, RU, SE, SG, SI, SK, SU, TH, TN, TR, TW, UA, VN, WO); FPRS; EPO; JPO; DERWENT;	OR	ON	ON	2022/05/31 03:31 PM

			IBM_TDB)				
L22	7010	(H02G1/06.cpc.) AND @ad<"20191126"	(US-PGPUB; USPAT; USOCR; FIT (AP, AT, AU, BE, BG, BR, BY, CA, CH, CN, CS, CU, CZ, DD, DE, DK, EA, EE, EP, ES, FI, FR, GB, HR, HU, ID, IE, IL, IS, IT, JP, KR, LT, LU, LV, MA, MC, MD, MY, NL, NO, NZ, OA, PH, PL, PT, RO, RS, RU, SE, SG, SI, SK, SU, TH, TN, TR, TW, UA, VN, WO); FPRS; EPO; JPO; DERWENT; IBM_TDB)	OR	ON	ON	2022/05/31 03:39 PM
L23	6928	(H02G1/08.cpc.) AND @ad<"20191126"	(US-PGPUB; USPAT; USOCR; FIT (AP, AT, AU, BE, BG, BR, BY, CA, CH, CN, CS, CU, CZ, DD, DE, DK, EA, EE, EP, ES, FI, FR, GB, HR, HU, ID, IE, IL, IS, IT, JP, KR, LT, LU, LV, MA, MC, MD, MY, NL, NO, NZ, OA, PH, PL, PT, RO, RS, RU, SE, SG, SI, SK, SU, TH, TN, TR, TW, UA, VN, WO); FPRS; EPO; JPO; DERWENT; IBM_TDB)	OR	ON	ON	2022/05/31 03:40 PM
L24	1028	(H02G1/083.cpc.) AND @ad<"20191126"	(US-PGPUB; USPAT; USOCR; FIT (AP, AT, AU, BE, BG, BR, BY, CA, CH, CN, CS, CU, CZ, DD, DE, DK, EA, EE, EP, ES, FI, FR, GB, HR, HU, ID, IE, IL, IS, IT, JP, KR, LT, LU, LV, MA, MC, MD, MY, NL, NO, NZ, OA, PH, PL, PT, RO, RS, RU, SE, SG, SI, SK, SU, TH, TN, TR, TW, UA, VN, WO); FPRS; EPO; JPO; DERWENT; IBM_TDB)	OR	ON	ON	2022/05/31 03:40 PM
L25	1567	(H02G1/085.cpc.) AND @ad<"20191126"	(US-PGPUB; USPAT; USOCR; FIT (AP, AT, AU, BE, BG, BR, BY, CA, CH, CN, CS, CU, CZ, DD, DE, DK, EA, EE, EP, ES, FI, FR, GB, HR, HU, ID, IE, IL, IS,	OR	ON	ON	2022/05/31 03:47 PM

			IT, JP, KR, LT, LU, LV, MA, MC, MD, MY, NL, NO, NZ, OA, PH, PL, PT, RO, RS, RU, SE, SG, SI, SK, SU, TH, TN, TR, TW, UA, VN, WO); FPRS; EPO; JPO; DERWENT; IBM_TDB)				
L26	1132	(254/134.3R.ccls.) AND @ad<"20191126"	(US-PGPUB; USPAT; USOCR; FIT (AP, AT, AU, BE, BG, BR, BY, CA, CH, CN, CS, CU, CZ, DD, DE, DK, EA, EE, EP, ES, FI, FR, GB, HR, HU, ID, IE, IL, IS, IT, JP, KR, LT, LU, LV, MA, MC, MD, MY, NL, NO, NZ, OA, PH, PL, PT, RO, RS, RU, SE, SG, SI, SK, SU, TH, TN, TR, TW, UA, VN, WO); FPRS; EPO; JPO; DERWENT; IBM_TDB)	OR	ON	ON	2022/05/31 04:01 PM
L27	548	(254/134.3FT.ccls.) AND @ad<"20191126"	(US-PGPUB; USPAT; USOCR; FIT (AP, AT, AU, BE, BG, BR, BY, CA, CH, CN, CS, CU, CZ, DD, DE, DK, EA, EE, EP, ES, FI, FR, GB, HR, HU, ID, IE, IL, IS, IT, JP, KR, LT, LU, LV, MA, MC, MD, MY, NL, NO, NZ, OA, PH, PL, PT, RO, RS, RU, SE, SG, SI, SK, SU, TH, TN, TR, TW, UA, VN, WO); FPRS; EPO; JPO; DERWENT; IBM_TDB)	OR	ON	ON	2022/05/31 04:01 PM
L28	4	l2 AND (((fish flex$3) adj2 tape) WITH (length size dimension width range distance) WITH (first adj2 (end$3 terminal point node location)) WITH (second adj2 (end$3 terminal point node location)))	(US-PGPUB; USPAT; USOCR; FIT (AP, AT, AU, BE, BG, BR, BY, CA, CH, CN, CS, CU, CZ, DD, DE, DK, EA, EE, EP, ES, FI, FR, GB, HR, HU, ID, IE, IL, IS, IT, JP, KR, LT, LU, LV, MA, MC, MD, MY, NL, NO, NZ, OA, PH, PL, PT, RO, RS, RU, SE, SG, SI, SK, SU, TH, TN, TR, TW, UA, VN, WO); FPRS; EPO; JPO; DERWENT; IBM_TDB)	OR	ON	ON	2022/05/31 04:28 PM

L29	2	(L6 L7 L8 L9 L10 L11 L12 L13 L14) AND (((fish flex$3) adj2 tape) WITH (length size dimension width range distance) WITH (first adj2 (end$3 terminal point node location)) WITH (second adj2 (end$3 terminal point node location)))	(US-PGPUB; USPAT; USOCR; FIT (AP, AT, AU, BE, BG, BR, BY, CA, CH, CN, CS, CU, CZ, DD, DE, DK, EA, EE, EP, ES, FI, FR, GB, HR, HU, ID, IE, IL, IS, IT, JP, KR, LT, LU, LV, MA, MC, MD, MY, NL, NO, NZ, OA, PH, PL, PT, RO, RS, RU, SE, SG, SI, SK, SU, TH, TN, TR, TW, UA, VN, WO); FPRS; EPO; JPO; DERWENT; IBM_TDB)	OR	ON	ON	2022/05/31 04:43 PM
L30	2	(L15 L16 L17 L18) AND (((fish flex$3) adj2 tape) WITH (length size dimension width range distance) WITH (first adj2 (end$3 terminal point node location)) WITH (second adj2 (end$3 terminal point node location)))	(US-PGPUB; USPAT; USOCR; FIT (AP, AT, AU, BE, BG, BR, BY, CA, CH, CN, CS, CU, CZ, DD, DE, DK, EA, EE, EP, ES, FI, FR, GB, HR, HU, ID, IE, IL, IS, IT, JP, KR, LT, LU, LV, MA, MC, MD, MY, NL, NO, NZ, OA, PH, PL, PT, RO, RS, RU, SE, SG, SI, SK, SU, TH, TN, TR, TW, UA, VN, WO); FPRS; EPO; JPO; DERWENT; IBM_TDB)	OR	ON	ON	2022/05/31 04:44 PM
L31	0	(L19 L20 L21) AND (((fish flex$3) adj2 tape) WITH (length size dimension width range distance) WITH (first adj2 (end$3 terminal point node location)) WITH (second adj2 (end$3 terminal point node location)))	(US-PGPUB; USPAT; USOCR; FIT (AP, AT, AU, BE, BG, BR, BY, CA, CH, CN, CS, CU, CZ, DD, DE, DK, EA, EE, EP, ES, FI, FR, GB, HR, HU, ID, IE, IL, IS, IT, JP, KR, LT, LU, LV, MA, MC, MD, MY, NL, NO, NZ, OA, PH, PL, PT, RO, RS, RU, SE, SG, SI, SK, SU, TH, TN, TR, TW, UA, VN, WO); FPRS; EPO; JPO; DERWENT; IBM_TDB)	OR	ON	ON	2022/05/31 04:48 PM
L32	4	(L26 L27) AND (((fish flex$3) adj2 tape) WITH (length size dimension width range distance) WITH (first adj2 (end$3 terminal point node location)) WITH (second adj2 (end$3 terminal point node	(US-PGPUB; USPAT; USOCR; FIT (AP, AT, AU, BE, BG, BR, BY, CA, CH, CN, CS, CU, CZ, DD, DE, DK, EA, EE, EP, ES, FI, FR, GB, HR, HU, ID, IE, IL, IS, IT, JP, KR, LT, LU, LV, MA, MC, MD, MY, NL,	OR	ON	ON	2022/05/31 04:56 PM

		location)))	NO, NZ, OA, PH, PL, PT, RO, RS, RU, SE, SG, SI, SK, SU, TH, TN, TR, TW, UA, VN, WO); FPRS; EPO; JPO; DERWENT; IBM_TDB)				
L33	6512	(H02G1/00.cpc.) AND @ad<"20191126"	(US-PGPUB; USPAT; USOCR; FIT (AP, AT, AU, BE, BG, BR, BY, CA, CH, CN, CS, CU, CZ, DD, DE, DK, EA, EE, EP, ES, FI, FR, GB, HR, HU, ID, IE, IL, IS, IT, JP, KR, LT, LU, LV, MA, MC, MD, MY, NL, NO, NZ, OA, PH, PL, PT, RO, RS, RU, SE, SG, SI, SK, SU, TH, TN, TR, TW, UA, VN, WO); FPRS; EPO; JPO; DERWENT; IBM_TDB)	OR	ON	ON	2022/05/31 04:57 PM
L34	5	(L22 L23 L24 L25 L33) AND (((fish flex$3) adj2 tape) WITH (length size dimension width range distance) WITH (first adj2 (end$3 terminal point node location)) WITH (second adj2 (end$3 terminal point node location)))	(US-PGPUB; USPAT; USOCR; FIT (AP, AT, AU, BE, BG, BR, BY, CA, CH, CN, CS, CU, CZ, DD, DE, DK, EA, EE, EP, ES, FI, FR, GB, HR, HU, ID, IE, IL, IS, IT, JP, KR, LT, LU, LV, MA, MC, MD, MY, NL, NO, NZ, OA, PH, PL, PT, RO, RS, RU, SE, SG, SI, SK, SU, TH, TN, TR, TW, UA, VN, WO); FPRS; EPO; JPO; DERWENT; IBM_TDB)	OR	ON	ON	2022/05/31 04:58 PM
L35	3	L28 AND (((fish flex$3) adj2 tape) WITH (luminescent adj2 (material substance media medium substrate sheet film micro$1film seal$3 coat$3 protect$3 layer pad wafer lamina plane cover screen compound)) WITH (light adj2 (source supply generat$3 pump gun input)))	(US-PGPUB; USPAT; USOCR; FIT (AP, AT, AU, BE, BG, BR, BY, CA, CH, CN, CS, CU, CZ, DD, DE, DK, EA, EE, EP, ES, FI, FR, GB, HR, HU, ID, IE, IL, IS, IT, JP, KR, LT, LU, LV, MA, MC, MD, MY, NL, NO, NZ, OA, PH, PL, PT, RO, RS, RU, SE, SG, SI, SK, SU, TH, TN, TR, TW, UA, VN, WO); FPRS; EPO; JPO; DERWENT; IBM_TDB)	OR	ON	ON	2022/05/31 05:12 PM
L36	0	L29 AND (((fish flex$3)	(US-PGPUB; USPAT;	OR	ON	ON	2022/05/31

		adj2 tape) WITH (luminescent adj2 (material substance media medium substrate sheet film micro$1film seal$3 coat$3 protect$3 layer pad wafer lamina plane cover screen compound)) WITH (light adj2 (source supply generat$3 pump gun input)))	USOCR; FIT (AP, AT, AU, BE, BG, BR, BY, CA, CH, CN, CS, CU, CZ, DD, DE, DK, EA, EE, EP, ES, FI, FR, GB, HR, HU, ID, IE, IL, IS, IT, JP, KR, LT, LU, LV, MA, MC, MD, MY, NL, NO, NZ, OA, PH, PL, PT, RO, RS, RU, SE, SG, SI, SK, SU, TH, TN, TR, TW, UA, VN, WO); FPRS; EPO; JPO; DERWENT; IBM_TDB)				05:12 PM
L37	0	L30 AND (((fish flex$3) adj2 tape) WITH (luminescent adj2 (material substance media medium substrate sheet film micro$1film seal$3 coat$3 protect$3 layer pad wafer lamina plane cover screen compound)) WITH (light adj2 (source supply generat$3 pump gun input)))	(US-PGPUB; USPAT; USOCR; FIT (AP, AT, AU, BE, BG, BR, BY, CA, CH, CN, CS, CU, CZ, DD, DE, DK, EA, EE, EP, ES, FI, FR, GB, HR, HU, ID, IE, IL, IS, IT, JP, KR, LT, LU, LV, MA, MC, MD, MY, NL, NO, NZ, OA, PH, PL, PT, RO, RS, RU, SE, SG, SI, SK, SU, TH, TN, TR, TW, UA, VN, WO); FPRS; EPO; JPO; DERWENT; IBM_TDB)	OR	ON	ON	2022/05/31 05:12 PM
L38	0	L32 AND (((fish flex$3) adj2 tape) WITH (luminescent adj2 (material substance media medium substrate sheet film micro$1film seal$3 coat$3 protect$3 layer pad wafer lamina plane cover screen compound)) WITH (light adj2 (source supply generat$3 pump gun input)))	(US-PGPUB; USPAT; USOCR; FIT (AP, AT, AU, BE, BG, BR, BY, CA, CH, CN, CS, CU, CZ, DD, DE, DK, EA, EE, EP, ES, FI, FR, GB, HR, HU, ID, IE, IL, IS, IT, JP, KR, LT, LU, LV, MA, MC, MD, MY, NL, NO, NZ, OA, PH, PL, PT, RO, RS, RU, SE, SG, SI, SK, SU, TH, TN, TR, TW, UA, VN, WO); FPRS; EPO; JPO; DERWENT; IBM_TDB)	OR	ON	ON	2022/05/31 05:13 PM
L39	0	L34 AND (((fish flex$3) adj2 tape) WITH (luminescent adj2 (material substance media medium substrate sheet film micro$1film seal$3 coat$3 protect$3 layer pad wafer lamina plane cover screen	(US-PGPUB; USPAT; USOCR; FIT (AP, AT, AU, BE, BG, BR, BY, CA, CH, CN, CS, CU, CZ, DD, DE, DK, EA, EE, EP, ES, FI, FR, GB, HR, HU, ID, IE, IL, IS, IT, JP, KR, LT, LU, LV, MA, MC, MD, MY, NL, NO, NZ, OA, PH, PL,	OR	ON	ON	2022/05/31 05:13 PM

		compound)) WITH (light adj2 (source supply generat$3 pump gun input)))	PT, RO, RS, RU, SE, SG, SI, SK, SU, TH, TN, TR, TW, UA, VN, WO); FPRS; EPO; JPO; DERWENT; IBM_TDB)				
L40	0	(L6 L7 L8 L9 L10 L11 L12 L13 L14) AND (((fish flex$3) adj2 tape) WITH (luminescent adj2 (material substance media medium substrate sheet film micro$1film seal$3 coat$3 protect$3 layer pad wafer lamina plane cover screen compound)) WITH (light adj2 (source supply generat$3 pump gun input)))	(US-PGPUB; USPAT; USOCR; FIT (AP, AT, AU, BE, BG, BR, BY, CA, CH, CN, CS, CU, CZ, DD, DE, DK, EA, EE, EP, ES, FI, FR, GB, HR, HU, ID, IE, IL, IS, IT, JP, KR, LT, LU, LV, MA, MC, MD, MY, NL, NO, NZ, OA, PH, PL, PT, RO, RS, RU, SE, SG, SI, SK, SU, TH, TN, TR, TW, UA, VN, WO); FPRS; EPO; JPO; DERWENT; IBM_TDB)	OR	ON	ON	2022/05/31 05:14 PM
L41	0	(L15 L16 L17 L18) AND (((fish flex$3) adj2 tape) WITH (luminescent adj2 (material substance media medium substrate sheet film micro$1film seal$3 coat$3 protect$3 layer pad wafer lamina plane cover screen compound)) WITH (light adj2 (source supply generat$3 pump gun input)))	(US-PGPUB; USPAT; USOCR; FIT (AP, AT, AU, BE, BG, BR, BY, CA, CH, CN, CS, CU, CZ, DD, DE, DK, EA, EE, EP, ES, FI, FR, GB, HR, HU, ID, IE, IL, IS, IT, JP, KR, LT, LU, LV, MA, MC, MD, MY, NL, NO, NZ, OA, PH, PL, PT, RO, RS, RU, SE, SG, SI, SK, SU, TH, TN, TR, TW, UA, VN, WO); FPRS; EPO; JPO; DERWENT; IBM_TDB)	OR	ON	ON	2022/05/31 05:15 PM
L42	0	(L19 L20 L21) AND (((fish flex$3) adj2 tape) WITH (luminescent adj2 (material substance media medium substrate sheet film micro$1film seal$3 coat$3 protect$3 layer pad wafer lamina plane cover screen compound)) WITH (light adj2 (source supply generat$3 pump gun input)))	(US-PGPUB; USPAT; USOCR; FIT (AP, AT, AU, BE, BG, BR, BY, CA, CH, CN, CS, CU, CZ, DD, DE, DK, EA, EE, EP, ES, FI, FR, GB, HR, HU, ID, IE, IL, IS, IT, JP, KR, LT, LU, LV, MA, MC, MD, MY, NL, NO, NZ, OA, PH, PL, PT, RO, RS, RU, SE, SG, SI, SK, SU, TH, TN, TR, TW, UA, VN, WO); FPRS; EPO; JPO; DERWENT; IBM_TDB)	OR	ON	ON	2022/05/31 05:15 PM
L43	0	(L22 L23 L24 L25 L33) AND (((fish flex$3) adj2	(US-PGPUB; USPAT; USOCR; FIT (AP, AT,	OR	ON	ON	2022/05/31 05:16 PM

		tape) WITH (luminescent adj2 (material substance media medium substrate sheet film micro$1film seal$3 coat$3 protect$3 layer pad wafer lamina plane cover screen compound)) WITH (light adj2 (source supply generat$3 pump gun input)))	AU, BE, BG, BR, BY, CA, CH, CN, CS, CU, CZ, DD, DE, DK, EA, EE, EP, ES, FI, FR, GB, HR, HU, ID, IE, IL, IS, IT, JP, KR, LT, LU, LV, MA, MC, MD, MY, NL, NO, NZ, OA, PH, PL, PT, RO, RS, RU, SE, SG, SI, SK, SU, TH, TN, TR, TW, UA, VN, WO); FPRS; EPO; JPO; DERWENT; IBM_TDB)				
L44	0	(L26 L27) AND (((fish flex$3) adj2 tape) WITH (luminescent adj2 (material substance media medium substrate sheet film micro$1film seal$3 coat$3 protect$3 layer pad wafer lamina plane cover screen compound)) WITH (light adj2 (source supply generat$3 pump gun input)))	(US-PGPUB; USPAT; USOCR; FIT (AP, AT, AU, BE, BG, BR, BY, CA, CH, CN, CS, CU, CZ, DD, DE, DK, EA, EE, EP, ES, FI, FR, GB, HR, HU, ID, IE, IL, IS, IT, JP, KR, LT, LU, LV, MA, MC, MD, MY, NL, NO, NZ, OA, PH, PL, PT, RO, RS, RU, SE, SG, SI, SK, SU, TH, TN, TR, TW, UA, VN, WO); FPRS; EPO; JPO; DERWENT; IBM_TDB)	OR	ON	ON	2022/05/31 05:17 PM
L45	3	L35 AND (((donut ring circle doughnut annulus circular annular) adj2 (frame fixture structure form shap$3 enclose receptacle container holder reservoir enclosure infrastructure chassis housing house framework shell chamber tank envelope box case tube cassette socket body cavity)) WITH (sidewall sidebore bore wall) WITH radial$2 WITH (hole opening aperture orifice outlet entrance port recess window through thru) WITH (circumference perimeter border borderline (boundary adj2 line) delimitation))	(US-PGPUB; USPAT; USOCR; FIT (AP, AT, AU, BE, BG, BR, BY, CA, CH, CN, CS, CU, CZ, DD, DE, DK, EA, EE, EP, ES, FI, FR, GB, HR, HU, ID, IE, IL, IS, IT, JP, KR, LT, LU, LV, MA, MC, MD, MY, NL, NO, NZ, OA, PH, PL, PT, RO, RS, RU, SE, SG, SI, SK, SU, TH, TN, TR, TW, UA, VN, WO); FPRS; EPO; JPO; DERWENT; IBM_TDB)	OR	ON	ON	2022/05/31 05:44 PM
L46	4	(L6 L7 L8 L9 L10 L11 L12 L13 L14) AND (((donut ring circle	(US-PGPUB; USPAT; USOCR; FIT (AP, AT, AU, BE, BG, BR, BY,	OR	ON	ON	2022/05/31 05:48 PM

		doughnut annulus circular annular) adj2 (frame fixture structure form shap$3 enclose receptacle container holder reservoir enclosure infrastructure chassis housing house framework shell chamber tank envelope box case tube cassette socket body cavity)) WITH (sidewall sidebore bore wall) WITH radial$2 WITH (hole opening aperture orifice outlet entrance port recess window through thru) WITH (circumference perimeter border borderline (boundary adj2 line) delimitation))	CA, CH, CN, CS, CU, CZ, DD, DE, DK, EA, EE, EP, ES, FI, FR, GB, HR, HU, ID, IE, IL, IS, IT, JP, KR, LT, LU, LV, MA, MC, MD, MY, NL, NO, NZ, OA, PH, PL, PT, RO, RS, RU, SE, SG, SI, SK, SU, TH, TN, TR, TW, UA, VN, WO); FPRS; EPO; JPO; DERWENT; IBM_TDB)				
L47	1	(L15 L16 L17 L18) AND (((donut ring circle doughnut annulus circular annular) adj2 (frame fixture structure form shap$3 enclose receptacle container holder reservoir enclosure infrastructure chassis housing house framework shell chamber tank envelope box case tube cassette socket body cavity)) WITH (sidewall sidebore bore wall) WITH radial$2 WITH (hole opening aperture orifice outlet entrance port recess window through thru) WITH (circumference perimeter border borderline (boundary adj2 line) delimitation))	(US-PGPUB; USPAT; USOCR; FIT (AP, AT, AU, BE, BG, BR, BY, CA, CH, CN, CS, CU, CZ, DD, DE, DK, EA, EE, EP, ES, FI, FR, GB, HR, HU, ID, IE, IL, IS, IT, JP, KR, LT, LU, LV, MA, MC, MD, MY, NL, NO, NZ, OA, PH, PL, PT, RO, RS, RU, SE, SG, SI, SK, SU, TH, TN, TR, TW, UA, VN, WO); FPRS; EPO; JPO; DERWENT; IBM_TDB)	OR	ON	ON	2022/05/31 05:48 PM
L48	4	(L19 L20 L21) AND (((donut ring circle doughnut annulus circular annular) adj2 (frame fixture structure form shap$3 enclose receptacle container holder reservoir enclosure infrastructure	(US-PGPUB; USPAT; USOCR; FIT (AP, AT, AU, BE, BG, BR, BY, CA, CH, CN, CS, CU, CZ, DD, DE, DK, EA, EE, EP, ES, FI, FR, GB, HR, HU, ID, IE, IL, IS, IT, JP, KR, LT, LU, LV, MA, MC, MD, MY, NL,	OR	ON	ON	2022/05/31 05:48 PM

		chassis housing house framework shell chamber tank envelope box case tube cassette socket body cavity)) WITH (sidewall sidebore bore wall) WITH radial$2 WITH (hole opening aperture orifice outlet entrance port recess window through thru) WITH (circumference perimeter border borderline (boundary adj2 line) delimitation))	NO, NZ, OA, PH, PL, PT, RO, RS, RU, SE, SG, SI, SK, SU, TH, TN, TR, TW, UA, VN, WO); FPRS; EPO; JPO; DERWENT; IBM_TDB)				
L49	1	(L22 L23 L24 L25 L33) AND (((donut ring circle doughnut annulus circular annular) adj2 (frame fixture structure form shap$3 enclose receptacle container holder reservoir enclosure infrastructure chassis housing house framework shell chamber tank envelope box case tube cassette socket body cavity)) WITH (sidewall sidebore bore wall) WITH radial$2 WITH (hole opening aperture orifice outlet entrance port recess window through thru) WITH (circumference perimeter border borderline (boundary adj2 line) delimitation))	(US-PGPUB; USPAT; USOCR; FIT (AP, AT, AU, BE, BG, BR, BY, CA, CH, CN, CS, CU, CZ, DD, DE, DK, EA, EE, EP, ES, FI, FR, GB, HR, HU, ID, IE, IL, IS, IT, JP, KR, LT, LU, LV, MA, MC, MD, MY, NL, NO, NZ, OA, PH, PL, PT, RO, RS, RU, SE, SG, SI, SK, SU, TH, TN, TR, TW, UA, VN, WO); FPRS; EPO; JPO; DERWENT; IBM_TDB)	OR	ON	ON	2022/05/31 05:49 PM
L50	0	(L26 L27) AND (((donut ring circle doughnut annulus circular annular) adj2 (frame fixture structure form shap$3 enclose receptacle container holder reservoir enclosure infrastructure chassis housing house framework shell chamber tank envelope box case tube cassette socket body cavity)) WITH (sidewall sidebore bore wall)	(US-PGPUB; USPAT; USOCR; FIT (AP, AT, AU, BE, BG, BR, BY, CA, CH, CN, CS, CU, CZ, DD, DE, DK, EA, EE, EP, ES, FI, FR, GB, HR, HU, ID, IE, IL, IS, IT, JP, KR, LT, LU, LV, MA, MC, MD, MY, NL, NO, NZ, OA, PH, PL, PT, RO, RS, RU, SE, SG, SI, SK, SU, TH, TN, TR, TW, UA, VN, WO); FPRS; EPO; JPO; DERWENT; IBM_TDB)	OR	ON	ON	2022/05/31 05:49 PM

		WITH radial$2 WITH (hole opening aperture orifice outlet entrance port recess window through thru) WITH (circumference perimeter border borderline (boundary adj2 line) delimitation))					
L51	3	L45 AND ((sidewall sidebore bore wall) WITH (clear transparent crystal) WITH (luminescent adj2 (material substance media medium substrate sheet film micro$1film seal$3 coat$3 protect$3 layer pad wafer lamina plane cover screen compound)) WITH light)	(US-PGPUB; USPAT; USOCR; FIT (AP, AT, AU, BE, BG, BR, BY, CA, CH, CN, CS, CU, CZ, DD, DE, DK, EA, EE, EP, ES, FI, FR, GB, HR, HU, ID, IE, IL, IS, IT, JP, KR, LT, LU, LV, MA, MC, MD, MY, NL, NO, NZ, OA, PH, PL, PT, RO, RS, RU, SE, SG, SI, SK, SU, TH, TN, TR, TW, UA, VN, WO); FPRS; EPO; JPO; DERWENT; IBM_TDB)	OR	ON	ON	2022/05/31 05:58 PM
L52	0	L46 AND ((sidewall sidebore bore wall) WITH (clear transparent crystal) WITH (luminescent adj2 (material substance media medium substrate sheet film micro$1film seal$3 coat$3 protect$3 layer pad wafer lamina plane cover screen compound)) WITH light)	(US-PGPUB; USPAT; USOCR; FIT (AP, AT, AU, BE, BG, BR, BY, CA, CH, CN, CS, CU, CZ, DD, DE, DK, EA, EE, EP, ES, FI, FR, GB, HR, HU, ID, IE, IL, IS, IT, JP, KR, LT, LU, LV, MA, MC, MD, MY, NL, NO, NZ, OA, PH, PL, PT, RO, RS, RU, SE, SG, SI, SK, SU, TH, TN, TR, TW, UA, VN, WO); FPRS; EPO; JPO; DERWENT; IBM_TDB)	OR	ON	ON	2022/05/31 05:58 PM
L53	0	L47 AND ((sidewall sidebore bore wall) WITH (clear transparent crystal) WITH (luminescent adj2 (material substance media medium substrate sheet film micro$1film seal$3 coat$3 protect$3 layer pad wafer lamina plane cover screen compound)) WITH light)	(US-PGPUB; USPAT; USOCR; FIT (AP, AT, AU, BE, BG, BR, BY, CA, CH, CN, CS, CU, CZ, DD, DE, DK, EA, EE, EP, ES, FI, FR, GB, HR, HU, ID, IE, IL, IS, IT, JP, KR, LT, LU, LV, MA, MC, MD, MY, NL, NO, NZ, OA, PH, PL, PT, RO, RS, RU, SE, SG, SI, SK, SU, TH, TN, TR, TW, UA, VN, WO); FPRS; EPO; JPO; DERWENT; IBM_TDB)	OR	ON	ON	2022/05/31 05:58 PM

L54	0	L48 AND ((sidewall sidebore bore wall) WITH (clear transparent crystal) WITH (luminescent adj2 (material substance media medium substrate sheet film micro$1film seal$3 coat$3 protect$3 layer pad wafer lamina plane cover screen compound)) WITH light)	(US-PGPUB; USPAT; USOCR; FIT (AP, AT, AU, BE, BG, BR, BY, CA, CH, CN, CS, CU, CZ, DD, DE, DK, EA, EE, EP, ES, FI, FR, GB, HR, HU, ID, IE, IL, IS, IT, JP, KR, LT, LU, LV, MA, MC, MD, MY, NL, NO, NZ, OA, PH, PL, PT, RO, RS, RU, SE, SG, SI, SK, SU, TH, TN, TR, TW, UA, VN, WO); FPRS; EPO; JPO; DERWENT; IBM_TDB)	OR	ON	ON	2022/05/31 05:58 PM
L55	0	L49 AND ((sidewall sidebore bore wall) WITH (clear transparent crystal) WITH (luminescent adj2 (material substance media medium substrate sheet film micro$1film seal$3 coat$3 protect$3 layer pad wafer lamina plane cover screen compound)) WITH light)	(US-PGPUB; USPAT; USOCR; FIT (AP, AT, AU, BE, BG, BR, BY, CA, CH, CN, CS, CU, CZ, DD, DE, DK, EA, EE, EP, ES, FI, FR, GB, HR, HU, ID, IE, IL, IS, IT, JP, KR, LT, LU, LV, MA, MC, MD, MY, NL, NO, NZ, OA, PH, PL, PT, RO, RS, RU, SE, SG, SI, SK, SU, TH, TN, TR, TW, UA, VN, WO); FPRS; EPO; JPO; DERWENT; IBM_TDB)	OR	ON	ON	2022/05/31 05:59 PM
L56	20	(((fish flex$3) adj2 tape) WITH (length size dimension width range distance) WITH (first adj2 (end$3 terminal point node location)) WITH (second adj2 (end$3 terminal point node location))) AND @ad<"20191126"	(US-PGPUB; USPAT; USOCR; FIT (AP, AT, AU, BE, BG, BR, BY, CA, CH, CN, CS, CU, CZ, DD, DE, DK, EA, EE, EP, ES, FI, FR, GB, HR, HU, ID, IE, IL, IS, IT, JP, KR, LT, LU, LV, MA, MC, MD, MY, NL, NO, NZ, OA, PH, PL, PT, RO, RS, RU, SE, SG, SI, SK, SU, TH, TN, TR, TW, UA, VN, WO); FPRS; EPO; JPO; DERWENT; IBM_TDB)	OR	ON	ON	2022/05/31 06:00 PM
L58	6920	(((donut ring circle doughnut annulus circular annular) adj2 (frame fixture structure form shap$3 enclose receptacle container holder reservoir enclosure infrastructure chassis housing house	(US-PGPUB; USPAT; USOCR; FIT (AP, AT, AU, BE, BG, BR, BY, CA, CH, CN, CS, CU, CZ, DD, DE, DK, EA, EE, EP, ES, FI, FR, GB, HR, HU, ID, IE, IL, IS, IT, JP, KR, LT, LU, LV, MA, MC, MD, MY, NL,	OR	ON	ON	2022/05/31 06:00 PM

		framework shell chamber tank envelope box case tube cassette socket body cavity)) WITH (sidewall sidebore bore wall) WITH radial$2 WITH (hole opening aperture orifice outlet entrance port recess window through thru) WITH (circumference perimeter border borderline (boundary adj2 line) delimitation)) AND @ad<"20191126"	NO, NZ, OA, PH, PL, PT, RO, RS, RU, SE, SG, SI, SK, SU, TH, TN, TR, TW, UA, VN, WO); FPRS; EPO; JPO; DERWENT; IBM_TDB)				
L59	831	((sidewall sidebore bore wall) WITH (clear transparent crystal) WITH (luminescent adj2 (material substance media medium substrate sheet film micro$1film seal$3 coat$3 protect$3 layer pad wafer lamina plane cover screen compound)) WITH light) AND @ad<"20191126"	(US-PGPUB; USPAT; USOCR; FIT (AP, AT, AU, BE, BG, BR, BY, CA, CH, CN, CS, CU, CZ, DD, DE, DK, EA, EE, EP, ES, FI, FR, GB, HR, HU, ID, IE, IL, IS, IT, JP, KR, LT, LU, LV, MA, MC, MD, MY, NL, NO, NZ, OA, PH, PL, PT, RO, RS, RU, SE, SG, SI, SK, SU, TH, TN, TR, TW, UA, VN, WO); FPRS; EPO; JPO; DERWENT; IBM_TDB)	OR	ON	ON	2022/05/31 06:01 PM
L60	0	(((fish flex$3) adj2 tape) WITH luminescent WITH (light adj2 (source supply generat$3 pump gun input))) AND @ad<"20191126"	(US-PGPUB; USPAT; USOCR; FIT (AP, AT, AU, BE, BG, BR, BY, CA, CH, CN, CS, CU, CZ, DD, DE, DK, EA, EE, EP, ES, FI, FR, GB, HR, HU, ID, IE, IL, IS, IT, JP, KR, LT, LU, LV, MA, MC, MD, MY, NL, NO, NZ, OA, PH, PL, PT, RO, RS, RU, SE, SG, SI, SK, SU, TH, TN, TR, TW, UA, VN, WO); FPRS; EPO; JPO; DERWENT; IBM_TDB)	OR	ON	ON	2022/05/31 06:02 PM
L61	0	(((fish flex$3) adj2 tape) WITH luminescen$2 WITH (light adj2 (source supply generat$3 pump gun input))) AND @ad<"20191126"	(US-PGPUB; USPAT; USOCR; FIT (AP, AT, AU, BE, BG, BR, BY, CA, CH, CN, CS, CU, CZ, DD, DE, DK, EA, EE, EP, ES, FI, FR, GB, HR, HU, ID, IE, IL, IS, IT, JP, KR, LT, LU, LV, MA, MC, MD, MY, NL,	OR	ON	ON	2022/05/31 06:03 PM

			NO, NZ, OA, PH, PL, PT, RO, RS, RU, SE, SG, SI, SK, SU, TH, TN, TR, TW, UA, VN, WO); FPRS; EPO; JPO; DERWENT; IBM_TDB)				
L62	0	(((fish flex$3) adj2 tape) WITH (luminescent adj2 (material substance media medium substrate sheet film micro$1film seal$3 coat$3 protect$3 layer pad wafer lamina plane cover screen compound)) WITH (light adj2 (source supply generat$3 pump gun input))) AND @ad<"20191126"	(US-PGPUB; USPAT; USOCR; FIT (AP, AT, AU, BE, BG, BR, BY, CA, CH, CN, CS, CU, CZ, DD, DE, DK, EA, EE, EP, ES, FI, FR, GB, HR, HU, ID, IE, IL, IS, IT, JP, KR, LT, LU, LV, MA, MC, MD, MY, NL, NO, NZ, OA, PH, PL, PT, RO, RS, RU, SE, SG, SI, SK, SU, TH, TN, TR, TW, UA, VN, WO); FPRS; EPO; JPO; DERWENT; IBM_TDB)	OR	ON	ON	2022/05/31 06:04 PM
L63	0	L56 AND l58 AND L59	(US-PGPUB; USPAT; USOCR; FIT (AP, AT, AU, BE, BG, BR, BY, CA, CH, CN, CS, CU, CZ, DD, DE, DK, EA, EE, EP, ES, FI, FR, GB, HR, HU, ID, IE, IL, IS, IT, JP, KR, LT, LU, LV, MA, MC, MD, MY, NL, NO, NZ, OA, PH, PL, PT, RO, RS, RU, SE, SG, SI, SK, SU, TH, TN, TR, TW, UA, VN, WO); FPRS; EPO; JPO; DERWENT; IBM_TDB)	OR	ON	ON	2022/05/31 06:05 PM
L64	0	L56 AND L58	(US-PGPUB; USPAT; USOCR; FIT (AP, AT, AU, BE, BG, BR, BY, CA, CH, CN, CS, CU, CZ, DD, DE, DK, EA, EE, EP, ES, FI, FR, GB, HR, HU, ID, IE, IL, IS, IT, JP, KR, LT, LU, LV, MA, MC, MD, MY, NL, NO, NZ, OA, PH, PL, PT, RO, RS, RU, SE, SG, SI, SK, SU, TH, TN, TR, TW, UA, VN, WO); FPRS; EPO; JPO; DERWENT; IBM_TDB)	OR	ON	ON	2022/05/31 06:05 PM
L65	0	L56 AND L59	(US-PGPUB; USPAT;	OR	ON	ON	2022/05/31

			USOCR; FIT (AP, AT, AU, BE, BG, BR, BY, CA, CH, CN, CS, CU, CZ, DD, DE, DK, EA, EE, EP, ES, FI, FR, GB, HR, HU, ID, IE, IL, IS, IT, JP, KR, LT, LU, LV, MA, MC, MD, MY, NL, NO, NZ, OA, PH, PL, PT, RO, RS, RU, SE, SG, SI, SK, SU, TH, TN, TR, TW, UA, VN, WO); FPRS; EPO; JPO; DERWENT; IBM_TDB)				06:05 PM
L66	0	L58 AND L59	(US-PGPUB; USPAT; USOCR; FIT (AP, AT, AU, BE, BG, BR, BY, CA, CH, CN, CS, CU, CZ, DD, DE, DK, EA, EE, EP, ES, FI, FR, GB, HR, HU, ID, IE, IL, IS, IT, JP, KR, LT, LU, LV, MA, MC, MD, MY, NL, NO, NZ, OA, PH, PL, PT, RO, RS, RU, SE, SG, SI, SK, SU, TH, TN, TR, TW, UA, VN, WO); FPRS; EPO; JPO; DERWENT; IBM_TDB)	OR	ON	ON	2022/05/31 06:05 PM
L68	193	((snak$3 tap$3 chain) WITH ((luminescen$3 luminous phosphorescent visible) adj2 (material substance media medium substrate sheet film micro$1film seal$3 coat$3 protect$3 layer pad wafer lamina plane cover screen compound)) WITH (light adj2 (source supply generat$3 pump gun input))) AND @ad<"20191126"	(US-PGPUB; USPAT; USOCR; FIT (AP, AT, AU, BE, BG, BR, BY, CA, CH, CN, CS, CU, CZ, DD, DE, DK, EA, EE, EP, ES, FI, FR, GB, HR, HU, ID, IE, IL, IS, IT, JP, KR, LT, LU, LV, MA, MC, MD, MY, NL, NO, NZ, OA, PH, PL, PT, RO, RS, RU, SE, SG, SI, SK, SU, TH, TN, TR, TW, UA, VN, WO); FPRS; EPO; JPO; DERWENT; IBM_TDB)	OR	ON	ON	2022/05/31 11:13 PM
L69	17561	((snak$3 tap$3 chain) WITH (length size dimension width range distance) WITH (first adj2 (end$3 terminal point node location)) WITH (second adj2 (end$3 terminal point node location))) AND @ad<"20191126"	(US-PGPUB; USPAT; USOCR; FIT (AP, AT, AU, BE, BG, BR, BY, CA, CH, CN, CS, CU, CZ, DD, DE, DK, EA, EE, EP, ES, FI, FR, GB, HR, HU, ID, IE, IL, IS, IT, JP, KR, LT, LU, LV, MA, MC, MD, MY, NL, NO, NZ, OA, PH, PL,	OR	ON	ON	2022/05/31 11:14 PM

			PT, RO, RS, RU, SE, SG, SI, SK, SU, TH, TN, TR, TW, UA, VN, WO); FPRS; EPO; JPO; DERWENT; IBM_TDB)				
L70	1570	((sidewall sidebore bore wall) WITH (clear transparent crystal) WITH ((luminescen$3 luminous phosphorescent visible) adj2 (material substance media medium substrate sheet film micro$1film seal$3 coat$3 protect$3 layer pad wafer lamina plane cover screen compound)) WITH light) AND @ad<"20191126"	(US-PGPUB; USPAT; USOCR; FIT (AP, AT, AU, BE, BG, BR, BY, CA, CH, CN, CS, CU, CZ, DD, DE, DK, EA, EE, EP, ES, FI, FR, GB, HR, HU, ID, IE, IL, IS, IT, JP, KR, LT, LU, LV, MA, MC, MD, MY, NL, NO, NZ, OA, PH, PL, PT, RO, RS, RU, SE, SG, SI, SK, SU, TH, TN, TR, TW, UA, VN, WO); FPRS; EPO; JPO; DERWENT; IBM_TDB)	OR	ON	ON	2022/05/31 11:22 PM
L71	6920	(((donut ring circle doughnut annulus circular annular) adj2 (frame fixture structure form shap$3 enclose receptacle container holder reservoir enclosure infrastructure chassis housing house framework shell chamber tank envelope box case tube cassette socket body cavity)) WITH (sidewall sidebore bore wall) WITH radial$2 WITH (hole opening aperture orifice outlet entrance port recess window through thru) WITH (circumference perimeter border borderline (boundary adj2 line) delimitation)) AND @ad<"20191126"	(US-PGPUB; USPAT; USOCR; FIT (AP, AT, AU, BE, BG, BR, BY, CA, CH, CN, CS, CU, CZ, DD, DE, DK, EA, EE, EP, ES, FI, FR, GB, HR, HU, ID, IE, IL, IS, IT, JP, KR, LT, LU, LV, MA, MC, MD, MY, NL, NO, NZ, OA, PH, PL, PT, RO, RS, RU, SE, SG, SI, SK, SU, TH, TN, TR, TW, UA, VN, WO); FPRS; EPO; JPO; DERWENT; IBM_TDB)	OR	ON	ON	2022/05/31 11:25 PM
L72	0	L68 AND L69 AND L70 AND L71	(US-PGPUB; USPAT; USOCR; FIT (AP, AT, AU, BE, BG, BR, BY, CA, CH, CN, CS, CU, CZ, DD, DE, DK, EA, EE, EP, ES, FI, FR, GB, HR, HU, ID, IE, IL, IS, IT, JP, KR, LT, LU, LV, MA, MC, MD, MY, NL, NO, NZ, OA, PH, PL,	OR	ON	ON	2022/05/31 11:26 PM

			PT, RO, RS, RU, SE, SG, SI, SK, SU, TH, TN, TR, TW, UA, VN, WO); FPRS; EPO; JPO; DERWENT; IBM_TDB)				
L73	0	L68 AND L69 AND L70	(US-PGPUB; USPAT; USOCR; FIT (AP, AT, AU, BE, BG, BR, BY, CA, CH, CN, CS, CU, CZ, DD, DE, DK, EA, EE, EP, ES, FI, FR, GB, HR, HU, ID, IE, IL, IS, IT, JP, KR, LT, LU, LV, MA, MC, MD, MY, NL, NO, NZ, OA, PH, PL, PT, RO, RS, RU, SE, SG, SI, SK, SU, TH, TN, TR, TW, UA, VN, WO); FPRS; EPO; JPO; DERWENT; IBM_TDB)	OR	ON	ON	2022/05/31 11:27 PM
L74	0	L68 AND L69 AND L71	(US-PGPUB; USPAT; USOCR; FIT (AP, AT, AU, BE, BG, BR, BY, CA, CH, CN, CS, CU, CZ, DD, DE, DK, EA, EE, EP, ES, FI, FR, GB, HR, HU, ID, IE, IL, IS, IT, JP, KR, LT, LU, LV, MA, MC, MD, MY, NL, NO, NZ, OA, PH, PL, PT, RO, RS, RU, SE, SG, SI, SK, SU, TH, TN, TR, TW, UA, VN, WO); FPRS; EPO; JPO; DERWENT; IBM_TDB)	OR	ON	ON	2022/05/31 11:27 PM
L75	0	L68 AND L70 AND L71	(US-PGPUB; USPAT; USOCR; FIT (AP, AT, AU, BE, BG, BR, BY, CA, CH, CN, CS, CU, CZ, DD, DE, DK, EA, EE, EP, ES, FI, FR, GB, HR, HU, ID, IE, IL, IS, IT, JP, KR, LT, LU, LV, MA, MC, MD, MY, NL, NO, NZ, OA, PH, PL, PT, RO, RS, RU, SE, SG, SI, SK, SU, TH, TN, TR, TW, UA, VN, WO); FPRS; EPO; JPO; DERWENT; IBM_TDB)	OR	ON	ON	2022/05/31 11:27 PM
L76	0	L69 AND L70 AND L71	(US-PGPUB; USPAT; USOCR; FIT (AP, AT,	OR	ON	ON	2022/05/31 11:27 PM

			AU, BE, BG, BR, BY, CA, CH, CN, CS, CU, CZ, DD, DE, DK, EA, EE, EP, ES, FI, FR, GB, HR, HU, ID, IE, IL, IS, IT, JP, KR, LT, LU, LV, MA, MC, MD, MY, NL, NO, NZ, OA, PH, PL, PT, RO, RS, RU, SE, SG, SI, SK, SU, TH, TN, TR, TW, UA, VN, WO); FPRS; EPO; JPO; DERWENT; IBM_TDB)				
L77	0	L68 AND L69	(US-PGPUB; USPAT; USOCR; FIT (AP, AT, AU, BE, BG, BR, BY, CA, CH, CN, CS, CU, CZ, DD, DE, DK, EA, EE, EP, ES, FI, FR, GB, HR, HU, ID, IE, IL, IS, IT, JP, KR, LT, LU, LV, MA, MC, MD, MY, NL, NO, NZ, OA, PH, PL, PT, RO, RS, RU, SE, SG, SI, SK, SU, TH, TN, TR, TW, UA, VN, WO); FPRS; EPO; JPO; DERWENT; IBM_TDB)	OR	ON	ON	2022/05/31 11:27 PM
L78	2	L68 AND L70	(US-PGPUB; USPAT; USOCR; FIT (AP, AT, AU, BE, BG, BR, BY, CA, CH, CN, CS, CU, CZ, DD, DE, DK, EA, EE, EP, ES, FI, FR, GB, HR, HU, ID, IE, IL, IS, IT, JP, KR, LT, LU, LV, MA, MC, MD, MY, NL, NO, NZ, OA, PH, PL, PT, RO, RS, RU, SE, SG, SI, SK, SU, TH, TN, TR, TW, UA, VN, WO); FPRS; EPO; JPO; DERWENT; IBM_TDB)	OR	ON	ON	2022/05/31 11:27 PM
L79	0	L68 AND L71	(US-PGPUB; USPAT; USOCR; FIT (AP, AT, AU, BE, BG, BR, BY, CA, CH, CN, CS, CU, CZ, DD, DE, DK, EA, EE, EP, ES, FI, FR, GB, HR, HU, ID, IE, IL, IS, IT, JP, KR, LT, LU, LV, MA, MC, MD, MY, NL, NO, NZ, OA, PH, PL, PT, RO, RS, RU, SE,	OR	ON	ON	2022/05/31 11:28 PM

			SG, SI, SK, SU, TH, TN, TR, TW, UA, VN, WO); FPRS; EPO; JPO; DERWENT; IBM_TDB)				
L80	0	L69 AND L70	(US-PGPUB; USPAT; USOCR; FIT (AP, AT, AU, BE, BG, BR, BY, CA, CH, CN, CS, CU, CZ, DD, DE, DK, EA, EE, EP, ES, FI, FR, GB, HR, HU, ID, IE, IL, IS, IT, JP, KR, LT, LU, LV, MA, MC, MD, MY, NL, NO, NZ, OA, PH, PL, PT, RO, RS, RU, SE, SG, SI, SK, SU, TH, TN, TR, TW, UA, VN, WO); FPRS; EPO; JPO; DERWENT; IBM_TDB)	OR	ON	ON	2022/05/31 11:28 PM
L81	8	L69 AND L71	(US-PGPUB; USPAT; USOCR; FIT (AP, AT, AU, BE, BG, BR, BY, CA, CH, CN, CS, CU, CZ, DD, DE, DK, EA, EE, EP, ES, FI, FR, GB, HR, HU, ID, IE, IL, IS, IT, JP, KR, LT, LU, LV, MA, MC, MD, MY, NL, NO, NZ, OA, PH, PL, PT, RO, RS, RU, SE, SG, SI, SK, SU, TH, TN, TR, TW, UA, VN, WO); FPRS; EPO; JPO; DERWENT; IBM_TDB)	OR	ON	ON	2022/05/31 11:28 PM
L82	0	L70 AND L71	(US-PGPUB; USPAT; USOCR; FIT (AP, AT, AU, BE, BG, BR, BY, CA, CH, CN, CS, CU, CZ, DD, DE, DK, EA, EE, EP, ES, FI, FR, GB, HR, HU, ID, IE, IL, IS, IT, JP, KR, LT, LU, LV, MA, MC, MD, MY, NL, NO, NZ, OA, PH, PL, PT, RO, RS, RU, SE, SG, SI, SK, SU, TH, TN, TR, TW, UA, VN, WO); FPRS; EPO; JPO; DERWENT; IBM_TDB)	OR	ON	ON	2022/05/31 11:28 PM
L86	5	("7565751" OR "20080086902").pn.	(US-PGPUB; USPAT; USOCR; FIT (AP, AT, AU, BE, BG, BR, BY,	OR	ON	ON	2022/06/01 10:34 AM

			CA, CH, CN, CS, CU, CZ, DD, DE, DK, EA, EE, EP, ES, FI, FR, GB, HR, HU, ID, IE, IL, IS, IT, JP, KR, LT, LU, LV, MA, MC, MD, MY, NL, NO, NZ, OA, PH, PL, PT, RO, RS, RU, SE, SG, SI, SK, SU, TH, TN, TR, TW, UA, VN, WO); FPRS; EPO; JPO; DERWENT; IBM_TDB)				
L87	32	("3,606,402" OR "3,600,011" OR "3,181,897").pn.	(US-PGPUB; USPAT; USOCR; FIT (AP, AT, AU, BE, BG, BR, BY, CA, CH, CN, CS, CU, CZ, DD, DE, DK, EA, EE, EP, ES, FI, FR, GB, HR, HU, ID, IE, IL, IS, IT, JP, KR, LT, LU, LV, MA, MC, MD, MY, NL, NO, NZ, OA, PH, PL, PT, RO, RS, RU, SE, SG, SI, SK, SU, TH, TN, TR, TW, UA, VN, WO); FPRS; EPO; JPO; DERWENT; IBM_TDB)	OR	ON	ON	2022/06/01 12:06 PM
L88	938	((snak$3 tap$3 chain reel bobbin spool winder roll$3 rotat$3 spin$4) WITH ((luminescen$3 luminous phosphorescent visible) adj2 (material substance media medium substrate sheet film micro$1film seal$3 coat$3 protect$3 layer pad wafer lamina plane cover screen compound)) WITH (light adj2 (source supply generat$3 pump gun input))) AND @ad<"20191126"	(US-PGPUB; USPAT; USOCR; FIT (AP, AT, AU, BE, BG, BR, BY, CA, CH, CN, CS, CU, CZ, DD, DE, DK, EA, EE, EP, ES, FI, FR, GB, HR, HU, ID, IE, IL, IS, IT, JP, KR, LT, LU, LV, MA, MC, MD, MY, NL, NO, NZ, OA, PH, PL, PT, RO, RS, RU, SE, SG, SI, SK, SU, TH, TN, TR, TW, UA, VN, WO); FPRS; EPO; JPO; DERWENT; IBM_TDB)	OR	ON	ON	2022/06/01 12:14 PM
L89	96735	((snak$3 tap$3 chain reel bobbin spool winder roll$3 rotat$3 spin$) WITH (length size dimension width range distance) WITH (first adj2 (end$3 terminal point node location)) WITH	(US-PGPUB; USPAT; USOCR; FIT (AP, AT, AU, BE, BG, BR, BY, CA, CH, CN, CS, CU, CZ, DD, DE, DK, EA, EE, EP, ES, FI, FR, GB, HR, HU, ID, IE, IL, IS, IT, JP, KR, LT, LU, LV, MA, MC, MD, MY, NL,	OR	ON	ON	2022/06/01 01:53 PM

		(second adj2 (end$3 terminal point node location))) AND @ad<"20191126"	NO, NZ, OA, PH, PL, PT, RO, RS, RU, SE, SG, SI, SK, SU, TH, TN, TR, TW, UA, VN, WO); FPRS; EPO; JPO; DERWENT; IBM_TDB)				
L90	512681	((((feed$3 guid$3 fish$3 push$3 pull$3 direct$3 rout$3) near2 (lead conduct$3 strip$3 wir$3 cord$3 cabl$3 line trace (transmiss$5 adj2 (line medium path channel link trace wir$3)))) WITH (cavity ceiling trusses attic trailer studs conduit pipe wall frame region space structure)) WITH (snak$3 tap$3 chain reel bobbin spool winder roll$3 rotat$3 spin$)) AND @ad<"20191126"	(US-PGPUB; USPAT; USOCR; FIT (AP, AT, AU, BE, BG, BR, BY, CA, CH, CN, CS, CU, CZ, DD, DE, DK, EA, EE, EP, ES, FI, FR, GB, HR, HU, ID, IE, IL, IS, IT, JP, KR, LT, LU, LV, MA, MC, MD, MY, NL, NO, NZ, OA, PH, PL, PT, RO, RS, RU, SE, SG, SI, SK, SU, TH, TN, TR, TW, UA, VN, WO); FPRS; EPO; JPO; DERWENT; IBM_TDB)	OR	ON	ON	2022/06/01 02:03 PM
L91	350596	(((donut ring circle doughnut annulus circular annular) adj2 (frame fixture structure form shap$3 enclose receptacle container holder reservoir enclosure infrastructure chassis housing house framework shell chamber tank envelope box case tube cassette socket body cavity)) WITH (sidewall sidebore bore wall) WITH (innermost inner inward inmost) WITH (outermost outer outmost)) AND @ad<"20191126"	(US-PGPUB; USPAT; USOCR; FIT (AP, AT, AU, BE, BG, BR, BY, CA, CH, CN, CS, CU, CZ, DD, DE, DK, EA, EE, EP, ES, FI, FR, GB, HR, HU, ID, IE, IL, IS, IT, JP, KR, LT, LU, LV, MA, MC, MD, MY, NL, NO, NZ, OA, PH, PL, PT, RO, RS, RU, SE, SG, SI, SK, SU, TH, TN, TR, TW, UA, VN, WO); FPRS; EPO; JPO; DERWENT; IBM_TDB)	OR	ON	ON	2022/06/01 02:09 PM
L92	0	L88 AND L89 AND L90 AND L91	(US-PGPUB; USPAT; USOCR; FIT (AP, AT, AU, BE, BG, BR, BY, CA, CH, CN, CS, CU, CZ, DD, DE, DK, EA, EE, EP, ES, FI, FR, GB, HR, HU, ID, IE, IL, IS, IT, JP, KR, LT, LU, LV, MA, MC, MD, MY, NL, NO, NZ, OA, PH, PL, PT, RO, RS, RU, SE, SG, SI, SK, SU, TH,	OR	ON	ON	2022/06/01 02:10 PM

			TN, TR, TW, UA, VN, WO); FPRS; EPO; JPO; DERWENT; IBM_TDB)				
L93	0	L88 AND L89 AND L90	(US-PGPUB; USPAT; USOCR; FIT (AP, AT, AU, BE, BG, BR, BY, CA, CH, CN, CS, CU, CZ, DD, DE, DK, EA, EE, EP, ES, FI, FR, GB, HR, HU, ID, IE, IL, IS, IT, JP, KR, LT, LU, LV, MA, MC, MD, MY, NL, NO, NZ, OA, PH, PL, PT, RO, RS, RU, SE, SG, SI, SK, SU, TH, TN, TR, TW, UA, VN, WO); FPRS; EPO; JPO; DERWENT; IBM_TDB)	OR	ON	ON	2022/06/01 02:10 PM
L94	0	L88 AND L89 AND L91	(US-PGPUB; USPAT; USOCR; FIT (AP, AT, AU, BE, BG, BR, BY, CA, CH, CN, CS, CU, CZ, DD, DE, DK, EA, EE, EP, ES, FI, FR, GB, HR, HU, ID, IE, IL, IS, IT, JP, KR, LT, LU, LV, MA, MC, MD, MY, NL, NO, NZ, OA, PH, PL, PT, RO, RS, RU, SE, SG, SI, SK, SU, TH, TN, TR, TW, UA, VN, WO); FPRS; EPO; JPO; DERWENT; IBM_TDB)	OR	ON	ON	2022/06/01 02:11 PM
L95	0	L88 AND L90 AND L91	(US-PGPUB; USPAT; USOCR; FIT (AP, AT, AU, BE, BG, BR, BY, CA, CH, CN, CS, CU, CZ, DD, DE, DK, EA, EE, EP, ES, FI, FR, GB, HR, HU, ID, IE, IL, IS, IT, JP, KR, LT, LU, LV, MA, MC, MD, MY, NL, NO, NZ, OA, PH, PL, PT, RO, RS, RU, SE, SG, SI, SK, SU, TH, TN, TR, TW, UA, VN, WO); FPRS; EPO; JPO; DERWENT; IBM_TDB)	OR	ON	ON	2022/06/01 02:11 PM
L96	64	L89 AND L90 AND L91	(US-PGPUB; USPAT; USOCR; FIT (AP, AT, AU, BE, BG, BR, BY, CA, CH, CN, CS, CU,	OR	ON	ON	2022/06/01 02:11 PM

			CZ, DD, DE, DK, EA, EE, EP, ES, FI, FR, GB, HR, HU, ID, IE, IL, IS, IT, JP, KR, LT, LU, LV, MA, MC, MD, MY, NL, NO, NZ, OA, PH, PL, PT, RO, RS, RU, SE, SG, SI, SK, SU, TH, TN, TR, TW, UA, VN, WO); FPRS; EPO; JPO; DERWENT; IBM_TDB)				
L97	0	L88 AND L89	(US-PGPUB; USPAT; USOCR; FIT (AP, AT, AU, BE, BG, BR, BY, CA, CH, CN, CS, CU, CZ, DD, DE, DK, EA, EE, EP, ES, FI, FR, GB, HR, HU, ID, IE, IL, IS, IT, JP, KR, LT, LU, LV, MA, MC, MD, MY, NL, NO, NZ, OA, PH, PL, PT, RO, RS, RU, SE, SG, SI, SK, SU, TH, TN, TR, TW, UA, VN, WO); FPRS; EPO; JPO; DERWENT; IBM_TDB)	OR	ON	ON	2022/06/01 02:12 PM
L98	11	L88 AND L90	(US-PGPUB; USPAT; USOCR; FIT (AP, AT, AU, BE, BG, BR, BY, CA, CH, CN, CS, CU, CZ, DD, DE, DK, EA, EE, EP, ES, FI, FR, GB, HR, HU, ID, IE, IL, IS, IT, JP, KR, LT, LU, LV, MA, MC, MD, MY, NL, NO, NZ, OA, PH, PL, PT, RO, RS, RU, SE, SG, SI, SK, SU, TH, TN, TR, TW, UA, VN, WO); FPRS; EPO; JPO; DERWENT; IBM_TDB)	OR	ON	ON	2022/06/01 02:12 PM
L99	0	L88 AND L91	(US-PGPUB; USPAT; USOCR; FIT (AP, AT, AU, BE, BG, BR, BY, CA, CH, CN, CS, CU, CZ, DD, DE, DK, EA, EE, EP, ES, FI, FR, GB, HR, HU, ID, IE, IL, IS, IT, JP, KR, LT, LU, LV, MA, MC, MD, MY, NL, NO, NZ, OA, PH, PL, PT, RO, RS, RU, SE, SG, SI, SK, SU, TH, TN, TR, TW, UA, VN,	OR	ON	ON	2022/06/01 02:12 PM

			WO); FPRS; EPO; JPO; DERWENT; IBM_TDB)				
L100	3556	L89 AND L90	(US-PGPUB; USPAT; USOCR; FIT (AP, AT, AU, BE, BG, BR, BY, CA, CH, CN, CS, CU, CZ, DD, DE, DK, EA, EE, EP, ES, FI, FR, GB, HR, HU, ID, IE, IL, IS, IT, JP, KR, LT, LU, LV, MA, MC, MD, MY, NL, NO, NZ, OA, PH, PL, PT, RO, RS, RU, SE, SG, SI, SK, SU, TH, TN, TR, TW, UA, VN, WO); FPRS; EPO; JPO; DERWENT; IBM_TDB)	OR	ON	ON	2022/06/01 02:12 PM
L101	815	L89 AND L91	(US-PGPUB; USPAT; USOCR; FIT (AP, AT, AU, BE, BG, BR, BY, CA, CH, CN, CS, CU, CZ, DD, DE, DK, EA, EE, EP, ES, FI, FR, GB, HR, HU, ID, IE, IL, IS, IT, JP, KR, LT, LU, LV, MA, MC, MD, MY, NL, NO, NZ, OA, PH, PL, PT, RO, RS, RU, SE, SG, SI, SK, SU, TH, TN, TR, TW, UA, VN, WO); FPRS; EPO; JPO; DERWENT; IBM_TDB)	OR	ON	ON	2022/06/01 02:13 PM
L102	7271	L90 AND L91	(US-PGPUB; USPAT; USOCR; FIT (AP, AT, AU, BE, BG, BR, BY, CA, CH, CN, CS, CU, CZ, DD, DE, DK, EA, EE, EP, ES, FI, FR, GB, HR, HU, ID, IE, IL, IS, IT, JP, KR, LT, LU, LV, MA, MC, MD, MY, NL, NO, NZ, OA, PH, PL, PT, RO, RS, RU, SE, SG, SI, SK, SU, TH, TN, TR, TW, UA, VN, WO); FPRS; EPO; JPO; DERWENT; IBM_TDB)	OR	ON	ON	2022/06/01 02:13 PM
L104	61549	(((snak$3 tap$3 chain reel bobbin spool winder roll$3 rotat$3 spin$) adj2 (assembly unit system device	(US-PGPUB; USPAT; USOCR; FIT (AP, AT, AU, BE, BG, BR, BY, CA, CH, CN, CS, CU, CZ, DD, DE, DK, EA,	OR	ON	ON	2022/06/01 03:41 PM

		apparatus machine mechanism means module instrument tool equipment structure arrangement)) WITH (((feed$3 guid$3 fish$3 push$3 pull$3 direct$3 rout$3) near2 (lead conduct$3 strip$3 wir$3 cord$3 cabl$3 line trace (transmiss$5 adj2 (line medium path channel link trace wir$3)))) WITH (cavity ceiling trusses attic trailer studs conduit pipe wall frame region space structure))) AND @ad<"20191126"	EE, EP, ES, FI, FR, GB, HR, HU, ID, IE, IL, IS, IT, JP, KR, LT, LU, LV, MA, MC, MD, MY, NL, NO, NZ, OA, PH, PL, PT, RO, RS, RU, SE, SG, SI, SK, SU, TH, TN, TR, TW, UA, VN, WO); FPRS; EPO; JPO; DERWENT; IBM_TDB)				
L105	732	L104 AND L91	(US-PGPUB; USPAT; USOCR; FIT (AP, AT, AU, BE, BG, BR, BY, CA, CH, CN, CS, CU, CZ, DD, DE, DK, EA, EE, EP, ES, FI, FR, GB, HR, HU, ID, IE, IL, IS, IT, JP, KR, LT, LU, LV, MA, MC, MD, MY, NL, NO, NZ, OA, PH, PL, PT, RO, RS, RU, SE, SG, SI, SK, SU, TH, TN, TR, TW, UA, VN, WO); FPRS; EPO; JPO; DERWENT; IBM_TDB)	OR	ON	ON	2022/06/01 03:42 PM
L106	772	(((donut ring circle doughnut annulus circular annular) adj2 (frame fixture structure form shap$3 enclose receptacle container holder reservoir enclosure infrastructure chassis housing house framework shell chamber tank envelope box case tube cassette socket body cavity)) WITH (sidewall sidebore) WITH ((innermost inner inward inmost) adj2 (bore wall)) WITH ((outermost outer outmost) adj2 (bore wall))) AND @ad<"20191126"	(US-PGPUB; USPAT; USOCR; FIT (AP, AT, AU, BE, BG, BR, BY, CA, CH, CN, CS, CU, CZ, DD, DE, DK, EA, EE, EP, ES, FI, FR, GB, HR, HU, ID, IE, IL, IS, IT, JP, KR, LT, LU, LV, MA, MC, MD, MY, NL, NO, NZ, OA, PH, PL, PT, RO, RS, RU, SE, SG, SI, SK, SU, TH, TN, TR, TW, UA, VN, WO); FPRS; EPO; JPO; DERWENT; IBM_TDB)	OR	ON	ON	2022/06/01 03:44 PM

L107	0	L104 AND L106	(US-PGPUB; USPAT; USOCR; FIT (AP, AT, AU, BE, BG, BR, BY, CA, CH, CN, CS, CU, CZ, DD, DE, DK, EA, EE, EP, ES, FI, FR, GB, HR, HU, ID, IE, IL, IS, IT, JP, KR, LT, LU, LV, MA, MC, MD, MY, NL, NO, NZ, OA, PH, PL, PT, RO, RS, RU, SE, SG, SI, SK, SU, TH, TN, TR, TW, UA, VN, WO); FPRS; EPO; JPO; DERWENT; IBM_TDB)	OR	ON	ON	2022/06/01 03:44 PM
L108	185	(((donut ring circle doughnut annulus circular annular) adj2 (frame fixture structure form shap$3 enclose receptacle container holder reservoir enclosure infrastructure chassis housing house framework shell chamber tank envelope box case tube cassette socket body cavity)) WITH (sidewall sidebore) WITH ((innermost inner inward inmost) adj2 (bore wall)) WITH ((outermost outer outmost) adj2 (bore wall)) WITH (snak$3 tap$3 chain reel bobbin spool winder roll$3 rotat$3 spin$)) AND @ad<"20191126"	(US-PGPUB; USPAT; USOCR; FIT (AP, AT, AU, BE, BG, BR, BY, CA, CH, CN, CS, CU, CZ, DD, DE, DK, EA, EE, EP, ES, FI, FR, GB, HR, HU, ID, IE, IL, IS, IT, JP, KR, LT, LU, LV, MA, MC, MD, MY, NL, NO, NZ, OA, PH, PL, PT, RO, RS, RU, SE, SG, SI, SK, SU, TH, TN, TR, TW, UA, VN, WO); FPRS; EPO; JPO; DERWENT; IBM_TDB)	OR	ON	ON	2022/06/01 03:46 PM
L109	17134851	((frame fixture structure form shap$3 enclose receptacle container holder reservoir enclosure infrastructure chassis housing house framework shell chamber tank envelope box case tube cassette socket body cavity) WITH (sav$3 stor$3 put$4 load$3 preserv$3 contain$3 deposit$3 receiv$3 reserv$3 fill$3 stock$3 wind$3 wrap$4 roll$3) WITH (tape lead	(US-PGPUB; USPAT; USOCR; FIT (AP, AT, AU, BE, BG, BR, BY, CA, CH, CN, CS, CU, CZ, DD, DE, DK, EA, EE, EP, ES, FI, FR, GB, HR, HU, ID, IE, IL, IS, IT, JP, KR, LT, LU, LV, MA, MC, MD, MY, NL, NO, NZ, OA, PH, PL, PT, RO, RS, RU, SE, SG, SI, SK, SU, TH, TN, TR, TW, UA, VN, WO); FPRS; EPO; JPO; DERWENT; IBM_TDB)	OR	ON	ON	2022/06/01 09:49 PM

		conduct$3 strip$3 wir$3 cord$3 cabl$3 line trace (transmiss$5 adj2 (line medium path channel link trace wir$3)))) AND @ad<"20191126"					
L110	0	L104 AND L108	(US-PGPUB; USPAT; USOCR; FIT (AP, AT, AU, BE, BG, BR, BY, CA, CH, CN, CS, CU, CZ, DD, DE, DK, EA, EE, EP, ES, FI, FR, GB, HR, HU, ID, IE, IL, IS, IT, JP, KR, LT, LU, LV, MA, MC, MD, MY, NL, NO, NZ, OA, PH, PL, PT, RO, RS, RU, SE, SG, SI, SK, SU, TH, TN, TR, TW, UA, VN, WO); FPRS; EPO; JPO; DERWENT; IBM_TDB)	OR	ON	ON	2022/06/01 09:51 PM
L111	64	L109 AND L108	(US-PGPUB; USPAT; USOCR; FIT (AP, AT, AU, BE, BG, BR, BY, CA, CH, CN, CS, CU, CZ, DD, DE, DK, EA, EE, EP, ES, FI, FR, GB, HR, HU, ID, IE, IL, IS, IT, JP, KR, LT, LU, LV, MA, MC, MD, MY, NL, NO, NZ, OA, PH, PL, PT, RO, RS, RU, SE, SG, SI, SK, SU, TH, TN, TR, TW, UA, VN, WO); FPRS; EPO; JPO; DERWENT; IBM_TDB)	OR	ON	ON	2022/06/01 09:51 PM
L112	168	(((donut ring circle doughnut annulus circular annular) adj2 (frame fixture structure form shap$3 enclose receptacle container holder reservoir enclosure infrastructure chassis housing house framework shell chamber tank envelope box case tube cassette socket body cavity)) WITH (tape lead conduct$3 strip$3 wir$3 cord$3 cabl$3 line trace (transmiss$5 adj2 (line medium path channel link trace wir$3))) WITH	(US-PGPUB; USPAT; USOCR; FIT (AP, AT, AU, BE, BG, BR, BY, CA, CH, CN, CS, CU, CZ, DD, DE, DK, EA, EE, EP, ES, FI, FR, GB, HR, HU, ID, IE, IL, IS, IT, JP, KR, LT, LU, LV, MA, MC, MD, MY, NL, NO, NZ, OA, PH, PL, PT, RO, RS, RU, SE, SG, SI, SK, SU, TH, TN, TR, TW, UA, VN, WO); FPRS; EPO; JPO; DERWENT; IBM_TDB)	OR	ON	ON	2022/06/01 10:08 PM

		(sidewall sidebore) WITH ((innermost inner inward inmost) adj2 (bore wall)) WITH ((outermost outer outmost) adj2 (bore wall))) AND @ad<"20191126"					
L113	793217	(((snak$3 tap$3 chain reel bobbin spool winder roll$3 rotat$3 spin$) adj2 (assembly unit system device apparatus machine mechanism means module instrument tool equipment structure arrangement)) .ti.) AND @ad<"20191126"	(US-PGPUB; USPAT; USOCR; FIT (AP, AT, AU, BE, BG, BR, BY, CA, CH, CN, CS, CU, CZ, DD, DE, DK, EA, EE, EP, ES, FI, FR, GB, HR, HU, ID, IE, IL, IS, IT, JP, KR, LT, LU, LV, MA, MC, MD, MY, NL, NO, NZ, OA, PH, PL, PT, RO, RS, RU, SE, SG, SI, SK, SU, TH, TN, TR, TW, UA, VN, WO); FPRS; EPO; JPO; DERWENT; IBM_TDB)	OR	ON	ON	2022/06/01 10:13 PM
L114	4	L113 AND L106	(US-PGPUB; USPAT; USOCR; FIT (AP, AT, AU, BE, BG, BR, BY, CA, CH, CN, CS, CU, CZ, DD, DE, DK, EA, EE, EP, ES, FI, FR, GB, HR, HU, ID, IE, IL, IS, IT, JP, KR, LT, LU, LV, MA, MC, MD, MY, NL, NO, NZ, OA, PH, PL, PT, RO, RS, RU, SE, SG, SI, SK, SU, TH, TN, TR, TW, UA, VN, WO); FPRS; EPO; JPO; DERWENT; IBM_TDB)	OR	ON	ON	2022/06/01 10:13 PM
L115	7279	L113 AND L104	(US-PGPUB; USPAT; USOCR; FIT (AP, AT, AU, BE, BG, BR, BY, CA, CH, CN, CS, CU, CZ, DD, DE, DK, EA, EE, EP, ES, FI, FR, GB, HR, HU, ID, IE, IL, IS, IT, JP, KR, LT, LU, LV, MA, MC, MD, MY, NL, NO, NZ, OA, PH, PL, PT, RO, RS, RU, SE, SG, SI, SK, SU, TH, TN, TR, TW, UA, VN, WO); FPRS; EPO; JPO; DERWENT; IBM_TDB)	OR	ON	ON	2022/06/01 10:15 PM

L116	5555	L109 AND L115	(US-PGPUB; USPAT; USOCR; FIT (AP, AT, AU, BE, BG, BR, BY, CA, CH, CN, CS, CU, CZ, DD, DE, DK, EA, EE, EP, ES, FI, FR, GB, HR, HU, ID, IE, IL, IS, IT, JP, KR, LT, LU, LV, MA, MC, MD, MY, NL, NO, NZ, OA, PH, PL, PT, RO, RS, RU, SE, SG, SI, SK, SU, TH, TN, TR, TW, UA, VN, WO); FPRS; EPO; JPO; DERWENT; IBM_TDB)	OR	ON	ON	2022/06/01 10:15 PM
L117	50	L89 AND L116	(US-PGPUB; USPAT; USOCR; FIT (AP, AT, AU, BE, BG, BR, BY, CA, CH, CN, CS, CU, CZ, DD, DE, DK, EA, EE, EP, ES, FI, FR, GB, HR, HU, ID, IE, IL, IS, IT, JP, KR, LT, LU, LV, MA, MC, MD, MY, NL, NO, NZ, OA, PH, PL, PT, RO, RS, RU, SE, SG, SI, SK, SU, TH, TN, TR, TW, UA, VN, WO); FPRS; EPO; JPO; DERWENT; IBM_TDB)	OR	ON	ON	2022/06/01 10:16 PM
L118	97966	(((snak$3 tap$3 reel) adj2 (assembly unit system device apparatus machine mechanism means module instrument tool equipment structure arrangement)) .ti.) AND @ad<"20191126"	(US-PGPUB; USPAT; USOCR; FIT (AP, AT, AU, BE, BG, BR, BY, CA, CH, CN, CS, CU, CZ, DD, DE, DK, EA, EE, EP, ES, FI, FR, GB, HR, HU, ID, IE, IL, IS, IT, JP, KR, LT, LU, LV, MA, MC, MD, MY, NL, NO, NZ, OA, PH, PL, PT, RO, RS, RU, SE, SG, SI, SK, SU, TH, TN, TR, TW, UA, VN, WO); FPRS; EPO; JPO; DERWENT; IBM_TDB)	OR	ON	ON	2022/06/01 11:12 PM
L119	1083	L118 AND L104	(US-PGPUB; USPAT; USOCR; FIT (AP, AT, AU, BE, BG, BR, BY, CA, CH, CN, CS, CU, CZ, DD, DE, DK, EA, EE, EP, ES, FI, FR, GB, HR, HU, ID, IE, IL, IS, IT, JP, KR, LT, LU, LV, MA, MC, MD, MY, NL,	OR	ON	ON	2022/06/01 11:12 PM

			NO, NZ, OA, PH, PL, PT, RO, RS, RU, SE, SG, SI, SK, SU, TH, TN, TR, TW, UA, VN, WO); FPRS; EPO; JPO; DERWENT; IBM_TDB)				
L120	0	L118 AND L106	(US-PGPUB; USPAT; USOCR; FIT (AP, AT, AU, BE, BG, BR, BY, CA, CH, CN, CS, CU, CZ, DD, DE, DK, EA, EE, EP, ES, FI, FR, GB, HR, HU, ID, IE, IL, IS, IT, JP, KR, LT, LU, LV, MA, MC, MD, MY, NL, NO, NZ, OA, PH, PL, PT, RO, RS, RU, SE, SG, SI, SK, SU, TH, TN, TR, TW, UA, VN, WO); FPRS; EPO; JPO; DERWENT; IBM_TDB)	OR	ON	ON	2022/06/01 11:13 PM
L121	827	L109 AND L119	(US-PGPUB; USPAT; USOCR; FIT (AP, AT, AU, BE, BG, BR, BY, CA, CH, CN, CS, CU, CZ, DD, DE, DK, EA, EE, EP, ES, FI, FR, GB, HR, HU, ID, IE, IL, IS, IT, JP, KR, LT, LU, LV, MA, MC, MD, MY, NL, NO, NZ, OA, PH, PL, PT, RO, RS, RU, SE, SG, SI, SK, SU, TH, TN, TR, TW, UA, VN, WO); FPRS; EPO; JPO; DERWENT; IBM_TDB)	OR	ON	ON	2022/06/01 11:13 PM
L122	7	L89 AND L121	(US-PGPUB; USPAT; USOCR; FIT (AP, AT, AU, BE, BG, BR, BY, CA, CH, CN, CS, CU, CZ, DD, DE, DK, EA, EE, EP, ES, FI, FR, GB, HR, HU, ID, IE, IL, IS, IT, JP, KR, LT, LU, LV, MA, MC, MD, MY, NL, NO, NZ, OA, PH, PL, PT, RO, RS, RU, SE, SG, SI, SK, SU, TH, TN, TR, TW, UA, VN, WO); FPRS; EPO; JPO; DERWENT; IBM_TDB)	OR	ON	ON	2022/06/01 11:14 PM
L123	0	L112 AND L121	(US-PGPUB; USPAT;	OR	ON	ON	2022/06/01

			USOCR; FIT (AP, AT, AU, BE, BG, BR, BY, CA, CH, CN, CS, CU, CZ, DD, DE, DK, EA, EE, EP, ES, FI, FR, GB, HR, HU, ID, IE, IL, IS, IT, JP, KR, LT, LU, LV, MA, MC, MD, MY, NL, NO, NZ, OA, PH, PL, PT, RO, RS, RU, SE, SG, SI, SK, SU, TH, TN, TR, TW, UA, VN, WO); FPRS; EPO; JPO; DERWENT; IBM_TDB)				11:16 PM
L125	8	L91 AND L121	(US-PGPUB; USPAT; USOCR; FIT (AP, AT, AU, BE, BG, BR, BY, CA, CH, CN, CS, CU, CZ, DD, DE, DK, EA, EE, EP, ES, FI, FR, GB, HR, HU, ID, IE, IL, IS, IT, JP, KR, LT, LU, LV, MA, MC, MD, MY, NL, NO, NZ, OA, PH, PL, PT, RO, RS, RU, SE, SG, SI, SK, SU, TH, TN, TR, TW, UA, VN, WO); FPRS; EPO; JPO; DERWENT; IBM_TDB)	OR	ON	ON	2022/06/01 11:19 PM
L126	58	((fish adj2 (tape taping) adj2 (assembly unit system device apparatus machine mechanism means module instrument tool equipment structure arrangement)) .ti.) AND @ad<"20191126"	(US-PGPUB; USPAT; USOCR; FIT (AP, AT, AU, BE, BG, BR, BY, CA, CH, CN, CS, CU, CZ, DD, DE, DK, EA, EE, EP, ES, FI, FR, GB, HR, HU, ID, IE, IL, IS, IT, JP, KR, LT, LU, LV, MA, MC, MD, MY, NL, NO, NZ, OA, PH, PL, PT, RO, RS, RU, SE, SG, SI, SK, SU, TH, TN, TR, TW, UA, VN, WO); FPRS; EPO; JPO; DERWENT; IBM_TDB)	OR	ON	ON	2022/06/02 08:01 AM
L127	0	L112 AND L126	(US-PGPUB; USPAT; USOCR; FIT (AP, AT, AU, BE, BG, BR, BY, CA, CH, CN, CS, CU, CZ, DD, DE, DK, EA, EE, EP, ES, FI, FR, GB, HR, HU, ID, IE, IL, IS, IT, JP, KR, LT, LU, LV, MA, MC, MD, MY, NL, NO, NZ, OA, PH, PL,	OR	ON	ON	2022/06/02 08:05 AM

			PT, RO, RS, RU, SE, SG, SI, SK, SU, TH, TN, TR, TW, UA, VN, WO); FPRS; EPO; JPO; DERWENT; IBM_TDB)				
L128	33	L109 AND L126	(US-PGPUB; USPAT; USOCR; FIT (AP, AT, AU, BE, BG, BR, BY, CA, CH, CN, CS, CU, CZ, DD, DE, DK, EA, EE, EP, ES, FI, FR, GB, HR, HU, ID, IE, IL, IS, IT, JP, KR, LT, LU, LV, MA, MC, MD, MY, NL, NO, NZ, OA, PH, PL, PT, RO, RS, RU, SE, SG, SI, SK, SU, TH, TN, TR, TW, UA, VN, WO); FPRS; EPO; JPO; DERWENT; IBM_TDB)	OR	ON	ON	2022/06/02 08:06 AM
L129	0	L128 AND L70	(US-PGPUB; USPAT; USOCR; FIT (AP, AT, AU, BE, BG, BR, BY, CA, CH, CN, CS, CU, CZ, DD, DE, DK, EA, EE, EP, ES, FI, FR, GB, HR, HU, ID, IE, IL, IS, IT, JP, KR, LT, LU, LV, MA, MC, MD, MY, NL, NO, NZ, OA, PH, PL, PT, RO, RS, RU, SE, SG, SI, SK, SU, TH, TN, TR, TW, UA, VN, WO); FPRS; EPO; JPO; DERWENT; IBM_TDB)	OR	ON	ON	2022/06/02 08:13 AM
L130	2	L128 AND (sidewall sidebore bore wall) WITH (clear transparent crystal)	(US-PGPUB; USPAT; USOCR; FIT (AP, AT, AU, BE, BG, BR, BY, CA, CH, CN, CS, CU, CZ, DD, DE, DK, EA, EE, EP, ES, FI, FR, GB, HR, HU, ID, IE, IL, IS, IT, JP, KR, LT, LU, LV, MA, MC, MD, MY, NL, NO, NZ, OA, PH, PL, PT, RO, RS, RU, SE, SG, SI, SK, SU, TH, TN, TR, TW, UA, VN, WO); FPRS; EPO; JPO; DERWENT; IBM_TDB)	OR	ON	ON	2022/06/02 08:14 AM
L131	2	L128 AND (clear transparent crystal)	(US-PGPUB; USPAT; USOCR; FIT (AP, AT,	OR	ON	ON	2022/06/02 08:49 AM

			AU, BE, BG, BR, BY, CA, CH, CN, CS, CU, CZ, DD, DE, DK, EA, EE, EP, ES, FI, FR, GB, HR, HU, ID, IE, IL, IS, IT, JP, KR, LT, LU, LV, MA, MC, MD, MY, NL, NO, NZ, OA, PH, PL, PT, RO, RS, RU, SE, SG, SI, SK, SU, TH, TN, TR, TW, UA, VN, WO); FPRS; EPO; JPO; DERWENT; IBM_TDB)				
L132	3	L126 AND (clear transparent crystal)	(US-PGPUB; USPAT; USOCR; FIT (AP, AT, AU, BE, BG, BR, BY, CA, CH, CN, CS, CU, CZ, DD, DE, DK, EA, EE, EP, ES, FI, FR, GB, HR, HU, ID, IE, IL, IS, IT, JP, KR, LT, LU, LV, MA, MC, MD, MY, NL, NO, NZ, OA, PH, PL, PT, RO, RS, RU, SE, SG, SI, SK, SU, TH, TN, TR, TW, UA, VN, WO); FPRS; EPO; JPO; DERWENT; IBM_TDB)	OR	ON	ON	2022/06/02 08:50 AM
L133	43	("8,651,459" OR "4,092,780" OR "4,242,574" OR "4,092,780" OR "4,747,215" OR "5,142,793" OR "7150448" OR "20060065883" OR "20050062028" OR "5,423,516" OR "6416040").pn.	(US-PGPUB; USPAT; USOCR; FIT (AP, AT, AU, BE, BG, BR, BY, CA, CH, CN, CS, CU, CZ, DD, DE, DK, EA, EE, EP, ES, FI, FR, GB, HR, HU, ID, IE, IL, IS, IT, JP, KR, LT, LU, LV, MA, MC, MD, MY, NL, NO, NZ, OA, PH, PL, PT, RO, RS, RU, SE, SG, SI, SK, SU, TH, TN, TR, TW, UA, VN, WO); FPRS; EPO; JPO; DERWENT; IBM_TDB)	OR	ON	ON	2022/06/02 10:37 AM
L137	0	L133 AND (sidewall sidebore bore wall cover) WITH (clear transparent crystal visible visual$5)	(US-PGPUB; USPAT; USOCR; FIT (AP, AT, AU, BE, BG, BR, BY, CA, CH, CN, CS, CU, CZ, DD, DE, DK, EA, EE, EP, ES, FI, FR, GB, HR, HU, ID, IE, IL, IS, IT, JP, KR, LT, LU, LV, MA, MC, MD, MY, NL, NO, NZ, OA, PH, PL, PT, RO, RS, RU, SE,	OR	ON	ON	2022/06/02 10:40 AM

			SG, SI, SK, SU, TH, TN, TR, TW, UA, VN, WO); FPRS; EPO; JPO; DERWENT; IBM_TDB)				
L138	12	L133 AND (clear transparent crystal visible visual$5)	(US-PGPUB; USPAT; USOCR; FIT (AP, AT, AU, BE, BG, BR, BY, CA, CH, CN, CS, CU, CZ, DD, DE, DK, EA, EE, EP, ES, FI, FR, GB, HR, HU, ID, IE, IL, IS, IT, JP, KR, LT, LU, LV, MA, MC, MD, MY, NL, NO, NZ, OA, PH, PL, PT, RO, RS, RU, SE, SG, SI, SK, SU, TH, TN, TR, TW, UA, VN, WO); FPRS; EPO; JPO; DERWENT; IBM_TDB)	OR	ON	ON	2022/06/02 10:40 AM
L140	147074	((reel snak$3 (fish adj2 (tape taping)) adj2 (assembly unit system device apparatus machine mechanism means module instrument tool equipment structure arrangement)) .ti.) AND @ad<"20191126"	(US-PGPUB; USPAT; USOCR; FIT (AP, AT, AU, BE, BG, BR, BY, CA, CH, CN, CS, CU, CZ, DD, DE, DK, EA, EE, EP, ES, FI, FR, GB, HR, HU, ID, IE, IL, IS, IT, JP, KR, LT, LU, LV, MA, MC, MD, MY, NL, NO, NZ, OA, PH, PL, PT, RO, RS, RU, SE, SG, SI, SK, SU, TH, TN, TR, TW, UA, VN, WO); FPRS; EPO; JPO; DERWENT; IBM_TDB)	OR	ON	ON	2022/06/02 10:51 AM
L142	496	L140 AND ((sidewall sidebore bore wall cover) near2 (clear transparent crystal visible visual$5))	(US-PGPUB; USPAT; USOCR; FIT (AP, AT, AU, BE, BG, BR, BY, CA, CH, CN, CS, CU, CZ, DD, DE, DK, EA, EE, EP, ES, FI, FR, GB, HR, HU, ID, IE, IL, IS, IT, JP, KR, LT, LU, LV, MA, MC, MD, MY, NL, NO, NZ, OA, PH, PL, PT, RO, RS, RU, SE, SG, SI, SK, SU, TH, TN, TR, TW, UA, VN, WO); FPRS; EPO; JPO; DERWENT; IBM_TDB)	OR	ON	ON	2022/06/02 10:51 AM
L143	250	L142 AND I109	(US-PGPUB; USPAT; USOCR; FIT (AP, AT, AU, BE, BG, BR, BY,	OR	ON	ON	2022/06/02 10:53 AM

			CA, CH, CN, CS, CU, CZ, DD, DE, DK, EA, EE, EP, ES, FI, FR, GB, HR, HU, ID, IE, IL, IS, IT, JP, KR, LT, LU, LV, MA, MC, MD, MY, NL, NO, NZ, OA, PH, PL, PT, RO, RS, RU, SE, SG, SI, SK, SU, TH, TN, TR, TW, UA, VN, WO); FPRS; EPO; JPO; DERWENT; IBM_TDB)				
L145	3	L143 AND ((reel snak$3 (fish adj2 (tape taping)) adj2 (assembly unit system device apparatus machine mechanism means module instrument tool equipment structure arrangement)) WITH (length size dimension width range distance) WITH (first adj2 (end$3 terminal point node location)) WITH (second adj2 (end$3 terminal point node location)))	(US-PGPUB; USPAT; USOCR; FIT (AP, AT, AU, BE, BG, BR, BY, CA, CH, CN, CS, CU, CZ, DD, DE, DK, EA, EE, EP, ES, FI, FR, GB, HR, HU, ID, IE, IL, IS, IT, JP, KR, LT, LU, LV, MA, MC, MD, MY, NL, NO, NZ, OA, PH, PL, PT, RO, RS, RU, SE, SG, SI, SK, SU, TH, TN, TR, TW, UA, VN, WO); FPRS; EPO; JPO; DERWENT; IBM_TDB)	OR	ON	ON	2022/06/02 10:55 AM
L146	7	L138 AND L109	(US-PGPUB; USPAT; USOCR; FIT (AP, AT, AU, BE, BG, BR, BY, CA, CH, CN, CS, CU, CZ, DD, DE, DK, EA, EE, EP, ES, FI, FR, GB, HR, HU, ID, IE, IL, IS, IT, JP, KR, LT, LU, LV, MA, MC, MD, MY, NL, NO, NZ, OA, PH, PL, PT, RO, RS, RU, SE, SG, SI, SK, SU, TH, TN, TR, TW, UA, VN, WO); FPRS; EPO; JPO; DERWENT; IBM_TDB)	OR	ON	ON	2022/06/02 01:53 PM
L147	31	L121 AND ((sidewall sidebore bore wall cover frame fixture structure form shap$3 enclose receptacle container holder reservoir enclosure infrastructure chassis housing house framework shell chamber tank envelope	(US-PGPUB; USPAT; USOCR; FIT (AP, AT, AU, BE, BG, BR, BY, CA, CH, CN, CS, CU, CZ, DD, DE, DK, EA, EE, EP, ES, FI, FR, GB, HR, HU, ID, IE, IL, IS, IT, JP, KR, LT, LU, LV, MA, MC, MD, MY, NL, NO, NZ, OA, PH, PL, PT, RO, RS, RU, SE,	OR	ON	ON	2022/06/02 02:39 PM

		box case tube cassette socket body cavity) near2 (clear transparent crystal visible visual$5 Translucent))	SG, SI, SK, SU, TH, TN, TR, TW, UA, VN, WO); FPRS; EPO; JPO; DERWENT; IBM_TDB)				
L148	101	L121 AND ((sidewall sidebore bore wall cover frame fixture structure form shap$3 enclose receptacle container holder reservoir enclosure infrastructure chassis housing house framework shell chamber tank envelope box case tube cassette socket body cavity) WITH (clear transparent crystal visible visual$5 Translucent))	(US-PGPUB; USPAT; USOCR; FIT (AP, AT, AU, BE, BG, BR, BY, CA, CH, CN, CS, CU, CZ, DD, DE, DK, EA, EE, EP, ES, FI, FR, GB, HR, HU, ID, IE, IL, IS, IT, JP, KR, LT, LU, LV, MA, MC, MD, MY, NL, NO, NZ, OA, PH, PL, PT, RO, RS, RU, SE, SG, SI, SK, SU, TH, TN, TR, TW, UA, VN, WO); FPRS; EPO; JPO; DERWENT; IBM_TDB)	OR	ON	ON	2022/06/02 02:49 PM
L149	0	L126 AND ((sidewall sidebore bore wall cover frame fixture structure form shap$3 enclose receptacle container holder reservoir enclosure infrastructure chassis housing house framework shell chamber tank envelope box case tube cassette socket body cavity) near2 (clear transparent crystal visible visual$5 Translucent))	(US-PGPUB; USPAT; USOCR; FIT (AP, AT, AU, BE, BG, BR, BY, CA, CH, CN, CS, CU, CZ, DD, DE, DK, EA, EE, EP, ES, FI, FR, GB, HR, HU, ID, IE, IL, IS, IT, JP, KR, LT, LU, LV, MA, MC, MD, MY, NL, NO, NZ, OA, PH, PL, PT, RO, RS, RU, SE, SG, SI, SK, SU, TH, TN, TR, TW, UA, VN, WO); FPRS; EPO; JPO; DERWENT; IBM_TDB)	OR	ON	ON	2022/06/02 03:18 PM
L150	4	L126 AND ((sidewall sidebore bore wall cover frame fixture structure form shap$3 enclose receptacle container holder reservoir enclosure infrastructure chassis housing house framework shell chamber tank envelope box case tube cassette socket body cavity) WITH (clear transparent crystal visible visual$5 Translucent))	(US-PGPUB; USPAT; USOCR; FIT (AP, AT, AU, BE, BG, BR, BY, CA, CH, CN, CS, CU, CZ, DD, DE, DK, EA, EE, EP, ES, FI, FR, GB, HR, HU, ID, IE, IL, IS, IT, JP, KR, LT, LU, LV, MA, MC, MD, MY, NL, NO, NZ, OA, PH, PL, PT, RO, RS, RU, SE, SG, SI, SK, SU, TH, TN, TR, TW, UA, VN, WO); FPRS; EPO; JPO; DERWENT; IBM_TDB)	OR	ON	ON	2022/06/02 03:18 PM

PE2E SEARCH - Search History (Interference)

Ref #	Hits	Search Query	DBs	Default	Plurals	British	Time Stamp

				Operator		Equivalents	
N1	2	(((fish flex$3) adj2 tape) WITH (length size dimension width range distance) WITH (first adj2 (end$3 terminal point node location)) WITH (second adj2 (end$3 terminal point node location))).clm.	(US-PGPUB; USPAT)	OR	ON	ON	2022/05/31 09:03 PM
N2	15	((sidewall sidebore bore wall) WITH (clear transparent crystal) WITH (luminescent adj2 (material substance media medium substrate sheet film micro$1film seal$3 coat$3 protect$3 layer pad wafer lamina plane cover screen compound)) WITH light).clm.	(US-PGPUB; USPAT)	OR	ON	ON	2022/05/31 09:04 PM
N3	242	(((donut ring circle doughnut annulus circular annular) adj2 (frame fixture structure form shap$3 enclose receptacle container holder reservoir enclosure infrastructure chassis housing house framework shell chamber tank envelope box case tube cassette socket body cavity)) WITH (sidewall sidebore bore wall) WITH radial$2 WITH (hole opening aperture orifice outlet entrance port recess window through thru) WITH (circumference perimeter border borderline (boundary adj2 line) delimitation)).clm.	(US-PGPUB; USPAT)	OR	ON	ON	2022/05/31 09:04 PM
N4	1	(((fish flex$3) adj2 tape) WITH (luminescent adj2 (material substance media medium substrate sheet film micro$1film seal$3 coat$3 protect$3 layer pad wafer lamina plane cover screen	(US-PGPUB; USPAT)	OR	ON	ON	2022/05/31 09:04 PM

		compound)) WITH (light adj2 (source supply generat$3 pump gun input))).clm.					
N5	1	(((fish flex$3) adj2 tape) WITH luminescent WITH (light adj2 (source supply generat$3 pump gun input))).clm.	(US-PGPUB; USPAT)	OR	ON	ON	2022/05/31 09:04 PM
N6	1	(((fish flex$3) adj2 tape) WITH luminescen$2 WITH (light adj2 (source supply generat$3 pump gun input))).clm.	(US-PGPUB; USPAT)	OR	ON	ON	2022/05/31 09:04 PM
N7	1	N1 AND N2 AND N3	(US-PGPUB; USPAT)	OR	ON	ON	2022/05/31 09:05 PM
N8	1	N1 AND N2	(US-PGPUB; USPAT)	OR	ON	ON	2022/05/31 09:05 PM
N9	1	N1 AND N3	(US-PGPUB; USPAT)	OR	ON	ON	2022/05/31 09:05 PM
N10	1	N2 AND N3	(US-PGPUB; USPAT)	OR	ON	ON	2022/05/31 09:05 PM
N11	1	N1 AND N2 AND N3	(US-PGPUB; USPAT)	OR	ON	ON	2022/05/31 09:15 PM
N12	1	N1 AND N2	(US-PGPUB; USPAT)	OR	ON	ON	2022/05/31 09:17 PM
N13	1	N1 AND N3	(US-PGPUB; USPAT)	OR	ON	ON	2022/05/31 09:17 PM
N14	1	N2 AND N3	(US-PGPUB; USPAT)	OR	ON	ON	2022/05/31 09:17 PM

Receipt date: 05/03/2021 16/696,383 - GAU: 2858

Substitute for Form 1449A/B/PTO **INFORMATION DISCLOSURE STATEMENT BY APPLICANT**				Patent Application No.	16/696,383
				Confirmation No.	6816
Sheet	1	of	1	Attorney Docket No.	751391

U.S. PATENT DOCUMENTS

Examiner Initials	Doc. No.	U.S. Patent Document: Application or Patent Number	U.S. Patent Document: Kind Code	Name of Patentee or Applicant	Date of Publication	Filing Date If Appropriate
	AA	6,293,519	B1	Farretta	09-25-2001	
	AB	2004/0206529	A1	Sawyer et al.	10-21-2004	
	AC	2009/0257221	A1	Patterson	10-15-2009	
	AD	2017/0213431	A1	Huo	07-27-2017	

FOREIGN PATENT DOCUMENTS

Examiner Initials	Doc. No.	Foreign Patent Document: Office	Foreign Patent Document: Application or Patent Number	Foreign Patent Document: Kind Code	Name of Patentee or Applicant	Date of Publication	Translation *
	AE	EP	1914508	A2	The Stanley Works	04-23-2008	
	AF	JP	2001-174202	A	Hara Rule Mfg.	06-29-2001	English abstract

OTHER - NON PATENT LITERATURE DOCUMENTS

Examiner Initials	Doc. No.	Include name of the author (in CAPITAL LETTERS), title of the article (when appropriate), title of the item (book, magazine, journal, serial, symposium, catalog, etc.), date, page(s), volume-issue number (s), publisher, city and/or country where published.	Translation *
	AG	UNITED KINGDOM INTELLECTUAL PROPERTY OFFICE, Search Report in United Kingdom Patent Application No. GB2018458.6, 4 pp. (Apr. 23, 2021)	

ALL REFERENCES CONSIDERED EXCEPT WHERE LINED THROUGH. /HADN/

Examiner Signature	/HOAI-AN D. NGUYEN/	Date Considered	05/31/2022

* If the reference is not in English, then at least one of the following is provided: (a) an English translation in whole or in part or (b) a concise statement of relevance in the form of, for example, an English language counterpart, an English-language abstract, or an English-language version of the search report or action by a foreign patent office in a counterpart foreign application indicating the degree of relevance found by the foreign office.

Electronic Acknowledgement Receipt

EFS ID:	46578168
Application Number:	16696383
International Application Number:	
Confirmation Number:	6816
Title of Invention:	GLOW FISH TAPE SYSTEM
First Named Inventor/Applicant Name:	Daniel R. Pearson
Customer Number:	161268
Filer:	Jeffery Neal Fairchild
Filer Authorized By:	
Attorney Docket Number:	751391
Receipt Date:	08-SEP-2022
Filing Date:	26-NOV-2019
Time Stamp:	15:37:41
Application Type:	Utility under 35 USC 111(a)

Payment information:

Submitted with Payment	no

File Listing:

Document Number	Document Description	File Name	File Size(Bytes)/ Message Digest	Multi Part /.zip	Pages (if appl.)
1	Amendment/Request for Reconsideration-After Non-Final Rejection	00058P00USResponseToOfficeAction.pdf	74844 31774200c0e32fc6db8ec90b1947fa567048ea1e	no	4

Warnings:

Information:	
Total Files Size (in bytes):	74844

This Acknowledgement Receipt evidences receipt on the noted date by the USPTO of the indicated documents, characterized by the applicant, and including page counts, where applicable. It serves as evidence of receipt similar to a Post Card, as described in MPEP 503.

New Applications Under 35 U.S.C. 111
If a new application is being filed and the application includes the necessary components for a filing date (see 37 CFR 1.53(b)-(d) and MPEP 506), a Filing Receipt (37 CFR 1.54) will be issued in due course and the date shown on this Acknowledgement Receipt will establish the filing date of the application.
National Stage of an International Application under 35 U.S.C. 371
If a timely submission to enter the national stage of an international application is compliant with the conditions of 35 U.S.C. 371 and other applicable requirements a Form PCT/DO/EO/903 indicating acceptance of the application as a national stage submission under 35 U.S.C. 371 will be issued in addition to the Filing Receipt, in due course.
New International Application Filed with the USPTO as a Receiving Office
If a new international application is being filed and the international application includes the necessary components for an international filing date (see PCT Article 11 and MPEP 1810), a Notification of the International Application Number and of the International Filing Date (Form PCT/RO/105) will be issued in due course, subject to prescriptions concerning national security, and the date shown on this Acknowledgement Receipt will establish the international filing date of the application.

IN THE UNITED STATES PATENT AND TRADEMARK OFFICE

Patent Application No. 16/696,383

Confirmation No. 6816

First Named Inventor: Pearson

Filed or 371 Date: 11/26/2019

TC/AU: 2858

Examiner: Nguyen, Hoai An D

Commissioner for Patents

P.O. Box 1450

Alexandria, VA 22313-1450

Response

Sir, in response to the Office Action 06/08/2022, Applicant hereby responds as follows:

Remarks/Arguments

Claims 1-20 are pending and at issue.

The rejection of claims 1-20 as unpatentable over Miller et al. (US 2019/0292005 A1) in view of Farretta (US 6,293,519) is respectfully traversed. The rejection is based on clear mischaracterization of the disclosure of Miller et al., and on a failure to establish a prima facie case of obvious as required by the MPEP.

More specifically, the rejection of all the claims is based on a mischaracterization of the disclosure of Miller et al. In this regard, the rejection asserts that Miller et al. discloses "at least one of the sidewalls (FIG. 14 in view of FIG. 1, first clamshell 190) of the case (FIG. 14 in view of FIG. 1, fish tape drum 182) is transparent to allow luminescent material to be energized by light passing through the at least one of the sidewalls (FIG. 14 in view of FIG. 1, first clamshell 190) (For more details please read: Abstract; and paragraphs [0047]-[0050] and [0066]-[0072])" (emphasis added). Contrary to this assertion, there is nothing in Miller et al. that even hints at a transparent sidewall, let alone teaches a transparent sidewall, let alone further teaches such a sidewall that allows a luminescent material to be energized by light passing through such a sidewall. In this regard, it is further noted that the undersigned can find nothing in the figures and description cited in the rejection (FIG. 14, FIG. 1, the Abstract, and/or paragraphs [0047]-[0050] and [0066]-[0072]) that supports the rejections assertion that the clamshell 190 and/or fish tape drum 182 is transparent as asserted in the rejection. Further in this regard, it is noted that all the figures portray the drum 182 and clamshell 190 as being opaque rather than transparent, with not a single figure, or even a portion of a single figure, being illustrated to show a transparent wall. Indeed, FIGS. 14 and 19 show that the clamshell 190 blocks the view of the interior except where the interior can be view through the slots 250 that extend through the clamshell 190. Farretta also fails to disclose or suggest transparent structures as recited in the claims. Additionally, the rejection expressly admits that Miller et al. fails to disclose a luminescent material as recited in the rejected claims, which is contrary to the assertion in the rejection that Miller et al. discloses a sidewall that is "transparent to allow luminescent material to be energized by light passing through" the sidewall (emphasis added). For these reasons, taken alone or together, Miller at al. and Farretta fail to disclose and/or suggest all the limitations

recited in each of the rejected claims and the rection of claims 1-20 is improper and should be withdrawn.

Because Miller et al. fails to disclose a transparent structure as recited in the claims, there is no support for a modification of Miller et al. by adding the luminescent material of Farretta. Accordingly, the rejection also fails to establish a prima facie case of obviousness as required by the MPEP (See sections 2142-2144) and for this additional reason alone the rejection of all the claims should be withdrawn.

Specifically with respect to the rejection of claims 2, 3, 8-10, 13, 18, and 19, the rejection depends on an "inventive step" standard that isn't required under U.S. patent law. Additionally, the rejection discusses a "switching apparatus" structure that isn't recited in any of the rejected claims. Further, the rejection fails to cite any prior art teaching the additional structure recited in each of claims 2, 3, 8-10, 13, 18, and 19. To the extent the rejection is asserting inherency or that such structure is well known, the assertion is hereby traversed and it is expressly requested that the Examiner provide evidence to support such assertions in any future rejection of the claims. Furthermore, to the extent the rejection attempts to address the structure recited in each of the rejected claims, the attempts are all based on the erroneous assertion that Miller et al. discloses a transparent sidewall. For each of these reasons, taken alone or together, the rejection fails to establish a prima facia case of obviousness against claims 2, 3, 8-10, 13, 18, 19 as required by MPEP sections 2142-44 et seq. Accordingly, the rejection of claims 2, 3, 8-10, 13, 18 and 19 is improper and should be withdrawn.

Specifically with respect to the rejection of claims 5 and 14, the rejection is based on a mischaracterization of Miller et al. In this regard, the rejection asserts that Miller et al. teaches that its handle 56 is engageable with the fish tape 196 to deploy the fish tape from the storage compartment and to reload the fish tape into the compartment Contrary to this assertion, the handle 56 of Miller et al. is not engageable with the fish tape, let alone engageable to deploy or reload the fish tape into a compartment as recited in the rejected claims. In this regard, Miller et al. is specifically directed to a motor driven fish tape device wherein the handle 56 does not engage the fish tape, let alone engage the fish tape to deploy or reload the fish tape. Farretta adds nothing in this regard. Accordingly, taken alone or together, Miller et al. and Farretta fail to

disclose or suggest all of the structure recited in claims 5 and 14 and for this reason alone the rejection of claims 5 and 14 should be withdrawn.

To the extent that a future office action repeats an assertion that Miller et al. discloses transparent structures as recited in the pending claims, it is respectfully requested that the Examiner provide a specific quotation of any language in Miller et al. and an identification of the specific parts of each figure of Miller et al. that the Examiner believes supports the assertion, together with a detailed explanation of how the quoted language and/or identified parts of each figure disclose the transparent structure recited in the claims.

If there are any other issues remaining which the Examiner believes could be resolved through either a Supplemental Response or an Examiner's Amendment, the Examiner is respectfully requested to contact the undersigned at the telephone number indicated below.

Dated: **September 8th, 2022**

Respectfully submitted,

By___/Jeffery N. Fairchild/__

Jeffery N. Fairchild, Reg. No. 37825

Klein Tools
450 Bond Street
Lincolnshire, Il 60069
(847) 821-5549 (Telephone)
Attorney for Applicant

UNITED STATES PATENT AND TRADEMARK OFFICE

UNITED STATES DEPARTMENT OF COMMERCE
United States Patent and Trademark Office
Address: COMMISSIONER FOR PATENTS
P.O. Box 1450
Alexandria, Virginia 22313-1450
www.uspto.gov

APPLICATION NO.	FILING DATE	FIRST NAMED INVENTOR	ATTORNEY DOCKET NO.	CONFIRMATION NO.
16/696,383	11/26/2019	Daniel R. Pearson	751391	6816

161268 7590 09/26/2022
LEYDIG VOIT & MAYER, LTD (Klein Tools)
TWO PRUDENTIAL PLAZA, SUITE 4900
180 NORTH STETSON AVENUE
CHICAGO, IL 60601-6731

EXAMINER
NGUYEN, HOAI AN D

ART UNIT	PAPER NUMBER
2858	

NOTIFICATION DATE	DELIVERY MODE
09/26/2022	ELECTRONIC

Please find below and/or attached an Office communication concerning this application or proceeding.

The time period for reply, if any, is set in the attached communication.

Notice of the Office communication was sent electronically on above-indicated "Notification Date" to the following e-mail address(es):

Chgpatent@leydig.com

PTOL-90A (Rev. 04/07)

Office Action Summary	Application No. 16/696,383	Applicant(s) Pearson, Daniel R.	
	Examiner HOAI-AN D NGUYEN	Art Unit 2858	AIA (FITF) Status Yes

-- The MAILING DATE of this communication appears on the cover sheet with the correspondence address --

Period for Reply

A SHORTENED STATUTORY PERIOD FOR REPLY IS SET TO EXPIRE 3 MONTHS FROM THE MAILING DATE OF THIS COMMUNICATION.

- Extensions of time may be available under the provisions of 37 CFR 1.136(a). In no event, however, may a reply be timely filed after SIX (6) MONTHS from the mailing date of this communication.
- If NO period for reply is specified above, the maximum statutory period will apply and will expire SIX (6) MONTHS from the mailing date of this communication.
- Failure to reply within the set or extended period for reply will, by statute, cause the application to become ABANDONED (35 U.S.C. § 133). Any reply received by the Office later than three months after the mailing date of this communication, even if timely filed, may reduce any earned patent term adjustment. See 37 CFR 1.704(b).

Status

1)☑ Responsive to communication(s) filed on September 8, 2022.

☐ A declaration(s)/affidavit(s) under **37 CFR 1.130(b)** was/were filed on _____.

2a)☑ This action is **FINAL.** 2b) ☐ This action is non-final.

3)☐ An election was made by the applicant in response to a restriction requirement set forth during the interview on _____; the restriction requirement and election have been incorporated into this action.

4)☐ Since this application is in condition for allowance except for formal matters, prosecution as to the merits is closed in accordance with the practice under *Ex parte Quayle*, 1935 C.D. 11, 453 O.G. 213.

Disposition of Claims*

5) ☑ Claim(s) 1-20 is/are pending in the application.

5a) Of the above claim(s) _____ is/are withdrawn from consideration.

6) ☐ Claim(s) _____ is/are allowed.

7) ☑ Claim(s) 1-20 is/are rejected.

8) ☐ Claim(s) _____ is/are objected to.

9) ☐ Claim(s) _____ are subject to restriction and/or election requirement

* If any claims have been determined allowable, you may be eligible to benefit from the **Patent Prosecution Highway** program at a participating intellectual property office for the corresponding application. For more information, please see http://www.uspto.gov/patents/init_events/pph/index.jsp or send an inquiry to **PPHfeedback@uspto.gov.**

Application Papers

10)☐ The specification is objected to by the Examiner.

11)☐ The drawing(s) filed on _____ is/are: a)☐ accepted or b)☐ objected to by the Examiner.

Applicant may not request that any objection to the drawing(s) be held in abeyance. See 37 CFR 1.85(a).

Replacement drawing sheet(s) including the correction is required if the drawing(s) is objected to. See 37 CFR 1.121(d).

Priority under 35 U.S.C. § 119

12)☐ Acknowledgment is made of a claim for foreign priority under 35 U.S.C. § 119(a)-(d) or (f).

Certified copies:

a)☐ All b)☐ Some** c)☐ None of the:

1.☐ Certified copies of the priority documents have been received.

2.☐ Certified copies of the priority documents have been received in Application No. _____.

3.☐ Copies of the certified copies of the priority documents have been received in this National Stage application from the International Bureau (PCT Rule 17.2(a)).

** See the attached detailed Office action for a list of the certified copies not received.

Attachment(s)

1) ☐ Notice of References Cited (PTO-892)

2) ☐ Information Disclosure Statement(s) (PTO/SB/08a and/or PTO/SB/08b) Paper No(s)/Mail Date _____.

3) ☐ Interview Summary (PTO-413) Paper No(s)/Mail Date _____.

4) ☐ Other: _____.

DETAILED ACTION

Notice of Pre-AIA or AIA Status

1. The present application, filed on or after March 16, 2013, is being examined under the first inventor to file provisions of the AIA.

Response to Amendment

2. Receipt is acknowledged of the Amendment filed on September 8, 2022. Accordingly, claims 1-20 are currently pending in the application.

Claim Rejections - 35 USC § 103

3. In the event the determination of the status of the application as subject to AIA 35 U.S.C. 102 and 103 (or as subject to pre-AIA 35 U.S.C. 102 and 103) is incorrect, any correction of the statutory basis for the rejection will not be considered a new ground of rejection if the prior art relied upon, and the rationale supporting the rejection, would be the same under either status.

4. The following is a quotation of 35 U.S.C. 103 which forms the basis for all obviousness rejections set forth in this Office action:

> A patent for a claimed invention may not be obtained, notwithstanding that the claimed invention is not identically disclosed as set forth in section 102, if the differences between the claimed invention and the prior art are such that the claimed invention as a whole would have been obvious before the effective filing date of the claimed invention to a person having ordinary skill in the art to which the claimed invention pertains. Patentability shall not be negated by the manner in which the invention was made.

5. Claims 1-20 are rejected under 35 U.S.C. 103 as being unpatentable over Miller et al. (US 2019/0292005 A1) in view of Farretta (US 6,293,519 B1).

Miller et al. teaches a fish tape assembly comprising:

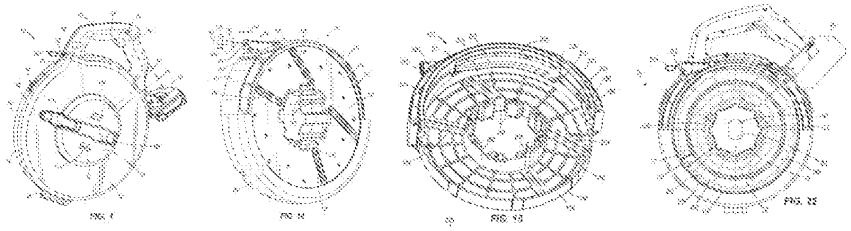

With regard to claims 1, 7 and 16, a fish tape (FIG. 14 in view of FIG. 1, fish tape 196) having a length extending from a first end (FIG. 14 in view of FIG. 1, moving end 218) to a second end (FIG. 14 in view of FIG. 1, anchor end, which is opposite of the moving end 218 and secured to the pin 266); and a donut shaped case (FIG. 14 in view of FIG. 1, fish tape drum 182) having a pair of sidewalls (FIG. 14 in view of FIG. 1, first and second clamshells 190 and 194) extending between a radially innermost wall (FIG. 15 in view of FIG. 1, inner wall 258) and a radially outermost wall (FIG. 15 in view of FIG. 1, outer wall 262), the outermost wall (FIG. 15 in view of FIG. 1, outer wall 262) having an annular opening (FIG. 14 in view of FIG. 1, the rim of the fish tape drum 182) extending around a circumference of one of the inner and outer walls (FIG. 15 in view of FIG. 1, inner wall 258 and outer wall 262), the sidewalls (FIG. 14 in view of FIG. 1, first and second clamshells 190 and 194) being spaced from each other to define a fish tape storage compartment (FIG. 14 in view of FIG. 1, drum portion 186) that stores the length of fish tape (FIG. 14 in view of FIG. 1, fish tape 196) for deployment via the annular opening (FIG. 14 in view of FIG. 1, the rim of the fish tape drum 182) in the case (FIG. 14 in view of FIG. 1, fish tape drum 182); wherein at least one of the sidewalls (FIG. 14 in view of FIG. 1 and FIG. 22, first clamshell 190, which is clear plastic) of the case (FIG. 14 in view of FIG. 1, fish tape drum 182) is transparent to allow the luminescent material to be energized by light passing through the at least one of the sidewalls (FIG. 14 in view of FIG. 1 and FIG. 22, first clamshell

190, which is clear plastic as disclosed in paragraph [0076]) (For more details please read: Abstract; and paragraphs: [0047]-[0050] and [0066]-[0076]).

Miller et al. teaches all that is claimed as discussed above including fish tape (FIG. 14 in view of FIG. 1, fish tape 196) having a length extending from a first end (FIG. 14 in view of FIG. 1, moving end 218) to a second end (FIG. 14 in view of FIG. 1, anchor end, which is opposite of the moving end 218 and secured to the pin 266), but it does not specifically teach the following feature:

- The length of the fish tape comprising a luminescent material that emits light after being energized by exposure to a light source.

Farretta teaches a luminous snake comprising:

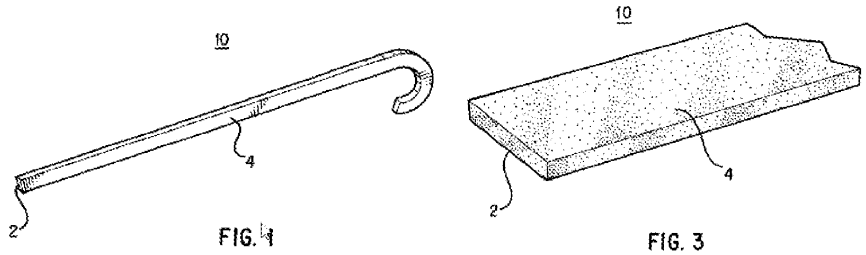

With regard to claims 1, 7 and 16, fish tape (FIG. 1, flexible core strip 2) comprising a luminescent material (FIG. 3 in view of FIG. 1, phosphorescent coating 4) that emits light after being energized by exposure to a light source (From page 9, line 31 to page 10, line 25).

Therefore, it would have been obvious to one having ordinary skill in the art before the effective filing date of the claimed invention to modify the fish tape assembly of Miller et al. to utilize a fish tape comprising a luminescent material that emits light after being energized by exposure to a light source as taught by Farretta since Farretta teaches that such an arrangement is beneficial to provide a fish tape assembly that is visible and easy to locate in the low light

environments of ducts, wall cavities and other passages used to house electrical wiring as disclosed in column 1, lines 8-13.

With regard to claims 2, 3, 8-10, 13, 18 and 19, as Miller et al. in view of Farretta teaches one of the sidewalls (FIG. 14 in view of FIG. 1 and FIG. 22, first clamshell 190, which is clear plastic) of the case (FIG. 14 in view of FIG. 1, fish tape drum 182) is transparent to allow the luminescent material to be energized by light passing through the at least one of the sidewalls, these claims do not appear to contain any additional features which, in combination with the features of any claim to which they refer, meet the requirements in respect of inventive step. The additional features of these claims relate to slight modifications in the fish tape assembly according to claims 1, 7 and 16 that lie in the scope of what someone skilled in the art is accustomed to performing based on well-known considerations common and commercially available to those skilled in the art. Therefore, it would be easy for a person skilled in the art to conceive of applying these features to the fish tape assembly of Miller et al. according to claims 1, 7 and 16 to take advantage of the physical property of the transparent material to allow the luminescent material to be energized by light passing through the walls.

With regard to claims 4, 11 and 20, Miller et al. teaches one of the sidewalls (FIG. 14 in view of FIG. 1 and FIG. 22, first clamshell 190, which is clear plastic) and portions of the innermost and outermost walls (FIG. 15 in view of FIG. 1, inner wall 258 and outer wall 262) are defined by a first component (FIG. 14 in view of FIG. 1, right half of the fish tape drum 182) of the case (FIG. 14 in view of FIG. 1, fish tape drum 182), and the other of the sidewalls (FIG. 14 in view of FIG. 1, second clamshell 194) and other portions of the innermost and outermost walls (FIG. 15 in view of FIG. 1, inner wall 258 and outer wall 262) are defined by a second component (FIG. 15 in view of FIG. 1, left half of the fish tape drum 182) of the case (FIG. 14 in

view of FIG. 1, fish tape drum 182), the first and second components being assembled together to form the storage compartment (FIG. 14 in view of FIG. 1, drum portion 186).

With regard to claims 5 and 14, Miller et al. teaches a handle (FIG. 1, handle 56) engaged with the case (FIG. 14 in view of FIG. 1, fish tape drum 182) for sliding movement along the circumference of the outer wall (FIG. 15 in view of FIG. 1, outer wall 262), the handle (FIG. 1, handle 56) engageable with the fish tape (FIG. 14 in view of FIG. 1, fish tape 196) to deploy the fish tape (FIG. 14 in view of FIG. 1, fish tape 196) from the storage compartment (FIG. 14 in view of FIG. 1, drum portion 186) and to reload the fish tape (FIG. 14 in view of FIG. 1, fish tape 196) into the compartment (FIG. 14 in view of FIG. 1, drum portion 186).

With regard to claims 6 and 15, Miller et al. discloses that the fish tape (FIG. 14 in view of FIG. 1, fish tape 196) comprises the first end (FIG. 14 in view of FIG. 1, moving end 218) to the second end (FIG. 14 in view of FIG. 1, anchor end, which is opposite of the moving end 218 and secured to the pin 266), wherein the anchor end (FIG. 30, anchor end 370) is a connector looped over the pin 266 and welded to itself at a weld point 374. It is noted that these claims do not appear to contain any additional features which, in combination with the features of any claim to which they refer, meet the requirements in respect of inventive step. The additional feature, “a threaded opening in at least one of the first and second ends”, of these claims relates to slight modifications of the connector at the second end (FIG. 14 in view of FIG. 1, anchor end, which is opposite of the moving end 218 and secured to the pin 266) according to claims 1, 7 and 16 that lie in the scope of what someone skilled in the art is accustomed to performing based on well-known considerations common and commercially available to those skilled in the art. Therefore, it would be easy for a person skilled in the art to conceive of applying this feature to the fish tape assembly of Miller et al. according to claims 1, 7 and 16 to take advantage of

desirable and exemplary choices for a specific configuration of a threaded opening in at least one of the first and second ends.

With regard to claim 12, at least one of the first and second components (FIG. 14 in view of FIG. 1, right half of the fish tape drum 182) comprises a transparent material (first clamshell 190 is clear plastic) (Paragraph: [0076]).

With regard to claim 17, the storage compartment (FIG. 14 in view of FIG. 1, drum portion 186) has an annular shape bounded by a pair of spaced sidewalls (FIG. 14 in view of FIG. 1, first and second clamshells 190 and 194).

Response to Arguments

6. Applicant's arguments filed September 8, 2022 have been fully considered but they are not persuasive.

It is noted that, the term "transparent" (transmitting light; able to be seen through with clarity: https://www.wordwebonline.com/search.pl?w=transparent) as recited in the rejected claims at issue was given its broadest reasonable interpretation of "clear" (allowing light to pass through: https://www.wordwebonline.com/search.pl?w=clear), which is common and consistent with the interpretation that those skilled in the art would reach.

In response to applicant's argument in the third paragraph at page 2 of 4 that "Contrary to this assertion, there is nothing in Miller et al. that even hints at a transparent sidewall, let alone teaches a transparent sidewall, let alone further teaches such a sidewall that allows a luminescent material to be energized by light passing through such a sidewall", the Examiner disagrees.

Miller et al. clearly discloses in paragraph [0076] and FIG. 14 in view of FIG. 22 that the first clamshell 190 of the fish tape drum 182 is a side wall and clear plastic, which reads on the

limitation "at least one of the sidewalls of the case is transparent to allow the luminescent material to be energized by light passing through the at least one of the sidewalls" as recited in the rejected claims at issue. In addition, it is advisable for the applicant to review the whole reference, not only the cited portions, to fully understand the cited structure.

In response to applicant's argument in the first paragraph at page 3 of 4 that "Because Miller et al. fails to disclose a transparent structure as recited in the claims, there is no support for a modification of Miller et al. by adding the luminescent material of Farretta", the Examiner disagrees.

As discussed right above, Miller et al. discloses a transparent structure (FIG. 14 in view of FIG. 22, first clamshell 190 , which is clear plastic (Paragraph: [0076])) as recited in the claims. Therefore, a modification of Miller et al. by adding the luminescent material that emits light after being energized by exposure to a light source as taught by Farretta is still deemed proper.

In response to applicant's argument in the second paragraph at page 3 of 4 that "Additionally, the rejection discusses a 'switching apparatus' structure that isn't recited in any of the rejected claims", the Examiner admits that the phrase "switching apparatus" has been inadvertently inserted in the passage. Therefore, the "switching apparatus" has been replaced with -- fish tape assembly -- in the rejection of claims 2, 3, 8-10, 13, 18 and 19.

In response to applicant's arguments in the second paragraph at page 3 of 4 that "Furthermore, to the extent the rejection attempts to address the structure recited in each of the rejected claims, the attempts are all based on the erroneous assertion that Miller et al. discloses a transparent sidewall" and "Accordingly, the rejection of claims 2, 3, 8-10, 13, 18 and 19 is improper and should be withdrawn", the Examiner disagrees.

As discussed right above, Miller et al. discloses a transparent structure (FIG. 14 in view of FIG. 22, first clamshell 190 , which is clear plastic (Paragraph: [0076])) as recited in the claims. Therefore, the rejection of claims 2, 3, 8-10, 13, 18 and 19 is still deemed improper.

In response to applicant's arguments in the last paragraph at page 3 of 4 that "Contrary to this assertion, the handle 56 of Miller et al. is not engageable with the fish tape, let alone engageable to deploy or reload the fish tape into a compartment as recited in the rejected claims", the Examiner disagrees.

Miller et al. clearly discloses in paragraph [0049] and FIG. 14 in view of FIGS. 1 and 2 that the handle 56 includes a trigger 58 for actuating the motor 18 and a directional shuttle 62 that can slide between a dispensing position and a retracting position such that the fish tape 32 is dispensed from and retracted into the fish tape drum 30, respectively. That is, the handle 56 is engageable with the fish tape 32 via the trigger 58, the motor 18 and the directional shuttle 62. Therefore, the combination of Miller et al. and Farretta is still deemed improper.

With regard to claims 2-6, 8-15 and 17-20, all of applicant's arguments are addressed by the above rejections.

Conclusion

7. **THIS ACTION IS MADE FINAL.** Applicant is reminded of the extension of time policy as set forth in 37 CFR 1.136(a).

A shortened statutory period for reply to this final action is set to expire THREE MONTHS from the mailing date of this action. In the event a first reply is filed within TWO MONTHS of the mailing date of this final action and the advisory action is not mailed until after the end of the THREE-MONTH shortened statutory period, then the shortened statutory period

will expire on the date the advisory action is mailed, and any extension fee pursuant to 37 CFR 1.136(a) will be calculated from the mailing date of the advisory action. In no event, however, will the statutory period for reply expire later than SIX MONTHS from the mailing date of this final action.

CONTACT INFORMATION

8. Any inquiry concerning this communication or earlier communications from the examiner should be directed to HOAI-AN D. NGUYEN whose telephone number is (571) 272-2170. The examiner can normally be reached MON-THURS (7:00 AM - 5:00 PM).

Examiner interviews are available via telephone, in-person, and video conferencing using a USPTO supplied web-based collaboration tool. To schedule an interview, applicant is encouraged to use the USPTO Automated Interview Request (AIR) at http://www.uspto.gov/interviewpractice.

If attempts to reach the examiner by telephone are unsuccessful, the examiner's supervisor, PATRICK J. ASSOUAD can be reached on 571-272-2210. The fax phone number for the organization where this application or proceeding is assigned is 571-273-8300.

Information regarding the status of published or unpublished applications may be obtained from Patent Center. Unpublished application information in Patent Center is available to registered users. To file and manage patent submissions in Patent Center, visit: https://patentcenter.uspto.gov. Visit https://www.uspto.gov/patents/apply/patent-center for more information about Patent Center and https://www.uspto.gov/patents/docx for information about filing in DOCX format. For additional questions, contact the Electronic Business Center (EBC)

at 866-217-9197 (toll-free). If you would like assistance from a USPTO Customer Service

Representative, call 800-786-9199 (IN USA OR CANADA) or 571-272-1000.

HOAI-AN D. NGUYEN
Primary Examiner
Art Unit 2858

/HOAI-AN D. NGUYEN/
Primary Examiner, Art Unit 2858

Search Notes	Application/Control No.	Applicant(s)/Patent Under Reexamination
	16/696,383	Pearson, Daniel R.
	Examiner	**Art Unit**
	HOAI-AN D NGUYEN	2858

CPC - Searched*		
Symbol	**Date**	**Examiner**
B65H75/00, 02, 34, 36, 362, 364, 38, 40, 406 (Updated).	09/19/2022	HADN
B65H2701/00, 30, 37, 376 (Updated).	09/19/2022	HADN
H02G11/00, 006, 02, 06, 08, 083, 085 (Updated).	09/19/2022	HADN

CPC Combination Sets - Searched*		
Symbol	**Date**	**Examiner**

US Classification - Searched*			
Class	**Subclass**	**Date**	**Examiner**
254	134.3R, 134.3FT (Updated).	05/31/2022	HADN

* See search history printout included with this form or the SEARCH NOTES box below to determine the scope of the search.

Search Notes		
Search Notes	**Date**	**Examiner**
Reviewed all previously searched prior art references.	09/19/2022	HADN
Inventor's name searched.	09/19/2022	HADN
Text search in PE2E SEARCH.	09/13/2022	HADN

Interference Search			
US Class/CPC Symbol	**US Subclass/CPC Group**	**Date**	**Examiner**
Interference Search History Printout.		09/19/2022	HADN

Milwaukee Electric Tool Corporation
Ex-1015
Page 159 of 237

Search Notes	Application/Control No.	Applicant(s)/Patent Under Reexamination
	16/696,383	Pearson, Daniel R.
	Examiner	**Art Unit**
	HOAI-AN D NGUYEN	2858

Index of Claims	Application/Control No.	Applicant(s)/Patent Under Reexamination
	16/696,383	Pearson, Daniel R.
	Examiner	**Art Unit**
	HOAI-AN D NGUYEN	2858

✓	Rejected	-	Cancelled	N	Non-Elected	A	Appeal
=	Allowed	÷	Restricted	I	Interference	O	Objected

CLAIMS

☐ Claims renumbered in the same order as presented by applicant ☐ CPA ☐ T.D. ☐ R.1.47

CLAIM		DATE								
Final	Original	09/20/2022								
	1	✓								
	2	✓								
	3	✓								
	4	✓								
	5	✓								
	6	✓								
	7	✓								
	8	✓								
	9	✓								
	10	✓								
	11	✓								
	12	✓								
	13	✓								
	14	✓								
	15	✓								
	16	✓								
	17	✓								
	18	✓								
	19	✓								
	20	✓								

PE2E SEARCH - Search History (Prior Art)

Ref #	Hits	Search Query	DBs	Default Operator	Plurals	British Equivalents	Time Stamp
L151	4	(B65H75/00.cpc.) AND @ad<"20191126" AND @pd>"20220531"	(US-PGPUB; USPAT; USOCR; FIT (AP, AT, AU, BE, BG, BR, BY, CA, CH, CN, CS, CU, CZ, DD, DE, DK, EA, EE, EP, ES, FI, FR, GB, HR, HU, ID, IE, IL, IS, IT, JP, KR, LT, LU, LV, MA, MC, MD, MY, NL, NO, NZ, OA, PH, PL, PT, RO, RS, RU, SE, SG, SI, SK, SU, TH, TN, TR, TW, UA, VN, WO); FPRS; EPO; JPO; DERWENT; IBM_TDB)	OR	ON	ON	2022/09/19 08:04 AM
L152	7	(B65H75/02.cpc.) AND @ad<"20191126" AND @pd>"20220531"	(US-PGPUB; USPAT; USOCR; FIT (AP, AT, AU, BE, BG, BR, BY, CA, CH, CN, CS, CU, CZ, DD, DE, DK, EA, EE, EP, ES, FI, FR, GB, HR, HU, ID, IE, IL, IS, IT, JP, KR, LT, LU, LV, MA, MC, MD, MY, NL, NO, NZ, OA, PH, PL, PT, RO, RS, RU, SE, SG, SI, SK, SU, TH, TN, TR, TW, UA, VN, WO); FPRS; EPO; JPO; DERWENT; IBM_TDB)	OR	ON	ON	2022/09/19 08:09 AM
L153	5	(B65H75/34.cpc.) AND @ad<"20191126" AND @pd>"20220531"	(US-PGPUB; USPAT; USOCR; FIT (AP, AT, AU, BE, BG, BR, BY, CA, CH, CN, CS, CU, CZ, DD, DE, DK, EA, EE, EP, ES, FI, FR, GB, HR, HU, ID, IE, IL, IS, IT, JP, KR, LT, LU, LV, MA, MC, MD, MY, NL, NO, NZ, OA, PH, PL, PT, RO, RS, RU, SE, SG, SI, SK, SU, TH, TN, TR, TW, UA, VN, WO); FPRS; EPO; JPO; DERWENT; IBM_TDB)	OR	ON	ON	2022/09/19 08:09 AM
L154	4	(B65H75/36.cpc.) AND @ad<"20191126" AND @pd>"20220531"	(US-PGPUB; USPAT; USOCR; FIT (AP, AT, AU, BE, BG, BR, BY, CA, CH, CN, CS, CU,	OR	ON	ON	2022/09/19 08:14 AM

			CZ, DD, DE, DK, EA, EE, EP, ES, FI, FR, GB, HR, HU, ID, IE, IL, IS, IT, JP, KR, LT, LU, LV, MA, MC, MD, MY, NL, NO, NZ, OA, PH, PL, PT, RO, RS, RU, SE, SG, SI, SK, SU, TH, TN, TR, TW, UA, VN, WO); FPRS; EPO; JPO; DERWENT; IBM_TDB)				
L155	2	(B65H75/362.cpc.) AND @ad<"20191126" AND @pd>"20220531"	(US-PGPUB; USPAT; USOCR; FIT (AP, AT, AU, BE, BG, BR, BY, CA, CH, CN, CS, CU, CZ, DD, DE, DK, EA, EE, EP, ES, FI, FR, GB, HR, HU, ID, IE, IL, IS, IT, JP, KR, LT, LU, LV, MA, MC, MD, MY, NL, NO, NZ, OA, PH, PL, PT, RO, RS, RU, SE, SG, SI, SK, SU, TH, TN, TR, TW, UA, VN, WO); FPRS; EPO; JPO; DERWENT; IBM_TDB)	OR	ON	ON	2022/09/19 08:21 AM
L156	10	(B65H75/364.cpc.) AND @ad<"20191126" AND @pd>"20220531"	(US-PGPUB; USPAT; USOCR; FIT (AP, AT, AU, BE, BG, BR, BY, CA, CH, CN, CS, CU, CZ, DD, DE, DK, EA, EE, EP, ES, FI, FR, GB, HR, HU, ID, IE, IL, IS, IT, JP, KR, LT, LU, LV, MA, MC, MD, MY, NL, NO, NZ, OA, PH, PL, PT, RO, RS, RU, SE, SG, SI, SK, SU, TH, TN, TR, TW, UA, VN, WO); FPRS; EPO; JPO; DERWENT; IBM_TDB)	OR	ON	ON	2022/09/19 08:22 AM
L157	13	(B65H75/38.cpc.) AND @ad<"20191126" AND @pd>"20220531"	(US-PGPUB; USPAT; USOCR; FIT (AP, AT, AU, BE, BG, BR, BY, CA, CH, CN, CS, CU, CZ, DD, DE, DK, EA, EE, EP, ES, FI, FR, GB, HR, HU, ID, IE, IL, IS, IT, JP, KR, LT, LU, LV, MA, MC, MD, MY, NL, NO, NZ, OA, PH, PL, PT, RO, RS, RU, SE, SG, SI, SK, SU, TH, TN, TR, TW, UA, VN,	OR	ON	ON	2022/09/19 08:26 AM

			WO); FPRS; EPO; JPO; DERWENT; IBM_TDB)				
L158	6	(B65H75/40.cpc.) AND @ad<"20191126" AND @pd>"20220531"	(US-PGPUB; USPAT; USOCR; FIT (AP, AT, AU, BE, BG, BR, BY, CA, CH, CN, CS, CU, CZ, DD, DE, DK, EA, EE, EP, ES, FI, FR, GB, HR, HU, ID, IE, IL, IS, IT, JP, KR, LT, LU, LV, MA, MC, MD, MY, NL, NO, NZ, OA, PH, PL, PT, RO, RS, RU, SE, SG, SI, SK, SU, TH, TN, TR, TW, UA, VN, WO); FPRS; EPO; JPO; DERWENT; IBM_TDB)	OR	ON	ON	2022/09/19 08:29 AM
L159	10	(B65H75/406.cpc.) AND @ad<"20191126" AND @pd>"20220531"	(US-PGPUB; USPAT; USOCR; FIT (AP, AT, AU, BE, BG, BR, BY, CA, CH, CN, CS, CU, CZ, DD, DE, DK, EA, EE, EP, ES, FI, FR, GB, HR, HU, ID, IE, IL, IS, IT, JP, KR, LT, LU, LV, MA, MC, MD, MY, NL, NO, NZ, OA, PH, PL, PT, RO, RS, RU, SE, SG, SI, SK, SU, TH, TN, TR, TW, UA, VN, WO); FPRS; EPO; JPO; DERWENT; IBM_TDB)	OR	ON	ON	2022/09/19 08:30 AM
L160	0	(B65H2701/00.cpc.) AND @ad<"20191126" AND @pd>"20220531"	(US-PGPUB; USPAT; USOCR; FIT (AP, AT, AU, BE, BG, BR, BY, CA, CH, CN, CS, CU, CZ, DD, DE, DK, EA, EE, EP, ES, FI, FR, GB, HR, HU, ID, IE, IL, IS, IT, JP, KR, LT, LU, LV, MA, MC, MD, MY, NL, NO, NZ, OA, PH, PL, PT, RO, RS, RU, SE, SG, SI, SK, SU, TH, TN, TR, TW, UA, VN, WO); FPRS; EPO; JPO; DERWENT; IBM_TDB)	OR	ON	ON	2022/09/19 08:33 AM
L161	9	(B65H2701/30.cpc.) AND @ad<"20191126" AND @pd>"20220531"	(US-PGPUB; USPAT; USOCR; FIT (AP, AT, AU, BE, BG, BR, BY, CA, CH, CN, CS, CU, CZ, DD, DE, DK, EA,	OR	ON	ON	2022/09/19 08:34 AM

			EE, EP, ES, FI, FR, GB, HR, HU, ID, IE, IL, IS, IT, JP, KR, LT, LU, LV, MA, MC, MD, MY, NL, NO, NZ, OA, PH, PL, PT, RO, RS, RU, SE, SG, SI, SK, SU, TH, TN, TR, TW, UA, VN, WO); FPRS; EPO; JPO; DERWENT; IBM_TDB)				
L162	13	(B65H2701/37.cpc.) AND @ad<"20191126" AND @pd>"20220531"	(US-PGPUB; USPAT; USOCR; FIT (AP, AT, AU, BE, BG, BR, BY, CA, CH, CN, CS, CU, CZ, DD, DE, DK, EA, EE, EP, ES, FI, FR, GB, HR, HU, ID, IE, IL, IS, IT, JP, KR, LT, LU, LV, MA, MC, MD, MY, NL, NO, NZ, OA, PH, PL, PT, RO, RS, RU, SE, SG, SI, SK, SU, TH, TN, TR, TW, UA, VN, WO); FPRS; EPO; JPO; DERWENT; IBM_TDB)	OR	ON	ON	2022/09/19 08:39 AM
L163	3	(B65H2701/376.cpc.) AND @ad<"20191126" AND @pd>"20220531"	(US-PGPUB; USPAT; USOCR; FIT (AP, AT, AU, BE, BG, BR, BY, CA, CH, CN, CS, CU, CZ, DD, DE, DK, EA, EE, EP, ES, FI, FR, GB, HR, HU, ID, IE, IL, IS, IT, JP, KR, LT, LU, LV, MA, MC, MD, MY, NL, NO, NZ, OA, PH, PL, PT, RO, RS, RU, SE, SG, SI, SK, SU, TH, TN, TR, TW, UA, VN, WO); FPRS; EPO; JPO; DERWENT; IBM_TDB)	OR	ON	ON	2022/09/19 08:56 AM
L164	58	(H02G11/00.cpc.) AND @ad<"20191126" AND @pd>"20220531"	(US-PGPUB; USPAT; USOCR; FIT (AP, AT, AU, BE, BG, BR, BY, CA, CH, CN, CS, CU, CZ, DD, DE, DK, EA, EE, EP, ES, FI, FR, GB, HR, HU, ID, IE, IL, IS, IT, JP, KR, LT, LU, LV, MA, MC, MD, MY, NL, NO, NZ, OA, PH, PL, PT, RO, RS, RU, SE, SG, SI, SK, SU, TH, TN, TR, TW, UA, VN, WO); FPRS; EPO;	OR	ON	ON	2022/09/19 08:58 AM

			JPO; DERWENT; IBM_TDB)				
L165	29	(H02G11/006.cpc.) AND @ad<"20191126" AND @pd>"20220531"	(US-PGPUB; USPAT; USOCR; FIT (AP, AT, AU, BE, BG, BR, BY, CA, CH, CN, CS, CU, CZ, DD, DE, DK, EA, EE, EP, ES, FI, FR, GB, HR, HU, ID, IE, IL, IS, IT, JP, KR, LT, LU, LV, MA, MC, MD, MY, NL, NO, NZ, OA, PH, PL, PT, RO, RS, RU, SE, SG, SI, SK, SU, TH, TN, TR, TW, UA, VN, WO); FPRS; EPO; JPO; DERWENT; IBM_TDB)	OR	ON	ON	2022/09/19 08:59 AM
L166	40	(H02G11/02.cpc.) AND @ad<"20191126" AND @pd>"20220531"	(US-PGPUB; USPAT; USOCR; FIT (AP, AT, AU, BE, BG, BR, BY, CA, CH, CN, CS, CU, CZ, DD, DE, DK, EA, EE, EP, ES, FI, FR, GB, HR, HU, ID, IE, IL, IS, IT, JP, KR, LT, LU, LV, MA, MC, MD, MY, NL, NO, NZ, OA, PH, PL, PT, RO, RS, RU, SE, SG, SI, SK, SU, TH, TN, TR, TW, UA, VN, WO); FPRS; EPO; JPO; DERWENT; IBM_TDB)	OR	ON	ON	2022/09/19 09:30 AM
L167	0	(H02G11/06.cpc.) AND @ad<"20191126" AND @pd>"20220531"	(US-PGPUB; USPAT; USOCR; FIT (AP, AT, AU, BE, BG, BR, BY, CA, CH, CN, CS, CU, CZ, DD, DE, DK, EA, EE, EP, ES, FI, FR, GB, HR, HU, ID, IE, IL, IS, IT, JP, KR, LT, LU, LV, MA, MC, MD, MY, NL, NO, NZ, OA, PH, PL, PT, RO, RS, RU, SE, SG, SI, SK, SU, TH, TN, TR, TW, UA, VN, WO); FPRS; EPO; JPO; DERWENT; IBM_TDB)	OR	ON	ON	2022/09/19 09:31 AM
L168	0	(H02G11/08.cpc.) AND @ad<"20191126" AND @pd>"20220531"	(US-PGPUB; USPAT; USOCR; FIT (AP, AT, AU, BE, BG, BR, BY, CA, CH, CN, CS, CU, CZ, DD, DE, DK, EA, EE, EP, ES, FI, FR, GB,	OR	ON	ON	2022/09/19 09:32 AM

			HR, HU, ID, IE, IL, IS, IT, JP, KR, LT, LU, LV, MA, MC, MD, MY, NL, NO, NZ, OA, PH, PL, PT, RO, RS, RU, SE, SG, SI, SK, SU, TH, TN, TR, TW, UA, VN, WO); FPRS; EPO; JPO; DERWENT; IBM_TDB)				
L169	0	(H02G11/083.cpc.) AND @ad<"20191126" AND @pd>"20220531"	(US-PGPUB; USPAT; USOCR; FIT (AP, AT, AU, BE, BG, BR, BY, CA, CH, CN, CS, CU, CZ, DD, DE, DK, EA, EE, EP, ES, FI, FR, GB, HR, HU, ID, IE, IL, IS, IT, JP, KR, LT, LU, LV, MA, MC, MD, MY, NL, NO, NZ, OA, PH, PL, PT, RO, RS, RU, SE, SG, SI, SK, SU, TH, TN, TR, TW, UA, VN, WO); FPRS; EPO; JPO; DERWENT; IBM_TDB)	OR	ON	ON	2022/09/19 09:41 AM
L170	0	(H02G11/085.cpc.) AND @ad<"20191126" AND @pd>"20220531"	(US-PGPUB; USPAT; USOCR; FIT (AP, AT, AU, BE, BG, BR, BY, CA, CH, CN, CS, CU, CZ, DD, DE, DK, EA, EE, EP, ES, FI, FR, GB, HR, HU, ID, IE, IL, IS, IT, JP, KR, LT, LU, LV, MA, MC, MD, MY, NL, NO, NZ, OA, PH, PL, PT, RO, RS, RU, SE, SG, SI, SK, SU, TH, TN, TR, TW, UA, VN, WO); FPRS; EPO; JPO; DERWENT; IBM_TDB)	OR	ON	ON	2022/09/19 09:42 AM
L171	0	(254/134.3R.ccls.) AND @ad<"20191126" AND @pd>"20220531"	(US-PGPUB; USPAT; USOCR; FIT (AP, AT, AU, BE, BG, BR, BY, CA, CH, CN, CS, CU, CZ, DD, DE, DK, EA, EE, EP, ES, FI, FR, GB, HR, HU, ID, IE, IL, IS, IT, JP, KR, LT, LU, LV, MA, MC, MD, MY, NL, NO, NZ, OA, PH, PL, PT, RO, RS, RU, SE, SG, SI, SK, SU, TH, TN, TR, TW, UA, VN, WO); FPRS; EPO; JPO; DERWENT;	OR	ON	ON	2022/09/19 09:52 AM

			IBM_TDB)				
L172	0	(254/134.FT.ccls.) AND @ad<"20191126" AND @pd>"20220531"	(US-PGPUB; USPAT; USOCR; FIT (AP, AT, AU, BE, BG, BR, BY, CA, CH, CN, CS, CU, CZ, DD, DE, DK, EA, EE, EP, ES, FI, FR, GB, HR, HU, ID, IE, IL, IS, IT, JP, KR, LT, LU, LV, MA, MC, MD, MY, NL, NO, NZ, OA, PH, PL, PT, RO, RS, RU, SE, SG, SI, SK, SU, TH, TN, TR, TW, UA, VN, WO); FPRS; EPO; JPO; DERWENT; IBM_TDB)	OR	ON	ON	2022/09/19 09:53 AM
L173	321	(Pearson near2 Daniel).inv.	(US-PGPUB; USPAT; USOCR; FIT (AP, AT, AU, BE, BG, BR, BY, CA, CH, CN, CS, CU, CZ, DD, DE, DK, EA, EE, EP, ES, FI, FR, GB, HR, HU, ID, IE, IL, IS, IT, JP, KR, LT, LU, LV, MA, MC, MD, MY, NL, NO, NZ, OA, PH, PL, PT, RO, RS, RU, SE, SG, SI, SK, SU, TH, TN, TR, TW, UA, VN, WO); FPRS; EPO; JPO; DERWENT; IBM_TDB)	OR	ON	ON	2022/09/19 02:57 PM
L174	0	(L151 L152 L153 L154 L155 L156 L157 L158 L159) AND (((fish flex$3) adj2 tape) WITH (length size dimension width range distance) WITH (first adj2 (end$3 terminal point node location)) WITH (second adj2 (end$3 terminal point node location)))	(US-PGPUB; USPAT; USOCR; FIT (AP, AT, AU, BE, BG, BR, BY, CA, CH, CN, CS, CU, CZ, DD, DE, DK, EA, EE, EP, ES, FI, FR, GB, HR, HU, ID, IE, IL, IS, IT, JP, KR, LT, LU, LV, MA, MC, MD, MY, NL, NO, NZ, OA, PH, PL, PT, RO, RS, RU, SE, SG, SI, SK, SU, TH, TN, TR, TW, UA, VN, WO); FPRS; EPO; JPO; DERWENT; IBM_TDB)	OR	ON	ON	2022/09/19 03:04 PM
L175	0	(L161 L162 L163) AND (((fish flex$3) adj2 tape) WITH (length size dimension width range distance) WITH (first adj2 (end$3 terminal point node location))	(US-PGPUB; USPAT; USOCR; FIT (AP, AT, AU, BE, BG, BR, BY, CA, CH, CN, CS, CU, CZ, DD, DE, DK, EA, EE, EP, ES, FI, FR, GB, HR, HU, ID, IE, IL, IS,	OR	ON	ON	2022/09/19 03:05 PM

		WITH (second adj2 (end$3 terminal point node location)))	IT, JP, KR, LT, LU, LV, MA, MC, MD, MY, NL, NO, NZ, OA, PH, PL, PT, RO, RS, RU, SE, SG, SI, SK, SU, TH, TN, TR, TW, UA, VN, WO); FPRS; EPO; JPO; DERWENT; IBM_TDB)				
L176	0	(L164 L165 L166) AND (((fish flex$3) adj2 tape) WITH (length size dimension width range distance) WITH (first adj2 (end$3 terminal point node location)) WITH (second adj2 (end$3 terminal point node location)))	(US-PGPUB; USPAT; USOCR; FIT (AP, AT, AU, BE, BG, BR, BY, CA, CH, CN, CS, CU, CZ, DD, DE, DK, EA, EE, EP, ES, FI, FR, GB, HR, HU, ID, IE, IL, IS, IT, JP, KR, LT, LU, LV, MA, MC, MD, MY, NL, NO, NZ, OA, PH, PL, PT, RO, RS, RU, SE, SG, SI, SK, SU, TH, TN, TR, TW, UA, VN, WO); FPRS; EPO; JPO; DERWENT; IBM_TDB)	OR	ON	ON	2022/09/19 03:06 PM
L177	4	L173 AND (((fish flex$3) adj2 tape) WITH (length size dimension width range distance) WITH (first adj2 (end$3 terminal point node location)) WITH (second adj2 (end$3 terminal point node location)))	(US-PGPUB; USPAT; USOCR; FIT (AP, AT, AU, BE, BG, BR, BY, CA, CH, CN, CS, CU, CZ, DD, DE, DK, EA, EE, EP, ES, FI, FR, GB, HR, HU, ID, IE, IL, IS, IT, JP, KR, LT, LU, LV, MA, MC, MD, MY, NL, NO, NZ, OA, PH, PL, PT, RO, RS, RU, SE, SG, SI, SK, SU, TH, TN, TR, TW, UA, VN, WO); FPRS; EPO; JPO; DERWENT; IBM_TDB)	OR	ON	ON	2022/09/19 03:07 PM
L178	0	(L151 L152 L153 L154 L155 L156 L157 L158 L159) AND ((sidewall sidebore bore wall) WITH (clear transparent crystal) WITH (luminescent adj2 (material substance media medium substrate sheet film micro$1film seal$3 coat$3 protect$3 layer pad wafer lamina plane cover screen compound)) WITH light)	(US-PGPUB; USPAT; USOCR; FIT (AP, AT, AU, BE, BG, BR, BY, CA, CH, CN, CS, CU, CZ, DD, DE, DK, EA, EE, EP, ES, FI, FR, GB, HR, HU, ID, IE, IL, IS, IT, JP, KR, LT, LU, LV, MA, MC, MD, MY, NL, NO, NZ, OA, PH, PL, PT, RO, RS, RU, SE, SG, SI, SK, SU, TH, TN, TR, TW, UA, VN, WO); FPRS; EPO; JPO; DERWENT; IBM_TDB)	OR	ON	ON	2022/09/19 03:11 PM

L179	0	(L161 L162 L163) AND ((sidewall sidebore bore wall) WITH (clear transparent crystal) WITH (luminescent adj2 (material substance media medium substrate sheet film micro$1film seal$3 coat$3 protect$3 layer pad wafer lamina plane cover screen compound)) WITH light)	(US-PGPUB; USPAT; USOCR; FIT (AP, AT, AU, BE, BG, BR, BY, CA, CH, CN, CS, CU, CZ, DD, DE, DK, EA, EE, EP, ES, FI, FR, GB, HR, HU, ID, IE, IL, IS, IT, JP, KR, LT, LU, LV, MA, MC, MD, MY, NL, NO, NZ, OA, PH, PL, PT, RO, RS, RU, SE, SG, SI, SK, SU, TH, TN, TR, TW, UA, VN, WO); FPRS; EPO; JPO; DERWENT; IBM_TDB)	OR	ON	ON	2022/09/19 03:12 PM
L180	0	(L164 L165 L166) AND ((sidewall sidebore bore wall) WITH (clear transparent crystal) WITH (luminescent adj2 (material substance media medium substrate sheet film micro$1film seal$3 coat$3 protect$3 layer pad wafer lamina plane cover screen compound)) WITH light)	(US-PGPUB; USPAT; USOCR; FIT (AP, AT, AU, BE, BG, BR, BY, CA, CH, CN, CS, CU, CZ, DD, DE, DK, EA, EE, EP, ES, FI, FR, GB, HR, HU, ID, IE, IL, IS, IT, JP, KR, LT, LU, LV, MA, MC, MD, MY, NL, NO, NZ, OA, PH, PL, PT, RO, RS, RU, SE, SG, SI, SK, SU, TH, TN, TR, TW, UA, VN, WO); FPRS; EPO; JPO; DERWENT; IBM_TDB)	OR	ON	ON	2022/09/19 03:13 PM
L181	3	L177 AND ((sidewall sidebore bore wall) WITH (clear transparent crystal) WITH (luminescent adj2 (material substance media medium substrate sheet film micro$1film seal$3 coat$3 protect$3 layer pad wafer lamina plane cover screen compound)) WITH light)	(US-PGPUB; USPAT; USOCR; FIT (AP, AT, AU, BE, BG, BR, BY, CA, CH, CN, CS, CU, CZ, DD, DE, DK, EA, EE, EP, ES, FI, FR, GB, HR, HU, ID, IE, IL, IS, IT, JP, KR, LT, LU, LV, MA, MC, MD, MY, NL, NO, NZ, OA, PH, PL, PT, RO, RS, RU, SE, SG, SI, SK, SU, TH, TN, TR, TW, UA, VN, WO); FPRS; EPO; JPO; DERWENT; IBM_TDB)	OR	ON	ON	2022/09/19 03:13 PM
L182	0	(L151 L152 L153 L154 L155 L156 L157 L158 L159) AND (((donut ring circle doughnut annulus circular annular) adj2 (frame fixture structure form shap$3 enclose receptacle container	(US-PGPUB; USPAT; USOCR; FIT (AP, AT, AU, BE, BG, BR, BY, CA, CH, CN, CS, CU, CZ, DD, DE, DK, EA, EE, EP, ES, FI, FR, GB, HR, HU, ID, IE, IL, IS, IT, JP, KR, LT, LU, LV, MA, MC, MD, MY, NL,	OR	ON	ON	2022/09/19 03:14 PM

		holder reservoir enclosure infrastructure chassis housing house framework shell chamber tank envelope box case tube cassette socket body cavity)) WITH (sidewall sidebore bore wall) WITH radial$2 WITH (hole opening aperture orifice outlet entrance port recess window through thru) WITH (circumference perimeter border borderline (boundary adj2 line) delimitation))	NO, NZ, OA, PH, PL, PT, RO, RS, RU, SE, SG, SI, SK, SU, TH, TN, TR, TW, UA, VN, WO); FPRS; EPO; JPO; DERWENT; IBM_TDB)				
L183	0	(L161 L162 L163) AND (((donut ring circle doughnut annulus circular annular) adj2 (frame fixture structure form shap$3 enclose receptacle container holder reservoir enclosure infrastructure chassis housing house framework shell chamber tank envelope box case tube cassette socket body cavity)) WITH (sidewall sidebore bore wall) WITH radial$2 WITH (hole opening aperture orifice outlet entrance port recess window through thru) WITH (circumference perimeter border borderline (boundary adj2 line) delimitation))	(US-PGPUB; USPAT; USOCR; FIT (AP, AT, AU, BE, BG, BR, BY, CA, CH, CN, CS, CU, CZ, DD, DE, DK, EA, EE, EP, ES, FI, FR, GB, HR, HU, ID, IE, IL, IS, IT, JP, KR, LT, LU, LV, MA, MC, MD, MY, NL, NO, NZ, OA, PH, PL, PT, RO, RS, RU, SE, SG, SI, SK, SU, TH, TN, TR, TW, UA, VN, WO); FPRS; EPO; JPO; DERWENT; IBM_TDB)	OR	ON	ON	2022/09/19 03:15 PM
L184	0	(L164 L165 L166) AND (((donut ring circle doughnut annulus circular annular) adj2 (frame fixture structure form shap$3 enclose receptacle container holder reservoir enclosure infrastructure chassis housing house framework shell chamber tank envelope box case tube cassette socket body cavity))	(US-PGPUB; USPAT; USOCR; FIT (AP, AT, AU, BE, BG, BR, BY, CA, CH, CN, CS, CU, CZ, DD, DE, DK, EA, EE, EP, ES, FI, FR, GB, HR, HU, ID, IE, IL, IS, IT, JP, KR, LT, LU, LV, MA, MC, MD, MY, NL, NO, NZ, OA, PH, PL, PT, RO, RS, RU, SE, SG, SI, SK, SU, TH, TN, TR, TW, UA, VN, WO); FPRS; EPO;	OR	ON	ON	2022/09/19 03:15 PM

		WITH (sidewall sidebore bore wall) WITH radial$2 WITH (hole opening aperture orifice outlet entrance port recess window through thru) WITH (circumference perimeter border borderline (boundary adj2 line) delimitation))	JPO; DERWENT; IBM_TDB)				
L185	3	L181 AND (((donut ring circle doughnut annulus circular annular) adj2 (frame fixture structure form shap$3 enclose receptacle container holder reservoir enclosure infrastructure chassis housing house framework shell chamber tank envelope box case tube cassette socket body cavity)) WITH (sidewall sidebore bore wall) WITH radial$2 WITH (hole opening aperture orifice outlet entrance port recess window through thru) WITH (circumference perimeter border borderline (boundary adj2 line) delimitation))	(US-PGPUB; USPAT; USOCR; FIT (AP, AT, AU, BE, BG, BR, BY, CA, CH, CN, CS, CU, CZ, DD, DE, DK, EA, EE, EP, ES, FI, FR, GB, HR, HU, ID, IE, IL, IS, IT, JP, KR, LT, LU, LV, MA, MC, MD, MY, NL, NO, NZ, OA, PH, PL, PT, RO, RS, RU, SE, SG, SI, SK, SU, TH, TN, TR, TW, UA, VN, WO); FPRS; EPO; JPO; DERWENT; IBM_TDB)	OR	ON	ON	2022/09/19 03:15 PM
L186	0	(((fish flex$3) adj2 tape) WITH (length size dimension width range distance) WITH (first adj2 (end$3 terminal point node location)) WITH (second adj2 (end$3 terminal point node location))) AND @ad<"20191126" AND @pd>"20220531"	(US-PGPUB; USPAT; USOCR; FIT (AP, AT, AU, BE, BG, BR, BY, CA, CH, CN, CS, CU, CZ, DD, DE, DK, EA, EE, EP, ES, FI, FR, GB, HR, HU, ID, IE, IL, IS, IT, JP, KR, LT, LU, LV, MA, MC, MD, MY, NL, NO, NZ, OA, PH, PL, PT, RO, RS, RU, SE, SG, SI, SK, SU, TH, TN, TR, TW, UA, VN, WO); FPRS; EPO; JPO; DERWENT; IBM_TDB)	OR	ON	ON	2022/09/19 03:30 PM
L187	5	((sidewall sidebore bore wall) WITH (clear transparent crystal) WITH (luminescent adj2 (material substance media medium	(US-PGPUB; USPAT; USOCR; FIT (AP, AT, AU, BE, BG, BR, BY, CA, CH, CN, CS, CU, CZ, DD, DE, DK, EA, EE, EP, ES, FI, FR, GB,	OR	ON	ON	2022/09/19 03:30 PM

		substrate sheet film micro$1film seal$3 coat$3 protect$3 layer pad wafer lamina plane cover screen compound)) WITH light) AND @ad<"20191126" AND @pd>"20220531"	HR, HU, ID, IE, IL, IS, IT, JP, KR, LT, LU, LV, MA, MC, MD, MY, NL, NO, NZ, OA, PH, PL, PT, RO, RS, RU, SE, SG, SI, SK, SU, TH, TN, TR, TW, UA, VN, WO); FPRS; EPO; JPO; DERWENT; IBM_TDB)				
L188	9	(((donut ring circle doughnut annulus circular annular) adj2 (frame fixture structure form shap$3 enclose receptacle container holder reservoir enclosure infrastructure chassis housing house framework shell chamber tank envelope box case tube cassette socket body cavity)) WITH (sidewall sidebore bore wall) WITH radial$2 WITH (hole opening aperture orifice outlet entrance port recess window through thru) WITH (circumference perimeter border borderline (boundary adj2 line) delimitation)) AND @ad<"20191126" AND @pd>"20220531"	(US-PGPUB; USPAT; USOCR; FIT (AP, AT, AU, BE, BG, BR, BY, CA, CH, CN, CS, CU, CZ, DD, DE, DK, EA, EE, EP, ES, FI, FR, GB, HR, HU, ID, IE, IL, IS, IT, JP, KR, LT, LU, LV, MA, MC, MD, MY, NL, NO, NZ, OA, PH, PL, PT, RO, RS, RU, SE, SG, SI, SK, SU, TH, TN, TR, TW, UA, VN, WO); FPRS; EPO; JPO; DERWENT; IBM_TDB)	OR	ON	ON	2022/09/19 03:31 PM
L189	0	L187 AND L188	(US-PGPUB; USPAT; USOCR; FIT (AP, AT, AU, BE, BG, BR, BY, CA, CH, CN, CS, CU, CZ, DD, DE, DK, EA, EE, EP, ES, FI, FR, GB, HR, HU, ID, IE, IL, IS, IT, JP, KR, LT, LU, LV, MA, MC, MD, MY, NL, NO, NZ, OA, PH, PL, PT, RO, RS, RU, SE, SG, SI, SK, SU, TH, TN, TR, TW, UA, VN, WO); FPRS; EPO; JPO; DERWENT; IBM_TDB)	OR	ON	ON	2022/09/19 03:37 PM

PE2E SEARCH - Search History (Interference)

Ref #	Hits	Search Query	DBs	Default Operator	Plurals	British Equivalents	Time Stamp

N15	1	((((fish flex$3) adj2 tape) WITH (length size dimension width range distance) WITH (first adj2 (end$3 terminal point node location)) WITH (second adj2 (end$3 terminal point node location))).clm.) AND @pd>"20220531"	(US-PGPUB; USPAT)	OR	ON	ON	2022/09/19 03:37 PM
N16	5	((((donut ring circle doughnut annulus circular annular) adj2 (frame fixture structure form shap$3 enclose receptacle container holder reservoir enclosure infrastructure chassis housing house framework shell chamber tank envelope box case tube cassette socket body cavity)) WITH (sidewall sidebore bore wall) WITH radial$2 WITH (hole opening aperture orifice outlet entrance port recess window through thru) WITH (circumference perimeter border borderline (boundary adj2 line) delimitation)).clm.) AND @pd>"20220531"	(US-PGPUB; USPAT)	OR	ON	ON	2022/09/19 03:38 PM
N17	0	(((sidewall sidebore bore wall) WITH (clear transparent crystal) WITH (luminescent adj2 (material substance media medium substrate sheet film micro$1film seal$3 coat$3 protect$3 layer pad wafer lamina plane cover screen compound)) WITH light).clm.) AND @pd>"20220531"	(US-PGPUB; USPAT)	OR	ON	ON	2022/09/19 03:38 PM
N18	0	N15 AND N16	(US-PGPUB; USPAT)	OR	ON	ON	2022/09/19 03:40 PM

PTO/SB/06 (09-11)
Approved for use through 1/31/2014. OMB 0651-0032
U.S. Patent and Trademark Office; U.S. DEPARTMENT OF COMMERCE
Under the Paperwork Reduction Act of 1995, no persons are required to respond to a collection of information unless it displays a valid OMB control number.

PATENT APPLICATION FEE DETERMINATION RECORD Substitute for Form PTO-875	Application or Docket Number 16/696,383	Filing Date 11/26/2019	☐ To be Mailed

ENTITY: ☑ LARGE ☐ SMALL ☐ MICRO

APPLICATION AS FILED - PART I

FOR	(Column 1) NUMBER FILED	(Column 2) NUMBER EXTRA		RATE ($)	FEE ($)
☐ BASIC FEE (37 CFR 1.16(a), (b), or (c))	N/A	N/A		N/A	
☐ SEARCH FEE (37 CFR 1.16(k), (i), or (m))	N/A	N/A		N/A	
☐ EXAMINATION FEE (37 CFR 1.16(o), (p), or (q))	N/A	N/A		N/A	
TOTAL CLAIMS (37 CFR 1.16(i))	minus 20 =	*		x $100 =	
INDEPENDENT CLAIMS (37 CFR 1.16(h))	minus 3 =	*		x $460 =	
☐ APPLICATION SIZE FEE (37 CFR 1.16(s))	If the specification and drawings exceed 100 sheets of paper, the application size fee due is $310 ($155 for small entity) for each additional 50 sheets or fraction thereof. See 35 U.S.C. 41(a)(1)(G) and 37 CFR 1.16(s).				
☐ MULTIPLE DEPENDENT CLAIM PRESENT (37 CFR 1.16(j))					
* If the difference in column 1 is less than zero, enter "0" in column 2.				TOTAL	

APPLICATION AS AMENDED - PART II

AMENDMENT	02/27/2023	(Column 1) CLAIMS REMAINING AFTER AMENDMENT		(Column 2) HIGHEST NUMBER PREVIOUSLY PAID FOR	(Column 3) PRESENT EXTRA		RATE ($)	ADDITIONAL FEE ($)
	Total (37 CFR 1.16(i))	* 18	Minus	** 20	= 0		x $100 =	0
	Independent (37 CFR 1.16(h))	* 3	Minus	*** 3	= 0		x $480 =	0
	☐ Application Size Fee (37 CFR 1.16(s))							
	☐ FIRST PRESENTATION OF MULTIPLE DEPENDENT CLAIM (37 CFR 1.16(j))							
							TOTAL ADD'L FEE	0

AMENDMENT		(Column 1) CLAIMS REMAINING AFTER AMENDMENT		(Column 2) HIGHEST NUMBER PREVIOUSLY PAID FOR	(Column 3) PRESENT EXTRA		RATE ($)	ADDITIONAL FEE ($)
	Total (37 CFR 1.16(i))	*	Minus	**	=		x $0 =	
	Independent (37 CFR 1.16(h))	*	Minus	***	=		x $0 =	
	☐ Application Size Fee (37 CFR 1.16(s))							
	☐ FIRST PRESENTATION OF MULTIPLE DEPENDENT CLAIM (37 CFR 1.16(j))							
							TOTAL ADD'L FEE	

* If the entry in column 1 is less than the entry in column 2, write "0" in column 3.	LIE
** If the "Highest Number Previously Paid For" IN THIS SPACE is less than 20, enter "20".	/ANITA JOHNSON/
*** If the "Highest Number Previously Paid For" IN THIS SPACE is less than 3, enter "3".	
The "Highest Number Previously Paid For" (Total or Independent) is the highest number found in the appropriate box in column 1.	

This collection of information is required by 37 CFR 1.16. The information is required to obtain or retain a benefit by the public which is to file (and by the USPTO to process) an application. Confidentiality is governed by 35 U.S.C. 122 and 37 CFR 1.14. This collection is estimated to take 12 minutes to complete, including gathering, preparing, and submitting the completed application form to the USPTO. Time will vary depending upon the individual case. Any comments on the amount of time you require to complete this form and/or suggestions for reducing this burden, should be sent to the Chief Information Officer, U.S. Patent and Trademark Office, U.S. Department of Commerce, P.O. Box 1450, Alexandria, VA 22313-1450. DO NOT SEND FEES OR COMPLETED FORMS TO THIS ADDRESS. **SEND TO: Commissioner for Patents, P.O. Box 1450, Alexandria, VA 22313-1450.**

If you need assistance in completing the form, call 1-800-PTO-9199 and select option 2.

Doc code: RCEX
Doc description: Request for Continued Examination (RCE)

PTO/SB/30EFS (07-09)
Approved for use through 07/31/2012. OMB 0651-0031
U.S. Patent and Trademark Office; U.S. DEPARTMENT OF COMMERCE
Under the Paperwork Reduction Act of 1995, no persons are required to respond to a collection of information unless it contains a valid OMB control number.

REQUEST FOR CONTINUED EXAMINATION(RCE)TRANSMITTAL
(Submitted Only via EFS-Web)

Application Number	16/696,383	Filing Date	11/26/2019	Docket Number (if applicable)	751391	Art Unit	2858
First Named Inventor	Daniel R. Pearson			Examiner Name	Nguyen, Hoai An D		

This is a Request for Continued Examination (RCE) under 37 CFR 1.114 of the above-identified application.
Request for Continued Examination (RCE) practice under 37 CFR 1.114 does not apply to any utility or plant application filed prior to June 8, 1995, or to any design application. The Instruction Sheet for this form is located at WWW.USPTO.GOV

SUBMISSION REQUIRED UNDER 37 CFR 1.114

Note: If the RCE is proper, any previously filed unentered amendments and amendments enclosed with the RCE will be entered in the order in which they were filed unless applicant instructs otherwise. If applicant does not wish to have any previously filed unentered amendment(s) entered, applicant must request non-entry of such amendment(s).

☐ Previously submitted. If a final Office action is outstanding, any amendments filed after the final Office action may be considered as a submission even if this box is not checked.

- ☐ Consider the arguments in the Appeal Brief or Reply Brief previously filed on _____
- ☐ Other _____

☒ Enclosed

- ☒ Amendment/Reply
- ☐ Information Disclosure Statement (IDS)
- ☐ Affidavit(s)/ Declaration(s)
- ☒ Other Petition for Extension of time

MISCELLANEOUS

☐ Suspension of action on the above-identified application is requested under 37 CFR 1.103(c) for a period of months _____ (Period of suspension shall not exceed 3 months; Fee under 37 CFR 1.17(i) required)

☐ Other _____

FEES

☒ **The RCE fee under 37 CFR 1.17(e) is required by 37 CFR 1.114 when the RCE is filed.**
The Director is hereby authorized to charge any underpayment of fees, or credit any overpayments, to Deposit Account No _____

SIGNATURE OF APPLICANT, ATTORNEY, OR AGENT REQUIRED

☒ Patent Practitioner Signature
☐ Applicant Signature

EFS - Web 2.1.15

PTO/SB/30EFS (07-09)
Approved for use through 07/31/2012. OMB 0651-0031
U.S. Patent and Trademark Office; U.S. DEPARTMENT OF COMMERCE

Under the Paperwork Reduction Act of 1995, no persons are required to respond to a collection of information unless it contains a valid OMB control number.

Signature of Registered U.S. Patent Practitioner			
Signature	Jeffery Fairchild	Date (YYYY-MM-DD)	2/27/2023
Name	Jeffery Fairchild	Registration Number	37825

This collection of information is required by 37 CFR 1.114. The information is required to obtain or retain a benefit by the public which is to file (and by the USPTO to process) an application. Confidentiality is governed by 35 U.S.C. 122 and 37 CFR 1.11 and 1.14. This collection is estimated to take 12 minutes to complete, including gathering, preparing, and submitting the completed application form to the USPTO. Time will vary depending upon the individual case. Any comments on the amount of time you require to complete this form and/or suggestions for reducing this burden, should be sent to the Chief Information Officer, U.S. Patent and Trademark Office, U.S. Department of Commerce, P.O. Box 1450, Alexandria, VA 22313-1450.

If you need assistance in completing the form, call 1-800-PTO-9199 and select option 2.

Electronic Patent Application Fee Transmittal

Application Number:	16696383
Filing Date:	26-Nov-2019
Title of Invention:	GLOW FISH TAPE SYSTEM
First Named Inventor/Applicant Name:	Daniel R. Pearson
Filer:	Jeffery Neal Fairchild
Attorney Docket Number:	751391

Filed as Large Entity

Filing Fees for **Utility under 35 USC 111(a)**

Description	Fee Code	Quantity	Amount	Sub-Total in USD($)
Basic Filing:				
Pages:				
Claims:				
Miscellaneous-Filing:				
Petition:				
Patent-Appeals-and-Interference:				
Post-Allowance-and-Post-Issuance:				
Extension-of-Time:				

Description	Fee Code	Quantity	Amount	Sub-Total in USD($)
Extension - 2 months with $0 paid	1252	1	640	640
Miscellaneous:				
RCE- 1ST REQUEST	1801	1	1360	1360
		Total in USD ($)		**2000**

Electronic Acknowledgement Receipt	
EFS ID:	47597274
Application Number:	16696383
International Application Number:	
Confirmation Number:	6816
Title of Invention:	GLOW FISH TAPE SYSTEM
First Named Inventor/Applicant Name:	Daniel R. Pearson
Customer Number:	161268
Filer:	Jeffery Neal Fairchild
Filer Authorized By:	
Attorney Docket Number:	751391
Receipt Date:	27-FEB-2023
Filing Date:	26-NOV-2019
Time Stamp:	16:14:53
Application Type:	Utility under 35 USC 111(a)

Payment information:

Submitted with Payment	yes
Payment Type	DA
Payment was successfully received in RAM	$2000
RAM confirmation Number	E20232QG16238408
Deposit Account	602056
Authorized User	Jeffery Fairchild
The Director of the USPTO is hereby authorized to charge indicated fees and credit any overpayment as follows: 37 CFR 1.17 (Patent application and reexamination processing fees) 37 CFR 1.21 (Miscellaneous fees and charges)	

File Listing:

Document Number	Document Description	File Name	File Size(Bytes)/ Message Digest	Multi Part /.zip	Pages (if appl.)
1	Extension of Time	00058P00USPetitionForExtensionOfTime.pdf	429736 e91720baebd0150fc82d7a79db6bc5f97d983076	no	2
Warnings:					
Information:					
2	Request for Continued Examination (RCE)	00058P00USRequestForContinuedExamination.pdf	84196 43f95bc59d43cea4bcc9c8cdd4a7285d563f3bc5	no	2
Warnings:					
This is not a USPTO supplied RCE SB30 form.					
Information:					
3	Amendment Submitted/Entered with Filing of Continued Prosecution Application (CPA)/Request for Continued Examination(RCE)	00058P0USResponseToFinalOfficeAction.pdf	82841 8b135002a373e90b23bcfe5819cdd4c6a43346ad	no	7
Warnings:					
Information:					
4	Fee Worksheet (SB06)	fee-info.pdf	40749 c3603ffdac89b35c1c368f542d07b37a4ba3b599	no	2
Warnings:					
Information:					
		Total Files Size (in bytes):	637522		

This Acknowledgement Receipt evidences receipt on the noted date by the USPTO of the indicated documents, characterized by the applicant, and including page counts, where applicable. It serves as evidence of receipt similar to a Post Card, as described in MPEP 503.

New Applications Under 35 U.S.C. 111
If a new application is being filed and the application includes the necessary components for a filing date (see 37 CFR 1.53(b)-(d) and MPEP 506), a Filing Receipt (37 CFR 1.54) will be issued in due course and the date shown on this Acknowledgement Receipt will establish the filing date of the application.
National Stage of an International Application under 35 U.S.C. 371
If a timely submission to enter the national stage of an international application is compliant with the conditions of 35 U.S.C. 371 and other applicable requirements a Form PCT/DO/EO/903 indicating acceptance of the application as a national stage submission under 35 U.S.C. 371 will be issued in addition to the Filing Receipt, in due course.
New International Application Filed with the USPTO as a Receiving Office
If a new international application is being filed and the international application includes the necessary components for an international filing date (see PCT Article 11 and MPEP 1810), a Notification of the International Application Number and of the International Filing Date (Form PCT/RO/105) will be issued in due course, subject to prescriptions concerning national security, and the date shown on this Acknowledgement Receipt will establish the international filing date of the application.

PTO/AIA/22 (12-22)
Approved for use through 05/31/2024. OMB 0651-0031
U.S. Patent and Trademark Office; U.S. DEPARTMENT OF COMMERCE
Under the Paperwork Reduction Act of 1995, no persons are required to respond to a collection of information unless it displays a valid OMB control number.

PETITION FOR EXTENSION OF TIME UNDER 37 CFR 1.136(a)	Docket Number (Optional) 751391
Application Number 16/696,383	Filed 11/26/2019
For Response to Office Action and RCA	
Art Unit 2858	Examiner Nguyen, Hoai An D

This is a request under the provisions of 37 CFR 1.136(a) to extend the period for filing a reply in the above-identified application.

The requested extension and fee are as follows (check time period desired and enter the appropriate fee below):

		Fee	Small Entity Fee	Micro Entity Fee	
☐	One month (37 CFR 1.17(a)(1))	$220	$88	$44	$
☑	Two months (37 CFR 1.17(a)(2))	$640	$256	$128	$ 640
☐	Three months (37 CFR 1.17(a)(3))	$1,480	$592	$296	$
☐	Four months (37 CFR 1.17(a)(4))	$2,320	$928	$464	$
☐	Five months (37 CFR 1.17(a)(5))	$3,160	$1,264	$632	$

☐ Applicant asserts small entity status. See 37 CFR 1.27.

☐ Applicant certifies micro entity status. See 37 CFR 1.29.
Form PTO/SB/15A or B or equivalent must either be enclosed or have been submitted previously.

☐ A check in the amount of the fee is enclosed.

☐ Payment by credit card. Form PTO-2038 is attached.

☐ The Director has already been authorized to charge fees in this application to a Deposit Account.

☐ The Director is hereby authorized to charge any fees which may be required, or credit any overpayment, to Deposit Account Number _____.

☑ Payment made via USPTO's patent electronic filing system (Patent Center or EFS-Web).

WARNING: Information on this form may become public. Credit card information should not be included on this form. Provide credit card information and authorization on PTO-2038.

I am the

☐ applicant.

☑ attorney or agent of record. Registration number 37825.

☑ attorney or agent acting under 37 CFR 1.34. Registration number 37825.

/JEFFERY N FAIRCHILD/	02/27/2023
Signature	Date
Jeffery Fairchild	8478215549
Typed or printed name	Telephone Number

NOTE: This form must be signed in accordance with 37 CFR 1.33. See 37 CFR 1.4 for signature requirements and certifications. Submit multiple forms if more than one signature is required, see below*.

☐ * Total of one forms are submitted.

A Federal agency may not conduct or sponsor, and a person is not required to respond to, nor shall a person be subject to a penalty for failure to comply with an information collection subject to the requirements of the Paperwork Reduction Act of 1995, unless the information collection has a currently valid OMB Control Number. The OMB Control Number for this information collection is 0651-0031. Public burden for this form is estimated to average 6 minutes per response, including the time for reviewing instructions, searching existing data sources, gathering and maintaining the data needed, and completing and reviewing the information collection. Send comments regarding this burden estimate or any other aspect of this information collection, including suggestions for reducing this burden to the Chief Administrative Officer, United States Patent and Trademark Office, P.O. Box 1450, Alexandria, VA 22313-1450 or email InformationCollection@uspto.gov. **DO NOT SEND FEES OR COMPLETED FORMS TO THIS ADDRESS**. If filing this completed form by mail, send to: **Commissioner for Patents, P.O. Box 1450, Alexandria, VA 22313-1450**.

If you need assistance in completing the form, call 1-800-PTO-9199 and select option 2.

Privacy Act Statement

The Privacy Act of 1974 (P.L. 93-579) requires that you be given certain information in connection with your submission of the attached form related to a patent application or patent. The United States Patent and Trademark Office (USPTO) collects the information in this record under authority of 35 U.S.C. 2. The USPTO's system of records is used to manage all applicant and owner information including name, citizenship, residence, post office address, and other information with respect to inventors and their legal representatives pertaining to the applicant's/owner's activities in connection with the invention for which a patent is sought or has been granted. The applicable Privacy Act System of Records Notice for the information collected in this form is COMMERCE/PAT-TM-7 Patent Application Files, available in the Federal Register at 78 FR 19243 (March 29, 2013). https://www.govinfo.gov/content/pkg/FR-2013-03-29/pdf/2013-07341.pdf

Routine uses of the information in this record may include disclosure to: 1) law enforcement, in the event that the system of records indicates a violation or potential violation of law; 2) a Federal, state, local, or international agency, in response to its request; 3) a contractor of the USPTO having need for the information in order to perform a contract; 4) the Department of Justice for determination of whether the Freedom of Information Act (FOIA) requires disclosure of the record; 5) a Member of Congress submitting a request involving an individual to whom the record pertains, when the individual has requested the Member's assistance with respect to the subject matter of the record; 6) a court, magistrate, or administrative tribunal, in the course of presenting evidence, including disclosures to opposing counsel in the course of settlement negotiations; 7) the Administrator, General Services Administration (GSA), or their designee, during an inspection of records conducted by GSA under authority of 44 U.S.C. 2904 and 2906, in accordance with the GSA regulations and any other relevant (i.e., GSA or Commerce) directive, where such disclosure shall not be used to make determinations about individuals; 8) another federal agency for purposes of National Security review (35 U.S.C. 181) and for review pursuant to the Atomic Energy Act (42 U.S.C. 218(c)); 9) the Office of Personnel Management (OPM) for personnel research purposes; and 9) the Office of Management and Budget (OMB) for legislative coordination and clearance.

If you do not furnish the information requested on this form, the USPTO may not be able to process and/or examine your submission, which may result in termination of proceedings, abandonment of the application, and/or expiration of the patent.

Additional Uses

Additional USPTO uses of the information in this record may include disclosure to: 1) the International Bureau of the World Intellectual Property Organization, if the record is related to an international application filed under the Patent Cooperation Treaty; 2) the public i) after publication of the application pursuant to 35 U.S.C. 122(b), ii) after issuance of a patent pursuant to 35 U.S.C. 151, iii) if the record was filed in an application which became abandoned or in which the proceedings were terminated and which application is referenced by either a published application, an application open to public inspections, or an issued patent, or iv) without publication of the application or patent under the specific circumstances provided for by 37 CFR 1.14(a)(1)(v)-(vii); and/or 3) the National Archives and Records Administration, for inspection of records.

IN THE UNITED STATES PATENT AND TRADEMARK OFFICE

Patent Application No. 16/696,383

Confirmation No. 6816

First Named Inventor: Pearson

Filed or 371 Date: 11/26/2019

TC/AU: 2858

Examiner: Nguyen, Hoai An D

Commissioner for Patents

P.O. Box 1450

Alexandria, VA 22313-1450

Response

Sir, in response to the Office Action dated 9/26/2022 Applicant hereby responds as follows:

Milwaukee Electric Tool Corporation
Ex-1015
Page 185 of 237

Amendments to the Claims

Please amend the claims as follows:

1. (Currently amended) A fish tape system comprising:

a fish tape having a length extending from a first end to a second end, the length of the fish tape comprising a luminescent material that emits light after being energized by exposure to a light source; ~~and~~

a donut shaped case having a pair of sidewalls extending between a radially innermost wall and a radially outermost wall, the outermost wall having an annular opening extending around a circumference of the outer wall, the sidewalls being spaced from each other to define a fish tape storage compartment that stores the length of fish tape for deployment via the annular opening in the case; and

a handle engaged with the fish tape and mounted to slide within the annular opening of the case around the entire circumference of the outer wall to deploy the fish tape from the storage compartment and to reload the fish tape into the compartment;

wherein at least one of the sidewalls of the case is transparent to allow the luminescent material to be energized by light passing through the at least one of the sidewalls.

2. The fish tape system of claim 1 wherein both of the sidewalls of the case are transparent to allow the luminescent material to be energized by light passing through the sidewalls.

3. The fish tape system of claim 2 wherein at least one of the innermost and outermost walls is transparent to allow the luminescent material to be energized by light passing through the sidewalls.

4. The fish tape system of claim 1 wherein one of the sidewalls and portions of the innermost and outermost walls are defined by a first component of the case, and the other of the sidewalls and other portions of the innermost and outermost walls are defined by a second component of the case, the first and second components being assembled together to form the storage compartment.

5. (Canceled)

6. The fish tape system of claim 1 wherein the fish tape further comprises a threaded opening in at least one of the first and second ends.

7. (Currently amended) A fish tape system comprising:

a fish tape having a length extending from a first end to a second end, the length of the fish tape comprising a luminescent material that emits light after being energized by exposure to a light source; ~~and~~

a donut shaped case having a pair of sidewalls extending between a radially innermost wall and a radially outermost wall, an annular opening extending around a circumference of one of the inner and outer walls, the sidewalls being spaced from each other to define a fish tape storage compartment that stores the length of fish tape for deployment via the annular opening in the case; <u>and</u>

<u>a handle engaged with the fish tape and mounted to slide within the annular opening of the case around the entire circumference to deploy the fish tape from the storage compartment and to reload the fish tape into the compartment;</u>

wherein at least a portion of the case is transparent to allow the luminescent material to be energized by light passing through the portion.

8. The fish tape system of claim 7 wherein at least a portion of at least one of the sidewalls of the case is transparent to allow the luminescent material to be energized by light passing through the at least one of the sidewalls.

9. The fish tape system of claim 7 wherein at least portions of both of the sidewalls of the case are transparent to allow the luminescent material to be energized by light passing through the sidewalls.

10. The fish tape system of claim 7 wherein at least portions of all the walls of the case are transparent.

11. The fish tape system of claim 7 wherein one of the sidewalls and portions of the innermost and outermost walls are defined by a first component of the case, and the other of the sidewalls and other portions of the innermost and outermost walls are defined by a second component of the case, the first and second components being assembled together to form the storage compartment.

12. The fish tape system of claim 11 wherein at least one of the first and second components comprises a transparent material.

13. The fish tape system of claim 11 wherein both of the first and second components comprises a transparent material.

14. (Cancelled)

15. The fish tape system of claim 7 wherein the fish tape further comprises a threaded opening in at least one of the first and second ends.

16. (Currently amended) A fish tape system comprising:

a fish tape having a length extending from a first end to a second end, the length of the fish tape comprising a luminescent material that emits light after being energized by exposure to a light source; ~~and~~

a case having a fish tape storage compartment that stores the length of fish tape for deployment and reloading via an <u>annular</u> opening in the case; <u>and</u>

<u>a handle engaged with the fish tape and mounted to slide within the annular opening of the case around an entire circumference of the annular opening to deploy the fish tape from the storage compartment and to reload the fish tape into the compartment;</u>

wherein at least a portion of the case is transparent to allow the luminescent material to be energized by light passing through the portion and into the storage compartment.

17. The fish tape system of claim 16 wherein the storage compartment has an annular shape bounded by a pair of spaced sidewalls.

18. The fish tape system of claim 17 wherein at least a portion of at least one of the sidewalls is transparent.

19. The fish tape system of claim 18 wherein portions of both of the sidewalls are transparent.

20. The fish tape system of claim 16 wherein the case comprises a pair of components that are joined to each other to define the storage compartment, and at least one of the pair of components comprises a transparent material.

Remarks/Arguments

Claims 5 and 14 have been cancelled. Accordingly, claims 1-4, 6-13, and 15-20 are pending and at issue.

Independent claims 1, 7, and 16 have been amended to overcome the Section 103 rejection based on Miller et al. (US 2019/0292005 A1) in view of Farretta (US 6,293,519 B1).

More specifically, independent claims 1, 7, and 16 have been amended to further recite a handle engaged with the fish tape and mounted to slide within the annular opening of the case around an entire circumference to deploy the fish tape from the storage compartment and to reload the fish tape into the compartment. This structure is neither shown nor suggested in Miller et al. which discloses a fish tape tool having a housing with a handle that is fixed to prevent relative movement between the handle and the housing, with the housing being configured to receive fish tape drums that, with each fish tape drum containing a length of fish tape. The housing of Miller et al. doesn't have an annular opening, let alone a handle mounted to slide within such an annular opening to deploy a fish tape from a storage compartment and to reload the fish tape into the compartment. Furthermore, one skilled in the art would not modify Miller et al. to include such a handle because such a modification would completely change the principle of operation of Miller at al. (the use of a housing with a fixed handle, with a output reel that rotates a fish tape drum contained within the housing to deploy a fish tape from the fish tape drum and to reload the fish tape into the fish tape drum), would require a complete reconstruction of the structures disclosed in Miller et al. (the elimination of the housing, the elimination of the output reel, and the addition of a handle to the fish tape drum) and would defeat the purpose of Miller et al. which is to provide a housing that can receive individual fish tape drums and rotate each of those drums within the housing to deploy and retract a fish tape from and into each of the individual fish tape drums. Farretta adds nothing in this regard and in no way suggests that the fish tape tools of Miller et al. should be modified in a way that would completely change the principle of operation of the fish tape tools, or that would require a complete reconstruction of the fish tape tools, or that would defeat the very purpose of the fish tape tools. Accordingly, it is respectfully submitted that the Section 103 rejection of claims 1, 7, and 16 and their dependent claims should be withdrawn and the claims allowed in view of the amendments to claims 1, 7, and 16.

Applicant hereby petitions for any time extension required for consideration of this response and for the Request for Continued Examination filed herewith, The Director is hereby authorized to charge any additional fees that may be required for this time extension, or to credit any overpayment, to Deposit Account Number 602056.

If there are any other issues remaining which the Examiner believes could be resolved through either a Supplemental Response or an Examiner's Amendment, the Examiner is respectfully requested to contact the undersigned at the telephone number indicated below.

Dated: **2/27/2023**

Respectfully submitted,

By___/Jeffery N. Fairchild/__

Jeffery N. Fairchild, Reg. No. 37825

Klein Tools
450 Bond Street
Lincolnshire, Il 60069
(847) 821-5549 (Telephone)
Attorney for Applicant

Issue Classification	Application/Control No.	Applicant(s)/Patent Under Reexamination
	16/696,383	Pearson, Daniel R.
	Examiner	**Art Unit**
	HOAI-AN D NGUYEN	2858

CPC

Symbol					Type	Version
B65H	/	75	/	406	F	2013-01-01
H02G	/	11	/	02	I	2013-01-01
B65H	/	2701	/	376	A	2013-01-01

CPC Combination Sets

Symbol					Type	Set	Ranking	Version
	/		/					

NONE (Assistant Examiner)	(Date)	**Total Claims Allowed:** 18	
/HOAI-AN D. NGUYEN/ Primary Examiner, Art Unit 2858 (Primary Examiner)	07 March 2023 (Date)	O.G. Print Claim(s) 1	O.G. Print Figure 1

U.S. Patent and Trademark Office

Part of Paper No.: 20230307

Issue Classification	Application/Control No.	Applicant(s)/Patent Under Reexamination
	16/696,383	Pearson, Daniel R.
	Examiner	**Art Unit**
	HOAI-AN D NGUYEN	2858

INTERNATIONAL CLASSIFICATION					
CLAIMED					
B65H	/	75	/	40	
H02G	/	11	/	02	

NON-CLAIMED					
	/		/		

US ORIGINAL CLASSIFICATION	
CLASS	**SUBCLASS**
254	134.3FT

CROSS REFERENCES(S)						
CLASS	**SUBCLASS (ONE SUBCLASS PER BLOCK)**					
254	134.3R					

NONE (Assistant Examiner)	(Date)	**Total Claims Allowed:** 18	
/HOAI-AN D. NGUYEN/ Primary Examiner, Art Unit 2858 (Primary Examiner)	07 March 2023 (Date)	O.G. Print Claim(s) 1	O.G. Print Figure 1

U.S. Patent and Trademark Office

Part of Paper No.: 20230307

Issue Classification	Application/Control No.	Applicant(s)/Patent Under Reexamination
	16/696,383	Pearson, Daniel R.
	Examiner	**Art Unit**
	HOAI-AN D NGUYEN	2858

☐ Claims renumbered in the same order as presented by applicant ☐ CPA ☐ T.D. ☐ R.1.47

CLAIMS

Final	Original	Final	Original	Final	Original	Final	Original	Final	Original	Final	Original	Final	Original	Final	Original
1	1	10	10	17	19										
2	2	11	11	18	20										
3	3	12	12												
4	4	13	13												
-	5	-	14												
5	6	7	15												
6	7	14	16												
8	8	15	17												
9	9	16	18												

NONE (Assistant Examiner)	(Date)	**Total Claims Allowed:** 18	
/HOAI-AN D. NGUYEN/ Primary Examiner, Art Unit 2858 (Primary Examiner)	07 March 2023 (Date)	O.G. Print Claim(s) 1	O.G. Print Figure 1

U.S. Patent and Trademark Office Part of Paper No.: 20230307

Index of Claims	Application/Control No.	Applicant(s)/Patent Under Reexamination
	16/696,383	Pearson, Daniel R.
	Examiner	**Art Unit**
	HOAI-AN D NGUYEN	2858

✓	Rejected	-	Cancelled	N	Non-Elected	A	Appeal
=	Allowed	÷	Restricted	I	Interference	O	Objected

CLAIMS

☐ Claims renumbered in the same order as presented by applicant ☐ CPA ☐ T.D. ☐ R.1.47

CLAIM		DATE								
Final	Original	03/07/2023								
1	1	=								
2	2	=								
3	3	=								
4	4	=								
	5	-								
5	6	=								
6	7	=								
8	8	=								
9	9	=								
10	10	=								
11	11	=								
12	12	=								
13	13	=								
	14	-								
7	15	=								
14	16	=								
15	17	=								
16	18	=								
17	19	=								
18	20	=								

Search Notes	Application/Control No.	Applicant(s)/Patent Under Reexamination
	16/696,383	Pearson, Daniel R.
	Examiner	**Art Unit**
	HOAI-AN D NGUYEN	2858

CPC - Searched*		
Symbol	**Date**	**Examiner**
B65H75/00, 02, 34, 36, 362, 364, 38, 40, 406 (Updated).	03/07/2023	HADN
B65H2701/00, 30, 37, 376 (Updated).	03/07/2023	HADN
H02G11/00, 006, 02, 06, 08, 083, 085 (Updated).	03/07/2023	HADN

CPC Combination Sets - Searched*		
Symbol	**Date**	**Examiner**

US Classification - Searched*			
Class	**Subclass**	**Date**	**Examiner**
254	134.3R, 134.3FT (Updated).	03/19/2023	HADN

* See search history printout included with this form or the SEARCH NOTES box below to determine the scope of the search.

Search Notes		
Search Notes	**Date**	**Examiner**
Reviewed all previously searched prior art references.	03/06/2023	HADN
Inventor's name searched.	03/07/2023	HADN
Text search in PE2E SEARCH.	03/07/2023	HADN

Interference Search			
US Class/CPC Symbol	**US Subclass/CPC Group**	**Date**	**Examiner**
Interference Search History Printout.		03/07/2023	HADN

Milwaukee Electric Tool Corporation
Ex-1015
Page 196 of 237

Search Notes	Application/Control No.	Applicant(s)/Patent Under Reexamination
	16/696,383	Pearson, Daniel R.
	Examiner	**Art Unit**
	HOAI-AN D NGUYEN	2858

PE2E SEARCH - Search History (Prior Art)

Ref #	Hits	Search Query	DBs	Default Operator	Plurals	British Equivalents	Time Stamp
L190	6	(B65H75/00.cpc.) AND @ad<"20191126" AND @pd>"20220919"	(US-PGPUB; USPAT; USOCR; FIT (AP, AT, AU, BE, BG, BR, BY, CA, CH, CN, CS, CU, CZ, DD, DE, DK, EA, EE, EP, ES, FI, FR, GB, HR, HU, ID, IE, IL, IS, IT, JP, KR, LT, LU, LV, MA, MC, MD, MY, NL, NO, NZ, OA, PH, PL, PT, RO, RS, RU, SE, SG, SI, SK, SU, TH, TN, TR, TW, UA, VN, WO); FPRS; EPO; JPO; DERWENT; IBM_TDB)	OR	ON	ON	2023/03/07 08:19 AM
L191	7	(B65H75/02.cpc.) AND @ad<"20191126" AND @pd>"20220919"	(US-PGPUB; USPAT; USOCR; FIT (AP, AT, AU, BE, BG, BR, BY, CA, CH, CN, CS, CU, CZ, DD, DE, DK, EA, EE, EP, ES, FI, FR, GB, HR, HU, ID, IE, IL, IS, IT, JP, KR, LT, LU, LV, MA, MC, MD, MY, NL, NO, NZ, OA, PH, PL, PT, RO, RS, RU, SE, SG, SI, SK, SU, TH, TN, TR, TW, UA, VN, WO); FPRS; EPO; JPO; DERWENT; IBM_TDB)	OR	ON	ON	2023/03/07 08:19 AM
L192	14	(B65H75/34.cpc.) AND @ad<"20191126" AND @pd>"20220919"	(US-PGPUB; USPAT; USOCR; FIT (AP, AT, AU, BE, BG, BR, BY, CA, CH, CN, CS, CU, CZ, DD, DE, DK, EA, EE, EP, ES, FI, FR, GB, HR, HU, ID, IE, IL, IS, IT, JP, KR, LT, LU, LV, MA, MC, MD, MY, NL, NO, NZ, OA, PH, PL, PT, RO, RS, RU, SE, SG, SI, SK, SU, TH, TN, TR, TW, UA, VN, WO); FPRS; EPO; JPO; DERWENT; IBM_TDB)	OR	ON	ON	2023/03/07 08:20 AM
L193	0	(B65H75/36.cpc.) AND @ad<"20191126" AND @pd>"20220919"	(US-PGPUB; USPAT; USOCR; FIT (AP, AT, AU, BE, BG, BR, BY, CA, CH, CN, CS, CU,	OR	ON	ON	2023/03/07 08:20 AM

			CZ, DD, DE, DK, EA, EE, EP, ES, FI, FR, GB, HR, HU, ID, IE, IL, IS, IT, JP, KR, LT, LU, LV, MA, MC, MD, MY, NL, NO, NZ, OA, PH, PL, PT, RO, RS, RU, SE, SG, SI, SK, SU, TH, TN, TR, TW, UA, VN, WO); FPRS; EPO; JPO; DERWENT; IBM_TDB)				
L194	2	(B65H75/362.cpc.) AND @ad<"20191126" AND @pd>"20220919"	(US-PGPUB; USPAT; USOCR; FIT (AP, AT, AU, BE, BG, BR, BY, CA, CH, CN, CS, CU, CZ, DD, DE, DK, EA, EE, EP, ES, FI, FR, GB, HR, HU, ID, IE, IL, IS, IT, JP, KR, LT, LU, LV, MA, MC, MD, MY, NL, NO, NZ, OA, PH, PL, PT, RO, RS, RU, SE, SG, SI, SK, SU, TH, TN, TR, TW, UA, VN, WO); FPRS; EPO; JPO; DERWENT; IBM_TDB)	OR	ON	ON	2023/03/07 08:20 AM
L195	13	(B65H75/364.cpc.) AND @ad<"20191126" AND @pd>"20220919"	(US-PGPUB; USPAT; USOCR; FIT (AP, AT, AU, BE, BG, BR, BY, CA, CH, CN, CS, CU, CZ, DD, DE, DK, EA, EE, EP, ES, FI, FR, GB, HR, HU, ID, IE, IL, IS, IT, JP, KR, LT, LU, LV, MA, MC, MD, MY, NL, NO, NZ, OA, PH, PL, PT, RO, RS, RU, SE, SG, SI, SK, SU, TH, TN, TR, TW, UA, VN, WO); FPRS; EPO; JPO; DERWENT; IBM_TDB)	OR	ON	ON	2023/03/07 08:21 AM
L196	9	(B65H75/38.cpc.) AND @ad<"20191126" AND @pd>"20220919"	(US-PGPUB; USPAT; USOCR; FIT (AP, AT, AU, BE, BG, BR, BY, CA, CH, CN, CS, CU, CZ, DD, DE, DK, EA, EE, EP, ES, FI, FR, GB, HR, HU, ID, IE, IL, IS, IT, JP, KR, LT, LU, LV, MA, MC, MD, MY, NL, NO, NZ, OA, PH, PL, PT, RO, RS, RU, SE, SG, SI, SK, SU, TH, TN, TR, TW, UA, VN,	OR	ON	ON	2023/03/07 08:22 AM

			WO); FPRS; EPO; JPO; DERWENT; IBM_TDB)				
L197	13	(B65H75/40.cpc.) AND @ad<"20191126" AND @pd>"20220919"	(US-PGPUB; USPAT; USOCR; FIT (AP, AT, AU, BE, BG, BR, BY, CA, CH, CN, CS, CU, CZ, DD, DE, DK, EA, EE, EP, ES, FI, FR, GB, HR, HU, ID, IE, IL, IS, IT, JP, KR, LT, LU, LV, MA, MC, MD, MY, NL, NO, NZ, OA, PH, PL, PT, RO, RS, RU, SE, SG, SI, SK, SU, TH, TN, TR, TW, UA, VN, WO); FPRS; EPO; JPO; DERWENT; IBM_TDB)	OR	ON	ON	2023/03/07 08:23 AM
L198	16	(B65H75/406.cpc.) AND @ad<"20191126" AND @pd>"20220919"	(US-PGPUB; USPAT; USOCR; FIT (AP, AT, AU, BE, BG, BR, BY, CA, CH, CN, CS, CU, CZ, DD, DE, DK, EA, EE, EP, ES, FI, FR, GB, HR, HU, ID, IE, IL, IS, IT, JP, KR, LT, LU, LV, MA, MC, MD, MY, NL, NO, NZ, OA, PH, PL, PT, RO, RS, RU, SE, SG, SI, SK, SU, TH, TN, TR, TW, UA, VN, WO); FPRS; EPO; JPO; DERWENT; IBM_TDB)	OR	ON	ON	2023/03/07 08:23 AM
L199	3	(B65H2701/00.cpc.) AND @ad<"20191126" AND @pd>"20220919"	(US-PGPUB; USPAT; USOCR; FIT (AP, AT, AU, BE, BG, BR, BY, CA, CH, CN, CS, CU, CZ, DD, DE, DK, EA, EE, EP, ES, FI, FR, GB, HR, HU, ID, IE, IL, IS, IT, JP, KR, LT, LU, LV, MA, MC, MD, MY, NL, NO, NZ, OA, PH, PL, PT, RO, RS, RU, SE, SG, SI, SK, SU, TH, TN, TR, TW, UA, VN, WO); FPRS; EPO; JPO; DERWENT; IBM_TDB)	OR	ON	ON	2023/03/07 08:26 AM
L200	1	(B65H2701/30.cpc.) AND @ad<"20191126" AND @pd>"20220919"	(US-PGPUB; USPAT; USOCR; FIT (AP, AT, AU, BE, BG, BR, BY, CA, CH, CN, CS, CU, CZ, DD, DE, DK, EA,	OR	ON	ON	2023/03/07 08:28 AM

			EE, EP, ES, FI, FR, GB, HR, HU, ID, IE, IL, IS, IT, JP, KR, LT, LU, LV, MA, MC, MD, MY, NL, NO, NZ, OA, PH, PL, PT, RO, RS, RU, SE, SG, SI, SK, SU, TH, TN, TR, TW, UA, VN, WO); FPRS; EPO; JPO; DERWENT; IBM_TDB)				
L201	22	(B65H2701/37.cpc.) AND @ad<"20191126" AND @pd>"20220919"	(US-PGPUB; USPAT; USOCR; FIT (AP, AT, AU, BE, BG, BR, BY, CA, CH, CN, CS, CU, CZ, DD, DE, DK, EA, EE, EP, ES, FI, FR, GB, HR, HU, ID, IE, IL, IS, IT, JP, KR, LT, LU, LV, MA, MC, MD, MY, NL, NO, NZ, OA, PH, PL, PT, RO, RS, RU, SE, SG, SI, SK, SU, TH, TN, TR, TW, UA, VN, WO); FPRS; EPO; JPO; DERWENT; IBM_TDB)	OR	ON	ON	2023/03/07 08:28 AM
L202	5	(B65H2701/376.cpc.) AND @ad<"20191126" AND @pd>"20220919"	(US-PGPUB; USPAT; USOCR; FIT (AP, AT, AU, BE, BG, BR, BY, CA, CH, CN, CS, CU, CZ, DD, DE, DK, EA, EE, EP, ES, FI, FR, GB, HR, HU, ID, IE, IL, IS, IT, JP, KR, LT, LU, LV, MA, MC, MD, MY, NL, NO, NZ, OA, PH, PL, PT, RO, RS, RU, SE, SG, SI, SK, SU, TH, TN, TR, TW, UA, VN, WO); FPRS; EPO; JPO; DERWENT; IBM_TDB)	OR	ON	ON	2023/03/07 08:29 AM
L203	95	(H02G11/00.cpc.) AND @ad<"20191126" AND @pd>"20220919"	(US-PGPUB; USPAT; USOCR; FIT (AP, AT, AU, BE, BG, BR, BY, CA, CH, CN, CS, CU, CZ, DD, DE, DK, EA, EE, EP, ES, FI, FR, GB, HR, HU, ID, IE, IL, IS, IT, JP, KR, LT, LU, LV, MA, MC, MD, MY, NL, NO, NZ, OA, PH, PL, PT, RO, RS, RU, SE, SG, SI, SK, SU, TH, TN, TR, TW, UA, VN, WO); FPRS; EPO;	OR	ON	ON	2023/03/07 08:30 AM

			JPO; DERWENT; IBM_TDB)				
L204	80	(H02G11/006.cpc.) AND @ad<"20191126" AND @pd>"20220919"	(US-PGPUB; USPAT; USOCR; FIT (AP, AT, AU, BE, BG, BR, BY, CA, CH, CN, CS, CU, CZ, DD, DE, DK, EA, EE, EP, ES, FI, FR, GB, HR, HU, ID, IE, IL, IS, IT, JP, KR, LT, LU, LV, MA, MC, MD, MY, NL, NO, NZ, OA, PH, PL, PT, RO, RS, RU, SE, SG, SI, SK, SU, TH, TN, TR, TW, UA, VN, WO); FPRS; EPO; JPO; DERWENT; IBM_TDB)	OR	ON	ON	2023/03/07 08:30 AM
L205	53	(H02G11/02.cpc.) AND @ad<"20191126" AND @pd>"20220919"	(US-PGPUB; USPAT; USOCR; FIT (AP, AT, AU, BE, BG, BR, BY, CA, CH, CN, CS, CU, CZ, DD, DE, DK, EA, EE, EP, ES, FI, FR, GB, HR, HU, ID, IE, IL, IS, IT, JP, KR, LT, LU, LV, MA, MC, MD, MY, NL, NO, NZ, OA, PH, PL, PT, RO, RS, RU, SE, SG, SI, SK, SU, TH, TN, TR, TW, UA, VN, WO); FPRS; EPO; JPO; DERWENT; IBM_TDB)	OR	ON	ON	2023/03/07 08:30 AM
L206	0	(H02G11/06.cpc.) AND @ad<"20191126" AND @pd>"20220919"	(US-PGPUB; USPAT; USOCR; FIT (AP, AT, AU, BE, BG, BR, BY, CA, CH, CN, CS, CU, CZ, DD, DE, DK, EA, EE, EP, ES, FI, FR, GB, HR, HU, ID, IE, IL, IS, IT, JP, KR, LT, LU, LV, MA, MC, MD, MY, NL, NO, NZ, OA, PH, PL, PT, RO, RS, RU, SE, SG, SI, SK, SU, TH, TN, TR, TW, UA, VN, WO); FPRS; EPO; JPO; DERWENT; IBM_TDB)	OR	ON	ON	2023/03/07 08:31 AM
L207	0	(H02G11/08.cpc.) AND @ad<"20191126" AND @pd>"20220919"	(US-PGPUB; USPAT; USOCR; FIT (AP, AT, AU, BE, BG, BR, BY, CA, CH, CN, CS, CU, CZ, DD, DE, DK, EA, EE, EP, ES, FI, FR, GB,	OR	ON	ON	2023/03/07 08:31 AM

			HR, HU, ID, IE, IL, IS, IT, JP, KR, LT, LU, LV, MA, MC, MD, MY, NL, NO, NZ, OA, PH, PL, PT, RO, RS, RU, SE, SG, SI, SK, SU, TH, TN, TR, TW, UA, VN, WO); FPRS; EPO; JPO; DERWENT; IBM_TDB)				
L208	0	(H02G11/083.cpc.) AND @ad<"20191126" AND @pd>"20220919"	(US-PGPUB; USPAT; USOCR; FIT (AP, AT, AU, BE, BG, BR, BY, CA, CH, CN, CS, CU, CZ, DD, DE, DK, EA, EE, EP, ES, FI, FR, GB, HR, HU, ID, IE, IL, IS, IT, JP, KR, LT, LU, LV, MA, MC, MD, MY, NL, NO, NZ, OA, PH, PL, PT, RO, RS, RU, SE, SG, SI, SK, SU, TH, TN, TR, TW, UA, VN, WO); FPRS; EPO; JPO; DERWENT; IBM_TDB)	OR	ON	ON	2023/03/07 08:32 AM
L209	0	(H02G11/085.cpc.) AND @ad<"20191126" AND @pd>"20220919"	(US-PGPUB; USPAT; USOCR; FIT (AP, AT, AU, BE, BG, BR, BY, CA, CH, CN, CS, CU, CZ, DD, DE, DK, EA, EE, EP, ES, FI, FR, GB, HR, HU, ID, IE, IL, IS, IT, JP, KR, LT, LU, LV, MA, MC, MD, MY, NL, NO, NZ, OA, PH, PL, PT, RO, RS, RU, SE, SG, SI, SK, SU, TH, TN, TR, TW, UA, VN, WO); FPRS; EPO; JPO; DERWENT; IBM_TDB)	OR	ON	ON	2023/03/07 08:32 AM
L210	329	(Pearson near2 Daniel).inv.	(US-PGPUB; USPAT; USOCR; FIT (AP, AT, AU, BE, BG, BR, BY, CA, CH, CN, CS, CU, CZ, DD, DE, DK, EA, EE, EP, ES, FI, FR, GB, HR, HU, ID, IE, IL, IS, IT, JP, KR, LT, LU, LV, MA, MC, MD, MY, NL, NO, NZ, OA, PH, PL, PT, RO, RS, RU, SE, SG, SI, SK, SU, TH, TN, TR, TW, UA, VN, WO); FPRS; EPO; JPO; DERWENT;	OR	ON	ON	2023/03/07 08:32 AM

			IBM_TDB)				
L211	1	(L190 L191 L192 L194 L195 L196 L197 L198) AND (((fish flex$3) adj2 tape) WITH (length size dimension width range distance) WITH (first adj2 (end$3 terminal point node location)) WITH (second adj2 (end$3 terminal point node location)))	(US-PGPUB; USPAT; USOCR; FIT (AP, AT, AU, BE, BG, BR, BY, CA, CH, CN, CS, CU, CZ, DD, DE, DK, EA, EE, EP, ES, FI, FR, GB, HR, HU, ID, IE, IL, IS, IT, JP, KR, LT, LU, LV, MA, MC, MD, MY, NL, NO, NZ, OA, PH, PL, PT, RO, RS, RU, SE, SG, SI, SK, SU, TH, TN, TR, TW, UA, VN, WO); FPRS; EPO; JPO; DERWENT; IBM_TDB)	OR	ON	ON	2023/03/07 08:35 AM
L212	1	(L199 L200 L201 L202) AND (((fish flex$3) adj2 tape) WITH (length size dimension width range distance) WITH (first adj2 (end$3 terminal point node location)) WITH (second adj2 (end$3 terminal point node location)))	(US-PGPUB; USPAT; USOCR; FIT (AP, AT, AU, BE, BG, BR, BY, CA, CH, CN, CS, CU, CZ, DD, DE, DK, EA, EE, EP, ES, FI, FR, GB, HR, HU, ID, IE, IL, IS, IT, JP, KR, LT, LU, LV, MA, MC, MD, MY, NL, NO, NZ, OA, PH, PL, PT, RO, RS, RU, SE, SG, SI, SK, SU, TH, TN, TR, TW, UA, VN, WO); FPRS; EPO; JPO; DERWENT; IBM_TDB)	OR	ON	ON	2023/03/07 08:36 AM
L213	0	(L203 L204 L205) AND (((fish flex$3) adj2 tape) WITH (length size dimension width range distance) WITH (first adj2 (end$3 terminal point node location)) WITH (second adj2 (end$3 terminal point node location)))	(US-PGPUB; USPAT; USOCR; FIT (AP, AT, AU, BE, BG, BR, BY, CA, CH, CN, CS, CU, CZ, DD, DE, DK, EA, EE, EP, ES, FI, FR, GB, HR, HU, ID, IE, IL, IS, IT, JP, KR, LT, LU, LV, MA, MC, MD, MY, NL, NO, NZ, OA, PH, PL, PT, RO, RS, RU, SE, SG, SI, SK, SU, TH, TN, TR, TW, UA, VN, WO); FPRS; EPO; JPO; DERWENT; IBM_TDB)	OR	ON	ON	2023/03/07 08:41 AM
L214	4	L210 AND (((fish flex$3) adj2 tape) WITH (length size dimension width range distance) WITH (first adj2 (end$3 terminal point node location)) WITH	(US-PGPUB; USPAT; USOCR; FIT (AP, AT, AU, BE, BG, BR, BY, CA, CH, CN, CS, CU, CZ, DD, DE, DK, EA, EE, EP, ES, FI, FR, GB, HR, HU, ID, IE, IL, IS,	OR	ON	ON	2023/03/07 08:41 AM

		(second adj2 (end$3 terminal point node location)))	IT, JP, KR, LT, LU, LV, MA, MC, MD, MY, NL, NO, NZ, OA, PH, PL, PT, RO, RS, RU, SE, SG, SI, SK, SU, TH, TN, TR, TW, UA, VN, WO); FPRS; EPO; JPO; DERWENT; IBM_TDB)				
L215	0	L211 AND (((donut ring circle doughnut annulus circular annular) adj2 (frame fixture structure form shap$3 enclose receptacle container holder reservoir enclosure infrastructure chassis housing house framework shell chamber tank envelope box case tube cassette socket body cavity)) WITH (sidewall sidebore bore wall) WITH radial$2 WITH (hole opening aperture orifice outlet entrance port recess window through thru) WITH (circumference perimeter border borderline (boundary adj2 line) delimitation))	(US-PGPUB; USPAT; USOCR; FIT (AP, AT, AU, BE, BG, BR, BY, CA, CH, CN, CS, CU, CZ, DD, DE, DK, EA, EE, EP, ES, FI, FR, GB, HR, HU, ID, IE, IL, IS, IT, JP, KR, LT, LU, LV, MA, MC, MD, MY, NL, NO, NZ, OA, PH, PL, PT, RO, RS, RU, SE, SG, SI, SK, SU, TH, TN, TR, TW, UA, VN, WO); FPRS; EPO; JPO; DERWENT; IBM_TDB)	OR	ON	ON	2023/03/07 08:59 AM
L216	0	L212 AND (((donut ring circle doughnut annulus circular annular) adj2 (frame fixture structure form shap$3 enclose receptacle container holder reservoir enclosure infrastructure chassis housing house framework shell chamber tank envelope box case tube cassette socket body cavity)) WITH (sidewall sidebore bore wall) WITH radial$2 WITH (hole opening aperture orifice outlet entrance port recess window through thru) WITH (circumference perimeter border borderline (boundary adj2 line) delimitation))	(US-PGPUB; USPAT; USOCR; FIT (AP, AT, AU, BE, BG, BR, BY, CA, CH, CN, CS, CU, CZ, DD, DE, DK, EA, EE, EP, ES, FI, FR, GB, HR, HU, ID, IE, IL, IS, IT, JP, KR, LT, LU, LV, MA, MC, MD, MY, NL, NO, NZ, OA, PH, PL, PT, RO, RS, RU, SE, SG, SI, SK, SU, TH, TN, TR, TW, UA, VN, WO); FPRS; EPO; JPO; DERWENT; IBM_TDB)	OR	ON	ON	2023/03/07 08:59 AM

L217	3	L214 AND (((donut ring circle doughnut annulus circular annular) adj2 (frame fixture structure form shap$3 enclose receptacle container holder reservoir enclosure infrastructure chassis housing house framework shell chamber tank envelope box case tube cassette socket body cavity)) WITH (sidewall sidebore bore wall) WITH radial$2 WITH (hole opening aperture orifice outlet entrance port recess window through thru) WITH (circumference perimeter border borderline (boundary adj2 line) delimitation))	(US-PGPUB; USPAT; USOCR; FIT (AP, AT, AU, BE, BG, BR, BY, CA, CH, CN, CS, CU, CZ, DD, DE, DK, EA, EE, EP, ES, FI, FR, GB, HR, HU, ID, IE, IL, IS, IT, JP, KR, LT, LU, LV, MA, MC, MD, MY, NL, NO, NZ, OA, PH, PL, PT, RO, RS, RU, SE, SG, SI, SK, SU, TH, TN, TR, TW, UA, VN, WO); FPRS; EPO; JPO; DERWENT; IBM_TDB)	OR	ON	ON	2023/03/07 08:59 AM
L218	0	(L190 L191 L192 L194 L195 L196 L197 L198) AND (((donut ring circle doughnut annulus circular annular) adj2 (frame fixture structure form shap$3 enclose receptacle container holder reservoir enclosure infrastructure chassis housing house framework shell chamber tank envelope box case tube cassette socket body cavity)) WITH (sidewall sidebore bore wall) WITH radial$2 WITH (hole opening aperture orifice outlet entrance port recess window through thru) WITH (circumference perimeter border borderline (boundary adj2 line) delimitation))	(US-PGPUB; USPAT; USOCR; FIT (AP, AT, AU, BE, BG, BR, BY, CA, CH, CN, CS, CU, CZ, DD, DE, DK, EA, EE, EP, ES, FI, FR, GB, HR, HU, ID, IE, IL, IS, IT, JP, KR, LT, LU, LV, MA, MC, MD, MY, NL, NO, NZ, OA, PH, PL, PT, RO, RS, RU, SE, SG, SI, SK, SU, TH, TN, TR, TW, UA, VN, WO); FPRS; EPO; JPO; DERWENT; IBM_TDB)	OR	ON	ON	2023/03/07 08:59 AM
L219	0	(L199 L200 L201 L202) AND (((donut ring circle doughnut annulus circular annular) adj2 (frame fixture structure form shap$3 enclose receptacle container	(US-PGPUB; USPAT; USOCR; FIT (AP, AT, AU, BE, BG, BR, BY, CA, CH, CN, CS, CU, CZ, DD, DE, DK, EA, EE, EP, ES, FI, FR, GB, HR, HU, ID, IE, IL, IS,	OR	ON	ON	2023/03/07 09:00 AM

		holder reservoir enclosure infrastructure chassis housing house framework shell chamber tank envelope box case tube cassette socket body cavity)) WITH (sidewall sidebore bore wall) WITH radial$2 WITH (hole opening aperture orifice outlet entrance port recess window through thru) WITH (circumference perimeter border borderline (boundary adj2 line) delimitation))	IT, JP, KR, LT, LU, LV, MA, MC, MD, MY, NL, NO, NZ, OA, PH, PL, PT, RO, RS, RU, SE, SG, SI, SK, SU, TH, TN, TR, TW, UA, VN, WO); FPRS; EPO; JPO; DERWENT; IBM_TDB)				
L220	0	(L203 L204 L205) AND (((donut ring circle doughnut annulus circular annular) adj2 (frame fixture structure form shap$3 enclose receptacle container holder reservoir enclosure infrastructure chassis housing house framework shell chamber tank envelope box case tube cassette socket body cavity)) WITH (sidewall sidebore bore wall) WITH radial$2 WITH (hole opening aperture orifice outlet entrance port recess window through thru) WITH (circumference perimeter border borderline (boundary adj2 line) delimitation))	(US-PGPUB; USPAT; USOCR; FIT (AP, AT, AU, BE, BG, BR, BY, CA, CH, CN, CS, CU, CZ, DD, DE, DK, EA, EE, EP, ES, FI, FR, GB, HR, HU, ID, IE, IL, IS, IT, JP, KR, LT, LU, LV, MA, MC, MD, MY, NL, NO, NZ, OA, PH, PL, PT, RO, RS, RU, SE, SG, SI, SK, SU, TH, TN, TR, TW, UA, VN, WO); FPRS; EPO; JPO; DERWENT; IBM_TDB)	OR	ON	ON	2023/03/07 09:00 AM
L221	3	L217 AND ((sidewall sidebore bore wall) WITH (clear transparent crystal) WITH (luminescent adj2 (material substance media medium substrate sheet film micro$1film seal$3 coat$3 protect$3 layer pad wafer lamina plane cover screen compound)) WITH light)	(US-PGPUB; USPAT; USOCR; FIT (AP, AT, AU, BE, BG, BR, BY, CA, CH, CN, CS, CU, CZ, DD, DE, DK, EA, EE, EP, ES, FI, FR, GB, HR, HU, ID, IE, IL, IS, IT, JP, KR, LT, LU, LV, MA, MC, MD, MY, NL, NO, NZ, OA, PH, PL, PT, RO, RS, RU, SE, SG, SI, SK, SU, TH, TN, TR, TW, UA, VN, WO); FPRS; EPO;	OR	ON	ON	2023/03/07 09:03 AM

			JPO; DERWENT; IBM_TDB)				
L222	0	(L190 L191 L192 L194 L195 L196 L197 L198) AND ((sidewall sidebore bore wall) WITH (clear transparent crystal) WITH (luminescent adj2 (material substance media medium substrate sheet film micro$1film seal$3 coat$3 protect$3 layer pad wafer lamina plane cover screen compound)) WITH light)	(US-PGPUB; USPAT; USOCR; FIT (AP, AT, AU, BE, BG, BR, BY, CA, CH, CN, CS, CU, CZ, DD, DE, DK, EA, EE, EP, ES, FI, FR, GB, HR, HU, ID, IE, IL, IS, IT, JP, KR, LT, LU, LV, MA, MC, MD, MY, NL, NO, NZ, OA, PH, PL, PT, RO, RS, RU, SE, SG, SI, SK, SU, TH, TN, TR, TW, UA, VN, WO); FPRS; EPO; JPO; DERWENT; IBM_TDB)	OR	ON	ON	2023/03/07 09:03 AM
L223	0	(L199 L200 L201 L202) AND ((sidewall sidebore bore wall) WITH (clear transparent crystal) WITH (luminescent adj2 (material substance media medium substrate sheet film micro$1film seal$3 coat$3 protect$3 layer pad wafer lamina plane cover screen compound)) WITH light)	(US-PGPUB; USPAT; USOCR; FIT (AP, AT, AU, BE, BG, BR, BY, CA, CH, CN, CS, CU, CZ, DD, DE, DK, EA, EE, EP, ES, FI, FR, GB, HR, HU, ID, IE, IL, IS, IT, JP, KR, LT, LU, LV, MA, MC, MD, MY, NL, NO, NZ, OA, PH, PL, PT, RO, RS, RU, SE, SG, SI, SK, SU, TH, TN, TR, TW, UA, VN, WO); FPRS; EPO; JPO; DERWENT; IBM_TDB)	OR	ON	ON	2023/03/07 09:03 AM
L224	0	(L203 L204 L205) AND ((sidewall sidebore bore wall) WITH (clear transparent crystal) WITH (luminescent adj2 (material substance media medium substrate sheet film micro$1film seal$3 coat$3 protect$3 layer pad wafer lamina plane cover screen compound)) WITH light)	(US-PGPUB; USPAT; USOCR; FIT (AP, AT, AU, BE, BG, BR, BY, CA, CH, CN, CS, CU, CZ, DD, DE, DK, EA, EE, EP, ES, FI, FR, GB, HR, HU, ID, IE, IL, IS, IT, JP, KR, LT, LU, LV, MA, MC, MD, MY, NL, NO, NZ, OA, PH, PL, PT, RO, RS, RU, SE, SG, SI, SK, SU, TH, TN, TR, TW, UA, VN, WO); FPRS; EPO; JPO; DERWENT; IBM_TDB)	OR	ON	ON	2023/03/07 09:04 AM
L225	1	(((fish flex$3) adj2 tape) WITH (length size dimension width range distance) WITH (first adj2 (end$3 terminal point node location))	(US-PGPUB; USPAT; USOCR; FIT (AP, AT, AU, BE, BG, BR, BY, CA, CH, CN, CS, CU, CZ, DD, DE, DK, EA, EE, EP, ES, FI, FR, GB,	OR	ON	ON	2023/03/07 09:11 AM

		WITH (second adj2 (end$3 terminal point node location))) AND @ad<"20191126" AND @pd>"20220919"	HR, HU, ID, IE, IL, IS, IT, JP, KR, LT, LU, LV, MA, MC, MD, MY, NL, NO, NZ, OA, PH, PL, PT, RO, RS, RU, SE, SG, SI, SK, SU, TH, TN, TR, TW, UA, VN, WO); FPRS; EPO; JPO; DERWENT; IBM_TDB)				
L226	3	((sidewall sidebore bore wall) WITH (clear transparent crystal) WITH (luminescent adj2 (material substance media medium substrate sheet film micro$1film seal$3 coat$3 protect$3 layer pad wafer lamina plane cover screen compound)) WITH light) AND @ad<"20191126" AND @pd>"20220919"	(US-PGPUB; USPAT; USOCR; FIT (AP, AT, AU, BE, BG, BR, BY, CA, CH, CN, CS, CU, CZ, DD, DE, DK, EA, EE, EP, ES, FI, FR, GB, HR, HU, ID, IE, IL, IS, IT, JP, KR, LT, LU, LV, MA, MC, MD, MY, NL, NO, NZ, OA, PH, PL, PT, RO, RS, RU, SE, SG, SI, SK, SU, TH, TN, TR, TW, UA, VN, WO); FPRS; EPO; JPO; DERWENT; IBM_TDB)	OR	ON	ON	2023/03/07 09:12 AM
L227	18	(((donut ring circle doughnut annulus circular annular) adj2 (frame fixture structure form shap$3 enclose receptacle container holder reservoir enclosure infrastructure chassis housing house framework shell chamber tank envelope box case tube cassette socket body cavity)) WITH (sidewall sidebore bore wall) WITH radial$2 WITH (hole opening aperture orifice outlet entrance port recess window through thru) WITH (circumference perimeter border borderline (boundary adj2 line) delimitation)) AND @ad<"20191126" AND @pd>"20220919"	(US-PGPUB; USPAT; USOCR; FIT (AP, AT, AU, BE, BG, BR, BY, CA, CH, CN, CS, CU, CZ, DD, DE, DK, EA, EE, EP, ES, FI, FR, GB, HR, HU, ID, IE, IL, IS, IT, JP, KR, LT, LU, LV, MA, MC, MD, MY, NL, NO, NZ, OA, PH, PL, PT, RO, RS, RU, SE, SG, SI, SK, SU, TH, TN, TR, TW, UA, VN, WO); FPRS; EPO; JPO; DERWENT; IBM_TDB)	OR	ON	ON	2023/03/07 09:15 AM
L228	0	L225 AND L226 AND L227	(US-PGPUB; USPAT; USOCR; FIT (AP, AT, AU, BE, BG, BR, BY, CA, CH, CN, CS, CU, CZ, DD, DE, DK, EA,	OR	ON	ON	2023/03/07 09:15 AM

			EE, EP, ES, FI, FR, GB, HR, HU, ID, IE, IL, IS, IT, JP, KR, LT, LU, LV, MA, MC, MD, MY, NL, NO, NZ, OA, PH, PL, PT, RO, RS, RU, SE, SG, SI, SK, SU, TH, TN, TR, TW, UA, VN, WO); FPRS; EPO; JPO; DERWENT; IBM_TDB)				
L229	0	L225 AND L226	(US-PGPUB; USPAT; USOCR; FIT (AP, AT, AU, BE, BG, BR, BY, CA, CH, CN, CS, CU, CZ, DD, DE, DK, EA, EE, EP, ES, FI, FR, GB, HR, HU, ID, IE, IL, IS, IT, JP, KR, LT, LU, LV, MA, MC, MD, MY, NL, NO, NZ, OA, PH, PL, PT, RO, RS, RU, SE, SG, SI, SK, SU, TH, TN, TR, TW, UA, VN, WO); FPRS; EPO; JPO; DERWENT; IBM_TDB)	OR	ON	ON	2023/03/07 09:15 AM
L230	0	L225 AND L227	(US-PGPUB; USPAT; USOCR; FIT (AP, AT, AU, BE, BG, BR, BY, CA, CH, CN, CS, CU, CZ, DD, DE, DK, EA, EE, EP, ES, FI, FR, GB, HR, HU, ID, IE, IL, IS, IT, JP, KR, LT, LU, LV, MA, MC, MD, MY, NL, NO, NZ, OA, PH, PL, PT, RO, RS, RU, SE, SG, SI, SK, SU, TH, TN, TR, TW, UA, VN, WO); FPRS; EPO; JPO; DERWENT; IBM_TDB)	OR	ON	ON	2023/03/07 09:15 AM
L231	0	L226 AND L227	(US-PGPUB; USPAT; USOCR; FIT (AP, AT, AU, BE, BG, BR, BY, CA, CH, CN, CS, CU, CZ, DD, DE, DK, EA, EE, EP, ES, FI, FR, GB, HR, HU, ID, IE, IL, IS, IT, JP, KR, LT, LU, LV, MA, MC, MD, MY, NL, NO, NZ, OA, PH, PL, PT, RO, RS, RU, SE, SG, SI, SK, SU, TH, TN, TR, TW, UA, VN, WO); FPRS; EPO;	OR	ON	ON	2023/03/07 09:15 AM

			JPO; DERWENT; IBM_TDB)				
L232	0	(254/134.3R.ccls.) AND @ad<"20191126" AND @pd>"20220919"	(US-PGPUB; USPAT; USOCR; FIT (AP, AT, AU, BE, BG, BR, BY, CA, CH, CN, CS, CU, CZ, DD, DE, DK, EA, EE, EP, ES, FI, FR, GB, HR, HU, ID, IE, IL, IS, IT, JP, KR, LT, LU, LV, MA, MC, MD, MY, NL, NO, NZ, OA, PH, PL, PT, RO, RS, RU, SE, SG, SI, SK, SU, TH, TN, TR, TW, UA, VN, WO); FPRS; EPO; JPO; DERWENT; IBM_TDB)	OR	ON	ON	2023/03/07 02:05 PM
L233	0	(254/134.3FT.ccls.) AND @ad<"20191126" AND @pd>"20220919"	(US-PGPUB; USPAT; USOCR; FIT (AP, AT, AU, BE, BG, BR, BY, CA, CH, CN, CS, CU, CZ, DD, DE, DK, EA, EE, EP, ES, FI, FR, GB, HR, HU, ID, IE, IL, IS, IT, JP, KR, LT, LU, LV, MA, MC, MD, MY, NL, NO, NZ, OA, PH, PL, PT, RO, RS, RU, SE, SG, SI, SK, SU, TH, TN, TR, TW, UA, VN, WO); FPRS; EPO; JPO; DERWENT; IBM_TDB)	OR	ON	ON	2023/03/07 02:05 PM

PE2E SEARCH - Search History (Interference)

Ref #	Hits	Search Query	DBs	Default Operator	Plurals	British Equivalents	Time Stamp
N19	0	((((fish flex$3) adj2 tape) WITH (length size dimension width range distance) WITH (first adj2 (end$3 terminal point node location)) WITH (second adj2 (end$3 terminal point node location))).clm.) AND @pd>"20220919"	(US-PGPUB; USPAT)	OR	ON	ON	2023/03/07 09:16 AM
N20	2	((((donut ring circle doughnut annulus circular annular) adj2 (frame fixture structure form shap$3 enclose receptacle container holder reservoir	(US-PGPUB; USPAT)	OR	ON	ON	2023/03/07 09:17 AM

		enclosure infrastructure chassis housing house framework shell chamber tank envelope box case tube cassette socket body cavity)) WITH (sidewall sidebore bore wall) WITH radial$2 WITH (hole opening aperture orifice outlet entrance port recess window through thru) WITH (circumference perimeter border borderline (boundary adj2 line) delimitation)).clm.) AND @pd>"20220919"					
N21	0	(((sidewall sidebore bore wall) WITH (clear transparent crystal) WITH (luminescent adj2 (material substance media medium substrate sheet film micro$1film seal$3 coat$3 protect$3 layer pad wafer lamina plane cover screen compound)) WITH light).clm.) AND @pd>"20220919"	(US-PGPUB; USPAT)	OR	ON	ON	2023/03/07 09:17 AM

Bibliographic Data

Application No: 16/696,383

Foreign Priority claimed: ○ Yes ◉ No

35 USC 119 (a-d) conditions met: ☐ Yes ☑ No | ☐ Met After Allowance

Verified and Acknowledged: /HOAI-AN D. NGUYEN/ |
Examiner's Signature | Initials

Title: GLOW FISH TAPE SYSTEM

FILING or 371(c) DATE	CLASS	GROUP ART UNIT	ATTORNEY DOCKET NO.
11/26/2019	254	2858	751391
RULE			

APPLICANTS

Klein Tools, Inc., Lincolnshire, IL, UNITED STATES

INVENTORS

Daniel R. Pearson, Fortworth, TX, UNITED STATES

CONTINUING DATA

FOREIGN APPLICATIONS

IF REQUIRED, FOREIGN LICENSE GRANTED**

12/17/2019

STATE OR COUNTRY

UNITED STATES

ADDRESS

LEYDIG VOIT & MAYER, LTD (Klein Tools)
TWO PRUDENTIAL PLAZA, SUITE 4900
180 NORTH STETSON AVENUE
CHICAGO, IL 60601-6731
UNITED STATES

FILING FEE RECEIVED

$1,720

UNITED STATES PATENT AND TRADEMARK OFFICE

UNITED STATES DEPARTMENT OF COMMERCE
United States Patent and Trademark Office
Address: COMMISSIONER FOR PATENTS
P.O. Box 1450
Alexandria, Virginia 22313-1450
www.uspto.gov

NOTICE OF ALLOWANCE AND FEE(S) DUE

161268 7590 03/10/2023
LEYDIG VOIT & MAYER, LTD (Klein Tools)
TWO PRUDENTIAL PLAZA, SUITE 4900
180 NORTH STETSON AVENUE
CHICAGO, IL 60601-6731

EXAMINER
NGUYEN, HOAI AN D

ART UNIT	PAPER NUMBER
2858	

DATE MAILED: 03/10/2023

APPLICATION NO.	FILING DATE	FIRST NAMED INVENTOR	ATTORNEY DOCKET NO.	CONFIRMATION NO.
16/696,383	11/26/2019	Daniel R. Pearson	751391	6816

TITLE OF INVENTION: GLOW FISH TAPE SYSTEM

APPLN. TYPE	ENTITY STATUS	ISSUE FEE DUE	PUBLICATION FEE DUE	PREV. PAID ISSUE FEE	TOTAL FEE(S) DUE	DATE DUE
nonprovisional	UNDISCOUNTED	$1200	$0.00	$0.00	$1200	06/12/2023

THE APPLICATION IDENTIFIED ABOVE HAS BEEN EXAMINED AND IS ALLOWED FOR ISSUANCE AS A PATENT. PROSECUTION ON THE MERITS IS CLOSED. THIS NOTICE OF ALLOWANCE IS NOT A GRANT OF PATENT RIGHTS. THIS APPLICATION IS SUBJECT TO WITHDRAWAL FROM ISSUE AT THE INITIATIVE OF THE OFFICE OR UPON PETITION BY THE APPLICANT. SEE 37 CFR 1.313 AND MPEP 1308.

THE ISSUE FEE AND PUBLICATION FEE (IF REQUIRED) MUST BE PAID WITHIN THREE MONTHS FROM THE MAILING DATE OF THIS NOTICE OR THIS APPLICATION SHALL BE REGARDED AS ABANDONED. THIS STATUTORY PERIOD CANNOT BE EXTENDED. SEE 35 U.S.C. 151. THE ISSUE FEE DUE INDICATED ABOVE DOES NOT REFLECT A CREDIT FOR ANY PREVIOUSLY PAID ISSUE FEE IN THIS APPLICATION. IF AN ISSUE FEE HAS PREVIOUSLY BEEN PAID IN THIS APPLICATION (AS SHOWN ABOVE), THE RETURN OF PART B OF THIS FORM WILL BE CONSIDERED A REQUEST TO REAPPLY THE PREVIOUSLY PAID ISSUE FEE TOWARD THE ISSUE FEE NOW DUE.

HOW TO REPLY TO THIS NOTICE:

I. Review the ENTITY STATUS shown above. If the ENTITY STATUS is shown as SMALL or MICRO, verify whether entitlement to that entity status still applies.

If the ENTITY STATUS is the same as shown above, pay the TOTAL FEE(S) DUE shown above.

If the ENTITY STATUS is changed from that shown above, on PART B - FEE(S) TRANSMITTAL, complete section number 5 titled "Change in Entity Status (from status indicated above)".

For purposes of this notice, small entity fees are 40% the amount of undiscounted fees, and micro entity fees are 20% the amount of undiscounted fees.

II. PART B - FEE(S) TRANSMITTAL, or its equivalent, must be completed and returned to the United States Patent and Trademark Office (USPTO) with your ISSUE FEE and PUBLICATION FEE (if required). If you are charging the fee(s) to your deposit account, section "4b" of Part B - Fee(s) Transmittal should be completed. If an equivalent of Part B is filed, a request to reapply a previously paid issue fee must be clearly made, and delays in processing may occur due to the difficulty in recognizing the paper as an equivalent of Part B.

III. All communications regarding this application must give the application number. Please direct all communications prior to issuance to Mail Stop ISSUE FEE unless advised to the contrary.

IMPORTANT REMINDER: Maintenance fees are due in utility patents issuing on applications filed on or after Dec. 12, 1980. It is patentee's responsibility to ensure timely payment of maintenance fees when due. More information is available at www.uspto.gov/PatentMaintenanceFees.

PTOL-85 (Rev. 02/11)

PART B - FEE(S) TRANSMITTAL

Complete and send this form, together with applicable fee(s), by mail or fax, or via EFS-Web.

By mail, send to: Mail Stop ISSUE FEE
Commissioner for Patents
P.O. Box 1450
Alexandria, Virginia 22313-1450

By fax, send to: (571)-273-2885

INSTRUCTIONS: This form should be used for transmitting the ISSUE FEE and PUBLICATION FEE (if required). Blocks 1 through 5 should be completed where appropriate. All further correspondence including the Patent, advance orders and notification of maintenance fees will be mailed to the current correspondence address as indicated unless corrected below or directed otherwise in Block 1, by (a) specifying a new correspondence address; and/or (b) indicating a separate "FEE ADDRESS" for maintenance fee notifications.

CURRENT CORRESPONDENCE ADDRESS (Note: Use Block 1 for any change of address)

161268 7590 03/10/2023
LEYDIG VOIT & MAYER, LTD (Klein Tools)
TWO PRUDENTIAL PLAZA, SUITE 4900
180 NORTH STETSON AVENUE
CHICAGO, IL 60601-6731

Note: A certificate of mailing can only be used for domestic mailings of the Fee(s) Transmittal. This certificate cannot be used for any other accompanying papers. Each additional paper, such as an assignment or formal drawing, must have its own certificate of mailing or transmission.

Certificate of Mailing or Transmission

I hereby certify that this Fee(s) Transmittal is being deposited with the United States Postal Service with sufficient postage for first class mail in an envelope addressed to the Mail Stop ISSUE FEE address above, or being transmitted to the USPTO via EFS-Web or by facsimile to (571) 273-2885, on the date below.

(Typed or printed name)
(Signature)
(Date)

APPLICATION NO.	FILING DATE	FIRST NAMED INVENTOR	ATTORNEY DOCKET NO.	CONFIRMATION NO.
16/696,383	11/26/2019	Daniel R. Pearson	751391	6816

TITLE OF INVENTION: GLOW FISH TAPE SYSTEM

APPLN. TYPE	ENTITY STATUS	ISSUE FEE DUE	PUBLICATION FEE DUE	PREV. PAID ISSUE FEE	TOTAL FEE(S) DUE	DATE DUE
nonprovisional	UNDISCOUNTED	$1200	$0.00	$0.00	$1200	06/12/2023

EXAMINER	ART UNIT	CLASS-SUBCLASS
NGUYEN, HOAI AN D	2858	254-1343FT

1. Change of correspondence address or indication of "Fee Address" (37 CFR 1.363).

❑ Change of correspondence address (or Change of Correspondence Address form PTO/AIA/122 or PTO/SB/122) attached.

❑ "Fee Address" indication (or "Fee Address" Indication form PTO/AIA/47 or PTO/SB/47; Rev 03-02 or more recent) attached. **Use of a Customer Number is required.**

2. For printing on the patent front page, list
(1) The names of up to 3 registered patent attorneys or agents OR, alternatively,
(2) The name of a single firm (having as a member a registered attorney or agent) and the names of up to 2 registered patent attorneys or agents. If no name is listed, no name will be printed.

1_____
2_____
3_____

3. ASSIGNEE NAME AND RESIDENCE DATA TO BE PRINTED ON THE PATENT (print or type)

PLEASE NOTE: Unless an assignee is identified below, no assignee data will appear on the patent. If an assignee is identified below, the document must have been previously recorded, or filed for recordation, as set forth in 37 CFR 3.11 and 37 CFR 3.81(a). Completion of this form is NOT a substitute for filing an assignment.

(A) NAME OF ASSIGNEE (B) RESIDENCE: (CITY and STATE OR COUNTRY)

Please check the appropriate assignee category or categories (will not be printed on the patent) : ❑ Individual ❑ Corporation or other private group entity ❑ Government

4a. Fees submitted: ❑Issue Fee ❑Publication Fee (if required) ❑Advance Order - # of Copies _____

4b. Method of Payment: *(Please first reapply any previously paid fee shown above)*

❑ Electronic Payment via EFS-Web ❑ Enclosed check ❑ Non-electronic payment by credit card (Attach form PTO-2038)

❑ The Director is hereby authorized to charge the required fee(s), any deficiency, or credit any overpayment to Deposit Account No. _____

5. **Change in Entity Status** (from status indicated above)

❑ Applicant certifying micro entity status. See 37 CFR 1.29

❑ Applicant asserting small entity status. See 37 CFR 1.27

❑ Applicant changing to regular undiscounted fee status.

NOTE: Absent a valid certification of Micro Entity Status (see forms PTO/SB/15A and 15B), issue fee payment in the micro entity amount will not be accepted at the risk of application abandonment.
NOTE: If the application was previously under micro entity status, checking this box will be taken to be a notification of loss of entitlement to micro entity status.
NOTE: Checking this box will be taken to be a notification of loss of entitlement to small or micro entity status, as applicable.

NOTE: This form must be signed in accordance with 37 CFR 1.31 and 1.33. See 37 CFR 1.4 for signature requirements and certifications.

Authorized Signature _____ Date _____

Typed or printed name _____ Registration No. _____

Milwaukee Electric Tool Corporation
Ex-1015
Page 215 of 237

UNITED STATES PATENT AND TRADEMARK OFFICE

UNITED STATES DEPARTMENT OF COMMERCE
United States Patent and Trademark Office
Address: COMMISSIONER FOR PATENTS
P.O. Box 1450
Alexandria, Virginia 22313-1450
www.uspto.gov

APPLICATION NO.	FILING DATE	FIRST NAMED INVENTOR	ATTORNEY DOCKET NO.	CONFIRMATION NO.
16/696,383	11/26/2019	Daniel R. Pearson	751391	6816

161268 7590 03/10/2023
LEYDIG VOIT & MAYER, LTD (Klein Tools)
TWO PRUDENTIAL PLAZA, SUITE 4900
180 NORTH STETSON AVENUE
CHICAGO, IL 60601-6731

EXAMINER
NGUYEN, HOAI AN D

ART UNIT	PAPER NUMBER
2858	

DATE MAILED: 03/10/2023

Determination of Patent Term Adjustment under 35 U.S.C. 154 (b)
(Applications filed on or after May 29, 2000)

The Office has discontinued providing a Patent Term Adjustment (PTA) calculation with the Notice of Allowance.

Section 1(h)(2) of the AIA Technical Corrections Act amended 35 U.S.C. 154(b)(3)(B)(i) to eliminate the requirement that the Office provide a patent term adjustment determination with the notice of allowance. See Revisions to Patent Term Adjustment, 78 Fed. Reg. 19416, 19417 (Apr. 1, 2013). Therefore, the Office is no longer providing an initial patent term adjustment determination with the notice of allowance. The Office will continue to provide a patent term adjustment determination with the Issue Notification Letter that is mailed to applicant approximately three weeks prior to the issue date of the patent, and will include the patent term adjustment on the patent. Any request for reconsideration of the patent term adjustment determination (or reinstatement of patent term adjustment) should follow the process outlined in 37 CFR 1.705.

Any questions regarding the Patent Term Extension or Adjustment determination should be directed to the Office of Patent Legal Administration at (571)-272-7702. Questions relating to issue and publication fee payments should be directed to the Customer Service Center of the Office of Patent Publication at 1-(888)-786-0101 or (571)-272-4200.

OMB Clearance and PRA Burden Statement for PTOL-85 Part B

The Paperwork Reduction Act (PRA) of 1995 requires Federal agencies to obtain Office of Management and Budget approval before requesting most types of information from the public. When OMB approves an agency request to collect information from the public, OMB (i) provides a valid OMB Control Number and expiration date for the agency to display on the instrument that will be used to collect the information and (ii) requires the agency to inform the public about the OMB Control Number's legal significance in accordance with 5 CFR 1320.5(b).

The information collected by PTOL-85 Part B is required by 37 CFR 1.311. The information is required to obtain or retain a benefit by the public which is to file (and by the USPTO to process) an application. Confidentiality is governed by 35 U.S.C. 122 and 37 CFR 1.14. This collection is estimated to take 30 minutes to complete, including gathering, preparing, and submitting the completed application form to the USPTO. Time will vary depending upon the individual case. Any comments on the amount of time you require to complete this form and/or suggestions for reducing this burden, should be sent to the Chief Information Officer, U.S. Patent and Trademark Office, U.S. Department of Commerce, P.O. Box 1450, Alexandria, Virginia 22313-1450. DO NOT SEND FEES OR COMPLETED FORMS TO THIS ADDRESS. SEND TO: Commissioner for Patents, P.O. Box 1450, Alexandria, Virginia 22313-1450. Under the Paperwork Reduction Act of 1995, no persons are required to respond to a collection of information unless it displays a valid OMB control number.

Privacy Act Statement

The Privacy Act of 1974 (P.L. 93-579) requires that you be given certain information in connection with your submission of the attached form related to a patent application or patent. Accordingly, pursuant to the requirements of the Act, please be advised that: (1) the general authority for the collection of this information is 35 U.S.C. 2(b)(2); (2) furnishing of the information solicited is voluntary; and (3) the principal purpose for which the information is used by the U.S. Patent and Trademark Office is to process and/or examine your submission related to a patent application or patent. If you do not furnish the requested information, the U.S. Patent and Trademark Office may not be able to process and/or examine your submission, which may result in termination of proceedings or abandonment of the application or expiration of the patent.

The information provided by you in this form will be subject to the following routine uses:

1. The information on this form will be treated confidentially to the extent allowed under the Freedom of Information Act (5 U.S.C. 552) and the Privacy Act (5 U.S.C 552a). Records from this system of records may be disclosed to the Department of Justice to determine whether disclosure of these records is required by the Freedom of Information Act.
2. A record from this system of records may be disclosed, as a routine use, in the course of presenting evidence to a court, magistrate, or administrative tribunal, including disclosures to opposing counsel in the course of settlement negotiations.
3. A record in this system of records may be disclosed, as a routine use, to a Member of Congress submitting a request involving an individual, to whom the record pertains, when the individual has requested assistance from the Member with respect to the subject matter of the record.
4. A record in this system of records may be disclosed, as a routine use, to a contractor of the Agency having need for the information in order to perform a contract. Recipients of information shall be required to comply with the requirements of the Privacy Act of 1974, as amended, pursuant to 5 U.S.C. 552a(m).
5. A record related to an International Application filed under the Patent Cooperation Treaty in this system of records may be disclosed, as a routine use, to the International Bureau of the World Intellectual Property Organization, pursuant to the Patent Cooperation Treaty.
6. A record in this system of records may be disclosed, as a routine use, to another federal agency for purposes of National Security review (35 U.S.C. 181) and for review pursuant to the Atomic Energy Act (42 U.S.C. 218(c)).
7. A record from this system of records may be disclosed, as a routine use, to the Administrator, General Services, or his/her designee, during an inspection of records conducted by GSA as part of that agency's responsibility to recommend improvements in records management practices and programs, under authority of 44 U.S.C. 2904 and 2906. Such disclosure shall be made in accordance with the GSA regulations governing inspection of records for this purpose, and any other relevant (i.e., GSA or Commerce) directive. Such disclosure shall not be used to make determinations about individuals.
8. A record from this system of records may be disclosed, as a routine use, to the public after either publication of the application pursuant to 35 U.S.C. 122(b) or issuance of a patent pursuant to 35 U.S.C. 151. Further, a record may be disclosed, subject to the limitations of 37 CFR 1.14, as a routine use, to the public if the record was filed in an application which became abandoned or in which the proceedings were terminated and which application is referenced by either a published application, an application open to public inspection or an issued patent.
9. A record from this system of records may be disclosed, as a routine use, to a Federal, State, or local law enforcement agency, if the USPTO becomes aware of a violation or potential violation of law or regulation.

Notice of Allowability	Application No. 16/696,383	Applicant(s) Pearson, Daniel R.	
	Examiner HOAI-AN D NGUYEN	Art Unit 2858	AIA (FITF) Status Yes

-- The MAILING DATE of this communication appears on the cover sheet with the correspondence address--

All claims being allowable, PROSECUTION ON THE MERITS IS (OR REMAINS) CLOSED in this application. If not included herewith (or previously mailed), a Notice of Allowance (PTOL-85) or other appropriate communication will be mailed in due course. **THIS NOTICE OF ALLOWABILITY IS NOT A GRANT OF PATENT RIGHTS.** This application is subject to withdrawal from issue at the initiative of the Office or upon petition by the applicant. See 37 CFR 1.313 and MPEP 1308.

1. ☑ This communication is responsive to RCE filed on February 27, 2023.
   ☐ A declaration(s)/affidavit(s) under **37 CFR 1.130(b)** was/were filed on _____.

2. ☐ An election was made by the applicant in response to a restriction requirement set forth during the interview on _____; the restriction requirement and election have been incorporated into this action.

3. ☑ The allowed claim(s) is/are 1-4,6-13 and 15-20 . As a result of the allowed claim(s), you may be eligible to benefit from the **Patent Prosecution Highway** program at a participating intellectual property office for the corresponding application. For more information , please see **http://www.uspto.gov/patents/init_events/pph/index.jsp** or send an inquiry to **PPHfeedback@uspto.gov.**

4. ☐ Acknowledgment is made of a claim for foreign priority under 35 U.S.C. § 119(a)-(d) or (f).

   Certified copies:

   a) ☐All b) ☐ Some* c) ☐ None of the:

   1. ☐ Certified copies of the priority documents have been received.
   2. ☐ Certified copies of the priority documents have been received in Application No. _____ .
   3. ☐ Copies of the certified copies of the priority documents have been received in this national stage application from the International Bureau (PCT Rule 17.2(a)).

   * Certified copies not received: _____ .

Applicant has THREE MONTHS FROM THE "MAILING DATE" of this communication to file a reply complying with the requirements noted below. Failure to timely comply will result in ABANDONMENT of this application.
THIS THREE-MONTH PERIOD IS NOT EXTENDABLE.

5. ☐ CORRECTED DRAWINGS (as "replacement sheets") must be submitted.
   ☐ including changes required by the attached Examiner's Amendment / Comment or in the Office action of Paper No./Mail Date _____ .

   Identifying indicia such as the application number (see 37 CFR 1.84(c)) should be written on the drawings in the front (not the back) of each sheet. Replacement sheet(s) should be labeled as such in the header according to 37 CFR 1.121(d).

6. ☐ DEPOSIT OF and/or INFORMATION about the deposit of BIOLOGICAL MATERIAL must be submitted. Note the attached Examiner's comment regarding REQUIREMENT FOR THE DEPOSIT OF BIOLOGICAL MATERIAL.

Attachment(s)

1. ☐ Notice of References Cited (PTO-892)
2. ☐ Information Disclosure Statements (PTO/SB/08), Paper No./Mail Date _____.
3. ☐ Examiner's Comment Regarding Requirement for Deposit of Biological Material _____.
4. ☐ Interview Summary (PTO-413), Paper No./Mail Date. _____.
5. ☐ Examiner's Amendment/Comment
6. ☑ Examiner's Statement of Reasons for Allowance
7. ☐ Other _____.

/HOAI-AN D. NGUYEN/
Primary Examiner, Art Unit 2858

DETAILED ACTION

Notice of Pre-AIA or AIA Status

1. The present application, filed on or after March 16, 2013, is being examined under the first inventor to file provisions of the AIA.

Continued Examination Under 37 CFR 1.114

2. A request for continued examination under 37 CFR 1.114, including the fee set forth in 37 CFR 1.17(e), was filed in this application after final rejection. Since this application is eligible for continued examination under 37 CFR 1.114, and the fee set forth in 37 CFR 1.17(e) has been timely paid, the finality of the previous Office action has been withdrawn pursuant to 37 CFR 1.114. Applicant's submission filed on February 27, 2023 has been entered. Accordingly, claims 5 and 14 are cancelled; claims 1-4, 6-13 and 15-20 are currently pending in the application.

Allowable Subject Matter

3. Claims 1-4, 6-13 and 15-20 are allowed.

4. The following is an examiner's statement of reasons for allowance:

With regard to claims 1, 7 and 16, applicants' arguments in the second paragraph at page 6 of 7 of the Remarks and amendments have been considered and found persuasive.

With regard to claims 2-4, 6, 8-13, 15 and 17-20, these claims are allowed at least by virtue of their dependencies directly or indirectly from the base claims, respectively.

Any comments considered necessary by applicant must be submitted no later than the payment of the issue fee and, to avoid processing delays, should preferably accompany the issue fee. Such submissions should be clearly labeled "Comments on Statement of Reasons for Allowance."

CONTACT INFORMATION

5. Any inquiry concerning this communication or earlier communications from the examiner should be directed to HOAI-AN D. NGUYEN whose telephone number is (571) 272-2170. The examiner can normally be reached MON-THURS (7:00 AM - 5:00 PM).

Examiner interviews are available via telephone, in-person, and video conferencing using a USPTO supplied web-based collaboration tool. To schedule an interview, applicant is encouraged to use the USPTO Automated Interview Request (AIR) at http://www.uspto.gov/interviewpractice.

If attempts to reach the examiner by telephone are unsuccessful, the examiner's supervisor, PATRICK J. ASSOUAD can be reached on 571-272-2210. The fax phone number for the organization where this application or proceeding is assigned is 571-273-8300.

Information regarding the status of published or unpublished applications may be obtained from Patent Center. Unpublished application information in Patent Center is available to registered users. To file and manage patent submissions in Patent Center, visit: https://patentcenter.uspto.gov. Visit https://www.uspto.gov/patents/apply/patent-center for more information about Patent Center and https://www.uspto.gov/patents/docx for information about filing in DOCX format. For additional questions, contact the Electronic Business Center (EBC) at 866-217-9197 (toll-free). If you would like assistance from a USPTO Customer Service Representative, call 800-786-9199 (IN USA OR CANADA) or 571-272-1000.

HOAI-AN D. NGUYEN
Primary Examiner
Art Unit 2858

/HOAI-AN D. NGUYEN/
Primary Examiner, Art Unit 2858

PTO/AIA/80 (07-17)
Approved for use through 03/31/2021. OMB 0651-0035
U.S. Patent and Trademark Office; U.S. DEPARTMENT OF COMMERCE
Under the Paperwork Reduction Act of 1995, no person is required to respond to a collection of information unless it displays a valid OMB control number

POWER OF ATTORNEY TO PROSECUTE APPLICATIONS BEFORE THE USPTO

I hereby revoke all previous powers of attorney given in the application identified in the attached statement under 37 CFR 3.73(c).

I hereby appoint:

[X] Practitioners associated with Customer Number: 144588

OR

[ ] Practitioner(s) named below (if more than ten patent practitioners are to be named, then a customer number must be used):

Name	Registration Number	Name	Registration Number

As attorney(s) or agent(s) to represent the undersigned before the United States Patent and Trademark Office (USPTO) in connection with any and all patent applications assigned only to the undersigned according to the USPTO assignment records or assignment documents attached to this form in accordance with 37 CFR 3.73(c).

Please change the correspondence address for the application identified in the attached statement under 37 CFR 3.73(c) to:

[ ] The address associated with Customer Number:

OR

[ ]

Firm or individual name		
Address		
City	State	Zip
Country		
Telephone	Email	

Assignee name and address: Klein Tools, Inc.
450 Bond Street, Lincolnshire, Illinois 60069

A copy of this form, together with a statement under 37 CFR 3.73(c) (Form PTO/AIA/96 or equivalent) is required to be filed in each application in which this form is used. The statement under 37 CFR 3.73(c) may be completed by one of the practitioners appointed in this form, and must identify the application in which this Power of Attorney is to be filed.

SIGNATURE of Assignee of Record

The individual whose signature and title is supplied below is authorized to act on behalf of the assignee.

Signature /Robert J. Vechiola/	Date April, 20, 2021
Name Robert J. Vechiola	Telephone 847-821-5551
Title V.P., General Counsel & Corporate Secretary	

This collection of information is required by 37 CFR 1.31, 1.32, and 1.33. The information is required to obtain or retain a benefit by the public, which is to update (and by the USPTO to process) the file of a patent or reexamination proceeding. Confidentiality is governed by 35 U.S.C. 122 and 37 CFR 1.11 and 1.14. This collection is estimated to take 18 minutes to complete, including gathering, preparing, and submitting the completed application form to the USPTO. Time will vary depending upon the individual case. Any comments on the amount of time you require to complete this form and/or suggestions for reducing this burden, should be sent to the Chief Information Officer, U.S. Patent and Trademark Office, U.S. Department of Commerce, P.O. Box 1450, Alexandria, VA 22313-1450. DO NOT SEND FEES OR COMPLETED FORMS TO THIS ADDRESS. **SEND TO: Commissioner for Patents, P.O. Box 1450, Alexandria, VA 22313-1450.**
If you need assistance in completing the form, call 1-800-PTO-9199 and select option 2.

Privacy Act Statement

The **Privacy Act of 1974 (P.L. 93-579)** requires that you be given certain information in connection with your submission of the attached form related to a patent application or patent. Accordingly, pursuant to the requirements of the Act, please be advised that: (1) the general authority for the collection of this information is 35 U.S.C. 2(b)(2); (2) furnishing of the information solicited is voluntary; and (3) the principal purpose for which the information is used by the U.S. Patent and Trademark Office is to process and/or examine your submission related to a patent application or patent. If you do not furnish the requested information, the U.S. Patent and Trademark Office may not be able to process and/or examine your submission, which may result in termination of proceedings or abandonment of the application or expiration of the patent.

The information provided by you in this form will be subject to the following routine uses:

1. The information on this form will be treated confidentially to the extent allowed under the Freedom of Information Act (5 U.S.C. 552) and the Privacy Act (5 U.S.C 552a). Records from this system of records may be disclosed to the Department of Justice to determine whether disclosure of these records is required by the Freedom of Information Act.
2. A record from this system of records may be disclosed, as a routine use, in the course of presenting evidence to a court, magistrate, or administrative tribunal, including disclosures to opposing counsel in the course of settlement negotiations.
3. A record in this system of records may be disclosed, as a routine use, to a Member of Congress submitting a request involving an individual, to whom the record pertains, when the individual has requested assistance from the Member with respect to the subject matter of the record.
4. A record in this system of records may be disclosed, as a routine use, to a contractor of the Agency having need for the information in order to perform a contract. Recipients of information shall be required to comply with the requirements of the Privacy Act of 1974, as amended, pursuant to 5 U.S.C. 552a(m).
5. A record related to an International Application filed under the Patent Cooperation Treaty in this system of records may be disclosed, as a routine use, to the International Bureau of the World Intellectual Property Organization, pursuant to the Patent Cooperation Treaty.
6. A record in this system of records may be disclosed, as a routine use, to another federal agency for purposes of National Security review (35 U.S.C. 181) and for review pursuant to the Atomic Energy Act (42 U.S.C. 218(c)).
7. A record from this system of records may be disclosed, as a routine use, to the Administrator, General Services, or his/her designee, during an inspection of records conducted by GSA as part of that agency's responsibility to recommend improvements in records management practices and programs, under authority of 44 U.S.C. 2904 and 2906. Such disclosure shall be made in accordance with the GSA regulations governing inspection of records for this purpose, and any other relevant (*i.e.*, GSA or Commerce) directive. Such disclosure shall not be used to make determinations about individuals.
8. A record from this system of records may be disclosed, as a routine use, to the public after either publication of the application pursuant to 35 U.S.C. 122(b) or issuance of a patent pursuant to 35 U.S.C. 151. Further, a record may be disclosed, subject to the limitations of 37 CFR 1.14, as a routine use, to the public if the record was filed in an application which became abandoned or in which the proceedings were terminated and which application is referenced by either a published application, an application open to public inspection or an issued patent.
9. A record from this system of records may be disclosed, as a routine use, to a Federal, State, or local law enforcement agency, if the USPTO becomes aware of a violation or potential violation of law or regulation.

Electronic Patent Application Fee Transmittal

Application Number:	16696383
Filing Date:	26-Nov-2019
Title of Invention:	GLOW FISH TAPE SYSTEM
First Named Inventor/Applicant Name:	Daniel R. Pearson
Filer:	Jeffery Neal Fairchild
Attorney Docket Number:	751391

Filed as Large Entity

Filing Fees for Utility under 35 USC 111(a)

Description	Fee Code	Quantity	Amount	Sub-Total in USD($)
Basic Filing:				
Pages:				
Claims:				
Miscellaneous-Filing:				
Petition:				
Patent-Appeals-and-Interference:				
Post-Allowance-and-Post-Issuance:				
UTILITY APPL ISSUE FEE	1501	1	1200	1200

Description	Fee Code	Quantity	Amount	Sub-Total in USD($)
Extension-of-Time:				
Miscellaneous:				
		Total in USD ($)		**1200**

Electronic Acknowledgement Receipt	
EFS ID:	48128427
Application Number:	16696383
International Application Number:	
Confirmation Number:	6816
Title of Invention:	GLOW FISH TAPE SYSTEM
First Named Inventor/Applicant Name:	Daniel R. Pearson
Customer Number:	161268
Filer:	Jeffery Neal Fairchild
Filer Authorized By:	
Attorney Docket Number:	751391
Receipt Date:	09-JUN-2023
Filing Date:	26-NOV-2019
Time Stamp:	12:17:32
Application Type:	Utility under 35 USC 111(a)

Payment information:

Submitted with Payment	yes
Payment Type	DA
Payment was successfully received in RAM	$1200
RAM confirmation Number	E202369C18187412
Deposit Account	602056
Authorized User	Jeffery Fairchild
The Director of the USPTO is hereby authorized to charge indicated fees and credit any overpayment as follows: 37 CFR 1.16 (National application filing, search, and examination fees) 37 CFR 1.17 (Patent application and reexamination processing fees)	

37 CFR 1.21 (Miscellaneous fees and charges)

File Listing:

Document Number	Document Description	File Name	File Size(Bytes)/ Message Digest	Multi Part /.zip	Pages (if appl.)
1	Issue Fee Payment (PTO-85B)	00058P00USIssueFeeTransmittal.pdf	2615262 eaa5819ccf69d6654a2e5495f7f502cf17528177	no	1
Warnings:					
Information:					
2	Assignee showing of ownership per 37 CFR 3.73	00058P00USOwnerStatement373.pdf	740240 4b8eab37d5a7d5717c6e65dca026a275adc9923d	no	3
Warnings:					
Information:					
3	Power of Attorney	PowerOfAttorneyForCustomerNumber144588.pdf	184272 33aef836107785fb9e6aa03902100a7501edec5b	no	2
Warnings:					
Information:					
4	Fee Worksheet (SB06)	fee-info.pdf	37796 b32eb36f5b9e195872cc7dfa40973145b84dca28	no	2
Warnings:					
Information:					
			Total Files Size (in bytes):	3577570	

This Acknowledgement Receipt evidences receipt on the noted date by the USPTO of the indicated documents, characterized by the applicant, and including page counts, where applicable. It serves as evidence of receipt similar to a Post Card, as described in MPEP 503.

New Applications Under 35 U.S.C. 111
If a new application is being filed and the application includes the necessary components for a filing date (see 37 CFR 1.53(b)-(d) and MPEP 506), a Filing Receipt (37 CFR 1.54) will be issued in due course and the date shown on this Acknowledgement Receipt will establish the filing date of the application.
National Stage of an International Application under 35 U.S.C. 371
If a timely submission to enter the national stage of an international application is compliant with the conditions of 35 U.S.C. 371 and other applicable requirements a Form PCT/DO/EO/903 indicating acceptance of the application as a national stage submission under 35 U.S.C. 371 will be issued in addition to the Filing Receipt, in due course.
New International Application Filed with the USPTO as a Receiving Office
If a new international application is being filed and the international application includes the necessary components for an international filing date (see PCT Article 11 and MPEP 1810), a Notification of the International Application Number and of the International Filing Date (Form PCT/RO/105) will be issued in due course, subject to prescriptions concerning national security, and the date shown on this Acknowledgement Receipt will establish the international filing date of the application.

PART B - FEE(S) TRANSMITTAL

Complete and send this form, together with applicable fee(s), by mail or fax, or via EFS-Web.

By mail, send to: Mail Stop ISSUE FEE
Commissioner for Patents
P.O. Box 1450
Alexandria, Virginia 22313-1450

By fax, send to: (571)-273-2885

INSTRUCTIONS: This form should be used for transmitting the ISSUE FEE and PUBLICATION FEE (if required). Blocks 1 through 5 should be completed where appropriate. All further correspondence including the Patent, advance orders and notification of maintenance fees will be mailed to the current correspondence address as indicated unless corrected below or directed otherwise in Block 1, by (a) specifying a new correspondence address; and/or (b) indicating a separate "FEE ADDRESS" for maintenance fee notifications.

CURRENT CORRESPONDENCE ADDRESS (Note: Use Block 1 for any change of address)

161268 7590 03/10/2023

LEYDIG VOIT & MAYER, LTD (Klein Tools)
TWO PRUDENTIAL PLAZA, SUITE 4900
180 NORTH STETSON AVENUE
CHICAGO, IL 60601-6731

Note: A certificate of mailing can only be used for domestic mailings of the Fee(s) Transmittal. This certificate cannot be used for any other accompanying papers. Each additional paper, such as an assignment or formal drawing, must have its own certificate of mailing or transmission.

Certificate of Mailing or Transmission

I hereby certify that this Fee(s) Transmittal is being deposited with the United States Postal Service with sufficient postage for first class mail in an envelope addressed to the Mail Stop ISSUE FEE address above, or being transmitted to the USPTO via EFS-Web or by facsimile to (571) 273-2885, on the date below.

(Typed or printed name)

(Signature)

(Date)

APPLICATION NO.	FILING DATE	FIRST NAMED INVENTOR	ATTORNEY DOCKET NO.	CONFIRMATION NO.
16/696,383	11/26/2019	Daniel R. Pearson	751391	6816

TITLE OF INVENTION: GLOW FISH TAPE SYSTEM

APPLN. TYPE	ENTITY STATUS	ISSUE FEE DUE	PUBLICATION FEE DUE	PREV. PAID ISSUE FEE	TOTAL FEE(S) DUE	DATE DUE
nonprovisional	UNDISCOUNTED	$1200	$0.00	$0.00	$1200	06/12/2023

EXAMINER	ART UNIT	CLASS-SUBCLASS
NGUYEN, HOAI AN D	2858	254-1342FT

1. Change of correspondence address or indication of "Fee Address" (37 CFR 1.363).

☐ Change of correspondence address (or Change of Correspondence Address form PTO/AIA/122 or PTO/SB/122) attached.

☐ "Fee Address" indication (or "Fee Address" Indication form PTO/AIA/47 or PTO/SB/47; Rev 03-02 or more recent) attached. Use of a **Customer Number is required.**

2. For printing on the patent front page, list
(1) The names of up to 3 registered patent attorneys or agents OR, alternatively,
(2) The name of a single firm (having as a member a registered attorney or agent) and the names of up to 2 registered patent attorneys or agents. If no name is listed, no name will be printed.

1. _____
2. _____
3. _____

3. ASSIGNEE NAME AND RESIDENCE DATA TO BE PRINTED ON THE PATENT (print or type)

PLEASE NOTE: Unless an assignee is identified below, no assignee data will appear on the patent. If an assignee is identified below, the document must have been previously recorded, or filed for recordation, as set forth in 37 CFR 3.11 and 37 CFR 3.81(a). Completion of this form is NOT a substitute for filing an assignment.

(A) NAME OF ASSIGNEE: Klein Tools, Inc

(B) RESIDENCE: (CITY and STATE OR COUNTRY): Lincolnshire, Illinois

Please check the appropriate assignee category or categories (will not be printed on the patent): ☐ Individual ☒ Corporation or other private group entity ☐ Government

4a. Fees submitted: ☒ Issue Fee ☐ Publication Fee (if required) ☐ Advance Order - # of Copies _____

4b. Method of Payment: *(Please first reapply any previously paid fee shown above)*

☒ Electronic Payment via EFS-Web ☐ Enclosed check ☐ Non-electronic payment by credit card (Attach form PTO-2038)

☐ The Director is hereby authorized to charge the required fee(s), any deficiency, or credit any overpayment to Deposit Account No. _____

5. **Change in Entity Status** (from status indicated above)

☐ Applicant certifying micro entity status. See 37 CFR 1.29

☐ Applicant asserting small entity status. See 37 CFR 1.27

☐ Applicant changing to regular undiscounted fee status.

NOTE: Absent a valid certification of Micro Entity Status (see forms PTO/SB/15A and 15B), issue fee payment in the micro entity amount will not be accepted at the risk of application abandonment.
NOTE: If the application was previously under micro entity status, checking this box will be taken to be a notification of loss of entitlement to micro entity status.
NOTE: Checking this box will be taken to be a notification of loss of entitlement to small or micro entity status, as applicable.

NOTE: This form must be signed in accordance with 37 CFR 1.31 and 1.33. See 37 CFR 1.4 for signature requirements and certifications.

Authorized Signature [signature] Date 6-9-2023

Typed or printed name Jeffery N Fairchild Registration No. 37825

PTOL-85 Part B (08-18) Approved for use through 01/31/2020 OMB 0651-0033 U.S. Patent and Trademark Office; U.S. DEPARTMENT OF COMMERCE

PTO/AIA/96 (08-12)
Approved for use through 11/30/2020. OMB 0651-0031
U.S. Patent and Trademark Office; U.S. DEPARTMENT OF COMMERCE
Under the Paperwork Reduction Act of 1995, no persons are required to respond to a collection of information unless it displays a valid OMB control number.

STATEMENT UNDER 37 CFR 3.73(c)

Applicant/Patent Owner: Klein Tools, Inc.

Application No./Patent No.: 16/696,383 Filed/Issue Date: 11/26/2019

Titled: GLOW FISH TAPE SYSTEM

Klein Tools, Inc., a corporation

(Name of Assignee) (Type of Assignee, e.g., corporation, partnership, university, government agency, etc.)

states that, for the patent application/patent identified above, it is (choose **one** of options 1, 2, 3 or 4 below):

1. ☑ The assignee of the entire right, title, and interest.

2. ☐ An assignee of less than the entire right, title, and interest (check applicable box):

☐ The extent (by percentage) of its ownership interest is _____%. Additional Statement(s) by the owners holding the balance of the interest must be submitted to account for 100% of the ownership interest.

☐ There are unspecified percentages of ownership. The other parties, including inventors, who together own the entire right, title and interest are:

Additional Statement(s) by the owner(s) holding the balance of the interest must be submitted to account for the entire right, title, and interest.

3. ☐ The assignee of an undivided interest in the entirety (a complete assignment from one of the joint inventors was made). The other parties, including inventors, who together own the entire right, title, and interest are:

Additional Statement(s) by the owner(s) holding the balance of the interest must be submitted to account for the entire right, title, and interest.

4. ☐ The recipient, via a court proceeding or the like (*e.g.*, bankruptcy, probate), of an undivided interest in the entirety (a complete transfer of ownership interest was made). The certified document(s) showing the transfer is attached.

The interest identified in option 1, 2 or 3 above (not option 4) is evidenced by either (choose **one** of options A or B below):

A. ☑ An assignment from the inventor(s) of the patent application/patent identified above. The assignment was recorded in the United States Patent and Trademark Office at Reel 058520, Frame 0517, or for which a copy thereof is attached.

B. ☐ A chain of title from the inventor(s), of the patent application/patent identified above, to the current assignee as follows:

1. From: _____ To: _____

The document was recorded in the United States Patent and Trademark Office at

Reel _____, Frame _____, or for which a copy thereof is attached.

2. From: _____ To: _____

The document was recorded in the United States Patent and Trademark Office at

Reel _____, Frame _____, or for which a copy thereof is attached.

This collection of information is required by 37 CFR 3.73(b). The information is required to obtain or retain a benefit by the public which is to file (and by the USPTO to process) an application. Confidentiality is governed by 35 U.S.C. 122 and 37 CFR 1.11 and 1.14. This collection is estimated to take 12 minutes to complete, including gathering, preparing, and submitting the completed application form to the USPTO. Time will vary depending upon the individual case. Any comments on the amount of time you require to complete this form and/or suggestions for reducing this burden, should be sent to the Chief Information Officer, U.S. Patent and Trademark Office, U.S. Department of Commerce, P.O. Box 1450, Alexandria, VA 22313-1450. DO NOT SEND FEES OR COMPLETED FORMS TO THIS ADDRESS. **SEND TO: Commissioner for Patents, P.O. Box 1450, Alexandria, VA 22313-1450**.

If you need assistance in completing the form, call 1-800-PTO-9199 and select option 2.

PTO/AIA/96 (08-12)
Approved for use through 11/30/2020. OMB 0651-0031
U.S. Patent and Trademark Office; U.S. DEPARTMENT OF COMMERCE
Under the Paperwork Reduction Act of 1995, no persons are required to respond to a collection of information unless it displays a valid OMB control number.

STATEMENT UNDER 37 CFR 3.73(c)

3. From: _____ To: _____

The document was recorded in the United States Patent and Trademark Office at

Reel _____, Frame _____, or for which a copy thereof is attached.

4. From: _____ To: _____

The document was recorded in the United States Patent and Trademark Office at

Reel _____, Frame _____, or for which a copy thereof is attached.

5. From: _____ To: _____

The document was recorded in the United States Patent and Trademark Office at

Reel _____, Frame _____, or for which a copy thereof is attached.

6. From: _____ To: _____

The document was recorded in the United States Patent and Trademark Office at

Reel _____, Frame _____, or for which a copy thereof is attached.

☐ Additional documents in the chain of title are listed on a supplemental sheet(s).

☑ As required by 37 CFR 3.73(c)(1)(i), the documentary evidence of the chain of title from the original owner to the assignee was, or concurrently is being, submitted for recordation pursuant to 37 CFR 3.11.

[NOTE: A separate copy (i.e., a true copy of the original assignment document(s)) must be submitted to Assignment Division in accordance with 37 CFR Part 3, to record the assignment in the records of the USPTO. See MPEP 302.08]

The undersigned (whose title is supplied below) is authorized to act on behalf of the assignee.

/JEFFERY N FAIRCHILD/	06/09/2023
Signature	Date
Jeffery Fairchild	37825
Printed or Typed Name	Title or Registration Number

Privacy Act Statement

The **Privacy Act of 1974 (P.L. 93-579)** requires that you be given certain information in connection with your submission of the attached form related to a patent application or patent. Accordingly, pursuant to the requirements of the Act, please be advised that: (1) the general authority for the collection of this information is 35 U.S.C. 2(b)(2); (2) furnishing of the information solicited is voluntary; and (3) the principal purpose for which the information is used by the U.S. Patent and Trademark Office is to process and/or examine your submission related to a patent application or patent. If you do not furnish the requested information, the U.S. Patent and Trademark Office may not be able to process and/or examine your submission, which may result in termination of proceedings or abandonment of the application or expiration of the patent.

The information provided by you in this form will be subject to the following routine uses:

1. The information on this form will be treated confidentially to the extent allowed under the Freedom of Information Act (5 U.S.C. 552) and the Privacy Act (5 U.S.C 552a). Records from this system of records may be disclosed to the Department of Justice to determine whether disclosure of these records is required by the Freedom of Information Act.
2. A record from this system of records may be disclosed, as a routine use, in the course of presenting evidence to a court, magistrate, or administrative tribunal, including disclosures to opposing counsel in the course of settlement negotiations.
3. A record in this system of records may be disclosed, as a routine use, to a Member of Congress submitting a request involving an individual, to whom the record pertains, when the individual has requested assistance from the Member with respect to the subject matter of the record.
4. A record in this system of records may be disclosed, as a routine use, to a contractor of the Agency having need for the information in order to perform a contract. Recipients of information shall be required to comply with the requirements of the Privacy Act of 1974, as amended, pursuant to 5 U.S.C. 552a(m).
5. A record related to an International Application filed under the Patent Cooperation Treaty in this system of records may be disclosed, as a routine use, to the International Bureau of the World Intellectual Property Organization, pursuant to the Patent Cooperation Treaty.
6. A record in this system of records may be disclosed, as a routine use, to another federal agency for purposes of National Security review (35 U.S.C. 181) and for review pursuant to the Atomic Energy Act (42 U.S.C. 218(c)).
7. A record from this system of records may be disclosed, as a routine use, to the Administrator, General Services, or his/her designee, during an inspection of records conducted by GSA as part of that agency's responsibility to recommend improvements in records management practices and programs, under authority of 44 U.S.C. 2904 and 2906. Such disclosure shall be made in accordance with the GSA regulations governing inspection of records for this purpose, and any other relevant (*i.e.*, GSA or Commerce) directive. Such disclosure shall not be used to make determinations about individuals.
8. A record from this system of records may be disclosed, as a routine use, to the public after either publication of the application pursuant to 35 U.S.C. 122(b) or issuance of a patent pursuant to 35 U.S.C. 151. Further, a record may be disclosed, subject to the limitations of 37 CFR 1.14, as a routine use, to the public if the record was filed in an application which became abandoned or in which the proceedings were terminated and which application is referenced by either a published application, an application open to public inspection or an issued patent.
9. A record from this system of records may be disclosed, as a routine use, to a Federal, State, or local law enforcement agency, if the USPTO becomes aware of a violation or potential violation of law or regulation.

UNITED STATES PATENT AND TRADEMARK OFFICE

UNITED STATES DEPARTMENT OF COMMERCE
United States Patent and Trademark Office
Address: COMMISSIONER FOR PATENTS
P.O. Box 1450
Alexandria, Virginia 22313-1450
www.uspto.gov

APPLICATION NUMBER	FILING OR 371(C) DATE	FIRST NAMED APPLICANT	ATTY. DOCKET NO./TITLE
16/696,383	11/26/2019	Daniel R. Pearson	751391

CONFIRMATION NO. 6816

POWER OF ATTORNEY NOTICE

OC000000058563313

161268
LEYDIG VOIT & MAYER, LTD (Klein Tools)
TWO PRUDENTIAL PLAZA, SUITE 4900
180 NORTH STETSON AVENUE
CHICAGO, IL 60601-6731

Date Mailed: 06/22/2023

NOTICE REGARDING CHANGE OF POWER OF ATTORNEY

This is in response to the Power of Attorney filed 06/09/2023.

- The Power of Attorney to you in this application has been revoked by the applicant. Future correspondence will be mailed to the new address of record(37 CFR 1.33).

Questions about the contents of this notice and the requirements it sets forth should be directed to the Office of Data Management, Application Assistance Unit, at **(571) 272-4000** or **(571) 272-4200** or **1-888-786-0101**.

/sleutchit/

UNITED STATES PATENT AND TRADEMARK OFFICE

UNITED STATES DEPARTMENT OF COMMERCE
United States Patent and Trademark Office
Address: COMMISSIONER FOR PATENTS
P.O. Box 1450
Alexandria, Virginia 22313-1450
www.uspto.gov

APPLICATION NUMBER	FILING OR 371(C) DATE	FIRST NAMED APPLICANT	ATTY. DOCKET NO./TITLE
16/696,383	11/26/2019	Daniel R. Pearson	751391

CONFIRMATION NO. 6816

144588
Klein Tools, Inc
450 Bond Street
Lincolnshire, IL 60069

POA ACCEPTANCE LETTER

OC000000058563377

Date Mailed: 06/22/2023

NOTICE OF ACCEPTANCE OF POWER OF ATTORNEY

This is in response to the Power of Attorney filed 06/09/2023.

The Power of Attorney in this application is accepted. Correspondence in this application will be mailed to the above address as provided by 37 CFR 1.33.

Questions about the contents of this notice and the requirements it sets forth should be directed to the Office of Data Management, Application Assistance Unit, at **(571) 272-4000** or **(571) 272-4200** or **1-888-786-0101**.

/sleutchit/

UNITED STATES PATENT AND TRADEMARK OFFICE

UNITED STATES DEPARTMENT OF COMMERCE
United States Patent and Trademark Office
Address: COMMISSIONER FOR PATENTS
P.O. Box 1450
Alexandria, Virginia 22313-1450
www.uspto.gov

APPLICATION NO.	ISSUE DATE	PATENT NO.	ATTORNEY DOCKET NO.	CONFIRMATION NO.
16/696,383	08/01/2023	11713209	751391	6816

144588 7590 07/12/2023

Klein Tools, Inc
450 Bond Street
Lincolnshire, IL 60069

ISSUE NOTIFICATION

The projected patent number and issue date are specified above. The patent will issue electronically. The electronically issued patent is the official patent grant pursuant to 35 U.S.C. § 153. The patent may be accessed on or after the issue date through Patent Center at https://patentcenter.uspto.gov/. The patent will be available in both the public and the private sides of Patent Center. Further assistance in electronically accessing the patent, or about Patent Center, is available by calling the Patent Electronic Business Center at 1-888-217-9197.

The USPTO is implementing electronic patent issuance with a transition period, during which period the USPTO will mail a ceremonial paper copy of the electronic patent grant to the correspondence address of record. Additional copies of the patent (i.e., certified and presentation copies) may be ordered for a fee from the USPTO's Certified Copy Center at https://certifiedcopycenter.uspto.gov/index.html. The Certified Copy Center may be reached at (800)972-6382.

Determination of Patent Term Adjustment under 35 U.S.C. 154 (b)
(application filed on or after May 29, 2000)

The Patent Term Adjustment is 672 day(s). Any patent to issue from the above-identified application will include an indication of the adjustment on the front page.

If a Continued Prosecution Application (CPA) was filed in the above-identified application, the filing date that determines Patent Term Adjustment is the filing date of the most recent CPA.

Applicant will be able to obtain more detailed information by accessing the Patent Application Information Retrieval (PAIR) WEB site (http://pair.uspto.gov).

Any questions regarding the Patent Term Extension or Adjustment determination should be directed to the Office of Patent Legal Administration at (571)-272-7702. Questions relating to issue and publication fee payments should be directed to the Application Assistance Unit (AAU) of the Office of Patents Stakeholder Experience (OPSE), Stakeholder Support Division (SSD) at (571)-272-4200.

INVENTOR(s) (Please see PAIR WEB site http://pair.uspto.gov for additional inventors):

Daniel R. Pearson, Fortworth, TX;

APPLICANT(s) (Please see PAIR WEB site http://pair.uspto.gov for additional applicants):

Klein Tools, Inc., Lincolnshire, IL;

The United States represents the largest, most dynamic marketplace in the world and is an unparalleled location for business investment, innovation, and commercialization of new technologies. The USA offers tremendous resources and advantages for those who invest and manufacture goods here. Through SelectUSA, our nation works to encourage and facilitate business investment. To learn more about why the USA is the best country in the world to develop technology, manufacture products, and grow your business, visit SelectUSA.gov.

UNITED STATES PATENT AND TRADEMARK OFFICE

UNITED STATES DEPARTMENT OF COMMERCE
United States Patent and Trademark Office
Address: COMMISSIONER FOR PATENTS
P.O. Box 1450
Alexandria, Virginia 22313-1450
www.uspto.gov

APPLICATION NO.	FILING DATE	FIRST NAMED INVENTOR	ATTORNEY DOCKET NO.	CONFIRMATION NO.
16/696,383	11/26/2019	Daniel R. Pearson	751391	6816

144588 7590 08/03/2023
Klein Tools, Inc
450 Bond Street
Lincolnshire, IL 60069

EXAMINER
NGUYEN, HOAI AN D

ART UNIT	PAPER NUMBER
2858	

MAIL DATE	DELIVERY MODE
08/03/2023	PAPER

Please find below and/or attached an Office communication concerning this application or proceeding.

The time period for reply, if any, is set in the attached communication.

PTOL-90A (Rev. 04/07)

UNITED STATES PATENT AND TRADEMARK OFFICE

UNITED STATES DEPARTMENT OF COMMERCE
United States Patent and Trademark Office
Address: COMMISSIONER FOR PATENTS
P.O. Box 1450
Alexandria, Virginia 22313-1450
www.uspto.gov

APPLICATION NO.	ISSUE DATE	PATENT NO.
16/696,383	01-Aug-2023	11713209

Klein Tools, Inc
450 Bond Street
Lincolnshire, IL 60069

EGRANT NOTIFICATION

Your electronic patent grant (eGrant) is now available, which can be accessed via Patent Center at https://patentcenter.uspto.gov

The electronic patent grant is the official patent grant under 35 U.S.C. 153. For more information, please visit https://www.uspto.gov/electronicgrants