UNITED STATES PATENT AND TRADEMARK OFFICE

BEFORE THE PATENT TRIAL AND APPEAL BOARD

STRAUMANN USA, LLC,
Petitioner,

v.

SMART DENTURE CONVERSIONS, LLC,
Patent Owner.

Case No. PGR2025–00054

U.S. Patent No. 12,156,781

EXPERT DECLARATION OF JOHN B. BRUNSKI, Ph.D.

TABLE OF CONTENTS

I. INTRODUCTION 1

II. QUALIFICATIONS 2

III. COMPENSATION 10

IV. MATERIALS CONSIDERED 10

V. LEGAL STANDARDS 11

- A. Person of Ordinary Skill in the Art 11
- B. Claim Interpretation 12
- C. Definiteness 12
- D. Prior Art 13
- E. Anticipation 14
- F. Obviousness 14
- G. Effective Filing Date 18
- H. Written Description and Enablement Requirements 18

VI. BACKGROUND AND PRIOR ART 19

- A. The Field of the ’781 Patent 19
- B. Open-Tray and Closed-Tray Impression Techniques 22
- C. Bernhard 26
- D. Poovey 34
- E. Gracco 36
- F. Derey 40

VII. ’781 PATENT 44

- A. Parent Provisional and Utility Applications 44

1. Overview 44

2. Provisional Applications 51

3. Utility Applications 54

B. Prosecution History of the Parent ’992 Patent 56

C. Prosecution History of the ’781 Patent 63

D. ’781 Patent Specification 64

E. ’781 Patent Claims 65

VIII. LEVEL OF ORDINARY SKILL 67

IX. CLAIM INTERPRETATION 68

X. GROUNDS OF UNPATENTABILITY 69

A. Ground 1: Claims 6 and 10–16 Are Indefinite 69

1. Claim 6 Is Indefinite Because It Recites Only Functional Limitations at the Alleged Point of Novelty 69

2. The “Does Not Essentially Match” Limitation of Claims 10–16 Is Indefinite 71

B. Ground 2: Claims 1–16 Are Not Adequately Described or Enabled 76

1. Independent Claims 1, 6, 8 and 10 Are Not Adequately Described or Enabled By the ’781 Patent Specification.....76

a. The ’781 Patent Specification Does Not Support the Full Scope of the Different Thread Pattern Limitations 77

b. The ’781 Patent Specification Does Not Support the Full Scope of the Limitations that Require an Axial Force to Release the Temporary Fastener.....81

2. Dependent Claims 2–5, 7, 9 and 11–16 Are Not Adequately Described or Enabled By the ’781 Patent Specification....87

a. The ’781 Patent Specification Does Not Support the Full Scope of the Different Thread Pattern Limitations....87

b. The ’781 Patent Specification Does Not Support the Full Scope of the Limitations that Require an Axial Force to Release the Temporary Fastener....89

3. The ’781 Patent Specification Does Not Support the “Securing the Coping to the Threads of the Implant Abutment” Limitation of Claims 1–9....91

4. The ’781 Patent Specification Does Not Support the “Does Not Engage the Implant Abutment Threads Continuously” Limitation of Claims 1–9....92

5. The ’781 Patent Specification Does Not Support the “Outer Surface … Deform” Limitation of Claim 5....95

6. The ’781 Patent Specification Does Not Support the “Wherein the Temporary Fastener Is Configured To Release” Limitation of Claim 6....96

7. The ’781 Patent Specification Does Not Support the “Distal Shaft … Configured to Deform” Limitation of Claim 14....97

8. The ’781 Patent Specification Does Not Support the “Smaller … Maximal Width” Limitation of Claim 15....99

C. Ground 3: Claims 10, 12, 15 and 16 Would Have Been Obvious Based on Bernhard In View of Poovey and Gracco....100

1. Motivation to Modify Bernhard In View of Poovey and Gracco....101

2. Claim 10....113

a. Limitation 10(a): A dental system comprising....113

b. Limitation 10(b): an implant abutment having threads having an implant abutment threads contour and an implant abutment longitudinal axis 115

c. Limitation 10(c): a coping having a proximal end with a central aperture 116

d. Limitation 10(d): a temporary fastener having a longitudinal axis with a length measured along the longitudinal axis and a width dimension measured perpendicular to the longitudinal axis, the temporary fastener comprising 119

e. Limitation 10(e): [the temporary fastener comprising:] a head with a proximal end having a drive tool interface sized and configured for rotating the temporary fastener to a predetermined torque, wherein the head resides external to the central aperture of the coping 120

f. Limitation 10(f): [the temporary fastener comprising:] a shaft coupled to or integral with the head that extends through the central aperture of the coping, the shaft comprising:.....122

g. Limitation 10(g): [the shaft comprising: …] a distal portion having an outer surface comprising shaft threading having a shaft threading contour, wherein the shaft threading contour does not essentially match the implant abutment threads contour 122

h. Limitation 10(h): [the shaft comprising: …] a proximal portion with an outer surface devoid of shaft threading 124

i. Limitation 10(i): wherein the temporary fastener is configured so that when the distal shaft portion of the shaft extends through the central aperture of the coping and engages the threads of the implant abutment at a predetermined torque, the shaft threading engages the threads of the implant

abutment whereby the shaft threading cooperates with the threads of the implant abutment and is sized and configured to pull the coping into position with the implant abutment 125

j. Limitation 10(j): wherein the temporary fastener is configured so that in response to application of an axial release force above a predetermined value in a proximal direction, the coping and the temporary fastener are released as a unit from the implant abutment 126

k. Limitation 10(k): wherein the axial force above the predetermined value in the proximal direction is configured to be applied in a pick-up process after the coping is adhesively bonded to a prosthesis or in a closed tray impression process 127

3. Claim 12: The dental system of claim 10, wherein the temporary fastener comprises a polymer. 128

4. Claim 15: The dental system of claim 10, further comprising a definitive screw comprising threads configured to engage the implant abutment, wherein a maximal width of the distal portion of the shaft of the temporary fastener is smaller than a maximal width of the threads of the definitive screw. 129

5. Claim 16: The dental system of claim 10, further comprising a definitive screw comprising threads configured to engage the implant abutment, wherein a profile pattern of the threading of the temporary fastener is configured to define a first abutment contact area with the threads of the implant abutment, wherein a profile pattern of the threads of the definitive screw is configured to define a second abutment contact area with the threads of the implant abutment, and wherein the first abutment contact area is less than the second abutment contact area. 130

D. Ground 4: Claims 1–9, 11, 13 and 14 Would Have Been Obvious Based on Bernhard In View of Poovey, Gracco and Derey 132

1. Motivation to Modify Bernhard In View of Poovey, Gracco and Derey.....132

2. Claim 1 135

a. Limitation 1(a): A dental system comprising 136

b. Limitation 1(b): a coping having a proximal end with an aperture 138

c. Limitation 1(c): an implant abutment having threads.....140

d. Limitation 1(d): a definitive screw having a proximal head end having a tool interface and a distal post portion having threads configured for securing the coping to the threads of the implant abutment, wherein the distal post portion having threads is sized to extend through the aperture of the coping; and.....140

e. Limitation 1(e): a temporary fastener having an axis with a length measured along the axis and a lateral dimension providing different widths along the axis measured perpendicular to the axis, the temporary fastener comprising 142

f. Limitation 1(f): [the temporary fastener comprising:] a proximal portion with a width larger than the coping aperture 144

g. Limitation 1(g): [the temporary fastener comprising:] a shaft comprising a distal shaft portion sized and configured for rotary engagement with the implant abutment threads 144

h. Limitation 1(h): wherein the shaft of the temporary fastener extends through the aperture of the coping

and the distal shaft portion engages the implant abutment threads with an engagement depth at a predetermined torque and is configured to cause the proximal portion of the temporary fastener to hold the coping into alignment with the implant abutment prior to attachment of the definitive screw 146

i. Limitation 1(i): wherein the temporary fastener is configured to release at least a portion of the temporary fastener and the coping from the implant abutment as a unit when an axial release force is applied in a proximal direction to the temporary fastener 148

j. Limitation 1(j): wherein the distal shaft portion is sized and configured so that it does not engage the implant abutment threads continuously between a most distal position of the distal shaft portion and a proximal end of the implant abutment threads 149

k. Limitation 1(k): wherein the distal shaft portion of the temporary fastener comprises threading which is sized and configured to make contact with the implant abutment threads over a first threading contact area to hold the coping against the implant abutment, wherein the distal post portion of the definitive screw is sized and configured to make contact with the implant abutment threads over a second threading contact area to hold the coping against the implant abutment, and wherein the first threading contact area is less than the second threading contact area 150

3. Claim 2: The dental system of claim 1, wherein the distal shaft portion of the temporary fastener comprises asymmetric threading 152

4. Claim 3: The dental system of claim 1, wherein the axial release force in the proximal direction is applied through

a pick-up process in which the coping is bonded and/or adhered to a dental element.....153

5. Claim 4: The dental system of claim 1, wherein the threads of the distal post portion of the definitive screw comprise a continuous form.....155

6. Claim 5: The dental system claim 1, wherein the distal shaft portion of the temporary fastener comprises an outer surface which is sized and configured to deform in response to the axial release force in the proximal direction whereby the at least a portion of the temporary fastener and the coping are released together as a unit.....156

7. Claim 6.....156

a. Limitation 6(a): A dental system comprising: 157

b. Limitation 6(b): a coping having a proximal end with an aperture 157

c. Limitation 6(c): an implant abutment having threads.....157

d. Limitation 6(d): a definitive screw having a proximal head end having a tool interface and a distal post portion having threads for securing the coping to the threads of the implant abutment after processing, wherein the distal post portion having threads is sized to extend through the aperture of the coping.....157

e. Limitation 6(e): a temporary fastener having an axis with a length measured along the axis and a lateral dimension providing different widths along the axis measured perpendicular to the axis, the temporary fastener comprising:.....158

f. Limitation 6(f): [the temporary fastener comprising] a proximal portion with a width larger than the coping aperture 158

g. Limitation 6(g): [the temporary fastener comprising] a shaft comprising a distal shaft portion sized and configured for rotary engagement with the implant abutment threads 158

h. Limitation 6(h): wherein the shaft of the temporary fastener is sized and configured to extend through the aperture of the coping and the distal shaft portion to engage the implant abutment threads with an engagement depth at a predetermined torque and is configured to cause the proximal portion of the temporary fastener to hold the coping into alignment with the implant abutment.....159

i. Limitation 6(i): wherein the temporary fastener is configured to release at least a portion of the temporary fastener and the coping from the implant abutment as a unit in response to an axial release force that is applied only in a proximal direction to the temporary fastener whereby the axial release force is applied without rotation of the temporary fastener 159

j. Limitation 6(j): wherein the distal shaft portion is sized and configured so that it does not engage the implant abutment threads continuously between a most distal position of the distal shaft portion and a proximal end of the implant abutment threads 160

8. Claim 7: The dental system of claim 1, wherein the distal shaft portion of the temporary fastener comprises an open space, and wherein a portion of the axis is located within the open space 160

9. Claim 8 161

a. Limitation 8(a): A dental system comprising: 161

b. Limitation 8(b): a coping having a proximal end with an aperture 161

c. Limitation 8(c): an implant abutment having threads 161

d. Limitation 8(d): a definitive screw having a proximal head end having a tool interface and a distal post portion having threads for securing the coping to the threads of the implant abutment, wherein the distal post portion having threads is sized to extend through the aperture of the coping 162

e. Limitation 8(e): a temporary fastener having an axis with a length measured along the axis and a lateral dimension providing different widths along the axis measured perpendicular to the axis, the temporary fastener comprising: 162

f. Limitation 8(f): [the temporary fastener comprising] a proximal portion with a width larger than the coping aperture 162

g. Limitation 8(g): [the temporary fastener comprising] a shaft comprising a distal shaft portion sized and configured for rotary engagement with the implant abutment threads prior to attachment of the definitive screw 162

h. Limitation 8(h): wherein the shaft of the temporary fastener extends through the aperture of the coping and the distal shaft portion engages the implant abutment threads with an engagement depth at a predetermined torque and is configured to cause the proximal portion of the temporary fastener to hold the coping into alignment with the implant abutment 163

i. Limitation 8(i): wherein the temporary fastener is configured to release at least a portion of the temporary fastener and the coping from the implant abutment as a unit when an axial release force is applied in a proximal direction to the temporary fastener 163

j. Limitation 8(j): wherein the distal shaft portion is sized and configured so that it does not engage the implant abutment threads continuously between a most distal position of the distal shaft portion and a proximal end of the implant abutment threads 164

k. Limitation 8(k): wherein a volume of definitive screw post material of the distal post portion of the definitive screw that is located distally of the proximal end of the implant abutment threads when in position to hold the coping against the implant abutment is greater than a volume of temporary fastener shaft material of the distal shaft portion of the temporary fastener that is located distally of the proximal end of the implant abutment threads when in position to hold the coping against the implant abutment 164

10. Claim 9: The dental system of claim 1, wherein the temporary fastener is polymeric, and wherein the distal shaft portion of the temporary fastener is hollow 166

11. Claim 11: The dental system of claim 10, wherein the shaft threading does not have a continuous threading contour along its path around the longitudinal axis. 167

12. Claim 13: The dental system of claim 10, wherein the temporary fastener comprises a PEEK material. 167

13. Claim 14: The dental system of claim 10, wherein the distal shaft portion of the shaft of the temporary fastener is configured to deform during the application of the axial force in the proximal direction to thereby release the coping and the temporary fastener as the unit from the implant abutment.....170

XI. OBJECTIVE EVIDENCE OF NON-OBVIOUSNESS 171

XII. CONCLUSION.....174

I, John B. Brunski, Ph.D., declare as follows:

I. INTRODUCTION

1. I have been asked by Haug Partners LLP, counsel for Petitioner Straumann USA, LLC ("Petitioner"), to consider and provide my opinions on the technology described and claimed in U.S. Patent No. 12,156,781 (the "'781 patent"), including the technical field of the patent, the knowledge of a person of ordinary skill in the art (a "POSA"), and the scope and content of the prior art. In particular, I have been asked to consider and provide my opinions about whether claims 1–16 of the '781 patent are anticipated by prior art and/or would have been obvious before the effective filing date. I have also been asked to consider and provide my opinions on other issues, including whether claims 1–16 comply with the written description requirement and the enablement requirement in view of the '781 patent specification, whether certain of the claims are indefinite, and whether the commercial product sold by Smart Denture Conversions LLC ("Patent Owner") practices any of the claims of the '781 patent.

2. As discussed in detail below, I have concluded that claims 1–16 of the '781 patent are not supported and are anticipated by prior art and/or would have been obvious before the effective filing date. My opinions, and this declaration, are based on the information currently available to me. I reserve the right to supplement my opinions as new information becomes available, including in

response to any arguments by Patent Owner or any evidence presented by Patent Owner, including any testimony or declaration of any expert submitted on behalf of Patent Owner.

3. I understand that Petitioner will submit this declaration in support of a petition for post grant review of claims 1–16 of the ’781 patent being filed in the Patent Trial and Appeal Board of the U.S. Patent and Trademark Office.

II. QUALIFICATIONS

4. My curriculum vitae, which includes my qualifications as well as a list of the 37 book chapters, 97 peer-reviewed journal articles, and 87 published conference proceedings I have authored, is attached as Appendix C to this declaration.

5. I am currently a Senior Research Engineer in the School of Medicine at Stanford University, where I work in the laboratory of Professor Jill A. Helms on joint research projects involving the biomechanics of bone, soft tissues, and dental implants. My typical activities include biomechanical testing and computational modeling. I also frequently interact with Dr. Helms and laboratory staff to develop publications as well as research proposals for future work. I have held that position at Stanford for the past fifteen years.

6. Prior to my work at Stanford, I was a Professor of Biomedical Engineering at Rensselaer Polytechnic Institute, where I taught both graduate and

undergraduate courses in Engineering, Design, Materials Science, Biomaterials, and Biomechanics for more than thirty years. During this time, I also taught a course at the Mayo Clinic College of Medicine and Science in Rochester, Minnesota, for which I received the William R. Laney Visiting Professor Award from the Division of Prosthodontics in 2006. I am currently Professor Emeritus, in the Department of Biomedical Engineering, at Rensselaer Polytechnic Institute.

7. I earned my Bachelor of Science degree in Metallurgy and Materials Science from the College of Engineering at the University of Pennsylvania in 1970. I received my Master of Science Degree in Materials Science and Engineering from Stanford University in 1972, and my Ph.D. in Metallurgy and Materials Science from the University of Pennsylvania in 1977. My doctoral thesis was entitled "Analysis of the Tissue-Implant Interface of Titanium Blade-Vent Implants in Bone" and was the first doctoral thesis in the field of dental implants to be awarded at an engineering school in the United States. My thesis tested the hypothesis that the early postoperative loading history of an implant – and the associated "stability" of the implant in bone – plays a decisive role in whether bone heals properly around the implant or instead forms a non-bony fibrous tissue. Published in the same year as P-I Brånemark's 1977 landmark study of

osseointegrated dental implants in humans,[1] my thesis work and subsequent publications contributed to a more detailed scientific understanding of the term "osseointegration."

8. I have spent more than forty years researching, consulting, and lecturing in biomaterials and biomechanics of oral and maxillofacial implants. Most of my focus has been on the biology and mechanics of the bone-implant interface along with the related mechanical analysis of intraoral loading of implants and its dependence on the type of prosthesis attached to the implant. I have experience with many of the prosthetic approaches taken by dentists when developing various prosthetic systems. I was named President of the Implantology Research Group, for the International Association for Dental Research (IADR) in 1992.

9. My research interests include the investigation of biomechanical problems that arise in the clinical use of dental implants. For example, in the case of multiple dental implants supporting a full-arch prosthesis in a human jaw, a common problem that clinicians confront is estimating the number and locations of

---

[1] *Osseointegrated Implants in the Treatment of the Edentulous Jaw*, P-I Brånemark, B.O. Hansson, R. Adell et al., Almqvist & Wiksell International, Stockholm, Sweden, 1977.

implants that will support the proposed full-arch prosthesis. Solving this problem requires a method to predict how the biting forces on the prosthesis are transmitted to, and shared among, the multiple implants supporting that prosthesis. Over the years I have developed and tested many such predictive models.

10. Closely related to the above problem area is a related question, namely: "What constitutes safe versus dangerous loading of each individual implant supporting the prosthesis?" Solving that problem is another major focus of my work. It involves analysis of implant size, geometry, and loading along with stress-strain analysis of not only the implant/abutment/prosthesis materials, but also of the surrounding bone and soft "gum" tissue around each implant.

11. I have designed dental implants for prosthetics as an industry consultant on numerous occasions over the past twenty-five years. For example, I worked as a consultant for Nobel Biocare AB, in Göteborg, Sweden, in the late 1990s, where I helped design a slightly tapered, specially-threaded titanium dental implant known as the Mark IV. I have also done work for Nobel Biocare in Zurich, Switzerland, where I assisted in the research and development of a new oral implant system known as the Trefoil™. The advantage of this system is that it can be completed in one day, with the patient leaving the office with a final prosthesis attached to the implants.

12. My consultancy work has included other projects designing dental systems. For example, in 1998, I consulted with the Embed Company (Flemington, New Jersey) on the design of a small-diameter (e.g. 2 mm) dental implant. And in the period between 2009 and 2012, I consulted with the Neoss company (in the United Kingdom) on developing a new tapered dental implant.

13. I also worked as a consultant testing a "snap-on" overdenture prosthesis for Theratechnologies Inc., based in Montreal, Canada, where I performed experiments measuring the forces and moments on dental implants supporting a metal bar and a snapped-on overdenture. The clinician's interest was in quantifying and comparing the level of implant loading during installation and removal of the overdenture as well as during simulated masticatory function of the overdenture. I also collaborated on a similar study involving overdentures, in a project that examined how five different methods of attaching an overdenture to a pair of dental implants affected how the implants were loaded when the overdenture was loaded by simulated biting forces. This study resulted in the paper by Porter, J.A., *et al.*, entitled "Comparison of load distribution for implant overdenture attachments," published in the *International Journal of Oral Maxillofacial Implants*, Volume 17 (2002) at 651–662 (reference 40 on page 14 of my CV).

14. I have extensive experience with threaded fasteners and thread design—not only in the context of screw joints that connect implants to abutments and prostheses, but also in the context of screw thread profiles that help anchor screw-shaped dental implants in surrounding bone. For example, some of my chapters in textbooks on implant dentistry detail how the fastening torque on a typical screw connecting a prosthesis to an abutment relates to the compressive clamping force that holds the screw joint together (e.g. Brunski J.B., "Biomechanics," Chapter 6, *Osseointegration in Dentistry – an Overview*, 2nd edition (2003), 49-83 (reference 24 on page 10 of my CV). A practical illustration of the relevance of this analysis appears in one of my articles: Carr A.B., *et al.*, "Effects of fabrication, finishing, and polishing procedures on preload in prostheses using conventional gold and plastic cylinders," *International Journal of Oral Maxillofacial Implants*, Vol. 11 (1996) at 589–598 (reference 27 on page 13 of my CV). This article examined how the clamping force in the gold screw-gold cylinder screw joint can be seriously compromised if the metal surfaces of that screw joint are damaged during the high-temperature casting procedures used to make the metal substructure of a typical full-arch prosthesis.

15. I am a co-author or contributor to a number of peer-reviewed journal articles about dental implants and dental prostheses, including the publications already listed up to this point in this declaration. Additionally, the following

invited presentation was at an international consensus meeting sponsored by the Foundation for Oral Rehabilitation (FOR), entitled "Consensus: Patient centered rehabilitation of edentulism with an optimal number of implants," at the University of Mainz, Germany, on March 27–28, 2014. The final publication was: Brunski, J.B., "Biomechanical aspects of the optimal number of implants to carry a cross-arch full restoration," *European Journal of Oral Implantology*, Volume 7 (supplement) (2014), S111–S132 (reference 58 on page 15 of my CV).

16. I have written many chapters in textbooks and treatises about dental implants and dental prostheses, including the following:

- Brunski J.B., "Biomechanics", Chapter 6 in *Osseointegration in Dentistry – an Overview*, 2nd edition (Eds: P. Worthington, B. Lang and J. Rubenstein), Quintessence Publishing Co., Inc., Carol Stream, IL, pp. 49-83 (2003);
- Brunski J.B., Glantz P-O., Helms J.A. and Nanci A., "Transfer of mechanical load across the interface", Chapter 10, pp. 209-249 in *The Osseointegration Book*, P-I Brånemark (editorial board S. Chien, H-G Gröndahl and K. Robinson), Quintessenz Verlags-GmbH (2005);
- Brunski J.B., Currey J.A., Helms J.A., Leucht P., Nanci A., and Wazen R., "The healing bone-implant interface: role of micromotion and related strain levels in tissue," Chapter 11 in *Osseointegration and*

Dental Implants (Ed. Asbjorn Jokstad), Wiley-Blackwell, pp. 205-211 (2009);

- Brunski J.B., Currey J.A., Helms J.A., Leucht P., Nanci A., Wazen R., "Implant geometry, interfacial strain, and mechanobiology of oral implants revisited", pp. 45-59 in *Proceedings of the First P-I Brånemark Scientific Symposium*, Gothenburg 2009 (Eds. R. Gottlander and D. van Steenberghe), Quintessence, Surrey, Great Britain (2011);
- Brunski J.B. "Biomechanical perspectives relevant to the use of mini-dental implants", Chapter 4, pp. 35-48 in *Mini Dental Implants: Principles and Practice* (Ed. Victor Sendax), Elsevier Mosby (2013); and
- Brunski, J.B., "Biomechanics of zygoma implants and bone anchorage", Chapter 4, pp. 61-90, in *Understanding Zygoma Implants: Biomechanical, Surgical, and Prosthetic Principles* by Edmond Bedrossian & E. Armand Bedrossian, Quintessence Publishing Company, Inc. Batavia IL, 2024.

(These chapters are listed as references 24, 26, 27, 28, 30 and 36, respectively, on pages 8-11of my CV).

17. I have collaborated directly in multidisciplinary teams to develop medical devices, including dental implants. By this, I mean a team of professionals from different disciplines who can collaborate, and support each other by providing expertise in their particular area of interest. For example, I was the Senior VP and Chief Operating Officer of OsseoConception, LLC, which was a consulting company that I founded together with a long-time research colleague and practicing clinician, Kenji W. Higuchi, DDS MS, an oral & maxillofacial surgeon from Spokane, Washington. As a team, we consulted for both Nobel Biocare and Neoss on a number of dental implant projects.

18. Because of my background as an engineer, and after more than forty-five years researching, designing, and testing dental implants and prostheses, I consider myself to be an expert in the design of dental implants and prostheses.

III. COMPENSATION

19. I am being compensated at my standard hourly rate for my consulting and testimony work, plus expenses. None of my opinions were influenced by my compensation, and my compensation does not depend on me providing any particular opinion or the outcome of this proceeding.

IV. MATERIALS CONSIDERED

20. My opinions are informed by my knowledge and experience in materials science and biomedical engineering, as well as certain case-specific

materials, such as the ’781 patent and the prior art references that I discuss below. A full list of the materials that I considered in forming my opinions is attached as Appendix B to this declaration.

V. LEGAL STANDARDS

21. As a technical expert, I do not offer any legal opinions. However, I understand the legal standards applicable to determining whether claims 1–16 of the ’781 patent are patentable. My understanding of those standards is set forth below, and I applied those standards in developing my technical opinions.

A. Person of Ordinary Skill in the Art

22. I understand that the patentability issues that I address in this declaration, including whether claims 1–16 are anticipated by prior art or would have been obvious before the effective filing date, are to be evaluated from the vantage point of a person of ordinary skill in the art (“POSA”).

23. I understand that this hypothetical POSA is presumed to know all of the relevant prior art before the effective filing date, and has the capability to understand the scientific and engineering principles applicable to the pertinent art.

24. I understand that a POSA is a person of ordinary creativity who is presumed to think in accordance with the conventional wisdom in the art, but is not a person who innovates or invents. I understand that a POSA may be a member of

a team, and thus possess or have access to the education, skills, and experience of other team members.

25. I have been informed that the following factors may be considered in determining the level of ordinary skill in the art: (1) the educational level of the inventors; (2) the type of problems encountered in the art; (3) the prior art solutions to those problems; (4) the rapidity with which innovations are made; (5) the sophistication of the technology; and (6) the educational level of active workers in the field.

26. Below I set forth my opinion regarding the level of ordinary skill in the art applicable to the ’781 patent. My opinions in this declaration are given from the perspective of a POSA, even if not expressly stated as such.

B. Claim Interpretation

27. I understand that the language in a patent claim should be given its ordinary meaning as it would be understood by a POSA after reading the patent.

C. Definiteness

28. I understand that a patent claim is not patentable unless it is definite. To be definite, a patent claim must particularly point out and distinctly claim the subject matter of the invention. A claim is indefinite and therefore unpatentable if, when the claim is read in light of the patent specification and the prosecution

history, the claim fails to inform, with reasonable certainty, those skilled in the art about the scope of the invention.

29. I also understand that a claim is indefinite if it recites only functional limitations at the alleged point of novelty, without any corresponding structural limitations that define the structure of the claimed device that enables the device to perform the recited function.

D. Prior Art

30. I understand that a patent or a printed publication (e.g. a published patent application, a published article, etc.) qualifies as a prior art reference for a given patent claim if the patent or printed publication was available to the public before the effective filing date of the claim. I was not asked to analyze, and do not provide any opinions about, what the effective filing date of claims 1–16 is or whether a particular patent or printed publication qualifies as prior art, because these are legal issues, not technical issues. Instead, I state my understanding of what the effective filing date is and that each of the prior art references discussed below qualifies as prior art, along with my understanding of the reason why in each case.

31. I understand that the prior art that a POSA would consider before the effective filing date consists of not only prior art in the field of endeavor of the patent but also prior art outside the field that is reasonably pertinent to the problem

with which the inventors of the patent were concerned. A reference outside of the field of endeavor is reasonably pertinent if a POSA would have consulted it and applied its teachings when faced with the problem that the inventor was trying to solve.

E. Anticipation

32. I understand that a claim of a patent is not patentable if a single prior art reference "anticipates" the claim. I understand that to anticipate a claim, the single prior art reference must describe the entire subject matter of the claim, i.e. the single reference must disclose each and every element of the claim, either explicitly or inherently. I understand that a prior art reference inherently discloses an element of a claim if the element is necessarily present even though it is not expressly disclosed. I also understand that for a prior art reference to disclose an element of a claim for purposes of anticipation, the disclosure must be an enabling disclosure.

F. Obviousness

33. I understand that, even if a patent claim is not anticipated by a prior art reference because the reference does not disclose all of the elements of the claim, the claim is not patentable if the differences between the claim and the prior art are such that the claimed subject matter as a whole would have been obvious to a POSA before the effective filing date.

34. I understand that analyzing whether a claim would have been obvious involves considering the following factors: (1) determining the scope and content of the prior art; (2) determining the differences between the prior art and the subject matter of the claim; (3) determining the level of ordinary skill in the pertinent art; and (4) considering any objective evidence of non-obviousness.

35. I also understand that in considering obviousness, the prior art should be viewed from the perspective of a POSA before the effective filing date. This vantage point prevents one from using their own insight or hindsight in deciding whether a claim would have been obvious before the effective filing date.

36. I understand that a claim can be determined to have been obvious based on a single prior art reference or a combination of multiple prior art references. I understand that a claim would have been obvious before the effective filing date if a POSA would have had a reason to combine or modify the teachings of one or more prior art references in a manner that would have resulted in the claimed subject matter.

37. I understand that one or more prior art references may provide a teaching, suggestion, motivation, or reason to combine or modify the teachings of the prior art to arrive at the subject matter of the claim. I understand that the reason may also come from other sources, such as the knowledge of a POSA,

common sense, design incentives, or other market forces. I understand that any of the following reasons can support a finding of obviousness:

a. Combining prior art elements according to known methods to yield predictable results;

b. Simple substitution of one known element for another to obtain predictable results;

c. Use of a known technique to improve similar devices, methods, or products in the same way;

d. Applying a known technique to a known device, method, or product ready for improvement to yield predictable results;

e. Applying a technique or approach that would have been "obvious to try", i.e. choosing from a finite number of identified, predictable solutions, with a reasonable expectation of success;

f. Known work in one field of endeavor may prompt variations of it for use in either the same field or a different one based on design incentives or other market forces if the variations would have been predictable to one of ordinary skill in the art;

g. Some teaching, suggestion, or motivation in the prior art that would have led one of ordinary skill to modify the prior art reference or to

combine prior art reference teachings to arrive at the claimed subject matter with a reasonable expectation of success.

38. I understand that in analyzing whether a claim would have been obvious, one may consider inferences and creative steps that a POSA would have employed at the time. I also understand that a POSA is someone of ordinary creativity, who is able to fit multiple teachings together like pieces of a puzzle.

39. I understand that one must also consider objective evidence that the claimed subject matter would not have been obvious, if any such evidence is presented. I understand that the Patent Owner generally raises objective evidence of non-obviousness, and that this evidence may include: (a) commercial success of a product that is attributable to the claimed invention; (b) a long-felt, but unsatisfied need for the claimed invention; (c) the failure of others to successfully arrive at the claimed invention; (d) deliberate copying of the claimed invention; (e) unexpected results achieved by the claimed invention; and (f) praise of the claimed invention by others.

40. I understand that to be objective evidence of non-obviousness, the evidence must have a sufficient connection or "nexus" to the claimed invention, i.e. the evidence must be attributable to the claimed invention, not to some other cause or source. If the purported objective evidence of non-obviousness is attributable to some other cause or source, such as commercial success that is due

to the marketing of a product or features of the product that are not claimed, then there is no nexus to the claimed invention and the evidence does not demonstrate that the claim would have been not obvious.

G. Effective Filing Date

41. As discussed above, I understand that the effective filing date of a patent claim determines which references qualify as prior art and that the effective filing date is the time before which the obviousness of the claim is analyzed.

H. Written Description and Enablement Requirements

42. I understand that the specification of a patent supports a claim in the patent if the specification complies with the written description requirement and the enablement requirement. In particular, I understand that to satisfy the written description requirement and the enablement requirement, the Patent Act requires the patent specification to "contain a written description of the invention, and of the manner and process of making and using it, in such full, clear, concise, and exact terms as to enable any person skilled in the art to which it pertains, or with which it is most nearly connected, to make and use the same." I also understand that, to satisfy the written description requirement, the description in the patent specification must reasonably convey to a POSA that the inventors were in possession of the full scope of the claimed subject matter at the time the patent application with the specification was filed. I also understand that, to satisfy the

enablement requirement, the description in the patent specification must enable a POSA, after reading the description, to practice the full scope of the claimed subject matter without undue experimentation.

VI. BACKGROUND AND PRIOR ART

A. The Field of the ’781 Patent

43. The ’781 patent relates generally to components used by a dentist (or a specialist such as a prosthodontist) during a procedure to make and install a dental prosthesis onto implants in a patient’s jaw. Therefore, the field of the ’781 patent is the design of dental implants and prostheses.

44. Implant dentistry is a major field within general dental practice, and has been around for many decades. Generally speaking, implant dentistry focuses on replacing missing teeth with artificial teeth, by providing a stable platform to which a prosthesis (with the artificial teeth) can be securely anchored. The prosthesis is often secured to the implants, fixed in the jawbone, by connecting copings bonded in the prosthesis to abutments secured to the implants. The stability and longevity of the prosthesis depends in large part on the components used in the system, including the design of the implant.

45. After an implant has been embedded in the patient’s jawbone (and after sufficient time for the patient to heal), an implant abutment is typically screwed into the implant. The implant abutment is an intermediary part, to which

the prosthesis will be attached. Sometimes a prosthesis can be screwed directly into the implant. But sometimes the angle of the implant does not match the angle of the attachment points on the prosthesis. Thus, one of the purposes of an implant abutment is to account for differences in the angles involved.

46. In dentistry, a coping is a shell, typically made of metal or ceramic, that serves as the foundation for anchoring a dental restoration such as a prosthesis. Some copings are permanent, and others, such as impression copings, are disposable, and used only to facilitate the taking of an impression in order to make the prosthesis. Where implant abutments are used, copings typically connect directly to the exposed side of the abutment, often using a traditional screw. Sometimes copings that become a permanent part of the final prosthesis are referred to as "prosthetic copings."

47. For example, Bernhard (Pub. No. US 2017/0202649 A1) (Ex. 1003) describes and shows the arrangement of the basic components of a prosthetic dental implant system. Bernard (Ex. 1003), Fig. 1.

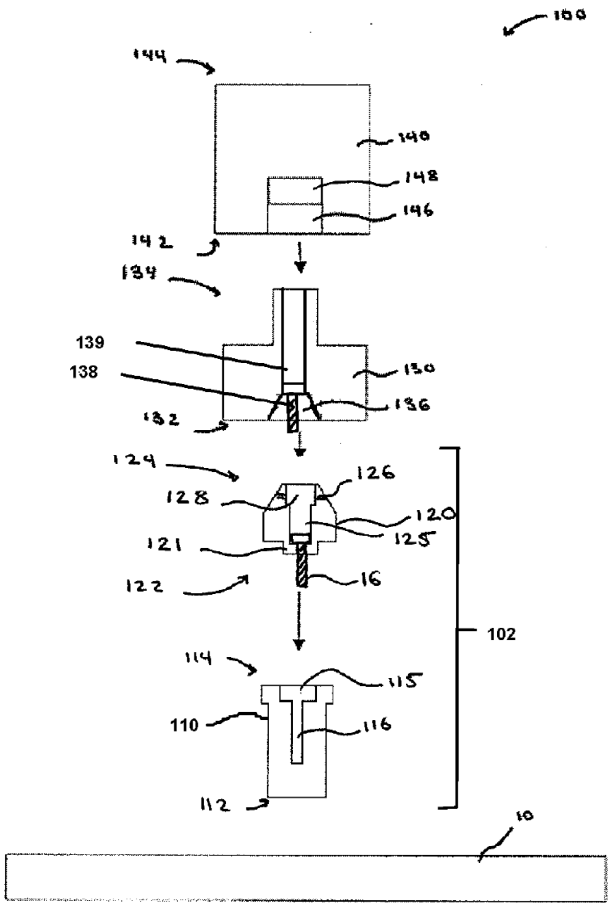

Figure 1

48. Starting at the top of Figure 1, the prosthesis 140 holds the artificial teeth, and could be a crown, a bridge, or a denture. Ex. 1003, [0006], Fig. 1. The prosthesis 140 will be bonded to the coping 130. Ex. 1003, [0009], Fig. 1. The coping 130 is attached to the abutment 120 using the screw 138. Ex. 1003, [0009], [0082], Fig 1. The abutment 120 can have a threaded distal portion designed to couple with the internal threading of the implant 110, or the abutment 120 can be secured to the implant 110 using the screw 16. Ex. 1003, [0065], [0142]. Finally, the implant 110 is affixed into the patient's jawbone 10. Ex. 1003, [0068].

49. All of the above components would have been well known and understood by a POSA in the field as of 2017, when Bernhard published.

B. Open-Tray and Closed-Tray Impression Techniques

50. After implants are fixed in the jaw, but before a prosthesis is permanently connected to the implant abutments, the copings must be properly seated and fitted into the prosthesis and aligned with the implant abutments. This typically involves taking an impression, which is a negative mold of the teeth, implants and surrounding tissue. The impression is used to prepare a permanent prosthesis. In some cases, the patient's removable denture will be converted into the fixed prosthesis, in which case the impression process is used to align the copings in the denture in the proper orientation to the existing implant abutments. In other cases, the impression will be taken in an impression tray and be used to create an entirely new prosthesis. The following discussion encompasses both cases, and I will use the term "impression" to mean both a denture that will be converted into a prosthesis and an impression tray that will be used to create a new prosthesis.

51. There are two well-known prior art impression-taking techniques: "open tray" and "closed tray." In both techniques, each coping is temporarily connected to its corresponding abutment so that the coping can be aligned with the

implant to which it will be connected. The two techniques mainly differ in how the impression is removed from the patient's mouth.

52. In an open-tray technique, there is a through-hole in the impression (i.e. the impression tray or the denture) to access each coping. After the dentist connects each coping to its abutment with a threaded screw, the copings are bonded to the impression (in the impression tray or in the holes in the denture), while having the patient bite down until the bonding material sets. The dentist then inserts a tool in each hole in the impression to unscrew each coping from its abutment. The dentist can then remove ("pick up") the impression from the jaw, with the bonded copings remaining in place in the impression in the correct position and orientation. The open-tray technique is more time intensive for the patient, because the dentist has to unscrew each coping from its abutment before removing the impression from the patient's open mouth, but the technique is accurate and produces good quality impressions because the copings are picked up in the correct and final position.

53. An open-tray technique using an impression tray is described and shown in Kumar (U.S. Patent No. 6,283,752) (Ex. 1004), which published in 2001. As shown in Figure 2A below, the screws 216 inserted through the openings 204 in the impression tray 202 connect the copings 210 to the implant abutments. Kumar (Ex. 1004), 8:30–42, Fig. 2A. As shown in Figure 2B below, after the impression

material 104 sets, the dentist loosens the screws 216 and removes the impression tray 202 with the copings 210. Ex. 1004, 8:43–48, Fig. 2B.

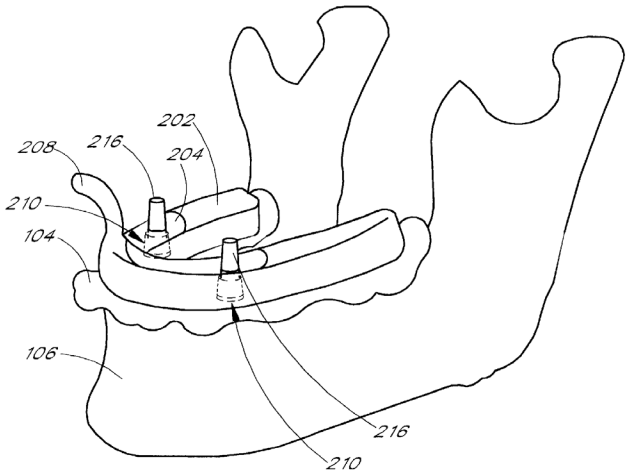

FIG. 2A
(PRIOR ART)

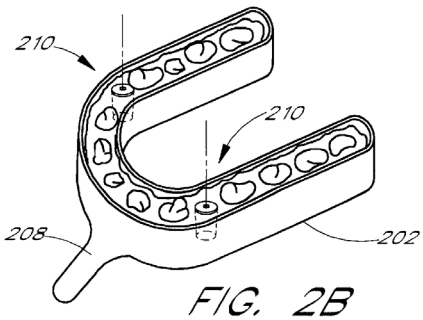

FIG. 2B
(PRIOR ART)

54. In a closed-tray technique, there are no through-holes in the impression (i.e. the impression tray or the denture), and the copings are not initially bonded to the impression. Instead, the impression material forms around each coping (in the impression tray or in recessed cavities in the denture at the coping locations), leaving an impression of where the coping should go. In the closed-tray technique, the dentist does not unscrew the copings from the abutments before removing the impression from the patient's mouth. Instead, when the impression is removed, the copings remain connected to the abutments. The dentist then unscrews the copings from the abutments and manually inserts them back into the impression at the locations where each coping left an impression. This technique is called a closed-tray technique because it does not require pre-drilled through-holes

for the temporary connection, but it does require the dentist to recreate the proper position and orientation of each coping after the fact. Although copings are often designed with a registration mark or index to help orient it during reinsertion into the impression, this technique can result in less accurate placement.

55. A closed-tray technique using an impression tray is also described and shown in Kumar. As shown in Figure 1A below, impression tray 102 (without through-holes) is placed on the jaw with the copings 110 connected to the abutments. Kumar (Ex. 1004), 8:6–16, Fig. 1A. As shown in Figure 1B below, after the impression material 104 sets, the dentist removes the impression tray 102 with the indentations 112 created by the copings 110. Ex. 1004, 8:17–23, Fig. 1B. The dentist removes the copings 110 from the abutments and inserts the copings 110 into the indentations 112 in the impression material 104. Ex. 1004, 8:23–29, Fig. 1B.

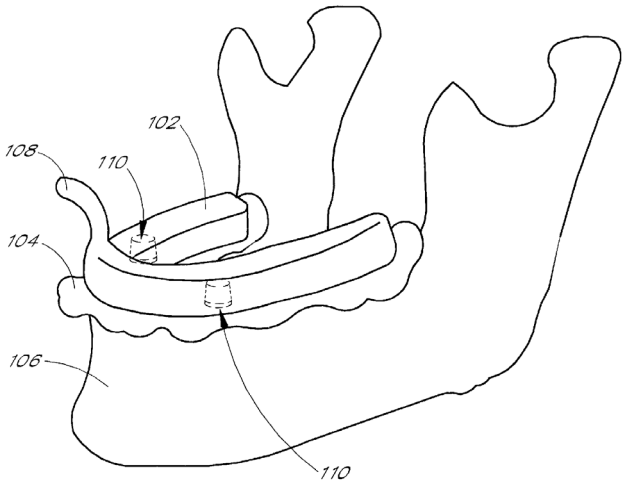

FIG. 1A
(PRIOR ART)

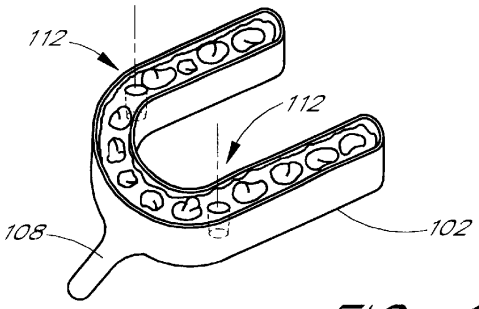

FIG. 1B
(PRIOR ART)

C. Bernhard

56. Bernhard (Ex. 1003) is a published U.S. patent application (Pub. No. US 2017/0202649 A1) entitled "Provisional Prosthetic Systems and Methods of Using Same." Bernhard published on July 20, 2017. I understand that Bernhard qualifies as prior art because it published before the earliest possible effective filing date of the '781 patent, which I understand is October 9, 2018.

57. Bernhard is within the field of the design of dental implants and prostheses. Bernhard discloses various designs for fasteners that temporarily connect a coping to an implant abutment during a pick up process for a prosthesis (including for example a denture to be converted into a fixed prosthesis). Bernhard's temporary fasteners will detach and separate the coping from the abutment when the dentist removes the prosthesis (e.g. the denture to be converted) from the jaw. As a result, the copings remain in place in the prosthesis without the

need to first unscrew the copings from the abutments using large through-holes in the prosthesis. Thus, Bernhard's temporary connectors combine the best aspects of the open-tray and closed-tray techniques discussed above.

58. For example, as shown in Figure 1 of Bernhard below, the abutment 120 includes a provisional connection feature 126, such as a slot, that engages a corresponding feature on the coping 130, such as a protrusion. Bernhard explains that "the provisional connection feature 126 … allow[s] for a 'snap-fit' and or a friction fit connection between the abutment 120 and … the coping 130 thereby advantageously allowing the abutment 120 and … coping 130 … to be easily removed via application of a separation force." Bernhard (Ex. 1003), [0075], Fig. 1.

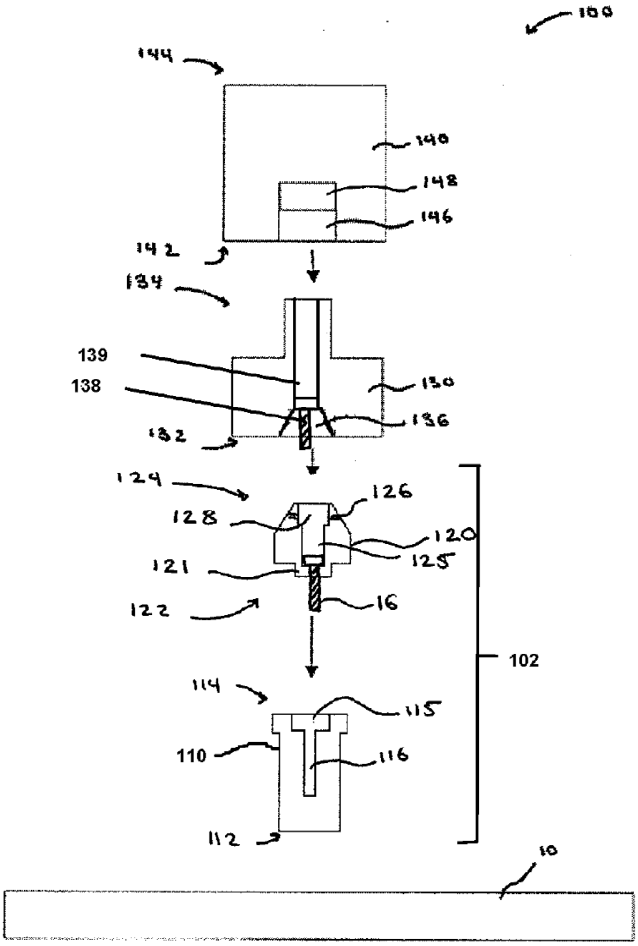

Figure 1

59. Bernhard discloses a variety of different "provisional connection features" that use one or more slots, grooves, recesses, holes, protrusions, ribs, dimples, bosses, pins, dowels, springs, clips, washers, fingers or a "bayonet mounting structure" that temporarily snap-fit or friction-fit together to connect the coping to the abutment. Ex. 1003, [0066], [0067], [0075], [0079]–[0081], [0109], [0124], [0126], [0127], [0130], [0135]–[0138], [0140]–[0144], [0146], Figs. 1, 8, 13, 15, 17, 19, 21.

60. Bernhard also discloses that "the provisional connection feature 126 can be located either entirely or partially along an interior surface of a bore, such as bore 125, of abutment 120." Ex. 1003, [0076], Fig. 1.

61. Bernhard also discloses the use of threaded screws to make a temporary connection, albeit in the context of connecting the coping 130 to the provisional prosthesis 140. Ex. 1003, [0085]. Specifically, Bernhard states that the "types of connection features" that can be used include "separable fasteners, such as threaded screws or bolts, resiliently deformable members for creating a 'snap fit' or friction fit between the two components, and threading, such as threading along the internal surfaces of the provisional prosthesis." Ex. 1003, [0085].

62. Figures 8–12 of Bernhard depict an embodiment of a prosthesis with a coping connected to an implant abutment—initially temporarily using a snap-fit connector during the pick-up process, and then permanently using a threaded screw.

63. As shown below in Figure 8, in the initial configuration, the coping 700 in the prosthesis 510 is temporarily connected to abutment 650 by the resilient spring element 708 that engages the annular slot 652 of the abutment 650, which Bernhard describes as a "snap-fit" connection. Ex. 1003, [0109], [0124], [0126], [0130], Fig. 8.

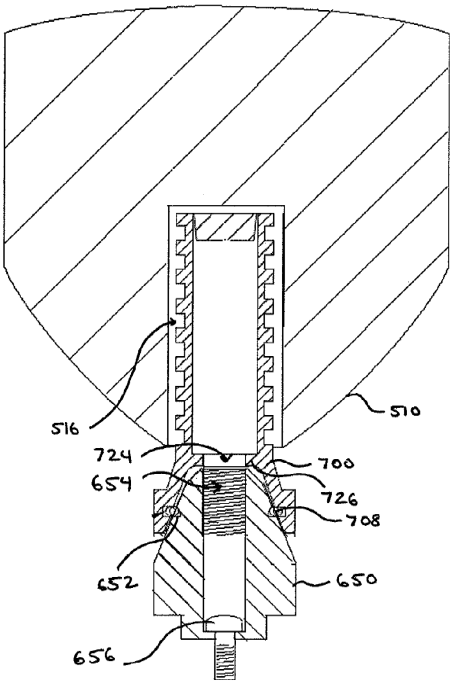

Figure 8

64. As shown in Figure 9 below, the prosthesis 510 is attached to the coping 700 using a bonding agent 518. Ex. 1003, [0131], Fig. 9. When the prosthesis 510 and the coping 700 are attached, it is time for the dentist to remove (or "pick-up") the prosthesis from the patient's mouth. To do so, the dentist pulls the prosthesis off the patient's jaw by applying a separation force that exceeds the retention force of the temporary snap-fit connection created by spring element 708 and slot 652. Ex. 1003, [0066].

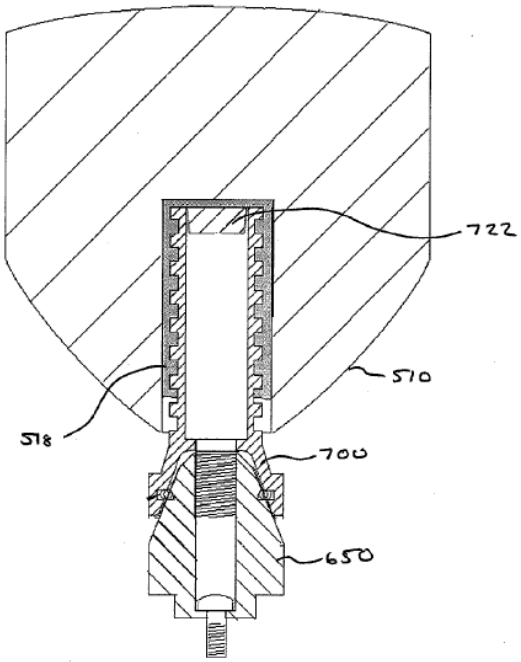

Figure 9

65. After the dentist removes the prosthesis 510 with the bonded coping 700 from the jaw, the bonded coping 700 remains in the prosthesis 510 because the pulling force causes the snap-fit connection to separate. Ex. 1003, [0066]. As shown in Figures 10 and 11 below, a drill bit 850 is used to drill a hole (bore 519) completely through the prosthesis 510 and the coping 700 so that a threaded screw can be inserted to permanently connect the prosthesis 510 and the coping 700 to the abutment 650. Ex. 1003, [0104], [0105], [0131], [0133], Figs. 3, 10, 11.

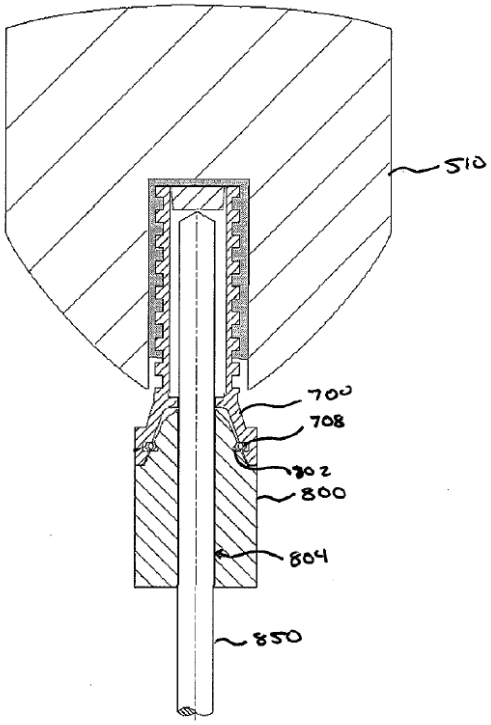

Figure 10

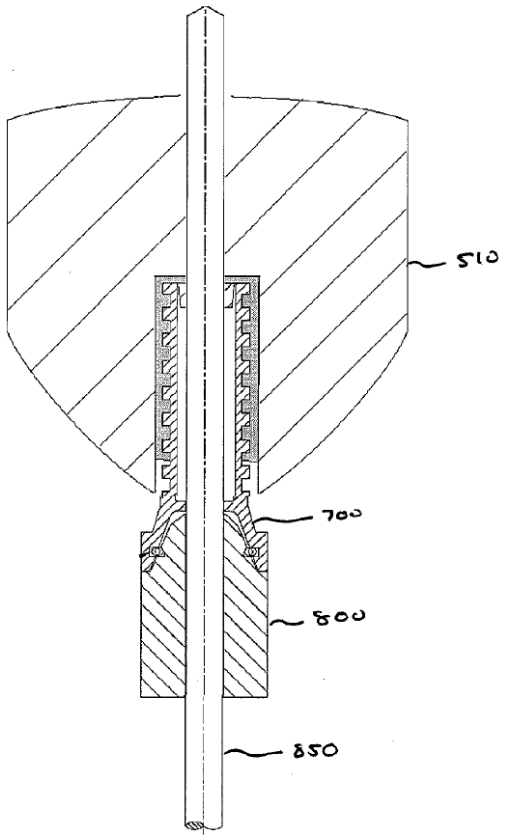

Figure 11

66. As shown in Figure 12 below, the prosthesis 510 with the bonded coping 700 are then permanently connected to the abutment 650 by the threaded fastener 750 with threads on threaded shaft 754. In particular, the threaded fastener 750 is inserted through the bore 519 in the prosthesis 510 and threaded into the threaded bore 654 of the abutment 650. Ex. 1003, [0105], [0134], Figs. 3, 8, 12.

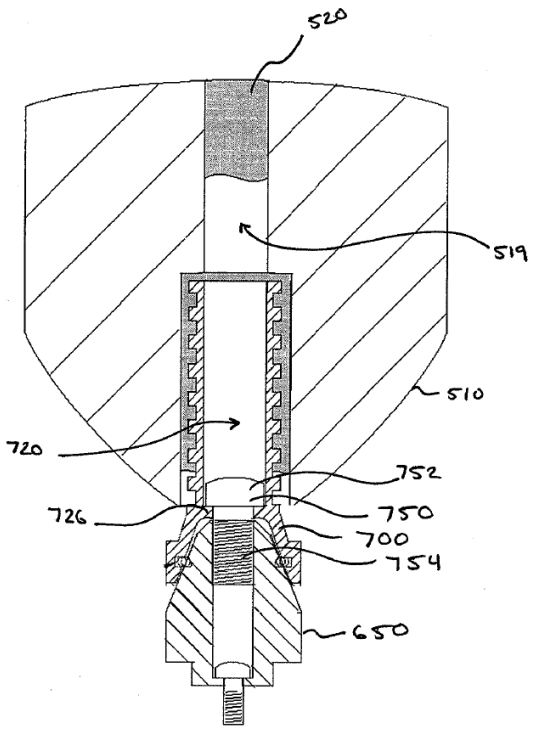

Figure 12

67. Referring back to Figure 1, Bernhard also explains that a threaded screw can be used to connect the coping to the abutment in order "to reduce the likelihood of inadvertent detachment" of the coping from the abutment. Ex. 1003, [0082], Fig. 1. Bernhard explains that "the coping 130 and the abutment 120 can be attached using a separate fastener such as prosthetic screw 138" and that "[t]he prosthetic screw 138 can pass through a bore 139 of the coping 130 and positively engage a connection feature of the abutment 120, such as threaded bore 128, or of the coupling screw 16 thereby securely attaching the coping 130 to the abutment 120." Ex. 1003, [0082].

68. In my opinion, Bernhard's hybrid pick-up process using temporary coping-abutment connectors combines the best aspects of the open-tray and closed-tray techniques. Bernhard teaches that one can detach the coping from the abutment without having to unscrew it (as in a closed-tray impression process) using a temporary connection feature, but without needing to predrill large through-holes (as in an open-tray impression process).

69. Finally, I note that the cover page of Bernhard lists "Nobel Biocare Services AG" as the applicant. Nobel Biocare is a major company in the industry, and its advancements in the field are well-known, and would have been noteworthy to a POSA.

D. Poovey

70. Poovey (Ex. 1005) is a published U.S. patent application (Pub. No. US 2016/0045290 A1) entitled "Dental Implant System Comprising Means for Preventing Rotation of the Superstructures and Methods of Forming and Installing." Poovey published on February 18, 2016. I understand that Poovey qualifies as prior art because it published before the earliest possible effective filing date of the '781 patent, which I understand is October 9, 2018.

71. Poovey is within the field of the design of dental implants and prostheses. Poovey discloses a threaded screw that temporarily connects a coping to an implant during a denture conversion or impression procedure. Poovey (Ex.

1005), [0021]–[0024], [0078]–[0084]. Poovey's "impression coping securing screw" has "flexible" threads made of a "pliable material" that permit the screw to be threaded into the implant to hold the coping in place but then "pulled out without much force" (and without having to be unscrewed) when the impression is removed. Ex. 1005, [0084]. Poovey adds that "[t]he threading and/or sleeve coating of the impression coping securing screw is preferably a plastic or silicone material with enough flexibility to be pulled out of the implant with low resistance such that it is not difficult for the dental professional and does not cause pain or stress to the patient." Ex. 1005, [0084]. Poovey explains that the flexible screw threads allow for an easier closed-tray technique with the accuracy of an open-trayed technique. Ex. 1005, [0084].

72. As shown in Figure 13 of Poovey below, the impression coping securing screw 1300 has threads 1310 that are "composed of a heat labile plastic, or silicone," or "made of metal or other suitable hard material, and coated with heat labile plastic, or silicone." Ex. 1005, [0079], [0084], Fig. 13.

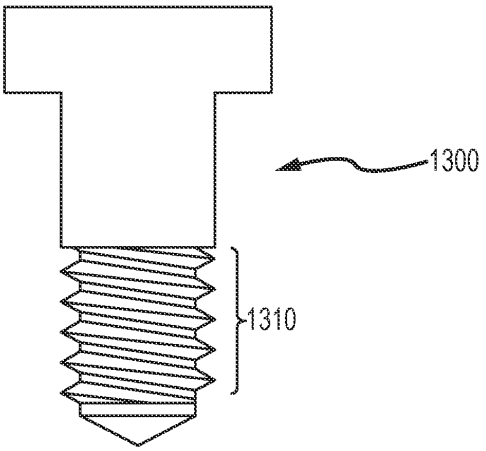

FIG.13

E. Gracco

73. Gracco (Ex. 1006) is an article published in Volume 142, Number 2 of the *American Journal of Orthodontics & Dentofacial Orthopedics* in August 2012, entitled "Effects of Thread Shape on the Pullout Strength of Miniscrews." I understand that Gracco was publicly available by July 30, 2012, according to a declaration by Lindsey Allen at Elsevier (Ex. 1007). I understand that Gracco qualifies as prior art because it published and was accessible to the public before the earliest possible effective filing date of the '781 patent, which I understand is October 9, 2018.

74. Gracco describes a study to determine the effects of variations in thread shape on the axial pullout strength of orthodontic miniscrews. Gracco (Ex. 1006) at 186. An orthodontic miniscrew (also commonly referred to as a miniscrew implant or just a mini-implant) is a temporary anchorage device popular

in orthodontic practice. For example, a miniscrew could be inserted through the gums into the jawbone to act as an anchor to help move poorly positioned teeth. Miniscrews share many characteristics with dental implants, and I consider miniscrew implants—which is the focus of Gracco—to be within the field of the design of dental implants. I authored a chapter in a textbook on mini dental implants, as listed in paragraph 16 of the Qualifications section above. Gracco is also reasonably pertinent to the problem addressed by the '781 patent because, as explained below, Gracco addresses the impact of different thread designs on the amount of force required to pull out a threaded screw without unscrewing it.

75. Gracco measured the force required to pull miniscrews with different thread designs out of a synthetic bone support, as shown in the diagram of the test setup in Figure 2 below. Ex. 1006, Fig. 2.

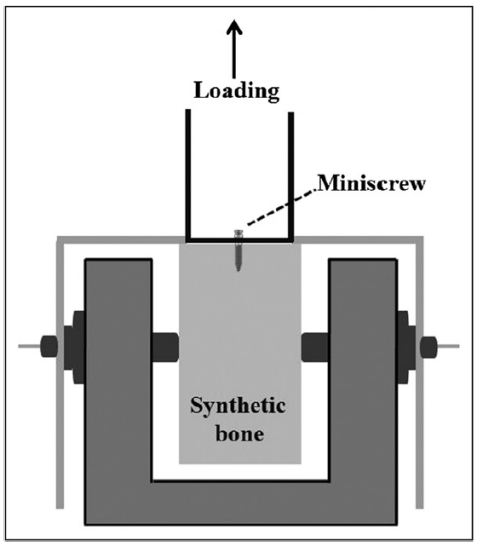

Fig 2. Configuration of testing setup.

76. The Gracco authors tested the five thread designs seen in Figure 1 below, including an asymmetric buttress thread (B in Figure 1), an asymmetric reverse buttress thread (A in Figure 1), and a symmetric trapezoidal thread (E in Figure 1). Ex. 1006 at 186–87, Fig. 1.

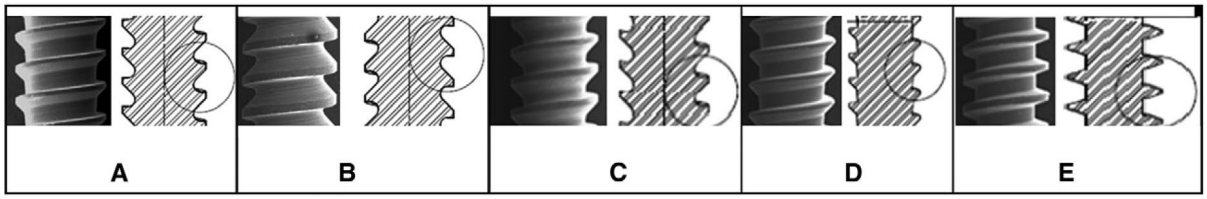

Fig 1. Schematic illustrations of miniscrew thread-designs: **A,** buttress reverse thread shape (control); **B,** buttress thread; **C,** 75° joint profile thread; **D,** rounded thread; **E,** trapezoidal thread.

77. Gracco states that the buttress thread (B in Figure 1) "with thread peaks inclined toward the miniscrew tip" exhibited a "significant reduction in pullout force" compared to the reverse buttress thread (A in Figure 1), and that "[t]his result could be explained by the geometry of the [buttress] thread that was inclined toward the tip, thus reducing the resistance to removal in an axial direction." Ex. 1006 at 187, 189, Fig. 1 (A, B). (Note that in Figure 1 of Gracco, the screw head is located above the image and the screw tip is located below the image, as shown for thread B in Figure 1 annotated below.)

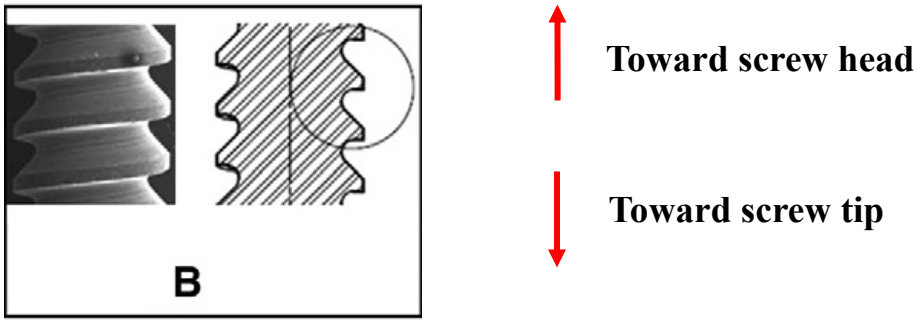

78. I will discuss various different types of threads in this declaration, including a buttress thread, as shown for example in thread B of Figure 1 of Gracco above. In doing so, I will use the term "thread angle" to refer to the angle at which the flank of the thread lies relative to the longitudinal axis of the screw.[2]

79. I will use the term "buttress thread" to refer to a well-known asymmetric thread, in which the thread flank on the distal side of the thread peak (facing the screw tip) lies at a larger (steeper) thread angle relative to the longitudinal axis of the screw, and the thread flank on the proximal side of the thread peak (facing the screw head) lies at a smaller (shallower) thread angle relative to the longitudinal axis of the screw. An example of a buttress thread is thread B of Figure 1 of Gracco shown above. Another example of a buttress thread

---

[2] I acknowledge that my use of the term "thread angle" in this declaration has a different meaning than how the term is sometimes used to refer to the angle between one distal thread flank and the next proximal thread flank with the vertex at the thread root. However, I have chosen my meaning of "thread angle" because of the importance of the angle of the thread flank relative to the longitudinal axis in the issues in this case, and because Patent Owner used this meaning during the prosecution of U.S. Patent No. 11,937,992, a parent of the '781 patent. Ex. 1015 at 297–298.

is shown below, in which the steep distal thread angle (green) is larger than the smaller proximal thread angle (red).

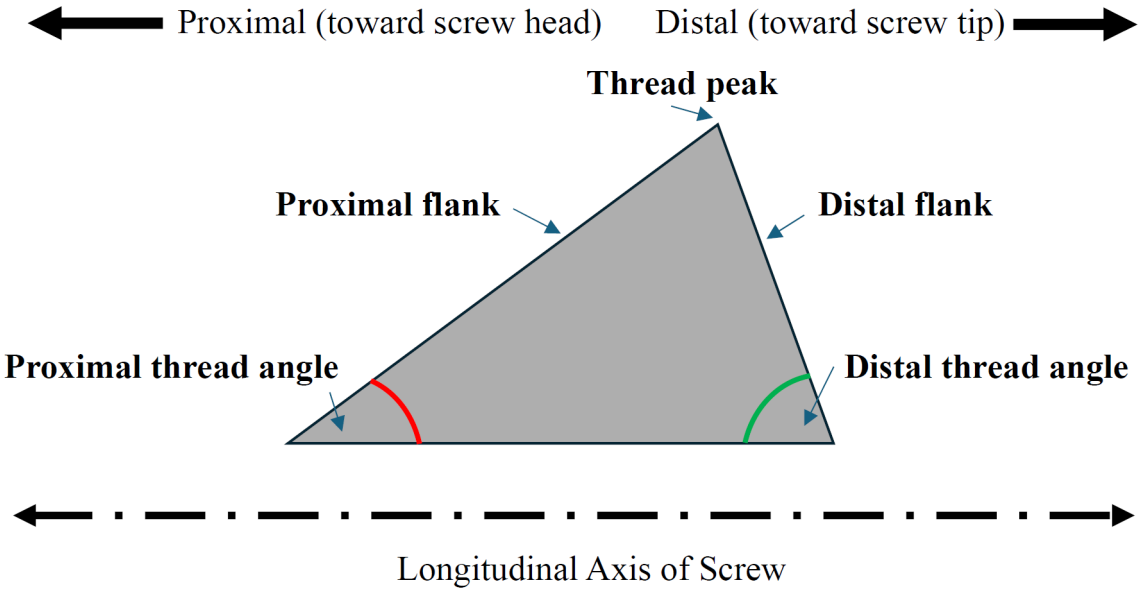

80. I will use the opposing term "reverse buttress thread" to refer to an asymmetric thread in which the proximal flank is at a larger (steeper) thread angle and the distal flank is at a smaller (shallower) thread angle, i.e. the opposite of a buttress thread, as shown for example in thread A in Figure 1 of Gracco.

F. Derey

81. Derey (Ex. 1008) is a published international patent application (WO 2013/030839 A1) entitled "A Method for Attaching and Detaching Dental Constructions and a Device Thereof." Derey published on March 7, 2013. I understand that Derey qualifies as prior art because it published before the earliest possible effective filing date of the '781 patent, which I understand is October 9, 2018.

82. Derey is within the field of the design of dental implants and prostheses. Derey describes the field of the patent application as dentistry generally, and more specifically, the field of dental restoration systems. Derey (Ex. 1008) at 1.[3] As explained below, Derey describes a device and method for attaching and detaching a denture to facilitate the taking of an impression. Ex. 1008 at 1–3.

83. Derey discloses a design for a temporary connector used when taking a dental impression. The connector, referred to as a "flexible holding device" in the disclosure, has a split-post structure with deflecting legs that are inserted into and grip the threaded bore of the implant to hold the impression in place, but that release their grip and detach when the impression is removed.

84. As shown in Figure 5 of Derey below, which shows a simplified representation, the flexible holding device 100 has a head 11, a body 12, and two extended legs 13. Ex. 1008 at 8, Fig. 5. The device is preferably made of polyacetal, a type of thermoplastic with mechanical properties similar to those of the flexible yet strong polymer with the tradename Delrin®. Ex. 1008 at 4.

[3] In this declaration, I cite to the page numbers at the top of each page in Derey.

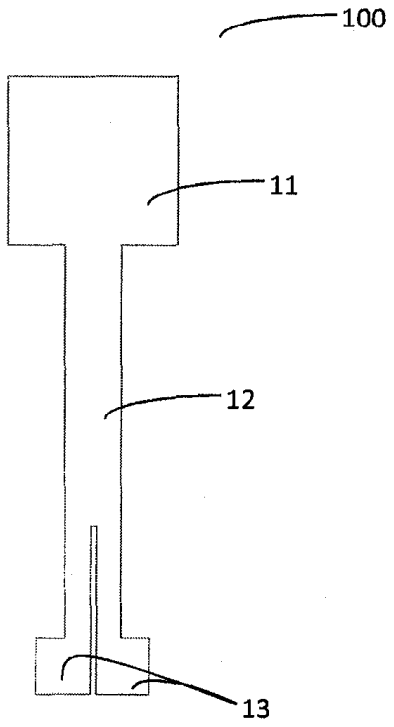

Fig. 5

85. As shown in Figure 6 below, the flexible holding device 100 is inserted legs first through the opening in the construction 51 into the implant 41. Ex. 1008 at 10, Fig. 6.

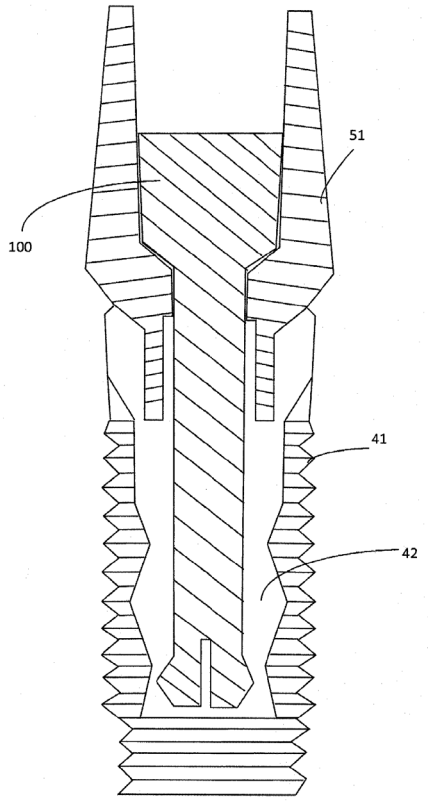

Fig. 6

86. Derey explains that the term "construction" means "any dental device which can be attached to the implant," including "an abutment." Ex. 1008 at 6. The text explains that "[t]he head of device 100 secures the construction 51, and the legs, of device 100, grip the internal thread 42 of implant 41 from within." Ex. 1008 at 10. More specifically, the legs "grip the internal thread of the implant from within, due to the legs 13 elastic repelling force which repels the legs form [sic – from] one another." Ex. 1008 at 9. Derey explains that, "[h]owever, if an upper pulling force is applied to the construction 51, the legs of device 100 will surrender their grip and the construction 51 can be easily detached from the implant 41," so that construction 51 "is removed with the impression." Ex. 1008 at 10.

VII. ’781 PATENT

A. Parent Provisional and Utility Applications

1. Overview

87. After the prior art references by Bernhard, Poovey, Gracco and Derey discussed above had published, Brandon Kofford and Charles Rudisill, the inventors named on the ’781 patent, filed their original provisional patent application on October 9, 2018: Provisional Application No. 62/742,942 (the “’942 Application”) (Ex. 1009).

88. I understand that Kofford and Rudisill subsequently filed two more provisional patent applications: (1) Provisional Application No. 62/774,402 (the “’402 Application”), filed on December 3, 2018 (Ex. 1010); and (2) Provisional Application No. 62/818,082 (the “’082 Application”), filed on March 13, 2019 (Ex. 1011).

89. I understand that Kofford and Rudisill subsequently filed four utility patent applications: (1) Application No. 16/596,361 (the “’361 Application”), filed on October 8, 2019 (Ex. 1012); (2) Application No. 17/691,108 (the “’108 Application”) (Ex. 1018), filed on March 9, 2022; (3) Application No. 18/328,730 (the “’730 Application”) (Ex. 1015), filed on June 3, 2023; Application No. 18/424,696 (“’696 Application”) (Ex. 1020), filed on January 26, 2024.

90. I will collectively refer to the three provisional applications (the ’942 Application, the ’402 Application and the ’082 Application) and the first three

utility applications (the ’361 Application, the ’108 Application and the ’730 Application) as the “Priority Applications.”

91. I understand that the first utility patent application (the ’361 Application) issued as U.S. Patent No. 11,311,354 (Ex. 1013), which published on April 26, 2022. I will refer to this published patent as “Kofford.”

92. I understand that the fourth utility application (the ’696 Application) issued as the ’781 patent (Ex. 1001) on December 3, 2024.

93. I understand that the ’696 Application that issued as the ’781 patent claims priority to the three earlier provisional patent applications and the three earlier utility patent applications set forth above, and therefore that the earliest possible effective filing date of claims 1–16 of the ’781 patent is October 9, 2018, the filing date of the first provisional application (the ’942 Application).

94. The ’361 Application that issued as the Kofford patent includes a discussion of the prior art, which acknowledges that prior art “snap-on” mounting systems permit use of “a closed impression tray pick-up technique” but criticizes these systems as complicated, expensive, causing patient discomfort, and reducing mechanical stability because they require larger holes. Kofford (Ex. 1013), 2:20–42. Kofford also criticizes prior art screw connectors, asserting that they require an open-tray technique with larger holes. Ex. 1013, 2:56–3:15. Kofford also criticizes, without mentioning Poovey, “[o]ther alignment systems … which use

silicone or melting screw threads to allow closed tray transfer" as potentially impractical and causing patient discomfort due to "the lack of disengagement independence required in melting all threads simultaneously." Ex. 1013, 4:10–19. Kofford also criticizes, without mentioning Bernhard, "[o]ther hybrid systems that use a snap-on engagement for the pick-up coping during transfer and subsequent screw-attachment" as potentially more complex and less precise than an open-tray technique. Ex. 1013, 4:19–25.

95. The '361 Application that issued as the Kofford patent is directed to various threaded fastener designs to temporarily connect a coping to an abutment during a procedure to take an impression or convert a denture into a permanent prosthesis. In some of Kofford's embodiments, the temporary fastener has a cap and a threaded post that are separable, so that when the dentist removes the prosthesis from the patient's jaw, the coping bonded in the prosthesis pulls and detaches the cap from the post, which remains threaded in the abutment. For example, as shown in Figure 5 of Kofford below, the temporary fastener includes cap 11 and threaded post 10, which is threaded into the threaded bore of the abutment 8 to temporarily connect the coping 9 to the abutment 8 before the impression is removed. Ex. 1013, 8:33–35, 14:17–39, Fig. 5. As shown in Figure 6 below, when the dentist removes the impression from the jaw, the pulling force causes the coping 9 and the cap 11 of the temporary fastener to detach from the

post 10, which remains threaded in the abutment 8. Ex. 1013, 8:36–37, 14:17–39, Fig. 6.

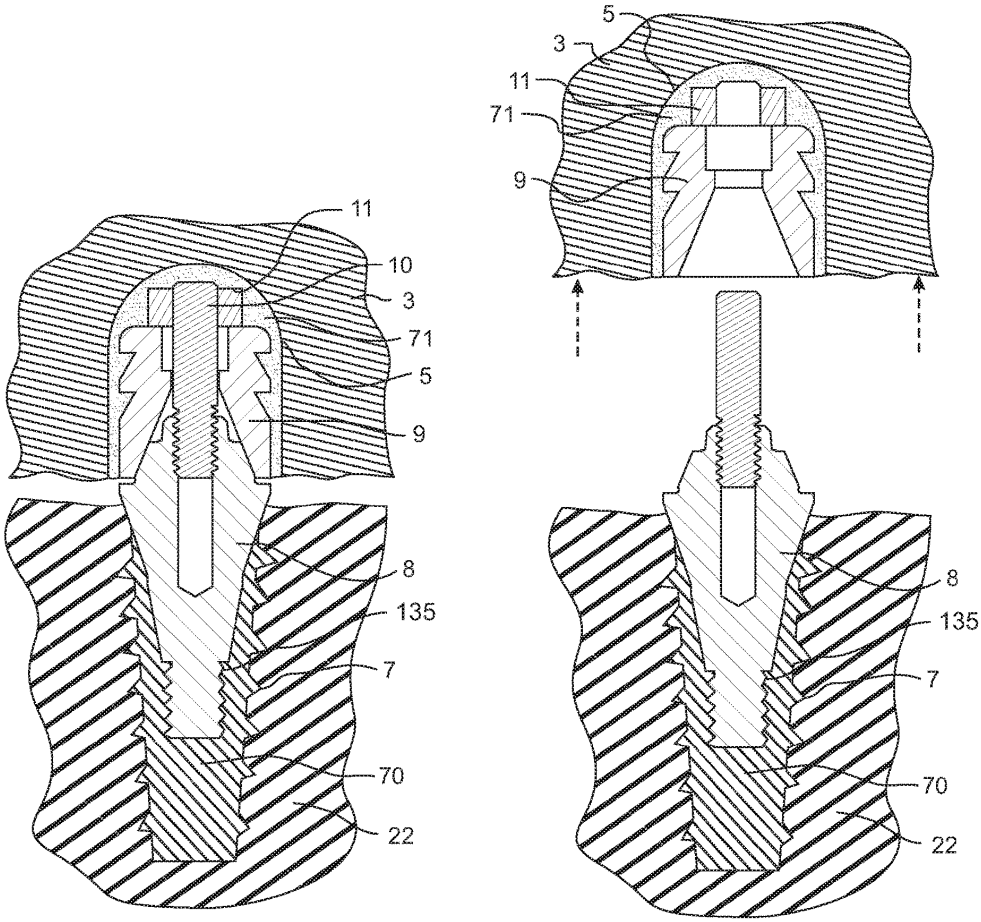

FIG. 5 FIG. 6

96. The ’361 Application that issued as the Kofford patent also describes a different temporary fastener embodiment in which the cap of the temporary fastener does not detach from the threaded post when the fastener is pulled out of the abutment. This different temporary fastener embodiment was first depicted in Figure 43 of Kofford and Rudisill’s original provisional application filed on October 8, 2019 (the ’942 Application), shown below. Ex. 1009.

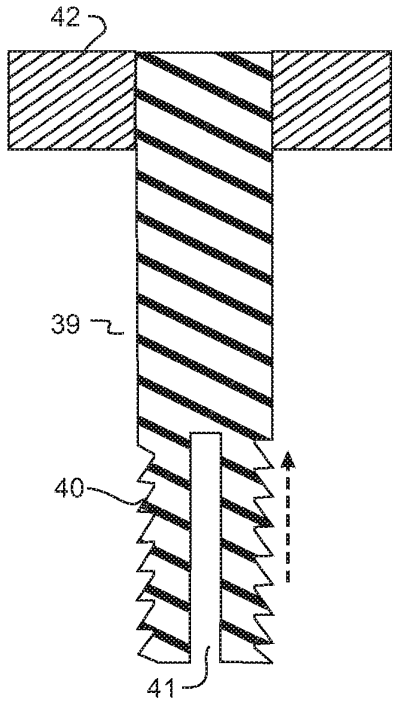

FIG. 43

97. The ’942 Application explains that in the temporary fastener embodiment shown in Figure 43, the post 39 with threads 40 does not separate from the flange 42, and the post 39 does not remain threaded in the abutment. Instead, when the dentist removes the prosthesis from the jaw, each coping pulls the entire temporary fastener (flange 42 and post 39) out of the abutment. ’942 Application (Ex. 1009) at 21, Fig. 43. The ’942 Application explains that post 39 has “a slot 41 and asymmetric threads or serrations 40 that allow the screw to be extracted in the axial direction.” Ex. 1009 at 21. The “asymmetric” thread pattern 40 depicted in Figure 43 (below left) is a buttress thread, like thread B in Figure 1 of Gracco (below right) discussed above. ’942 Application (Ex. 1009), Fig. 43; Gracco (Ex. 1006), Fig. 1 (B).

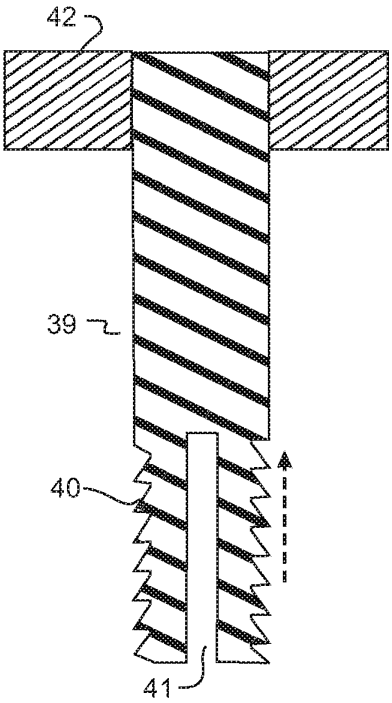

FIG. 43

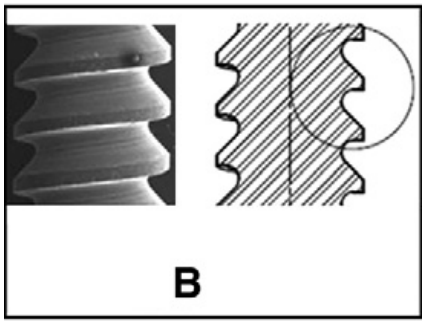

98. In Kofford and Rudisill's first utility application (the '361 Application), which issued as the Kofford patent, Figure 43 was renumbered Figure 75, as shown below.

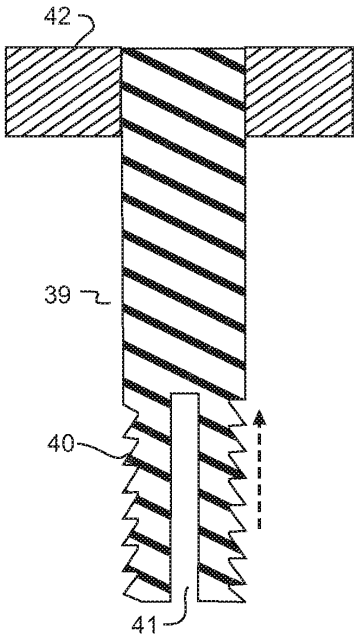

FIG. 75

Kofford (Ex. 1013), Fig. 75.

99. Kofford and Rudisill also added additional description of this embodiment in the specification of the ’361 Application that issued as the Kofford patent. This additional description further explained that the buttress thread and the deflecting structures of the split post created by the slot enable the temporary fastener to be pulled out of the abutment without being unscrewed. In particular, the specification of the Kofford patent states:

> [T]he threaded end of the post portion of the temporary fastener has a deflecting feature that allows the post to engage or disengage the abutment threads through axial motion instead of a rotary screw motion. … (Kofford (Ex. 1013), 5:24–28);
>
> FIG. 75 is a cross-sectional view of a temporary screw embodiment incorporating a split post that has deflecting sections with screw threads shaped to facilitate axial separation without unscrewing the post threads. … (Ex. 1013, 11:21–24);
>
> FIG. 75 shows a temporary attachment post 39 having a slot 41 and asymmetric threads or serrations 40 that allow the temporary attachment post to be inserted through rotation for alignment for coping pick-up but may be subsequently extracted with a separation force in the axial direction. … (Ex. 1013, 22:36–41);

> [T]he split post bottom structure shown in FIG. 75 which allows axial extraction … (Ex. 1013, 23:67–24:1).

100. As explained above, the ’696 Application that issued as the ’781 patent was preceded by three provisional applications and three utility applications.

2. Provisional Applications

101. Kofford and Rudisill’s first provisional application filed on October 9, 2018 (the ’942 Application) (Ex. 1009) included Figure 43 and the following description of that temporary fastener embodiment:

> The invention is not restricted to a fastener with standard screw threads that engage the abutment. For example, other separable fasteners are possible by providing features that allow the fastener to be removed by other means that [sic – than] a separable cap. For example, as shown in Fig. 43 a fastener 39 may contain a separable threaded or serrated portion 30 that engages the screw in the abutment, but will release with axial force. Fig. 43 shows a screw 39 having a slot 41 and asymmetric threads or serrations 40 that allow the screw to be extracted in the axial direction.

’942 Application (Ex. 1009) at 21, Fig. 43.

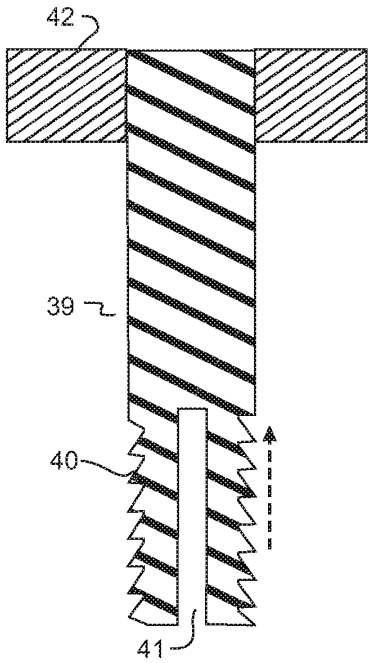

FIG. 43

102. Kofford and Rudisill's second provisional application filed on December 3, 2018 (the '402 Application) (Ex. 1010) also included Figure 43 and the following description of that temporary fastener embodiment, which had been expanded from the description in the earlier '942 Application:

> The invention is not restricted to a temporary attachment post with standard screw threads that engage the abutment through rotation. For example, alternate separable temporary attachment posts [sic – post] embodiments are possible providing features that allow the post to removably hold the coping to the abutment by other means than a separable cap. For example, as shown in FIG. 43 a fastener 39 may contain a separable threaded or serrated portion 30 that engages the screw threads in the abutment for cementing, but that will release with axial force after. FIG. 43 shows a temporary attachment post 39 having a slot 41 and asymmetric threads or serrations 40 that allow the

temporary attachment post to be inserted through rotation for alignment for coping pick-up but may be subsequently extracted with a separation force in the axial direction. ('402 Application (Ex. 1010) at 16);

For example, the split post bottom structure shown in FIG. 43 which allows axial extraction can also be used for axial insertion. (Ex. 1010 at 20).

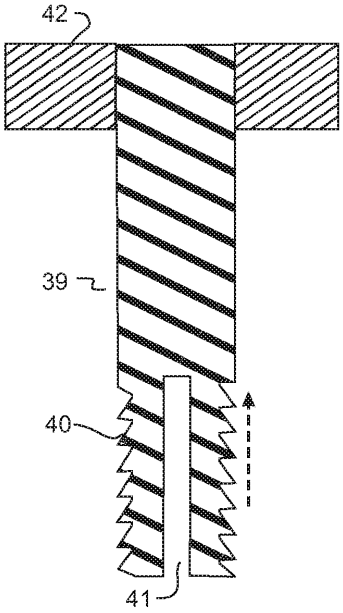

FIG. 43

103. Kofford and Rudisill's third provisional application filed on March 13, 2019 (the '082 Application) (Ex. 1011) did not include Figure 43 or any related description. The '082 Application is directed to a scan-flag system used to recreate the relative positions of dental implants in 3D-software, in order to digitally design a prosthesis. Ex. 1011 at 6–7.

3. Utility Applications

104. Kofford and Rudisill's first utility application filed on October 8, 2019 (the '361 Application) (Ex. 1012), which issued as the Kofford patent, renumbered Figure 43 to become Figure 75 and included the following description of that temporary fastener embodiment, which had been expanded from the description in the earlier '402 Application:

> In some embodiments, the threaded end of the post portion of the temporary fastener has a deflecting feature that allows the post to engage or disengage the abutment threads through axial motion instead of a rotary screw motion. ('361 Application (Ex. 1012) at 67);
>
> FIG. 75 is a cross-sectional view of a temporary screw embodiment incorporating a split post that has deflecting sections with screw threads shaped to facilitate axial separation without unscrewing the post threads. … (Ex. 1012 at 78);
>
> The inventive concepts disclosed are not meant to be restricted to a temporary attachment post with standard screw threads that both engage and disengage the threads in the implant abutment through rotations. For example, alternate separable temporary attachment posts [sic – post] embodiments are possible providing features that allow the post to removably hold the coping to the abutment by other means than a separable cap. For example, as shown in FIG. 75 an alignment fastener 39 may contain a separable threaded or serrated portion 40 that engages the screw threads in the abutment for pick-up,

but that will release with axial force after. FIG. 75 shows a temporary attachment post 39 having a slot 41 and asymmetric threads or serrations 40 that allow the temporary attachment post to be inserted through rotation for alignment for coping pick-up but may be subsequently extracted with a separation force in the axial direction. Although the threads could be designed to provide engagement with the implant abutment threads through axial motion in the opposite direction to the arrow shown in FIG. 75, rotation to a design torque on engagement is generally preferred. If the post 39 is designed to be pulled out of the abutment during the coping pick-up process, it will subsequently need to be removed from flange 42 and the prosthesis assembly. Since there is no processing impact on patient comfort, higher mechanical forces or a broader range of energy or chemical processing may be employed to remove the post from the prosthesis after coping pick-up. (Ex. 1012 at 97–98);

For example, the split post bottom structure shown in FIG. 75 which allows axial extraction … (Ex. 1012 at 100).

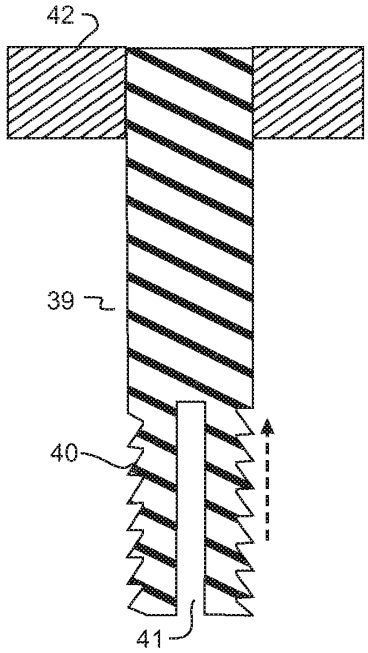

FIG. 75

105. Kofford and Rudisill's second utility application filed on March 9, 2022 (the '108 Application) included the same Figure 75 and related description of that temporary fastener embodiment as the '361 Application set forth above. '108 Application (Ex. 1018) at 50, 61, 80–81, 83.

B. Prosecution History of the Parent '992 Patent

106. The '781 patent issued from the '696 Application, filed on January 26, 2024. I understand that the '696 Application is a continuation application of the '108 Application, the '361 Application and the '730 Application. The '730 Application issued as the parent '992 patent on March 26, 2024.

107. I have reviewed the prosecution history for the '730 Application that issued as the parent ' 992 patent. Ex. 1015. The prosecution history includes the

’730 Application as filed on June 3, 2023, including the specification (Ex. 1015 at 19–65), Figures 1–94 (Ex. 1015 at 73–98) and claims 1–30 (Ex. 1015 at 66–72).

108. On August 7, 2023, the examiner issued a restriction requirement that required Patent Owner to elect to prosecute claims directed to a single disclosed species, one of which was Species Q (Figure 75). Ex. 1015 at 174–79.

109. On August 8, 2023, Patent Owner filed a response that elected “to prosecute in this application the Species Q (Fig. 75)” and stated that “[c]laims 1, 3-22, and 24-30 read on the elected species Q.” Ex. 1015 at 181.

110. On September 7, 2023, the examiner issued an office action setting forth a number of claim rejections and objections to the claims and specification. Ex. 1015 at 199–237.

111. On December 5, 2023, Patent Owner filed a response that made a number of amendments to the specification and the pending claims. Ex. 1015 at 283–301.

112. Patent Owner amended the paragraph of the specification that describes the temporary screw of Figure 75 as follows:

> FIG. 75 shows a temporary **fastener 190 with a head 42 portion and an** attachment **post portion** 39. **The attachment post portion 39 is shown as** having a slot 41 and asymmetric threads or serrations 40 **that have proximal flank 183 and a distal flank 184. This asymmetric threading** ~~that allow~~ **still allows** the temporary

attachment post **portion 39** to be inserted through rotation **like other temporary screw embodiments** for alignment for coping pick-up**.** **The post 39** ~~**but**~~ may be subsequently extracted with a separation force in the axial direction.

Ex. 1015 at 287. Patent Owner also submitted a new version of Figure 75 that added new reference numerals 183, 184, 190 and 210:

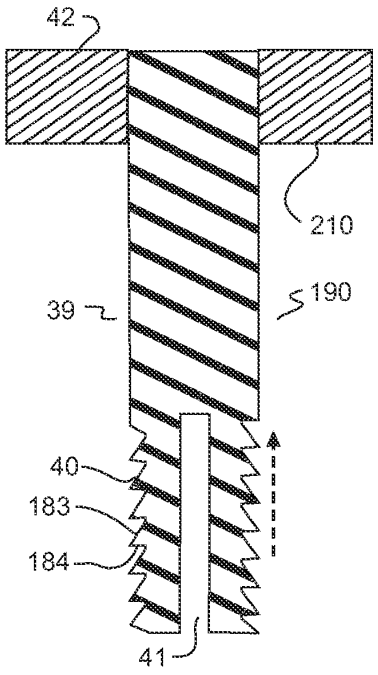

FIG. 75

Ex. 1015 at 282, 293.

113. In the accompanying remarks, Patent Owner made the following statements about the differences between the asymmetric threads of the temporary fastener of Figure 75 and the symmetric threads of the definitive screw and the abutment of Figure 9:

Figures 9 and 75 are reproduced below with enlargements of the cross-sectional views of a few threads of the definitive screw engaging the implant abutment of FIG.9 and the temporary screw of FIG. 75.

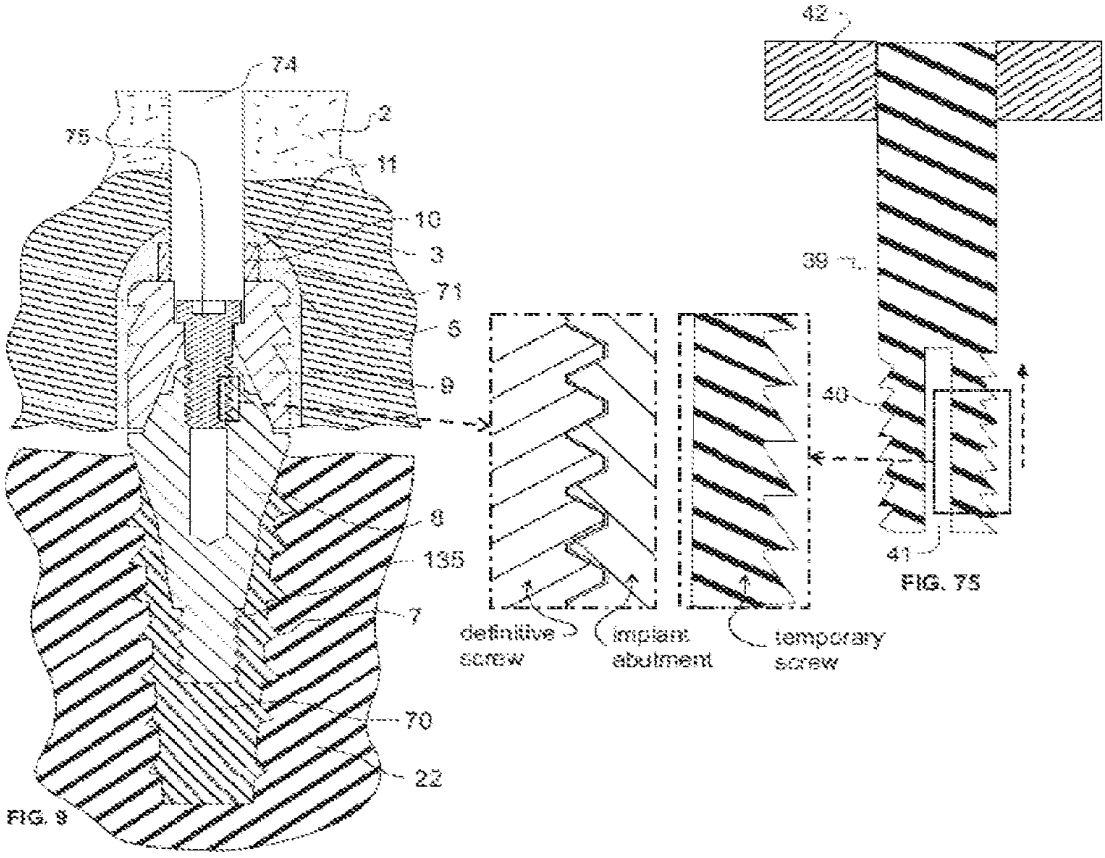

As shown in FIG. 9, the male definitive screw threads (callout 150 for these threads added to the replacement figure) essentially fill the female abutment threads (callout 18 for the female abutment threads added to FIG. 9 as well). When engaged, the profile of the temporary screw threading 40 fits within the profile of the abutment threading 18 to preserve the female threading geometry for the definitive screw after pick-up processing. The temporary fastener 190 of FIG. 75 engages the implant abutment 8. The male threading 40 of the temporary fastener 190 can engage the female abutment threads 18

without or with distortion. The temporary fastener 190 of FIG. 75 can be combined with various coping and implant abutments, such as the environment of the implant abutment 8 and coping 9 elements of FIG. 4 and FIG. 9.

Typically, the standard definitive screw has a continuous symmetrical helical form as is well known to those of skill in the art. FIG. 9 (enlarged portion of the screw threading shown in the box adjacent FIG. 9) also shows that the implant abutment threading 18 matches and is filled with the definitive screw post threading 150. That is, the female implant abutment threading substantially matches, e.g., has substantially the same pitch as the definitive screw male threading 150. Thus, as shown in FIG. 9, the male definitive screw threads 150 matably, threadably engage, e.g., essentially fill the female abutment threads 18.

In contrast, the thread profile 40 of the temporary screw of FIG. 75 is not the same as the illustrated profile (enlarged from FIG. 9 shown above) of the definitive screw threading. As shown in FIG. 75, the proximal side or flank of at least some of the respective threads of the temporary screw/fastener (toward the head portion 42), labeled as feature 183 in the replacement drawing, lies at an angle that is at a smaller angle relative to the longitudinal axis than the angle of the proximal side of the threads of the definitive screw. The distal side of the temporary fastener thread illustrated in FIG. 75 (labeled as feature 184 in the replacement drawing) lies at a steeper angle relative to the longitudinal axis than the distal side of the threads of the definitive screw. Although the threading shape is different, when engaged, the

profile of the temporary screw threading 40 fits within the same abutment threading 18 as the definitive screw.

For background information, it may be useful to look at how changing the proximal side thread angle of a male thread affects its fit into a fixed female thread shape. The following figure shows a sequence of a single male asymmetric thread in which the proximal side angle becomes progressively closer to the axis engaging a fixed symmetric female thread.

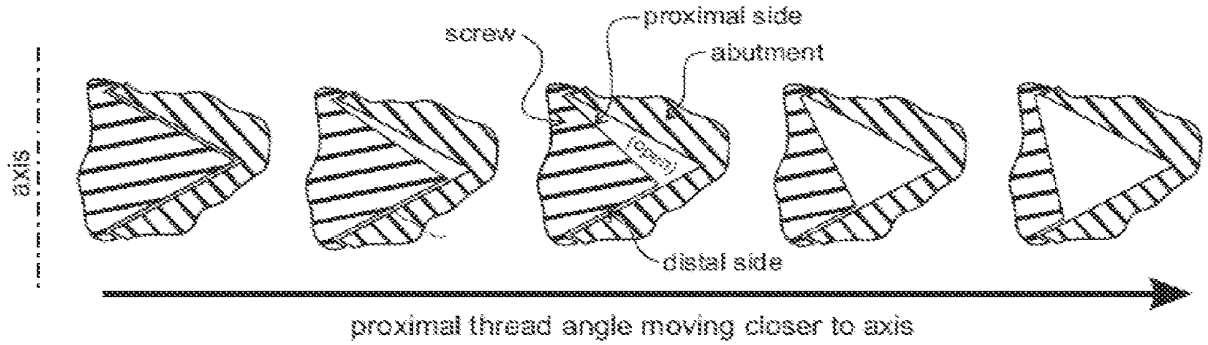

In this schematic sequence, the male thread of the fastener is to the left and the implant abutment thread is to the right. It is evident that as the male proximal side profile angle becomes closer to the axis, the male thread fills less of the female thread. An increasingly larger open space is created as the outer vertex of the male thread moves towards the axis with the increasingly smaller proximal angle. In the limit when the proximal angle nears the axis, there is a negligible filling of the female threads. That is, the remaining male thread essentially has no real engagement with the female thread. This follows directly from simple geometry and is a feature of FIG.

75, for example, having at least an inherent property of the asymmetric/serrated threads with the different thread angle. …

The open space created on the proximal side of the male thread of temporary fastener 190 relative to the female thread(s) due to the angle lying closer to the axis represents a portion of the female abutment thread that is filled with the definitive screw when engaged as shown in FIG. 9. As a result of the open space from the different thread profile of the temporary screw compared to the definitive screw in FIG. 9, the temporary screw threading of FIG. 75 has less surface area contact with the female implant abutment threading, has less material volume within the engagement depth with the implant abutment and can have a smaller radial extent or width than the definitive screw.

Similarly, a steeper angle on the distal side thread profile of the temporary fastener may create additional open space to reduce relative implant abutment thread surface contact and volume. Thus, slot 41 and/or the thread profile of FIG. 75 can reduce relative implant abutment thread surface contact area and engaged volume. …

Applicant respectfully submits that FIG. 75 clearly shows a temporary thread pitch angle that is different from a pitch angle of threads of the implant abutment and definitive screw in FIG. 9.

… Applicant respectfully submits that FIG. 75 shows the temporary fastener with the flank angle of the thread(s) and FIG. 9 shows the definitive screw with its proximal flank angle. Comparing

> the respective flank angles, Referring to FIG. 75 showing the proximal flank angle(s) clearly being smaller.

Ex. 1015 at 295–99.

114. On January 17, 2024, the examiner issued a notice of allowance that allowed the pending claims 18–29. Ex. 1015 at 1030–41.

115. On March 26, 2024, the ’992 patent issued with claims 1–12, which although renumbered correspond consecutively to allowed claims 18–29. Ex. 1015 at 1045.

C. Prosecution History of the ’781 Patent

116. I have reviewed the prosecution history for the ’696 Application that issued as the ’781 patent. Ex. 1020. The prosecution history includes the ’696 Application as filed on January 26, 2024, including the specification (Ex. 1020 at 51–98), Figures 1–94 (Ex. 1020 at 8–33) and claims 1–17 (Ex. 1020 at 99–102).

117. On June 14, 2024, the examiner issued a restriction requirement that required Patent Owner to elect to prosecute claims directed to a single disclosed species, one of which was Species Q (Figure 75). Ex. 1020 at 924–929. The examiner stated that during a telephone conversation on June 5, 2024, Patent Owner’s attorney provisionally elected “to prosecute the invention of Species Q, Fig. 75.” *Id.* at 927.

118. On July 1, 2024, Patent Owner filed a response that confirmed the election of Species Q, Figure 75, and stated that "[c]laims 18, 20-21, 23-28, 30-35, 38-39 and 47 are covered by or not excluded by the election." Ex. 1020 at 1007.

119. On October 22, 2024, the examiner issued a Notice of Allowance that allowed the pending claims 18, 20–21, 23–26, 28, 30–35 and 37–38. Ex. 1020 at 1114–1122.

120. On December 3, 2024, the '781 patent issued with claims 1–16, which although renumbered correspond consecutively to allowed claims 18, 20–21, 23–26, 28, 30–35 and 37–38. Ex. 1020 at 1129.

D. '781 Patent Specification

121. The specification of the '781 patent includes Figure 75, albeit with new, additional reference numerals 183, 184, 190 and 210 that Patent Owner added during the prosecution of the parent '992 patent. Ex. 1015 at 282, 293; Ex. 1001, Fig. 75. The specification of the '781 patent also includes the associated description of the embodiment of Figure 75, with the amendments that Patent Owner made during prosecution of the parent '992 patent that are quoted above. Ex. 1015 at 286–87; Ex. 1001, Fig. 75, 5:31–35, 11:31–34, 23:10–41, 24:58–59, Fig. 75.

E. ’781 Patent Claims

122. The ’781 patent has 16 claims, including independent claims 1, 6, 8 and 10 and dependent claims 2–5, 7, 9 and 11–16. Ex. 1001, 25:45–29:2. Claims 1–9 and 15–16 recite a “dental system” with at least four components: a threaded implant abutment, a coping with an aperture, a definitive screw, and a temporary fastener; claims 10–14 recite a coping, abutment and temporary fastener but do not recite a definitive screw. The claimed “temporary fastener” has a different thread pattern than the definitive screw and the implant abutment, and is threaded into the abutment but pulled out without being unscrewed. I attach a list of the claims, separated into distinct elements, as Appendix A.

123. As explained further below, claims 1–16 are much broader than Figure 75 and the associated description, in several respects.

124. For example, the independent claims 1, 6, 8 and 10 are not limited to temporary fasteners with buttress threads as described in the specification and depicted in Figure 75. Instead, these claims encompass temporary fasteners with any thread pattern that is different than the definitive screw and implant abutment threads. Claim 1 requires the “temporary fastener” to have a “threading contact area” with the implant abutment that is “less than” the “threading contact aera” of the definitive screw” with the abutment. Ex. 1001, 26:14–24. Claim 8 requires the definitive screw to have a “volume” of “post material” that is “greater than” a

"volume" of "shaft material" of the temporary fastener. Ex. 1001, 27:51–60. Claim 10 requires the temporary fastener to have a "shaft threading contour" that "does not essentially match" the "implant abutment threads contour." Ex. 1001, 28:16–20. Finally, claim 6 does not impose any requirement that the thread pattern of the temporary fastener be different or not different than the definitive screw and implant abutment thread pattern, and therefore encompasses all different thread patterns. Ex. 1001, 26:50–27:10.

125. Moreover, independent claims 1, 6, 8 and 10 are not limited to a temporary fastener that has a slot that creates a split-post structure with deflecting legs as described in the specification and depicted in Figure 75. Instead, these claims merely require that the temporary fastener must release from the abutment when an axial force is applied and, for claims 1, 6 and 8 but not claim 10, that the temporary fastener threads do not continuously engage the abutment threads. Claim 1 recites that the temporary fastener "is configured to release at least a portion of the temporary fastener and the coping from the implant abutment as a unit when an axial release force is applied in a proximal direction" and that the "distal shaft portion" of the temporary fastener "does not engage the implant abutment threads continuously." Ex. 1001, 26:4–13. Claims 6 and 8 have similar limitations. Ex. 1001, 26:66–27:10, 27:41–50. Claim 10 does not require non-continuous temporary fastener threads like claims 1, 6 and 8, but claim 10 does

recite that the temporary fastener "is configured so that in response to application of an axial release force above a predetermined value in a proximal direction, the coping and the temporary fastener are released as a unit from the implant abutment." Ex. 1001, 28:32–36. None of the independent claim requires the temporary fastener to have a split-post structure with deflecting legs to enable the temporary fastener to be pulled out without having to be unscrewed.

VIII. LEVEL OF ORDINARY SKILL

126. I have been asked to consider and provide my opinion regarding the qualifications and experience of a person of ordinary skill in the art (POSA) before the effective filing date. As explained above, I understand that the earliest possible effective filing date is October 9, 2018.

127. In my opinion, before the effective filing date, a POSA would have at least a bachelor's degree in mechanical engineering, biomedical engineering, materials science engineering, or an equivalent degree, plus at least five years of experience working with (i.e. researching, developing and/or designing) dental implants and prostheses. A POSA would also have some familiarity and experience with fasteners (threaded and otherwise) used to connect prostheses, implants and related components. A POSA could also be a person with less formal education but commensurately more practical experience, or vice versa.

128. A POSA would have been familiar with several concepts relevant to dental implants, including:

- The process of taking an impression as a step in the process of making and installing a prosthetic;
- The process of converting a removable denture to a permanent prosthetic;
- Related dental components and tools, including implants, copings, abutments, fasteners (threaded or otherwise) and torque drivers; and
- The various types, attributes and functions of different threaded fasteners and screws.

129. A POSA would also have had access, if necessary, to a multidisciplinary team consisting of dental practitioners and biomedical engineers. To the extent a POSA would have had insufficient knowledge, expertise or experience in any of the areas above, a member of their team could have filled in the missing expertise. I understand that one of the inventors, Brandon Kofford, is a practicing prosthodontist, while the other inventor, Charles Rudisill, has a background in materials science engineering.

IX. CLAIM INTERPRETATION

130. In conducting my analysis, I have interpreted the language of claims 1–16 of the ’781 patent to have its ordinary meaning as it would be understood by a POSA after reading the ’781 patent. I do not believe that any language in the claims needs to be further defined in order to conduct my analysis.

X. GROUNDS OF UNPATENTABILITY

131. As explained in detail below, it is my opinion that:

(a) Claims 6 and 10–16 are indefinite (Ground 1);

(b) Claims 1–16 do not comply with the written description requirement and the enablement requirement (Ground 2);

(c) Claims 10, 12, 15 and 16 would have been obvious based on Bernhard in view of Poovey and Gracco (Ground 3); and

(d) Claims 1–9, 11, 13 and 14 would have been obvious based on Bernhard in view of Poovey, Gracco and Derey (Ground 4).

A. Ground 1: Claims 6 and 10–16 Are Indefinite

1. Claim 6 Is Indefinite Because It Recites Only Functional Limitations at the Alleged Point of Novelty

132. As explained below, claim 6 is indefinite because it recites only functional limitations at the alleged point of novelty.

133. As explained above, the ’781 patent specification explains that the temporary fastener of Figure 75 can be pulled out of the abutment without being unscrewed because of asymmetric buttress threads 40 and the deflecting legs created by slot 41. Ex. 1001, 5:31–35, 11:31–34, 23:17–30, 24:58–59, Fig. 75.

134. However, claim 6 does not include any structural limitations for the temporary fastener that relate to its ability to be pulled out of the abutment without being unscrewed. In particular, claim 6 does not require the temporary fastener

threads to be asymmetric (and therefore different than the symmetric definitive screw and implant abutment threads). Claim 6 also does not require the temporary fastener to have a slot that creates a split-post structure with deflecting legs.

135. Instead, claim 6 recites only a functional limitation for the allegedly novel feature of enabling the temporary fastener to be pulled out without being unscrewed. In particular, claim 6 recites the following functional limitation that the temporary fastener is "configured to" be pulled out of the abutment without being unscrewed:

> wherein the temporary fastener is configured to release at least a portion of the temporary fastener and the coping from the implant abutment as a unit in response to an axial release force that is applied only in a proximal direction to the temporary fastener whereby the axial release force is applied without rotation of the temporary fastener …

Ex. 1001, 26:66–27:5.

136. Claim 6 does not include any limitations that describe how the temporary fastener achieves this function. In particular, the claim does not include any limitations that describe which structural features of the temporary fastener enable it to be pulled out without being unscrewed. Therefore, the functional limitation quoted above purports to encompass any and all threaded temporary fasteners that can perform this function, regardless of their structure.

137. As a result, the scope of claim 6 is indefinite.

2. The "Does Not Essentially Match" Limitation of Claims 10–16 Is Indefinite

138. As explained below, claims 10–16 are indefinite.

139. Claim 10 recites that the "shaft threading contour" of the "shaft threading" of the "distal portion" of the "temporary fastener" "does not essentially match the implant abutment threads contour." Ex. 1001, 28:16–19. Claims 11–16 depend from claim 10 but add limitations that do not modify the above limitation.

140. Claims 10–16 are indefinite because the "does not essentially match" limitation, when read in light of the '781 patent specification and the prosecution history, fails to inform, with reasonable certainty, those skilled in the art about the scope of the invention.

141. This limitation requires the "shaft threading contour" of the temporary fastener to "not essentially match" the "threads contour" of the implant abutment.

142. The '781 patent specification states (in a paragraph that defines a long list of common words) that "the term[] 'essentially' mean[s] ± 10 percent." Ex. 1001, 7:61–62.

143. However, the specification does not set forth any standard or guidance that explains how to apply this definition to determine whether or not the thread "contour" of the temporary fastener and the thread "contour" of the implant abutment "essentially match." In particular, the specification does not explain

which feature or features of the two thread contours may vary by up to 10 percent but still "essentially match," even though there are several features that a POSA would consider.

144. For example, the 10 percent variance could apply to one or more of: (a) the proximal thread angle; (b) the distal thread angle; (c) the thread depth; (d) the thread contact area of the temporary fastener threads with the abutment threads; or (e) the thread volume of the temporary fastener threads in the abutment threads. However, the specification does not explain whether the 10 percent variance applies to any of these features or to some other feature(s).

145. Moreover, the specification does not explain whether or not the thread contour of the asymmetric threads 40 of the temporary fastener of Figure 75 "essentially match[es]" the thread contour of the symmetric threads 18 of implant abutment 8 of Figure 9.

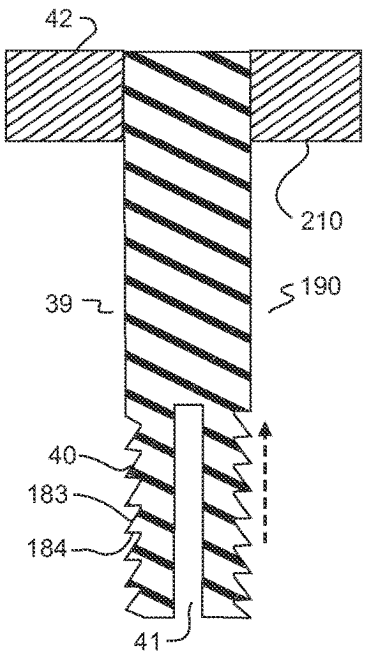

FIG. 75

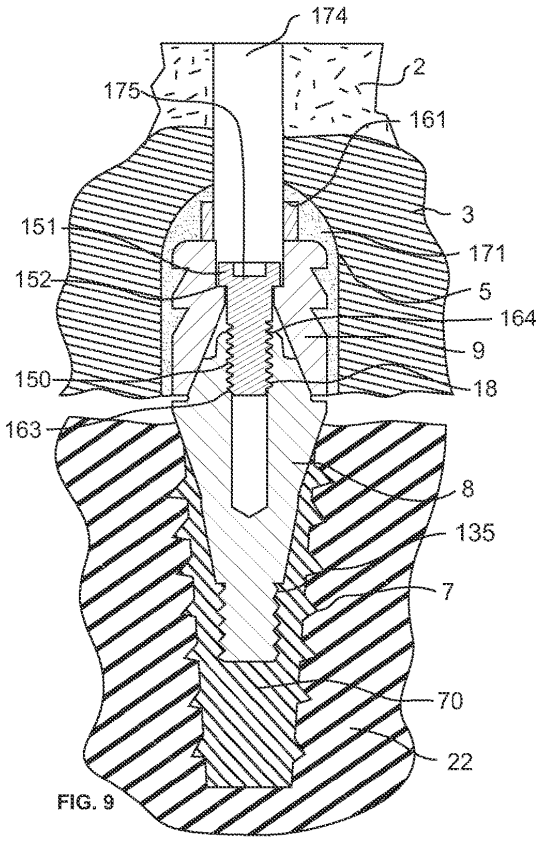

FIG. 9

146. A POSA would understand from Figures 9 and 75 that the thread contour of asymmetric threads 40 does not "match" the thread contour of symmetric threads 18. However, it is not clear to a POSA from these figures whether or not they do not "essentially match." And nothing else in the specification offers any guidance on this issue.

147. The examiner reached the same conclusion during prosecution of the '992 patent. The examiner objected to the drawings and the specification because they did not disclose the limitation "[t]he male threading profile which <u>does not essentially match</u> the male threading profile of the definitive screw shaft" in

pending claim 26. Ex. 1015 at 202–203 (emphasis added). The examiner explained "[t]he specification does not appear to provide such a description, and elected Fig. 75 does not appear to show a male threading profile which does not essentially match the male threading profile of the definitive screw shaft." Ex. 1015 at 208.

148. During prosecution of the '781 patent, the examiner stated, in rejecting pending claim 18 (which issued as claim 1), that Figure 1 (below left) of Berrevoets depicted a temporary fastener that disclosed the "does not essentially match" limitation, whereas Figure 8 (below right) of Lannan depicted a temporary fastener that does not disclose this limitation. Ex. 1020 at 939–940.

149. In other words, the examiner concluded that the thread contour of the helical threads 28 interrupted by the slots 29 in Figure 1 of Berrevoets "does not essentially match" the abutment thread contour but that the thread contour of the uninterrupted threads 98 in Figure 8 of Lannan does "essentially match" the abutment thread contour. *Id.*

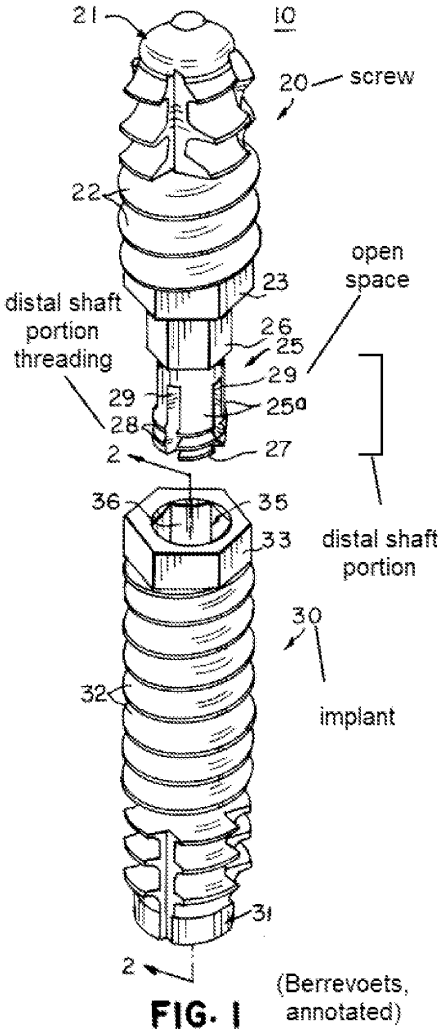

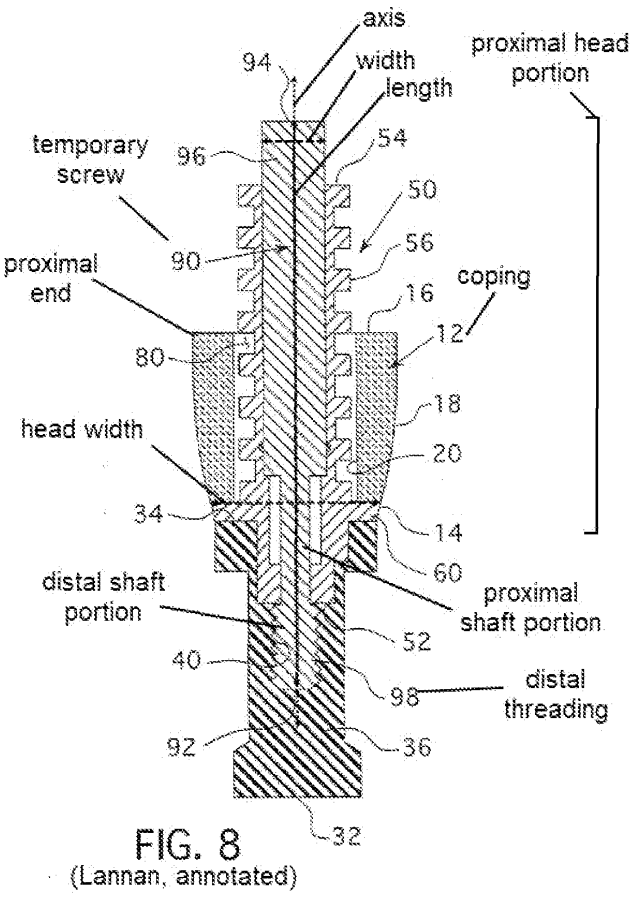

Ex. 1020 at 934 (Fig. 1 (annotated by examiner)); *id.* at 932 (Fig. 8 (annotated by examiner)).

150. However, these statements by the examiner about these prior art references do not provide any further guidance that explains how to determine whether or not the thread contours of the temporary fastener and the implant abutment "essentially match."

151. Therefore, the "does not essentially match" limitation is indefinite because the claim language, when read in light of the specification and the prosecution history, does not inform a POSA with reasonable certainty about the scope of the limitation, i.e. whether the two thread contours do or do not "essentially match."

B. Ground 2: Claims 1–16 Are Not Adequately Described or Enabled

152. As explained below, claims 1–16 do not comply with the written description requirement or the enablement requirement because the '781 patent specification does not support the full claim scope.

1. Independent Claims 1, 6, 8 and 10 Are Not Adequately Described or Enabled By the '781 Patent Specification

153. I understand that the issue of whether the '781 patent specification adequately describes and enables claims 1–16 must be analyzed separately for each claim. Thus, I begin with an analysis of the independent claims, claims 1, 6, 8 and 10, and then address dependent claims 2–5, 7, 9 and 11–16.

154. As explained below, in my opinion, the '781 patent specification does not support independent claims 1, 6, 8 and 10 because the '781 patent specification does not contain an adequate written description of or enable the full scope of these claims, for two independent reasons.

a. The ’781 Patent Specification Does Not Support the Full Scope of the Different Thread Pattern Limitations

155. First, in my opinion, the ’781 patent specification does not contain an adequate written description of or enable the full scope of the limitations in independent claims 1, 6, 8 and 10 that encompass any temporary fastener thread pattern that is different than the definitive screw and implant abutment thread pattern.

156. As explained above, the independent claims are not limited to temporary fasteners with buttress threads, as described and as depicted in Figure 75, but instead are much broader. Claim 1 requires the temporary fastener to have a “threading contact area” with the implant abutment that is “less than” the “threading contact area” of the definitive screw with the abutment. Ex. 1001, 26:14–24. Claim 8 requires the definitive screw to have a “volume” of “post material” that is “greater than” a “volume” of “shaft material” of the temporary fastener. Ex. 1001, 27:51–60. Claim 10 requires the “temporary fastener” to have a “shaft threading contour” that “does not essentially match” the “implant abutment threads contour.” Ex. 1001, 28:16–20. Finally, claim 6 does not include any limitation that requires the thread pattern of the temporary fastener to be the same or different than the definitive screw and implant abutment thread pattern, and therefore encompasses all different thread patterns. Ex. 1001, 26:50–27:9.

157. The ’781 patent specification does not contain an adequate written description of or enable the full scope of these limitations. The ’781 patent specification discloses only one temporary fastener embodiment with a different thread pattern or profile: the asymmetric buttress thread of the temporary fastener of Figure 75, which is different than the symmetric thread of the definitive screw and the implant abutment of Figure 9. Ex. 1001, 23:10–41, Figs. 9, 75.

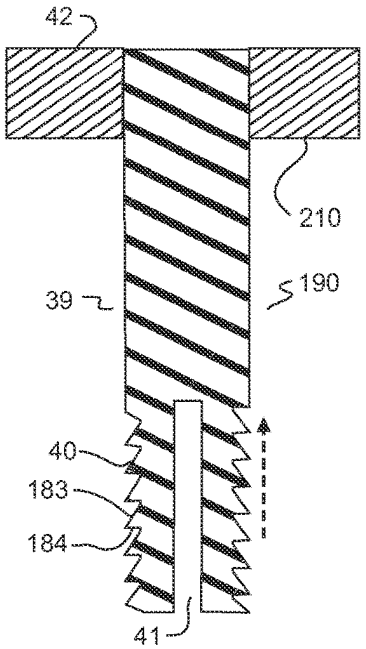

FIG. 75

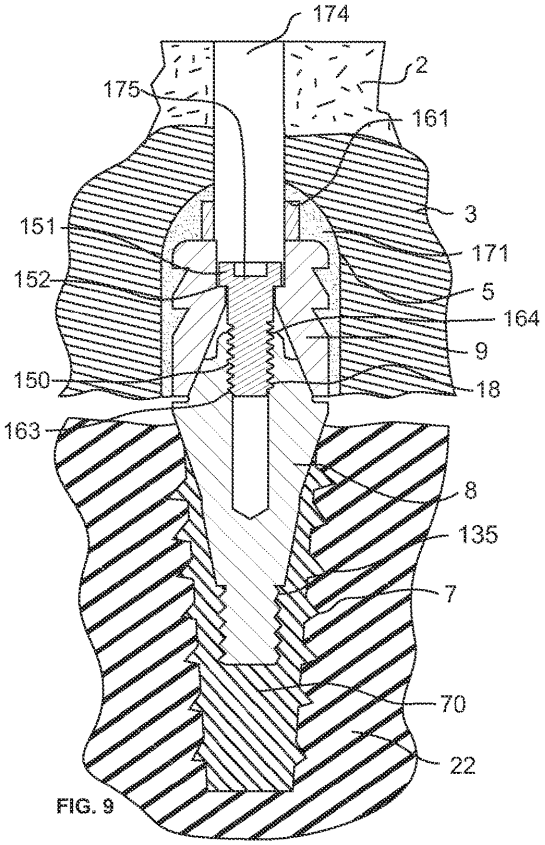

FIG. 9

158. During prosecution of the ’730 Application that issued as the parent ’992 patent, Patent Owner told the examiner that the “thread profile” and “threading shape” of threads 40 of the temporary fastener in Figure 75 are “not the

same" and "different" than the threads of definitive screw and the implant abutment in Figure 9, and included this annotated figure:

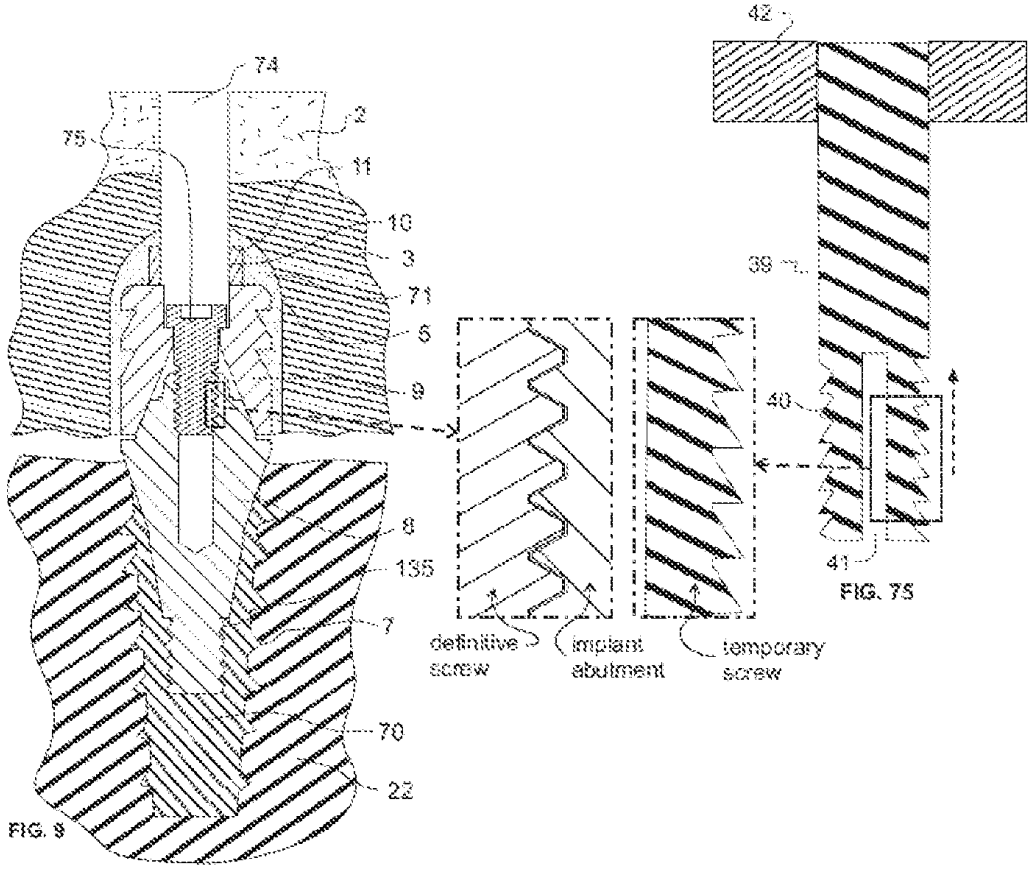

Ex. 1015 at 295–299.

159. Figure 75 is the only temporary fastener embodiment disclosed in the specification with a different thread pattern than the symmetric thread pattern of the definitive screw and the implant abutment. In my opinion, the buttress thread of the Figure 75 embodiment and the associated description in the specification does not constitute an adequate written description of or enable the full scope of claims 1, 6, 8 and 10, which encompass any and all thread pattern differences.

160. For example, these claims encompass hypothetical, undisclosed temporary fasteners with reverse buttress threads, like thread A in Figure 1 of Gracco (below left) but the opposite of the buttress thread in Figure 75 (below right). Gracco (Ex. 1006), Fig. 1(A); ’992 Patent (Ex. 1001), Fig. 75.

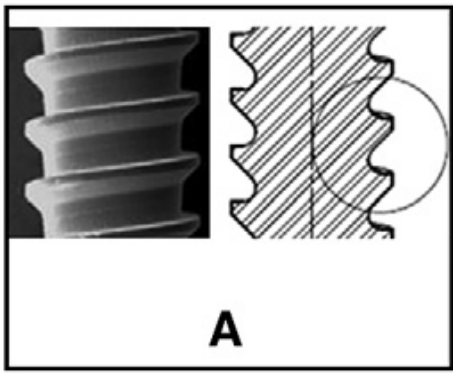

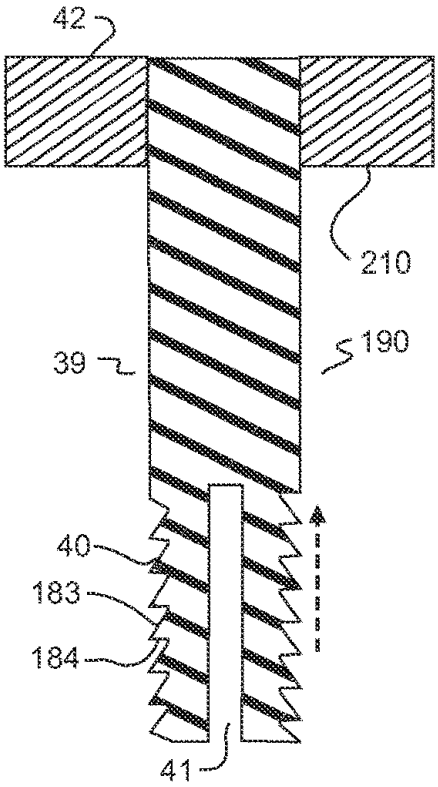

FIG. 75

161. The ’781 patent specification does not include any description of any temporary fastener embodiment with a reverse buttress thread, much less a description that explains how such a temporary fastener would be released from the abutment by an axial force without having to be unscrewed. The claims also encompass myriad other undisclosed embodiments with different thread patterns, including for example threads with truncated or rounded peaks and/or smaller

thread angles than the definitive screw and implant abutment threads. The ’781 patent specification does not describe any of these other embodiments that are encompassed within claims 1, 6, 8 and 10, much less do so in an enabling manner. Accordingly, a POSA would understand that the inventors were not in possession of any of these embodiments. Therefore, the ’781 patent specification does not support the full scope of claims 1, 6, 8 and 10.

b. The ’781 Patent Specification Does Not Support the Full Scope of the Limitations that Require an Axial Force to Release the Temporary Fastener

162. Second, in my opinion, the ’781 patent specification does not support independent claims 1, 6, 8 and 10 because the claims are not limited to temporary fasteners that have a split-post structure with deflecting legs, as in the only disclosed embodiment of Figure 75. Instead, the claims encompass any threaded temporary fastener that can be pulled out of the abutment without having to be unscrewed, even if it does not have a split post with deflecting legs. The claims merely require that the temporary fastener must release from the abutment when an axial force is applied and (for claims 1, 6 and 8) that the temporary fastener threads do not continuously engage the abutment threads. The ’781 patent specification does not describe any temporary fastener without a split post with deflecting legs that can be pulled out of the abutment without having to be unscrewed.

163. Claim 1 recites that the temporary fastener "is configured to release at least a portion of the temporary fastener and the coping from the implant abutment as a unit when an axial release force is applied in a proximal direction" and that the "distal shaft portion" of the temporary fastener "does not engage the implant abutment threads continuously." Ex. 1001, 26:4–13. Claims 6 and 8 have similar limitations. Ex. 1001, 26:66–27:10, 27:41–50. Claim 10 does not require non-continuous temporary fastener threads like claims 1, 6 and 8, but claim 10 does recite that the temporary fastener "is configured so that in response to application of an axial release force above a predetermined value in a proximal direction, the coping and the temporary fastener are released as a unit from the implant abutment." Ex. 1001, 28:32–36. None of these claims require the temporary fastener to have a split post with deflecting legs to enable the fastener to be pulled out without having to be unscrewed. Therefore, these claims encompass all embodiments in which a threaded temporary fastener is released by an axial force in the proximal direction, including those without a split post.

164. The '781 patent specification does not support this claim scope because it does not describe any temporary fastener that does not have a split post with deflecting legs but that can be pulled out without being unscrewed. The only temporary fastener that can be released without having to be unscrewed disclosed in the '781 patent specification is the embodiment of Figure 75. As discussed

above, the ’781 patent specification explains that buttress thread 40 and the deflecting structures of the split post created by slot 41 enable the temporary fastener to be pulled out of the abutment without being unscrewed. In particular, the ’781 patent specification describes this as follows:

> In some embodiments, the threaded end of the post portion of the temporary fastener has a deflecting feature that allows the post to engage or disengage the abutment threads through axial motion instead of a rotary screw motion. (’781 patent (Ex. 1001) at 5:31–35);
>
> FIG. 75 is a cross-sectional view of a temporary screw embodiment incorporating a split post that has deflecting sections with screw threads shaped to facilitate axial separation without unscrewing the post threads. … (Ex. 1001 at 11:31–34);
>
> The inventive concepts disclosed are not meant to be restricted to a temporary attachment post with standard screw threads that both engage and disengage the threads in the implant abutment through rotations. For example, alternate separable temporary attachment posts embodiments are possible providing features that allow the post to removably hold the coping to the abutment by other means than a separable cap. For example, as shown in FIG. 75 an alignment fastener post 39 may contain a separable threaded or serrated portion 40 that engages the screw threads in the abutment for pick-up, but that will release with axial force after. FIG. 75 shows a temporary fastener 190 with a head 42 portion and an attachment post portion 39. The

attachment post portion 39 is shown as having a slot 41 and asymmetric threads or serrations 40 that have proximal flank 183 and a distal flank 184. This asymmetric threading still allows the temporary attachment post portion 39 to be inserted through rotation like other temporary screw embodiments for alignment for coping pick-up. The post 39 may be subsequently extracted with a separation force in the axial direction. Although the threads could be designed to provide engagement with the implant abutment threads through axial motion in the opposite direction to the arrow shown in FIG. 75 , rotation to a design torque on engagement is generally preferred. If the post 39 is designed to be pulled out of the abutment during the coping pick-up process, it will subsequently need to be removed from flange 42 and the prosthesis assembly. Since there is no processing impact on patient comfort, higher mechanical forces or a broader range of energy or chemical processing may be employed to remove the post 39 from the prosthesis 3 after coping 9 pick-up. (Ex. 1001 at 23:10–41);

For example, the split post bottom structure shown in FIG. 75 which allows axial extraction … (Ex. 1001 at 24:58–59).

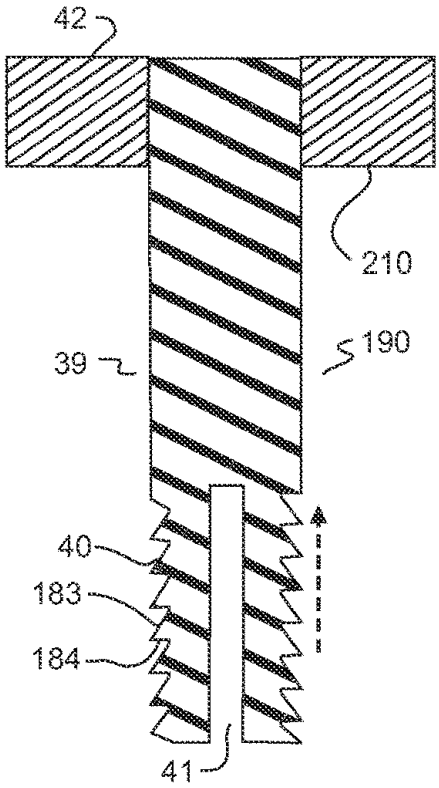

FIG. 75

165. Claims 1, 6, 8 and 10 are much broader than the disclosed embodiment because they do not require the temporary fastener to have a split post with deflecting sections that permits an axial force to release the temporary fastener from the abutment without being unscrewed. Instead, these claims merely require that an axial force release the temporary fastener. Ex. 1001, 26:4–13, 26:66–27:10, 27:41–50, 28:32–36. Thus, the claims encompass all embodiments in which an axial force releases the temporary fastener, regardless of whether the screw has a split post with deflecting sections.

166. This broad claim scope is vividly illustrated by Patent Owner's patent infringement complaint against Petitioner, which alleges that the accused

NeoConvert "Pin Capture" component satisfies the limitation in claim 1 that requires an axial force to release the temporary fastener from the abutment. Ex. 1021, ¶50. As shown below, the accused component does not have a split post with deflecting sections that permit it to be released from the abutment without being unscrewed. Instead, it can be pulled out because its threads detach.

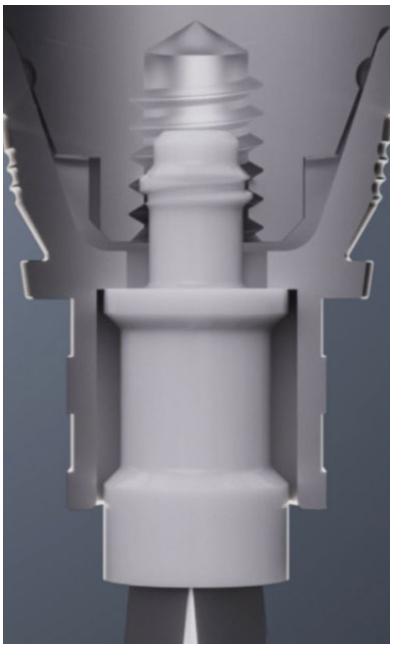

Pin Capture in abutment

Pin Capture after removal (with detached threads)

Ex. 1019 at 4, 5. This is a different release mechanism than the deflecting sections of the split-post structure of the temporary fastener depicted in Figure 75. The '781 patent specification does not describe a temporary fastener with threads that detach when the fastener is pulled out of the abutment, much less in an enabling

manner. Therefore, a POSA would understand that the inventors were not in possession of such a temporary fastener.

167. In sum, the split-post temporary fastener of Figure 75 does not support the full scope of claims 1, 6, 8 and 10. The ’781 patent specification does not describe any temporary fastener that does not have a split-post with deflecting legs but that can be pulled out of the abutment without having to be unscrewed. Therefore, the ’781 patent specification does not support claims 1, 6, 8 and 10.

2. Dependent Claims 2–5, 7, 9 and 11–16 Are Not Adequately Described or Enabled By the ’781 Patent Specification

168. In my opinion, the ’781 patent specification does not support dependent claims 2–5, 7, 9 and 11–16, for the same two reasons as independent claims 1, 6, 8 and 10, as explained below.

a. The ’781 Patent Specification Does Not Support the Full Scope of the Different Thread Pattern Limitations

169. Dependent claims 3–5, 7, 9 and 11–14 are not supported for the same reasons as independent claim 1 (for claims 3–5, 7 and 9) and independent claim 10 (for claims 11–14) because these dependent claims add limitations that do not modify the limitations in the independent claims that encompass any different thread pattern. ’781 patent (Ex. 1001), 26:28–40, 27:11–14, 27:61–63, 28:42–54.

170. Dependent claims 2, 15 and 16 do contain claim limitations related to the different thread patterns. However, as explained below, these claims are not

supported because the buttress thread of the Figure 75 embodiment disclosed in the ’781 patent specification does not support their full scope.

171. Claim 2 adds the limitation “wherein the distal shaft portion of the temporary fastener comprises asymmetric threading.” Ex. 1001, 26:25–27. This claim scope is not described or enabled by the ’781 patent specification because the claim encompasses all other asymmetric temporary fastener threads, in addition to an asymmetric buttress thread as depicted in Figure 75. For example, claim 3 encompasses reverse buttress threads which, as discussed above, are not described in the ’781 patent specification.

172. Claim 15 adds “further comprising a definitive screw comprising threads configured to engage the implant abutment, wherein a maximal width of the distal portion of the shaft of the temporary fastener is smaller than a maximal width of the threads of the definitive screw.” Ex. 1001, 28:55–59. This claim scope is not described or enabled by the ’781 patent specification because it encompasses many temporary fastener thread patterns that are not described, including reverse buttress threads and symmetric threads with truncated or rounded peaks and/or smaller thread angles.

173. Claim 16 adds the limitation “further comprising a definitive screw comprising threads configured to engage the implant abutment, wherein a profile pattern of the threading of the temporary fastener is configured to define a first

abutment contact area with the threads of the implant abutment, wherein a profile pattern of the threads of the definitive screw is configured to define a second abutment contact area with the threads of the implant abutment, and wherein the first abutment contact area is less than the second abutment contact area." Ex. 1001, 28:60–29:2. This limitation is similar to the "threading contact area" limitation of claim 1, discussed above. This claim scope is not supported by the '781 patent specification because the claim encompasses many undisclosed temporary fastener thread patterns in addition to a buttress thread as depicted in Figure 75. For example, claim 16 encompasses not only reverse buttress threads but also symmetric threads with truncated or rounded peaks and/or smaller (shallower) thread angles, none of which are described in the '781 patent specification.

174. In sum, claims 2–5, 7, 9 and 11–16 are not supported by the '781 patent specification.

b. The '781 Patent Specification Does Not Support the Full Scope of the Limitations that Require an Axial Force to Release the Temporary Fastener

175. Dependent claims 2–5, 11–13 and 15–16 are not supported for the same reasons as independent claim 1 (for claims 2–5) and independent claim 10 (for claims 11–13 and 15–16) because these dependent claims add limitations that do not require the temporary fastener to have a split-post structure with deflecting

legs that permit the fastener to be pulled out without being unscrewed. Ex. 1001, 26:25–34, 28:42–48, 28:54–29:2.

176. Dependent claim 7 adds the limitation "wherein the distal shaft portion of the temporary fastener comprises an open space, and wherein a portion of the axis is located within the open space." Ex. 1001, 27:11–14. Dependent claim 9 adds the limitation "wherein the temporary fastener is polymeric, and wherein the distal shaft portion of the temporary fastener is hollow." Ex. 1001, 27:61–63. These additional limitations do not require the temporary fastener to have a split post with deflecting sections. For example, the claims encompass undisclosed embodiments in which the fastener includes a hollow bore at the distal end, but does not include a slot that creates a split post with deflecting sections. Therefore, claims 7 and 9 are not supported for the same reason as claim 1, namely, because the '781 patent specification does not disclose any temporary fastener that can be pulled out of the abutment without having to be unscrewed but that does not have a split post with deflecting legs.

177. In sum, claims 2–5, 7, 9, 11–13 and 15–16 are not supported by the '781 patent specification.

3. The ’781 Patent Specification Does Not Support the “Securing the Coping to the Threads of the Implant Abutment” Limitation of Claims 1–9

178. The ’781 patent specification does not adequately describe or enable the “securing the coping to the threads of the implant abutment” limitation in claims 1–9.

179. Independent claim 1 recites that the “definitive screw” has “a distal post portion having threads configured for securing the coping to the threads of the implant abutment.” Ex. 1001, 25:48–51. Independent claims 6 and 8 recite that the “definitive screw” has “a distal post portion having threads for securing the coping to the threads of the implant abutment.” Ex. 1001, 26:44–47, 27:18–21. Dependent claims 2–5, 7 and 9 depend from claim 1 but add limitations that do not modify the above limitation in claim 1.

180. The ’781 patent specification does not describe or enable these limitations. The disclosed definitive screw threads secure the coping to the abutment, but the definitive screw threads do <u>not</u> secure the coping to <u>the threads</u> of the abutment as recited in the claims.

181. As shown in Figure 9 below, male threads 150 of definitive screw 175 are threaded into female threads 18 of abutment 8 to secure coping 9 to abutment 8. Ex. 1001, 15:29–40, Fig. 9. However, threads 150 of definitive screw 175 do

not secure coping 9 to threads 18 of abutment 8 as recited. As seen in Figure 9, coping 9 does not make any contact with threads 18 of abutment 8. *Id.*, Fig. 9.

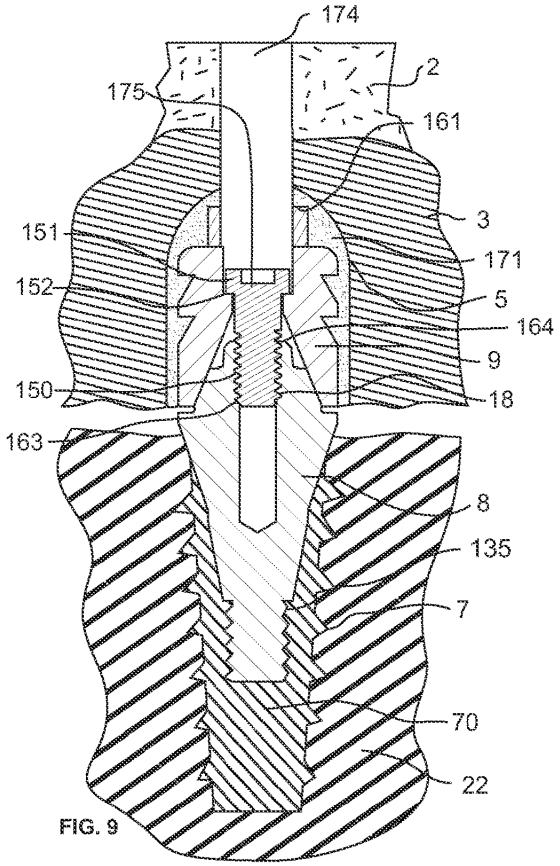

182. Therefore, claims 1–9 are not supported by the '781 patent specification.

4. The '781 Patent Specification Does Not Support the "Does Not Engage the Implant Abutment Threads Continuously" Limitation of Claims 1–9

183. The '781 patent specification does not adequately describe or enable the "does not engage the implant abutment threads continuously" limitation of claims 1–9.

184. Claims 1, 6 and 8 recite "the distal shaft portion [of the temporary fastener] is sized and configured so that it does not engage the implant abutment threads continuously between a most distal position of the distal shaft portion and a proximal end of the implant abutment threads." Ex. 1001, 26:9–13, 27:6–10, 27:46–50. Dependent claims 2–5, 7 and 9 depend from claim 1 but do not add limitations that modify the above limitation.

185. In the co-pending litigation, Patent Owner alleges that Petitioner's NeoConvert "Pin Capture" device satisfies this limitation, even though its threads are continuous, because the device's threads are threaded into only a portion of the abutment threads, such that abutment threads above and below the device threads are not engaged by the device threads:

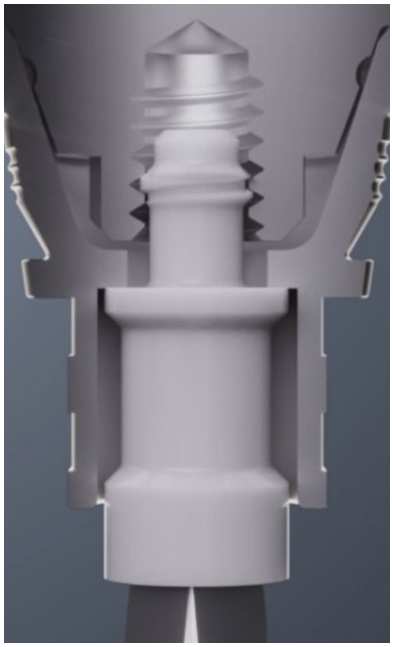

Ex. 1019 at 4; Ex. 1021, ¶51.

186. Therefore, the claim scope asserted by Patent Owner for this limitation encompasses temporary fasteners with continuous threads that are threaded into only a portion of the abutment threads, leaving abutment threads above and/or below the temporary fastener empty.

187. This claim scope is not described or enabled by the ’781 patent specification. The only temporary fastener with threads that do not engage the abutment threads continuously that is described is the embodiment of Figure 75. Threads 40 of this temporary fastener do not engage the abutment threads 18 continuously because the threads 40 are interrupted on either side of the post 39 by the open space created by the slot 41.

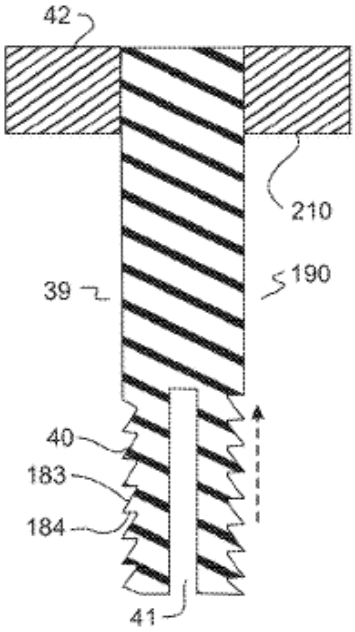

FIG. 75

Ex. 1001, 23:17–34, Fig. 75.

188. The ’781 patent specification does not describe any temporary fastener with continuous threads that are threaded into only a portion of the abutment threads, leaving abutment threads above and/or below the temporary fastener empty.

189. Therefore, claims 1–9 are not supported by the ’781 patent specification.

5. The ’781 Patent Specification Does Not Support the “Outer Surface … Deform” Limitation of Claim 5

190. The ’781 patent specification does not adequately describe or enable the “outer surface … deform” limitation of claim 5.

191. Claim 5 adds the limitation “wherein the distal shaft portion of the temporary fastener comprises an outer surface which is sized and configured to deform in response to the axial release force in the proximal direction whereby the at least a portion of the temporary fastener and the coping are released as a unit.” Ex. 1001, 26:35–40.

192. The ’781 patent specification does not support claim 5 because it does not describe any temporary fastener with an “outer surface” that “deform[s]” when the temporary fastener and the coping are pulled out of the abutment. In particular, the ’781 patent specification does not describe the outer surface of the temporary fastener of Figure 75 as deforming upon release. Instead, as discussed above, the ’781 patent specification explains that the temporary fastener can be pulled out

without being unscrewed because of the split post with deflecting sections and buttress threads. Ex. 1001, 5:31–35, 11:31–34, 23:17–30, 24:58–59, Fig. 75. Moreover, the ’781 patent specification criticizes temporary fasteners that have silicone threads, which a POSA would understand would be deformable, as taught for example by Poovey. ’781 patent (Ex. 1001) at 4:16–25; Poovey (Ex. 1005), [0079], [0084].

193. Therefore, claim 5 is not supported by the ’781 patent specification.

6. The ’781 Patent Specification Does Not Support the “Wherein the Temporary Fastener Is Configured To Release” Limitation of Claim 6

194. The ’781 patent specification does not adequately describe or enable the “wherein the temporary fastener is configured to release” limitation of claim 6.

195. As explained above in section X.A.1, claim 6 does not include any structural limitations for the temporary fastener that relate to its ability to be pulled out of the abutment without being unscrewed. Instead, claim 6 includes only the functional limitation quoted above in section X.A.1, which recites that the temporary fastener is “configured to” perform the recited function of releasing from the abutment. Ex. 1001, 26:66–27:5.

196. As explained above, given this purely functional limitation, claim 6 purports to encompass all threaded temporary fasteners that perform the recited “release” function. However, this broad claim scope is not described or enabled by

the ’781 patent specification. The only disclosed temporary fastener embodiment that can be pulled out of the abutment without being unscrewed is the embodiment of Figure 75. Moreover, the specification explains that this temporary fastener can be pulled out of the abutment because of asymmetric buttress threads 40 and the deflecting legs created by slot 41. Ex. 1001, 5:31–35, 11:31–34, 23:17–30, 24:58–59, Fig. 75. The disclosure of this embodiment does not support the full claim scope, which purports to cover any threaded temporary fastener that is “configured to” perform the recited function.

197. Therefore, the ’781 patent specification does not support the full scope of claim 6.

7. The ’781 Patent Specification Does Not Support the “Distal Shaft … Configured to Deform” Limitation of Claim 14

198. The ’781 patent specification does not adequately describe or enable the “distal shaft … configured to deform” limitation of claim 14.

199. Claim 14 adds “wherein the distal shaft portion of the shaft of the temporary fastener is configured to deform during the application of the axial force in the proximal direction to thereby release the coping and the temporary fastener as the unit from the implant abutment.” Ex. 1001, 28:49–54.

200. I understand that in the co-pending litigation, Patent Owner alleges that Petitioner’s NeoConvert “Pin Capture” device satisfies this limitation. In particular, I understand that Patent Owner alleges that the accused device deforms

because its threads detach when the device is pulled out of the abutment, as shown in the image below right:

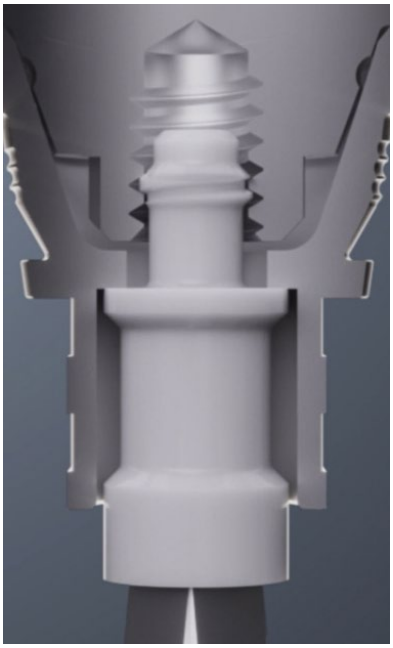

Before removal

After removal

Ex. 1019 at 4, 5.

201. Therefore, the claim scope sought by Patent Owner for this limitation encompasses temporary fasteners with threads that detach when the fastener is pulled out of the abutment.

202. This claim scope is not described or enabled by the ’781 patent specification. The specification does not describe any temporary fastener that can be pulled out of the abutment without being unscrewed because its threads detach. The only disclosed temporary fastener that can be pulled out of the abutment without being unscrewed is the embodiment of Figure 75, which can be pulled out

not because its threads detach but instead because of the asymmetric threads and the deflecting legs. Ex. 1001, 5:31–35, 11:31–34, 23:17–30, 24:58–59, Fig. 75.

203. Therefore, claim 14 is not supported by the ’781 patent specification.

8. The ’781 Patent Specification Does Not Support the “Smaller … Maximal Width” Limitation of Claim 15

204. The ’781 patent specification does not support the “smaller … maximal width” limitation of claim 15.

205. Claim 15 adds “further comprising a definitive screw comprising threads configured to engage the implant abutment, wherein a maximal width of the distal portion of the shaft of the temporary fastener is smaller than a maximal width of the threads of the definitive screw.” Ex. 1001, 28:54–59.

206. The ’781 patent specification does not describe or enable claim 15 because it does not describe any temporary fastener that can be pulled out without being unscrewed in which the distal portion of the shaft has a maximal width that is smaller than the maximal width of the definitive screw threads.

207. In particular, nothing in Figures 9 or 75, or the accompanying description, indicates that the maximum width of the distal portion of the shaft (post 39) of the temporary fastener in Figure 75 is smaller than the maximum width of the threads of definitive screw 175 in Figure 9.

208. If anything, as shown in Figure 75 and Figure 9 below, the thread peaks of the temporary fastener and the definitive screw appear to have the same diameter as the proximal unthreaded portion of the shaft.

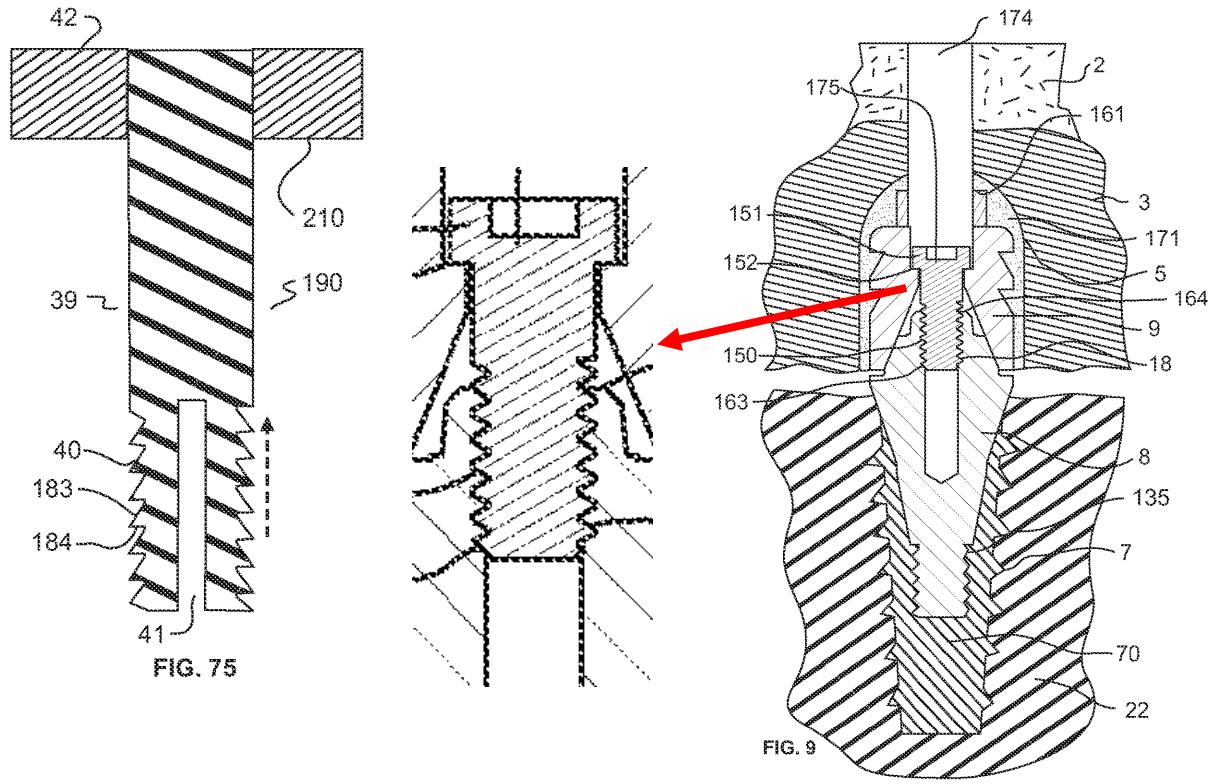

Ex. 1001, 15:29–40, 23:17–30, Figs. 9, 75 (annotated).

209. Therefore, claim 15 is not supported by the ’781 patent specification.

C. <u>Ground 3</u>: Claims 10, 12, 15 and 16 Would Have Been Obvious Based on Bernhard In View of Poovey and Gracco

210. In my opinion, as explained below, claims 10, 12, 15 and 16 would have been obvious, before the earliest possible effective filing date of October 9, 2018, based on Bernhard in view of Poovey and Gracco.

211. In my analysis below, I cite to exemplary portions of Bernhard, Poovey and Gracco that disclose or are relevant to each claim element. However, my citations are not exhaustive.

1. Motivation to Modify Bernhard In View of Poovey and Gracco

212. As explained in Section VI.C above, Bernhard discloses various dental systems that include various designs for copings, abutments, permanent screws, and temporary coping-abutment fasteners that employ snap-fit or friction-fit connections to achieve a hybrid pick-up process.

213. For example, Figure 12 of Bernhard, shown below, depicts a dental system including a coping 700, an abutment 650, and a threaded fastener 750 with a threaded shaft 754 that is threaded into the threaded bore 654 of the abutment 650 to permanently connect the abutment 650 to the coping 700. Bernhard (Ex. 1003), [0105], [0130], [0134], Figs. 3, 12. Figure 8, also shown below, depicts the coping 700 temporarily connected to the abutment 650 by a resilient spring 708 that engages with an annular slot 652. Ex. 1003, [0124], [0126], [0130], Fig. 8.

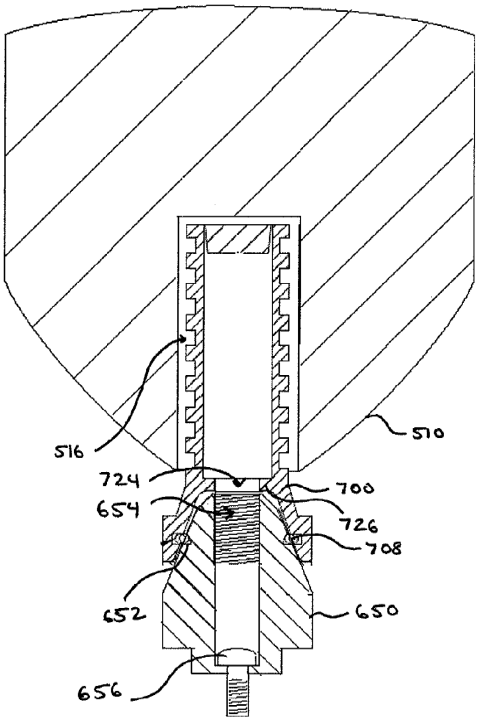

Figure 8

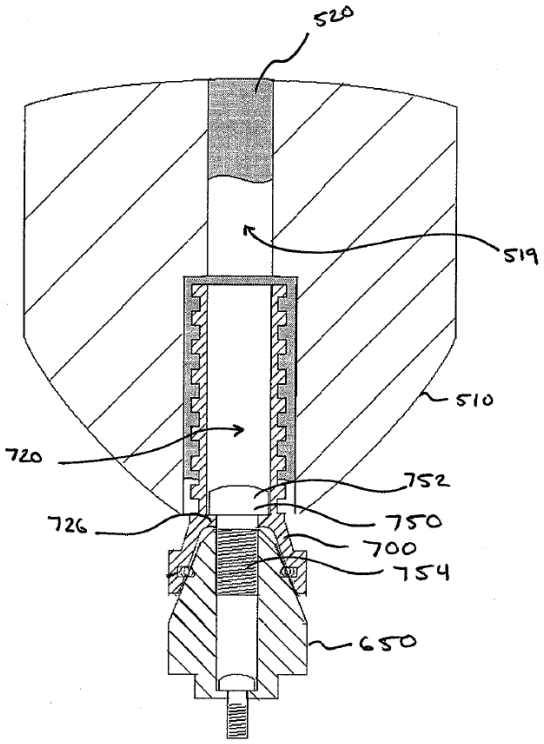

Figure 12

214. As explained below, it would have been obvious to a POSA, before October 9, 2018, in view of Bernhard, Poovey and Gracco, to modify the system depicted in Figures 8–12 of Bernhard above to temporarily connect the coping 700 to the abutment 650 with a temporary fastener with flexible threads in a buttress thread pattern. In particular, this temporary fastener would be threaded into the bore 654 of the abutment 650 but pulled out of the abutment 650 without being unscrewed when the prosthesis is removed during pick-up processing.

215. In my opinion, a POSA would have been motivated by Bernhard and Poovey to use a threaded temporary fastener to temporarily connect the coping 700

to the abutment 650, because the engagement of the temporary fastener threads with the abutment threads in bore 654 would make the temporary connection between the coping 700 and the abutment 650 more secure, reliable and stable than a snap-fit mechanism.

216. In particular, Bernhard explains that a threaded screw can be used to bolster the connection between the coping and the abutment in order "to reduce the likelihood of inadvertent detachment" of the coping from the abutment, i.e. to make the connection more secure, reliable and stable. Bernhard (Ex. 1003), [0082], Fig. 1. Bernhard explains that "the coping 130 and the abutment 120 can be attached using a separate fastener such as prosthetic screw 138" and that "[t]he prosthetic screw 138 can pass through a bore 139 of the coping 130 and positively engage a connection feature of the abutment 120, such as threaded bore 128, or of the coupling screw 16 thereby securely attaching the coping 130 to the abutment 120," which "can advantageously further reduce the likelihood of inadvertent detachment of the coping 130 from the abutment." Ex. 1003, [0082]. Moreover, Poovey teaches that his threaded impression coping securing screw that is threaded into the bore increases stability. Poovey (Ex. 1005), [0084].

217. In my opinion, a POSA also would have been motivated to use a threaded temporary fastener in Bernhard's system because the bore 654 of the abutment 650 already includes threads into which the temporary fastener could be

threaded without having to modify the bore 654. Indeed, Bernhard teaches that the temporary connection can be achieved using the existing threading "located either entirely or partially along an interior surface of a bore, such as bore 125, of the abutment 120." Ex. 1003, [0076].

218. As a result, in addition to being more stable, reliable and secure, a threaded temporary fastener also would be simpler and more straightforward. In my experience, snap-fit mechanisms can be difficult to engineer and manufacture, require greater manufacturing precision and related expense, and even when properly executed, often provide less stability than threaded connections. A POSA wishing to simplify Bernhard's hybrid pick-up process would be motivated to use a threaded temporary fastener instead of, or in addition to, a snap-fit connection.

219. A POSA would also have been motivated by Bernhard and Poovey to design the threaded temporary fastener so that it could be pulled out of abutment 650 without needing to be unscrewed, just like the temporary snap-fit connection of Bernhard and the temporary screw of Poovey. In particular, Poovey teaches that his temporary screw with flexible threads can be pulled out without being unscrewed. Poovey (Ex. 1005), [0079], [0084]. As Poovey explains:

> By using a screw that is metal with flexible or heat labile plastic threads that are large enough to be screwed into the implant, but are able to be pulled out without much force, the impression coping is then used in a closed tray method, which is easier for the dentist and

> more comfortable for the patient. But the dentist would have the benefit of accuracy of the traditional open-tray method in which the implant coping is unscrewed prior to impression removal.

Ex. 1005, [0084]. Therefore, based on Bernhard and Poovey, a POSA would have decided to use a temporary fastener with flexible threads in Bernhard's system.

220. Having decided to use a temporary fastener with flexible threads, a POSA would have understood that the design of the temporary fastener thread pattern would affect the amount of force required to pull the fastener out of the abutment 650. In particular, they would have understood that the thread pattern would need to be designed to accomplish two objectives. First, the thread pattern would need to be designed to extend sufficiently into and engage with the female threads of the bore 654 of the abutment 650 to ensure that the fastener could be threaded into the bore 654 and provide a secure, reliable and stable temporary connection. Second, the thread pattern would need to be designed to ensure that the flexible threads would compress sufficiently in the radial direction (perpendicular to the longitudinal axis of the fastener), in response to a sufficient pulling force applied to the temporary fastener in the threaded bore 654, in order to reduce the maximum thread depth of the thread pattern sufficiently to permit the fastener to be pulled out without being unscrewed.

221. Given these two objectives, a POSA would have been motivated to consider and choose from among various thread pattern designs that would be

different than the symmetric thread pattern of the threaded fastener 750, which—unlike the temporary fastener—is designed to ensure a very secure and permanent connection with the female threads of the bore 654 of the abutment 650. In particular, a POSA designing the temporary fastener would consider thread patterns with a shorter thread depth and a smaller (shallower) proximal thread angle (relative to the longitudinal axis of the fastener), to ensure that the flexible threads would compress sufficiently in the radial direction to permit the temporary fastener to be pulled out without being unscrewed.

222. One well known and obvious example of such a threaded fastener design that a POSA would consider and then choose is an asymmetric buttress thread with a smaller (shallower) proximal thread angle to permit the required radial compression of the flexible threads. A POSA would understand that the asymmetric geometry of a buttress thread permits a shorter thread depth and a smaller (shallower) proximal thread angle than a corresponding symmetric thread with the same thread pitch, as shown below.

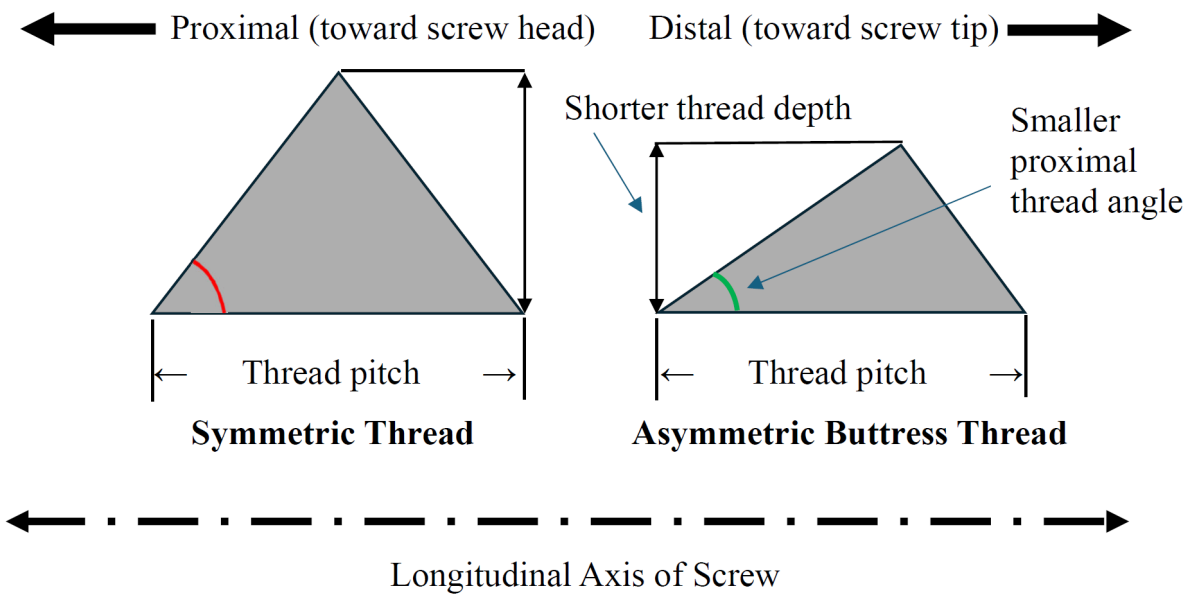

A POSA would understand that, as a result of this shorter thread depth and smaller (shallower) proximal thread angle, less pull-out force would be required to sufficiently compress the flexible threads in the radial direction to enable a buttress thread to be pulled out, as compared to a symmetric thread.

223. Gracco is consistent with this understanding. Gracco depicts an example of an asymmetric buttress thread with a smaller (shallower) proximal thread angle (thread B in Figure 1 below right). Gracco states that this buttress thread pattern required less force to pull out (in the upward direction in Figure 1) than a reverse buttress thread pattern (thread A in Figure 1 below left). Ex. 1006 at 189, Fig. 1 (A, B).

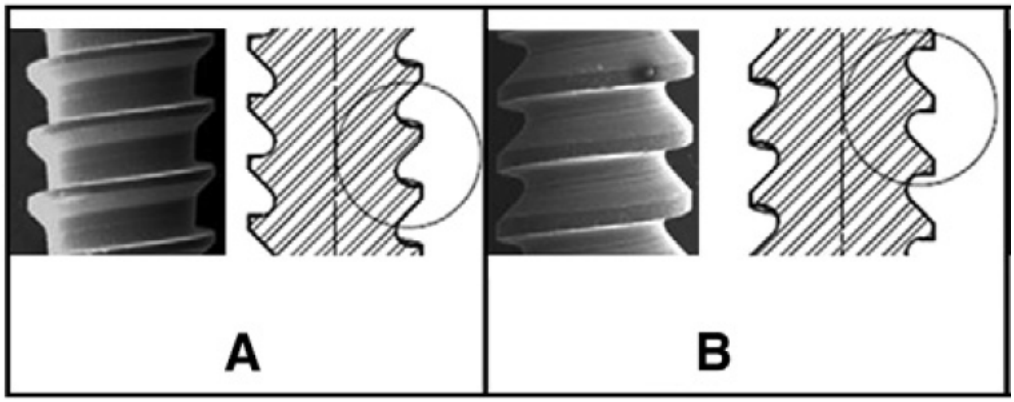

224. Based on the foregoing, a POSA would have been motivated to design the temporary fastener to have an asymmetric buttress thread with a shorter thread depth and a smaller (shallower) proximal thread angle, instead of a symmetric thread with a larger (steeper) proximal thread angle (as depicted in Figure 13 of Poovey below), in order to make the fastener easier to pull out while maintaining its secure and stable threaded connection.

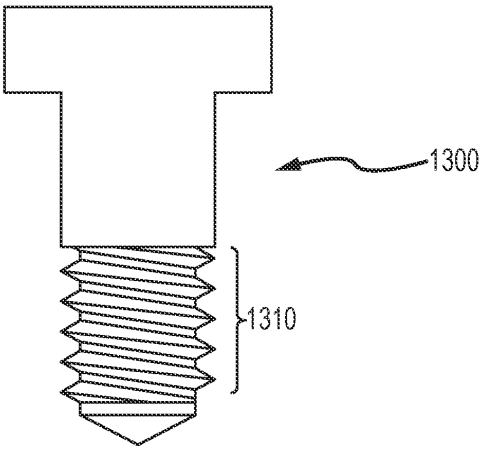

FIG.13

Poovey (Ex. 1005), Fig. 13.

225. In sum, based on Bernhard, Poovey and Gracco, a POSA would have been motivated to design a temporary fastener with flexible buttress threads that would be threaded into the bore 654 of the abutment 650 (as depicted in Figure 8 of Bernhard) but pulled out when the prosthesis is removed without having to be unscrewed.

226. In my opinion, a POSA also would have had a reasonable expectation of success designing such a temporary fastener, because this is a predictable technology and this would have been well within the level of ordinary skill.

227. In particular, a POSA would have adopted the straightforward approach of basing the design of the temporary fastener with flexible buttress threads on the design of the threaded fastener 750 in Figure 12 of Bernhard, so that the temporary fastener shaft would fit within the aperture 724 of the coping 700 and be threaded into the bore 654 of the abutment 650 in Figure 8 of Bernhard, just like the shaft 754 of the threaded fastener 750. Bernhard (Ex. 1003), Fig. 12.

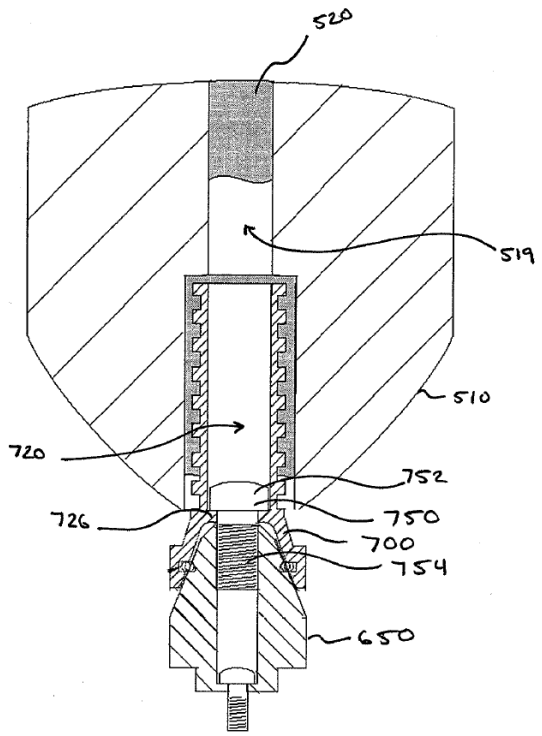

Figure 12

228. Specifically, a POSA would have designed the temporary fastener to have a shaft like shaft 754 of threaded fastener 750 and a head like head 752 of threaded fastener 750. By doing so, the temporary fastener shaft would be able to be inserted through the aperture 724 of the coping 700 and threaded into the bore 654 of the abutment 650 in Figure 8 like the shaft 754 of the threaded fastener 750 in Figure 12 of Bernhard. Moreover, the head of the temporary fastener would make contact with the rim 726 in Figure 8 like the head 752 of the fastener 750 in Figure 12, in order to temporarily connect the coping 700 to the abutment 650. Ex. 1003, Figs. 8, 12.

229. However, as explained above, based on Poovey and Gracco, a POSA designing a temporary fastener based on the design of threaded fastener 750 would have modified the threads from those of the shaft 754 in two respects, so that the temporary fastener would provide a stable, reliable and secure connection, while retaining the ability to be pulled out without having to be unscrewed to facilitate pick-up processing. First, a POSA would have modified the symmetric thread of the shaft 754 that matches the abutment threads to an asymmetric buttress thread, based on Gracco, as discussed above. Second, a POSA would have made or coated the buttress threads with silicone or another flexible plastic to make the threads flexible, based on Poovey, as discussed above.

230. In sum, it would have been obvious based on Bernhard in view of Poovey and Gracco to modify Bernhard's system to use a temporary fastener with flexible buttress threads to temporarily connect the coping 700 to the abutment 650.

231. In particular, the resulting temporary fastener with flexible buttress threads would have been merely a combination of prior art elements (Bernhard's system with Poovey's temporary screw with flexible threads modified by Gracco's buttress thread) according to known engineering methods to yield predictable results. The resulting temporary fastener also would have been a simple

substitution of one known element (a temporary screw with flexible buttress threads based on Poovey and Gracco) for another to obtain predictable results.

232. Similarly, this modification would have been merely the use of a known technique (detaching a coping and a temporary fastener from an abutment based on Bernhard) using a temporary fastener with flexible buttress threads based on Poovey and Gracco, to improve a similar device (Bernhard's system) in the same way. Similarly, the modification would have been merely applying a known technique to a known device ready for improvement to yield predictable results. In particular, a POSA would have been motivated to improve the system disclosed in Bernhard, because Bernhard's snap-fit connection would be less stable, reliable and secure, more complicated, and less elegant than using a temporary fastener, like the one disclosed in Poovey. Put another way, the system disclosed in Bernhard was ready to be improved by Poovey's screw, and a POSA would have understood that Poovey's screw had wider applications.

233. Moreover, this temporary fastener with flexible buttress threads would have been obvious to try, because it was one choice from among a finite number of identified, predictable solutions, with a reasonable expectation of success.

234. Finally, as explained in detail above, the teachings, suggestions, and motivations in the prior art (Bernhard, Poovey and Gracco) would have led a POSA to make this modification.

235. As explained below, this temporary fastener with flexible buttress threads incorporated into Bernhard's system would have all the features recited in claims 10, 12, 15 and 16.

2. Claim 10

236. In my opinion, as explained below, claim 10 would have been obvious to a POSA before October 9, 2018, based on Bernhard in view of Poovey and Gracco.

237. As explained above, it would have been obvious to modify Bernhard's system in view of Poovey and Gracco to use a temporary fastener based on the design of threaded fastener 750 but with flexible buttress threads. As explained below, this modified system would have all the limitations of claim 10.

a. Limitation 10(a): A dental system comprising

238. The preamble of claim 10 recites "[a] dental system comprising" and then the body of the claim recites the three components of the dental system: "an implant abutment," "a coping," and "a temporary fastener." Ex. 1001, 27:64–28:41.

239. As shown in Figure 12 below, Bernhard discloses a dental system comprising two of these three components—an implant abutment 650 and a coping 700—together with a definitive screw (threaded fastener 750) with a threaded shaft 754 that engages the threads in the bore 654 of the abutment 650 (depicted in

Figure 8) to permanently connect abutment 650 to coping 700. Ex. 1003, [0105], [0130], [0134], Figs. 3, 8, 12.

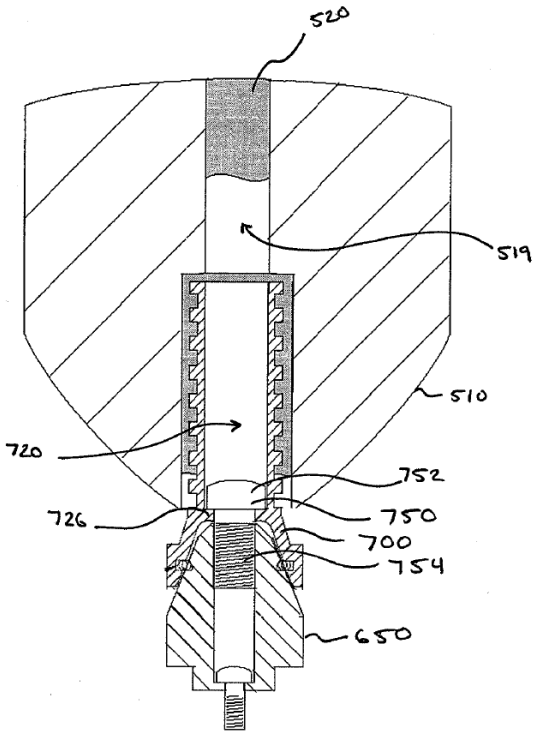

Figure 12

240. With respect to the third component of the dental system of claim 10—the "temporary fastener"—Bernhard discloses, as shown in Figure 8 below, that the coping 700 is temporarily connected to the abutment 650 by a resilient spring 708 that engages an annular slot 652 to create a snap-fit connection. Ex. 1003, [0124], [0126], [0130], Fig. 8.

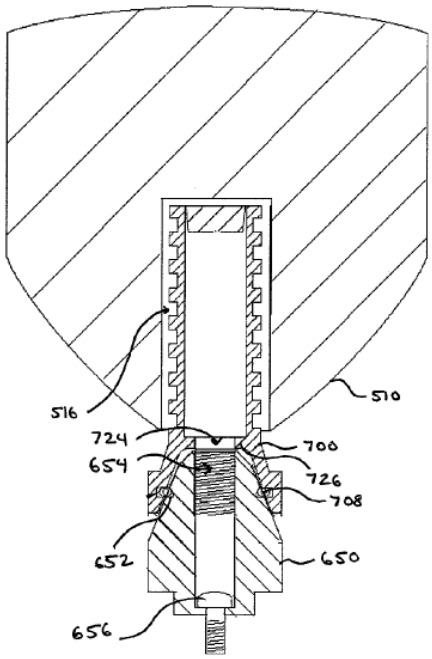

Figure 8

241. As explained above in Section X.C.1, it would have been obvious to use a temporary fastener based on the design of threaded fastener 750 but with flexible buttress threads that engage the threads in the bore 654 of the abutment 650 to temporarily connect coping 700 to abutment 650.

b. Limitation 10(b): an implant abutment having threads having an implant abutment threads contour and an implant abutment longitudinal axis

242. Bernhard discloses an implant abutment having threads having an implant abutment threads contour and an implant abutment longitudinal axis. As shown in Figure 8 above, the implant abutment 650 has an implant abutment longitudinal axis (vertical in Figure 8), and the bore 654 of the abutment 650 has female threads that have an implant abutment contour. Ex. 1003, [0130], Fig. 8.

c. Limitation 10(c): a coping having a proximal end with a central aperture

243. As shown in Figures 7A and 8 of Bernhard below, the coping 700 includes an aperture at its proximal end which leads to the central aperture 724 that leads to the bore 654 of the implant abutment 650. Ex. 1003, [0129], Figs. 7A, 8.

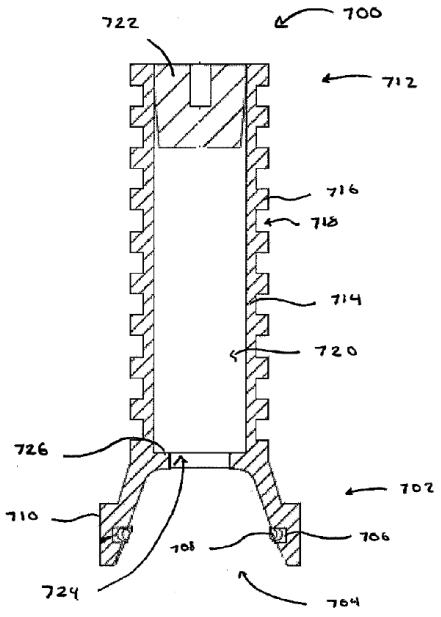

Figure 7A

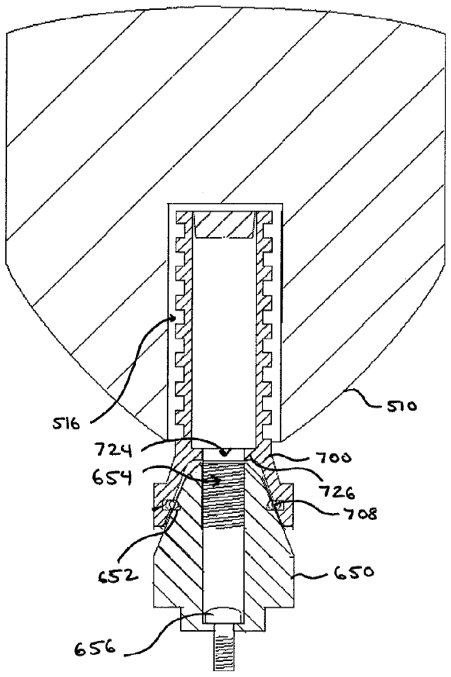

Figure 8

244. As shown in Figure 12 below, the aperture at the proximal end of the coping 700 and the central aperture 724 in the coping 700 are larger than the shaft 754 of the definitive screw (the threaded fastener 750), which passes through the aperture at the proximal end of the coping 700 and the aperture 724. Moreover, the aperture 724 is smaller than the proximal head end 752 of the definitive screw,

which does not pass through the aperture 724 but instead sits on the rim 726. Ex. 1003, Fig. 12.

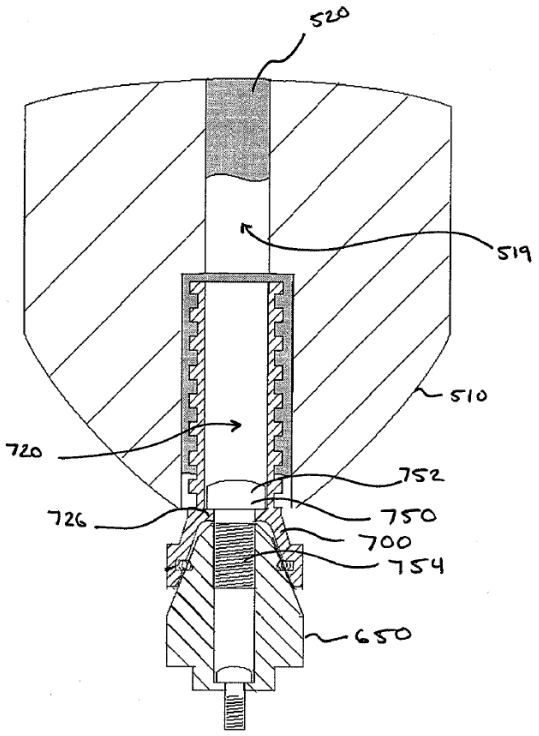

Figure 12

245. Bernhard also explains that the shaft 754 of the threaded fastener 750 is inserted through the aperture 724 of the coping 700 and that the head 752 of the fastener 750 is seated on the rim 726:

> Furthermore, a fastener 750 has been inserted into the bore 519 and into bore 720 such that the head 752 of the fastener 750 is adjacent to and seated on the rim 726 and the shaft 754 is inserted through aperture 724 and into bore 654 of the abutment 650. In some embodiments, the shaft 754 can be threaded along an exterior surface such that it engages corresponding threading within bore 654.

> Accordingly, the coping 700 and prosthesis 510 can be securely attached to the abutment 650 using the threaded screw.

Ex. 1003, [0134], Fig. 12.

246. As shown in Figure 7A of Bernhard above, the central aperture 724 is not at the proximal end of the coping 700 because of the elongate member 714. However, Bernhard discloses that, and a POSA would understand that, the elongate member 714 could be eliminated or made shorter, in which case the central aperture 724 would be at the proximal end of the coping 700. Bernhard teaches that the elongate member 714 is optional by stating that "[t]he proximal portion 712 of the coping 700 **can** include an elongate member 714 … ." (emphasis added). Ex. 1003, [0128], [0176]; [0013], [0149], [0158]. Furthermore, a POSA who set out to modify Bernhard's system in view of Poovey and Gracco to use a temporary fastener would understand that the elongate member 714 would not be needed for stability, because of the additional stability created by the temporary fastener. Moreover, it would have been obvious to make the elongate member shorter based on Poovey, which teaches that with his temporary screw, "[t]he impression coping is shorter in height." Poovey (Ex. 1005), [0084].

d. Limitation 10(d): a temporary fastener having a longitudinal axis with a length measured along the longitudinal axis and a width dimension measured perpendicular to the longitudinal axis, the temporary fastener comprising

247. As explained above, it would have been obvious to use a temporary fastener in Bernhard's system, based on the design of threaded fastener 750 but with flexible buttress threads that engage the threads in the bore 654 of the abutment 650 to temporarily connect the abutment 650 to the coping 700. This temporary fastener would have a longitudinal axis along the length of the fastener, like threaded fastener 750, as shown in Figure 12 below. Ex. 1003, [0134], Fig. 12.

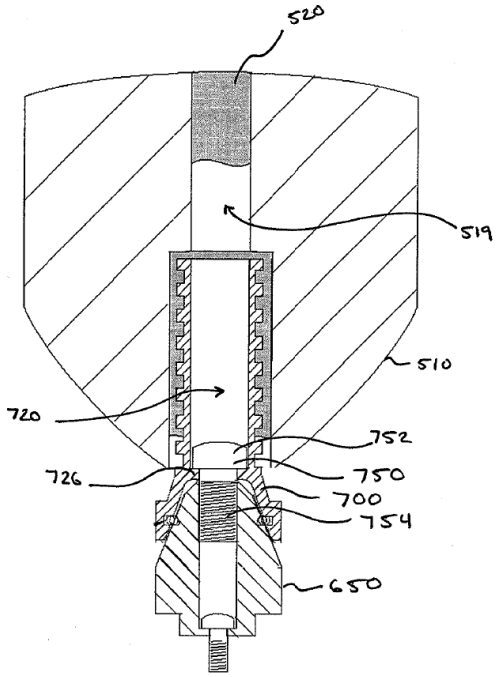

Figure 12

248. Therefore, the temporary fastener (based on the design of threaded fastener 750) would have "a length measured along the longitudinal axis and a width dimension measured perpendicular to the longitudinal axis" as recited in claim 10. Ex. 1003, [0134], Fig. 12.

e. Limitation 10(e): [the temporary fastener comprising:] a head with a proximal end having a drive tool interface sized and configured for rotating the temporary fastener to a predetermined torque, wherein the head resides external to the central aperture of the coping

249. As explained above, it would have been obvious to use a temporary fastener based on the design of threaded fastener 750 but with flexible buttress threads that engage the threads in the bore 654 of the abutment 650 to temporarily connect the abutment 650 to the coping 700. The purpose of the temporary fastener is to temporarily hold the coping 700 against the abutment 650 during pick-up processing.

250. As explained above, the temporary fastener with flexible buttress threads would be based on the design of the threaded fastener 750 and include a head like the head 752 of the threaded fastener 750, which is wider than the aperture 724 of the coping 700 so that it makes contact with the rim 726—like head 752 as shown in Figure 12 below—in order to hold the coping 700 against the abutment 650. Ex. 1003, [0134], Figs. 8, 12.

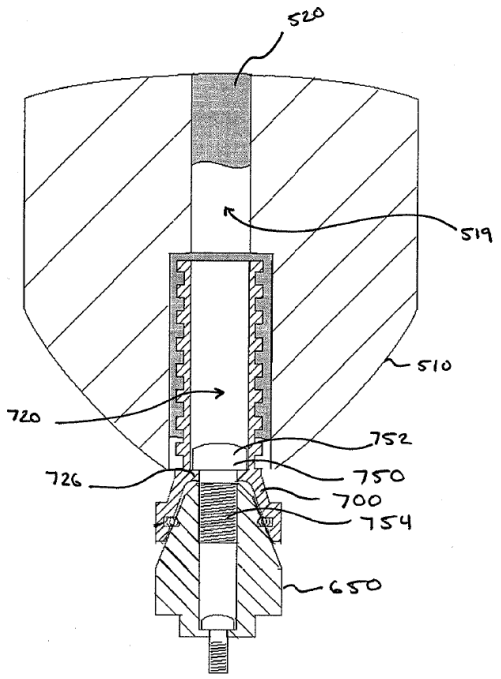

Figure 12

251. Like the head 752 of the threaded fastener 750, the head of the temporary fastener would have a proximal end with a drive tool interface sized and configured for rotating the temporary fastener to a predetermined torque. Ex. 1003, [0130], [0134], Figs. 8, 12. A POSA would understand that the temporary fastener should be threaded into the bore 654 with a torque driver up to a predetermined torque, in order to cause the head of the temporary fastener to hold the coping 700 in alignment with the abutment 650. Ex. 1003, [0134], Figs. 8, 12. Like the head 752 of the threaded fastener 750, the head of the temporary fastener would make contact with rim 726 and reside external to central aperture 724 of coping 700. Ex. 1003, [0134], Figs. 8, 12. As explained above in paragraph 246 for limitation 10(c), Bernhard discloses that the elongate member 714 is optional,

in which case the central aperture 724 would be at the proximal end of the coping 700.

f. Limitation 10(f): [the temporary fastener comprising:] a shaft coupled to or integral with the head that extends through the central aperture of the coping, the shaft comprising:

252. As explained above, the temporary fastener with flexible buttress threads would be based on the design of threaded fastener 750 and include a head like the head 752 and a threaded shaft like the shaft 754 but with asymmetric buttress threads. Ex. 1003, [0134], Figs. 8, 12. Like the shaft 754 and the head 752, the threaded shaft of the temporary fastener would be coupled to the head and extend through the central aperture 724 of the coping 700. Ex. 1003, [0134], Figs. 8, 12.[4]

g. Limitation 10(g): [the shaft comprising: …] a distal portion having an outer surface comprising shaft threading having a shaft threading contour, wherein the shaft threading contour does not essentially match the implant abutment threads contour

253. As explained above, the temporary fastener with flexible buttress threads would be based on the design of threaded fastener 750 and include a

[4] I note that in Figure 7A, the aperture at the top of coping 700 can have plug 722, however a POSA would know to insert the temporary fastener through the bore 720 and into the bore 654 before inserting the plug 722. Ex. 1003, [0130], Fig. 7A.

threaded post like the shaft 754. However, the temporary fastener would be designed to have asymmetric buttress threads in order to enable the temporary fastener to be pulled out of the abutment 650 without having to be unscrewed during pickup processing. Therefore, the distal portion of the shaft of the temporary fastener would have an outer surface with asymmetric shaft threading that has an asymmetric shaft threading contour. This asymmetric shaft threading contour would be different than the symmetric threads contour of the symmetric threads of the bore 654 of the abutment 650. Ex. 1003, [0134], Figs. 8, 12. Assuming that the limitation "does not essentially match" is not indefinite,[5] this difference in the two threading contours means that the shaft threading contour of the outer surface of the distal portion of the shaft of the temporary fastener would "not essentially match" the implant abutment threads contour.

[5] As explained above in section X.A.2 (Ground 1), the "does not essentially match" limitation is indefinite. However, for purposes of this Ground 3, I have assumed that this limitation is definite, i.e. that it is disclosed if the temporary fastener threading contour and the implant abutment threads contour are different.

h. Limitation 10(h): [the shaft comprising: …] a proximal portion with an outer surface devoid of shaft threading

254. As explained above, the temporary fastener with flexible buttress threads would be based on the design of the threaded fastener 750 and include a head like the head 752 and a threaded shaft like the shaft 754 but with asymmetric buttress threads. Like the shaft 754 of the threaded fastener 750 shown in Figure 12 below, the shaft of the temporary fastener would have a proximal portion below the rim 726 with an outer surface devoid of shaft threading, between the head and the threaded portion that is threaded into the bore 654 of the abutment 650. Ex. 1003, [0134], Fig. 12.

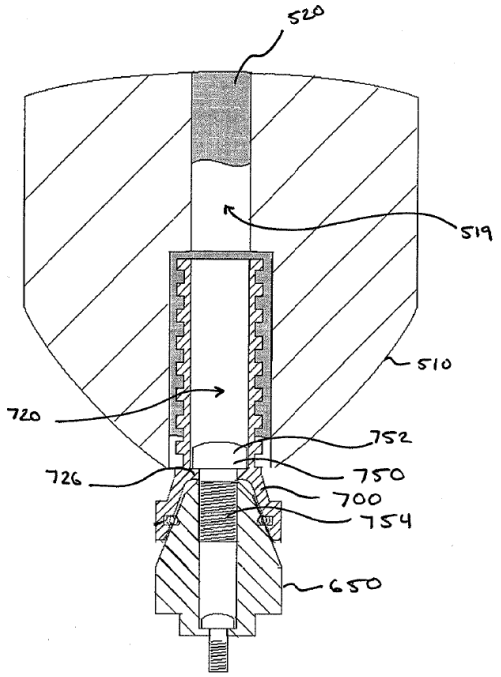

Figure 12

i. Limitation 10(i): wherein the temporary fastener is configured so that when the distal shaft portion of the shaft extends through the central aperture of the coping and engages the threads of the implant abutment at a predetermined torque, the shaft threading engages the threads of the implant abutment whereby the shaft threading cooperates with the threads of the implant abutment and is sized and configured to pull the coping into position with the implant abutment

255. As explained above, it would have been obvious to use a temporary fastener based on the design of threaded fastener 750, with a head like the head 752 and a threaded shaft like the shaft 754, but with flexible buttress threads that engage the threads in the bore 654 of the implant abutment 650 until the head contacts the rim 726, in order to provide a secure and stable connection between the coping 700 and the abutment 650. Therefore, this threaded temporary fastener would be configured so that the distal shaft portion of the shaft extends through the central aperture 724 of the coping 700 and engages the threads in the bore 654 of the abutment 650, so that the shaft threading engages the threads of the implant abutment 650, and the shaft threading cooperates with the threads of the implant abutment 650 and is sized and configured to pull the coping 700 into position with the abutment 650. Ex. 1003, [0134], Figs. 8, 12.

256. Moreover, a POSA would understand that the temporary fastener should be threaded into the bore 654 of the implant abutment 650 at a

predetermined torque using a torque driver, in order to cause the proximal head portion of the fastener to pull the coping 700 into position with the abutment 650.

j. Limitation 10(j): wherein the temporary fastener is configured so that in response to application of an axial release force above a predetermined value in a proximal direction, the coping and the temporary fastener are released as a unit from the implant abutment

257. As explained in detail above, it would have been obvious to design the temporary fastener so that the flexible buttress threads enable the fastener to be pulled out of the bore 654 of the implant abutment 650 when the prosthesis is removed, just like Bernhard's snap-fit connector and Poovey's temporary screw. Therefore, the temporary fastener would be configured so that in response to an axial release force above a predetermined value in a proximal direction, the coping 700 and the temporary fastener are released as a unit from the implant abutment 650.

258. I note that the central benefit of both Bernhard and Poovey is the ease with which the impression components can be removed by applying an axial force during pick-up processing. Bernhard teaches that "the coping 130 can be initially coupled to the abutment 120 ... and then removed from the abutment 120 by applying a separation force in a direction away from the abutment 120." Ex. 1003, [0066], [0067]. Similarly, Poovey teaches that using a screw that is "able to be pulled out without much force" allows for use of the "closed tray method, which is

easier for the dentist and more comfortable for the patient," but with the "benefit of accuracy of the traditional open-tray method in which the implant coping is unscrewed prior to impression removal." Ex. 1005, [0084].

k. Limitation 10(k): wherein the axial force above the predetermined value in the proximal direction is configured to be applied in a pick-up process after the coping is adhesively bonded to a prosthesis or in a closed tray impression process

259. As shown in Figure 9 of Bernhard below, the coping 700 is bonded to the prosthesis 510 with the bonding agent 518 when the coping 700 is temporarily connected to the implant abutment 650. Ex. 1003, [0131], Fig. 9.

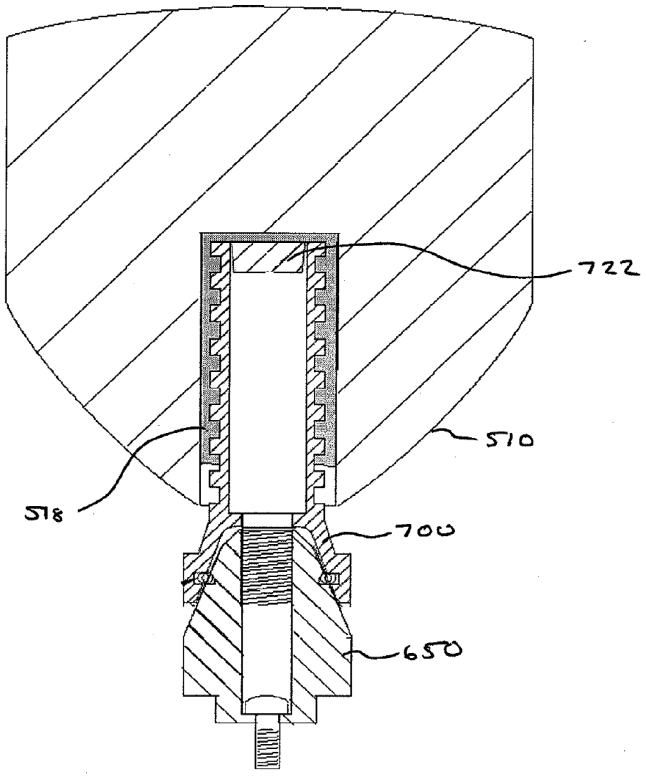

Figure 9

260. As explained above, it would have been obvious to use a temporary fastener with flexible buttress threads in Bernhard's system to temporarily connect the coping 700 to the implant abutment 650. Moreover, the temporary fastener would be designed so that the flexible buttress threads enable the fastener and the coping 700 to be pulled out of the bore 654 of the abutment 650 when the dentist removes the prosthesis 510 from the patient's jaw during a pick-up process, including a closed-tray impression process.

261. Therefore, the axial force above the predetermined value in the proximal direction would be configured to be applied in a pick-up process after the coping 700 is adhesively bonded to the prosthesis 510 or in a closed tray impression process.

3. Claim 12: The dental system of claim 10, wherein the temporary fastener comprises a polymer.

262. In my opinion, as explained below, claim 12 would have been obvious to a POSA before October 9, 2018, based on Bernhard in view of Poovey and Gracco.

263. As explained above, it would have been obvious to use a temporary fastener with flexible buttress threads in Bernhard's system. As taught by Poovey, the flexible threads of the temporary fastener would be made from or coated with a flexible material, such as silicone, which is a polymer. Ex. 1005, [0079], [0084].

4. **Claim 15: The dental system of claim 10, further comprising a definitive screw comprising threads configured to engage the implant abutment, wherein a maximal width of the distal portion of the shaft of the temporary fastener is smaller than a maximal width of the threads of the definitive screw.**

264. In my opinion, as explained below, claim 15 would have been obvious to a POSA before October 9, 2018, based on Bernhard in view of Poovey and Gracco.

265. Bernhard discloses a definitive screw (threaded fastener 750) that includes threads configured to engage the threads of the bore 654 of the implant abutment 650. Ex. 1003, [0105], [0130], [0134], Figs. 3, 12.

266. As explained above in paragraphs 221–222, it would have been obvious to use a temporary fastener in Bernhard's system, based on the design of threaded fastener 750 but with flexible buttress threads that have a smaller proximal thread angle and a smaller thread depth than the symmetric threads of threaded fastener 750.

267. Given the smaller thread depth, a maximal width of the distal portion of the shaft of the temporary fastener would be smaller than a maximal width of the threads of the definitive screw.

5. **Claim 16: The dental system of claim 10, further comprising a definitive screw comprising threads configured to engage the implant abutment, wherein a profile pattern of the threading of the temporary fastener is configured to define a first abutment contact area with the threads of the implant abutment, wherein a profile pattern of the threads of the definitive screw is configured to define a second abutment contact area with the threads of the implant abutment, and wherein the first abutment contact area is less than the second abutment contact area.**

268. In my opinion, as explained below, claim 16 would have been obvious to a POSA before October 9, 2018, based on Bernhard in view of Poovey and Gracco.

269. Bernhard discloses a definitive screw (threaded fastener 750) that includes threads configured to engage the threads of the bore 654 of the implant abutment 650. Ex. 1003, [0105], [0130], [0134], Figs. 3, 12.

270. As explained above, it would have been obvious to use a temporary fastener with flexible buttress threads in Bernhard's system. This asymmetric buttress thread would have a smaller (shallower) proximal thread angle. As a result, unlike the symmetric threads of the shaft 754 of the threaded fastener 750, the buttress threads of the temporary fastener would not match and would not fully contact and occupy the symmetric female threads of the bore 654 of the abutment 650. Therefore, the buttress threads would contact a smaller area of the symmetric threads in the bore 654 of the abutment 650 than the matching, symmetric threads of the shaft 754 of the threaded fastener 750. Ex. 1003, [0134], Fig. 12. Indeed,

Patent Owner confirmed this for the buttress thread of the temporary fastener of Figure 75 during prosecution of the ’992 patent. Patent Owner told the examiner that the asymmetric threads of the temporary fastener of Figure 75 make contact with less area of, and occupy less volume of, threads 18 of abutment 8 than the threads of definitive screw 75 of Figure 9, because of “the open space created on the proximal side of the male thread” of the temporary fastener “due to the angle lying closer to the axis”:

> The open space created on the proximal side of the male thread of temporary fastener 190 relative to the female thread(s) due to the angle lying closer to the axis represents a portion of the female abutment thread that is filled with the definitive screw when engaged as shown in FIG. 9. As a result of the open space from the different thread profile of the temporary screw compared to the definitive screw in FIG. 9, the temporary screw threading of FIG. 75 has less surface area contact with the female implant abutment threading, has less material volume within the engagement depth with the implant abutment and can have a smaller radial extent or width than the definitive screw.

Ex. 1015 at 298.

271. Therefore, the profile pattern of the threading of the temporary fastener would be configured to define a first abutment contact area with the threads of the implant abutment 650. Moreover, a profile pattern of the threads of the definitive screw (threaded fastener 750) would be configured to define a

second abutment contact area with the threads of the implant abutment 650. Finally, the first abutment contact area would be less than the second abutment contact area. Ex. 1003, [0134], Fig. 12.

D. Ground 4: Claims 1–9, 11, 13 and 14 Would Have Been Obvious Based on Bernhard In View of Poovey, Gracco and Derey

272. In my opinion, as explained below, claims 1–9, 11, 13 and 14 would have been obvious to a POSA before the earliest possible effective filing date of October 9, 2018, based on Bernhard in view of Poovey, Gracco and Derey.

273. In my analysis below, I cite exemplary portions of Bernhard, Poovey, Gracco and Derey that disclose or are relevant to each claim element. However, my citations are not exhaustive.

1. Motivation to Modify Bernhard In View of Poovey, Gracco and Derey

274. As I explain above in Section X.C.1, it would have been obvious to modify Bernhard's system in view of Poovey and Gracco to use a temporary fastener based on the design of threaded fastener 750 but with flexible buttress threads.

275. In my opinion, claims 1–9, 11, 13 and 14 would have been obvious in further view of Derey.

276. Independent claims 1, 6 and 8 require the "distal shaft portion" of the temporary fastener to "not engage the implant abutment threads continuously

between a most distal position of the distal shaft portion and a proximal end of the abutment threads." Ex. 1001, 26:9 –13, 27:6 – 10, 27:46 – 50. Dependent claims 2–5, 7 and 9 depend from claim 1 but do not modify the above limitation.

277. Claim 11 requires the "shaft threading" of the temporary fastener to "not have a continuous threading contour along its path around the longitudinal axis." Ex. 1001, 28:42–44.

278. Claim 7 requires the distal shaft portion of the temporary fastener to have an open space that encompasses a portion of the longitudinal axis. Ex. 1001, 27:11–14. Claim 9 requires the distal shaft portion of the temporary fastener to be hollow. Ex. 1001, 27:61–63.

279. Claim 13 requires the temporary fastener to include "a PEEK material." Ex. 1001, 28:47–48.

280. Claim 14 requires the distal shaft portion of the temporary fastener to deform when the temporary fastener and the coping are pulled out of the abutment. Ex. 1001, 28:49–54.

281. Derey teaches that a temporary fastener made of a polymer with two deflecting legs that grip the internal threads in the bore is a stable and secure connector that can be pulled out when the dentist removes the impression. Derey (Ex. 1008) at 4, 9–10, Figs. 5, 6.

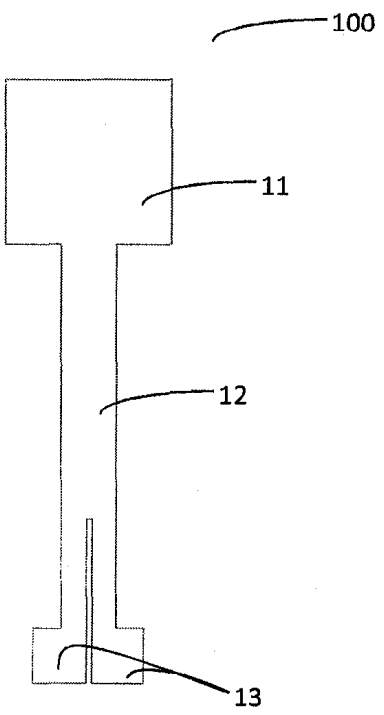

Fig. 5

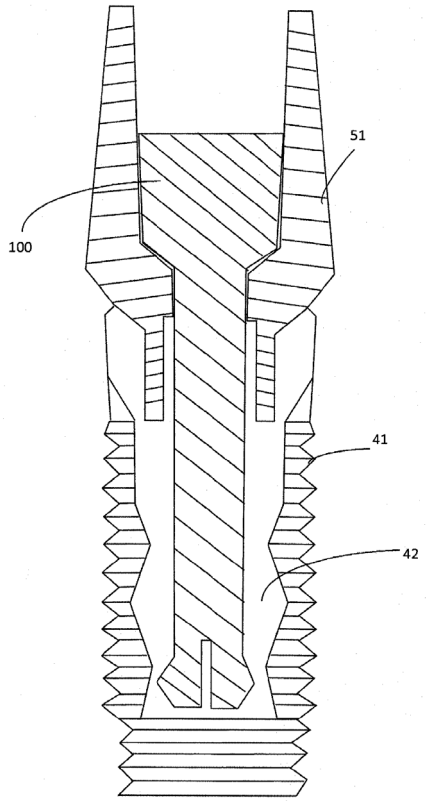

Fig. 6

282. Based on Derey, a POSA would have been motivated to design the threaded temporary fastener to have a slot in the distal shaft portion to create a split-post structure with deflecting legs, because this would make it easier to pull the temporary fastener out of the abutment while still ensuring that the temporary connection is stable and secure. As taught by Derey, the slot that creates the split-post structure would allow the portion of the temporary fastener that is threaded into the threaded bore 654 of the abutment 650 to deflect inwardly, which would facilitate removing the fastener from the abutment when the prosthesis is removed from the jaw. Ex. 1008 at 4, 9–10, Figs. 5, 6.

283. A POSA would have had a reasonable expectation of success designing such a split-post temporary fastener with deflecting legs because this is a predictable technology and this would have been well within the level of ordinary skill. In particular, a POSA would have understood how to design the length and width of the slot and the deflecting legs to achieve the objectives of maintaining a secure and stable temporary connection while enabling the temporary fastener to be pulled out without needing to be unscrewed.

284. As explained below, this split-post temporary fastener with flexible buttress threads would have all the features of claims 1–9, 11, 13 and 14.

2. Claim 1

285. In my opinion, as explained below, claim 1 would have been obvious to a POSA before October 9, 2018, based on Bernhard in view of Poovey, Gracco and Derey.

286. As explained above, it would have been obvious to modify Bernhard's system in view of Poovey, Gracco and Derey to use a temporary fastener based on the design of threaded fastener 750 but with a split-post structure and flexible buttress threads. As explained below, this modified system would have all the limitations of claim 1.

a. Limitation 1(a): A dental system comprising

287. The preamble of claim 1 recites "[a] dental system comprising" and then the body of the claim recites the four components of the dental system: "an implant abutment," "a definitive screw," "a coping," and "a temporary fastener." Ex. 1001, 25:45–26:24.

288. As shown in Figure 12 below, Bernhard discloses a dental system comprising three of these four components: an implant abutment 650, a coping 700, and a definitive screw (threaded fastener 750) with a threaded shaft 754 that engages the threads in the bore 654 of the abutment 650 to permanently connect the abutment 650 to the coping 700. Ex. 1003, [0105], [0130], [0134], Figs. 3, 12.

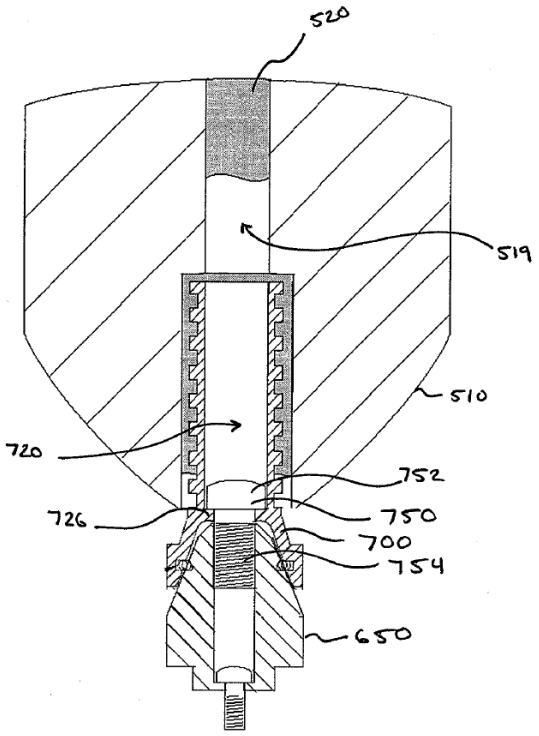

Figure 12

289. With respect to the fourth component of the dental system—the "temporary fastener"—Bernhard discloses, as shown in Figure 8, that the coping 700 is temporarily connected to the abutment 650 by a resilient spring 708 that engages an annular slot 652 to create a snap-fit connection. Ex. 1003, [0124], [0126], [0130], Fig. 8.

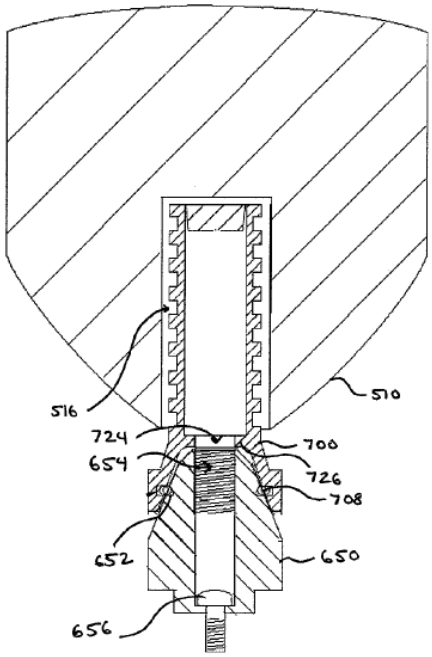

Figure 8

290. As explained above in Section X.D.1, it would have been obvious to use a temporary fastener in Bernhard's system, based on the design of the threaded fastener 750, but with a split-post structure and flexible buttress threads that engage the threads in the bore 654 of the abutment 650 to temporarily connect the coping 700 to the abutment 650.

b. Limitation 1(b): a coping having a proximal end with an aperture

291. As shown in Figures 7A and 8 of Bernhard below, the coping 700 includes an aperture at its proximal end which leads to the aperture 724 that leads to the bore 654 of the implant abutment 650. Ex. 1003, [0129], Figs. 7A, 8.

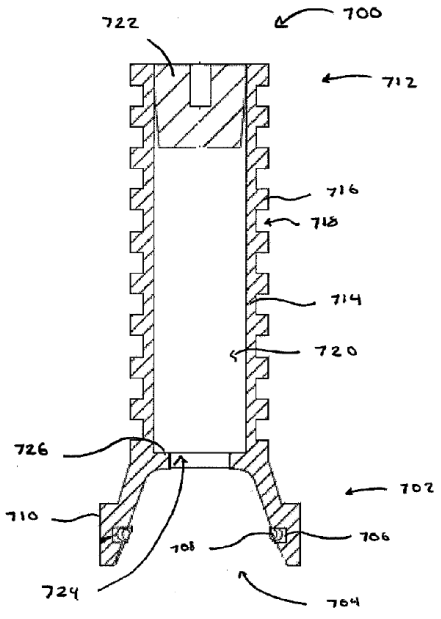

Figure 7A

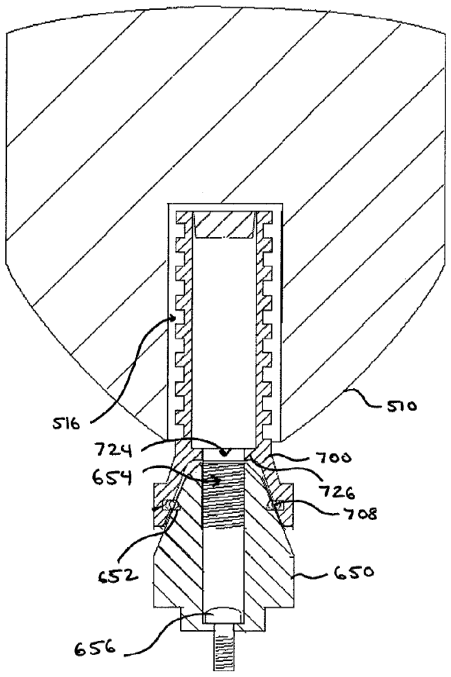

Figure 8

292. As shown in Figure 12 below, the aperture at the proximal end of the coping 700 and the aperture 724 in coping 700 are both larger than the shaft 754 of the definitive screw (the threaded fastener 750), which passes through the aperture at the proximal end of the coping 700 and the aperture 724. Therefore, the coping 700 has a proximal end with an aperture sized to allow the definitive screw shaft 754 to pass through.

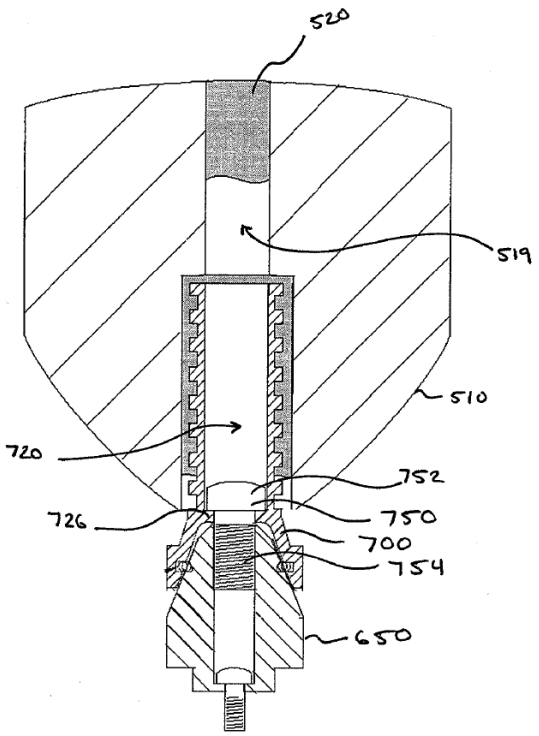

Figure 12

293. Bernhard also explains that the shaft 754 of the threaded fastener 750 is inserted through the aperture 724 of the coping 700:

> Furthermore, a fastener 750 has been inserted into the bore 519 and into bore 720 such that the head 752 of the fastener 750 is adjacent to and seated on the rim 726 and the shaft 754 is inserted through aperture 724 and into bore 654 of the abutment 650.

Ex. 1003, [0134], Fig. 12.

294. As shown in Figure 7A of Bernhard above, the aperture 724 is not at the proximal end of the coping 700 because of the elongate member 714. However, Bernhard discloses that, and a POSA would understand that, the elongate

member 714 could be eliminated or made shorter, in which case the aperture 724 would be at the proximal end of the coping 700. Bernhard teaches that the elongate member 714 is optional by stating that "[t]he proximal portion 712 of the coping 700 **can** include an elongate member 714 … ." (emphasis added). Ex. 1003, [0128], [0176]; [0013], [0149], [0158]. Furthermore, a POSA who set out to modify Bernhard's system in view of Poovey, Gracco and Derey to use a temporary fastener would understand that the elongate member 714 would not be needed for stability, because of the additional stability created by the temporary fastener. Moreover, it would have been obvious to make the elongate member shorter based on Poovey, which teaches that with his temporary screw, "[t]he impression coping is shorter in height." Poovey (Ex. 1005), [0084].

c. Limitation 1(c): an implant abutment having threads

295. Bernhard discloses an implant abutment having female threads. As shown in Figure 8 above, the bore 654 of the abutment 650 has female threads. Ex. 1003, [0130], Fig. 8.

d. Limitation 1(d): a definitive screw having a proximal head end having a tool interface and a distal post portion having threads configured for securing the coping to the threads of the implant abutment, wherein the distal post portion having threads is sized to extend through the aperture of the coping; and

296. Bernhard discloses a definitive screw, namely threaded fastener 750. As shown in Figure 12 of Bernhard above, the definitive screw (threaded fastener

750) has a proximal head end (head 752) with a tool interface, so that it can be screwed into the threads of the bore 654 of the abutment 650. Ex. 1003, [0134], Fig. 12.

297. The threaded fastener 750 also has a shaft 754 with a distal post portion that has threads that are configured to secure the coping 700 to the threads in the bore 654 of the abutment 650.[6] The distal post portion of the shaft 754 of threaded fastener 750 is sized to extend through the aperture at the proximal end of the coping 700 and the aperture 724 of the coping 700. Ex. 1003, [0134], Figs. 8, 12.

298. Bernhard also explains that the threads of the shaft 754 of the threaded fastener 750 engage with the threads in the bore 654 of the abutment 650:

> Furthermore, a fastener 750 has been inserted into the bore 519 and into bore 720 such that the head 752 of the fastener 750 is adjacent to

---

[6] As explained above in section X.B.3 (Ground 2), this limitation, which requires the definitive screw threads to secure the coping to the threads of the implant abutment, is not supported by the '781 patent specification. However, for purposes of this Ground 4, I have assumed that this limitation is supported, i.e. that it is disclosed if the definitive screw threads secure the coping to the implant abutment, even though the definitive screw threads do not secure the coping to the threads of the abutment.

> and seated on the rim 726 and the shaft 754 is inserted through aperture 724 and into bore 654 of the abutment 650. In some embodiments, the shaft 754 can be threaded along an exterior surface such that it engages corresponding threading within bore 654. Accordingly, the coping 700 and prosthesis 510 can be securely attached to the abutment 650 using the threaded screw.

Ex. 1003, [0134], Fig. 12.

e. Limitation 1(e): a temporary fastener having an axis with a length measured along the axis and a lateral dimension providing different widths along the axis measured perpendicular to the axis, the temporary fastener comprising

299. As explained above, it would have been obvious use a temporary fastener based on the design of the threaded fastener 750 but with a split-post structure and flexible buttress threads that engage the threads in the bore 654 of the abutment 650 to temporarily connect the coping 700 to the abutment 650. This temporary fastener would have a longitudinal axis along the length of the fastener, like the threaded fastener 750, as shown in Figure 12 below. Ex. 1003, [0134], Figs. 8, 12.

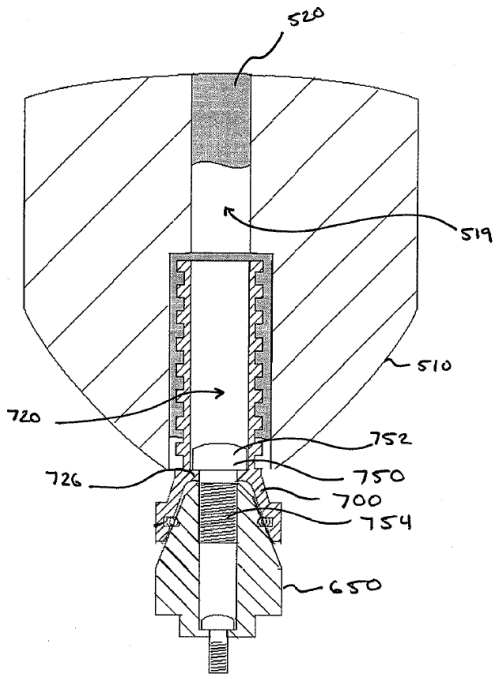

Figure 12

300. Moreover, because of the asymmetric buttress thread, the temporary fastener would have a maximum diameter (at the thread peaks) that is greater than the minimum diameter (at the thread troughs). Furthermore, the head of the temporary fastener would have a maximum diameter that is greater than the width of the threads.

301. Therefore, the temporary fastener (based on the design of threaded fastener 750) would have "a length measured along the axis and a lateral dimension providing different widths along the axis measured perpendicular to the axis" as recited in claim 1. Ex. 1003, [0134], Fig. 12.

f. Limitation 1(f): [the temporary fastener comprising:] a proximal portion with a width larger than the coping aperture

302. As explained above, the temporary fastener with a split-post structure and flexible buttress threads would be based on the design of threaded fastener 750 and include a proximal portion (a head) like head 752 of threaded fastener 750. Like head 752 shown in Figure 12 above, the head of the temporary fastener would be wider than the aperture 724 of coping 700, so that the head makes contact with the rim 726 to hold the coping 700 against the implant abutment 650. Ex. 1003, [0134], Figs. 8, 12. As explained above in paragraph 294 for limitation 1(b), Bernhard discloses that the elongate member 714 is optional, in which case the aperture 724 would be at the proximal end of the coping 700.

g. Limitation 1(g): [the temporary fastener comprising:] a shaft comprising a distal shaft portion sized and configured for rotary engagement with the implant abutment threads

303. As explained above, the temporary fastener with a split-post structure and flexible buttress threads would be based on the design of threaded fastener 750 and include a threaded post like the shaft 754. Like the shaft 754 shown in Figure 12 below, the shaft of the temporary fastener would be threaded into the bore 654 of the implant abutment 650 in order to hold the coping 700 against the abutment 650. Therefore, the temporary fastener shaft would have a distal shaft portion that

is sized and configured for rotary engagement with the threads in the bore 654 of the implant abutment 650. Ex. 1003, [0134], Figs. 8, 12.

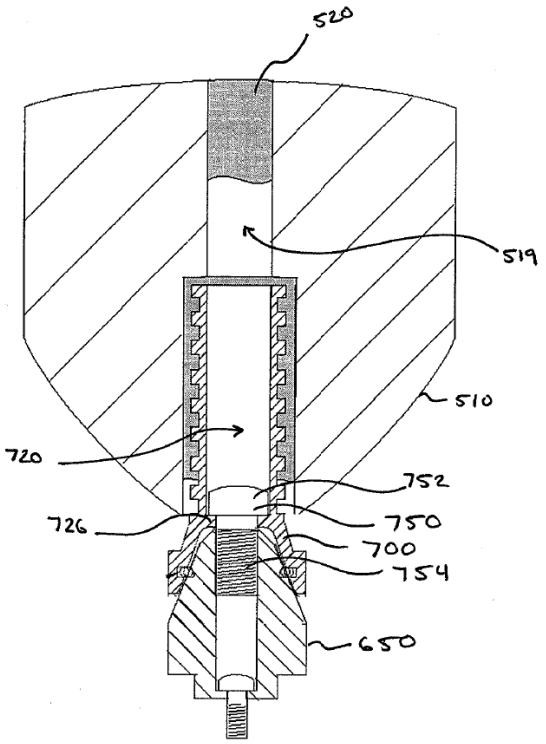

Figure 12

304. I note that in Figure 7A, reproduced below, the aperture at the top of coping 700 can have plug 722, however a POSA would know to insert the temporary fastener through the bore 720 and into the bore 654 before inserting the plug 722. Ex. 1003, [0130], Fig. 7A.

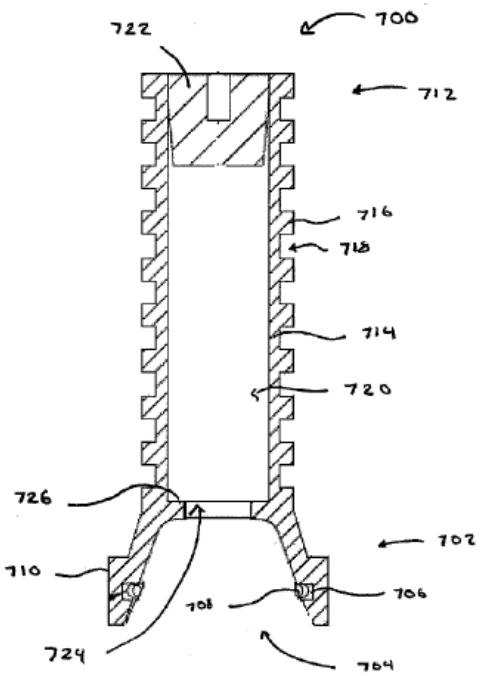

Figure 7A

h. Limitation 1(h): wherein the shaft of the temporary fastener extends through the aperture of the coping and the distal shaft portion engages the implant abutment threads with an engagement depth at a predetermined torque and is configured to cause the proximal portion of the temporary fastener to hold the coping into alignment with the implant abutment prior to attachment of the definitive screw

305. As explained above, the temporary fastener would be based on the design of fastener 750 and include a head like head 752 and a threaded shaft like shaft 754, but with a split-post structure and asymmetric buttress threads that would be threaded into bore 654 of abutment 650 to hold coping 700 against abutment 650. Ex. 1003, [0134], Figs. 8, 12.

306. Like shaft 754 of threaded fastener 750 shown in Figure 12 below, the shaft of the temporary fastener would extend through the aperture at the proximal end of the coping 700 and the aperture 724 of coping 700. Like shaft 754, the distal shaft portion of the temporary fastener would engage the threads in bore 654 of the implant abutment 650 with an engagement depth at a predetermined torque. A POSA would understand that the temporary fastener should be threaded into the bore 654 with a torque driver up to a predetermined torque, in order to cause the head of the temporary fastener to hold the coping 700 in alignment with the abutment 650, like head 752 of threaded fastener 750, as shown in Figure 12 below. Ex. 1003, [0134], Figs. 8, 12.

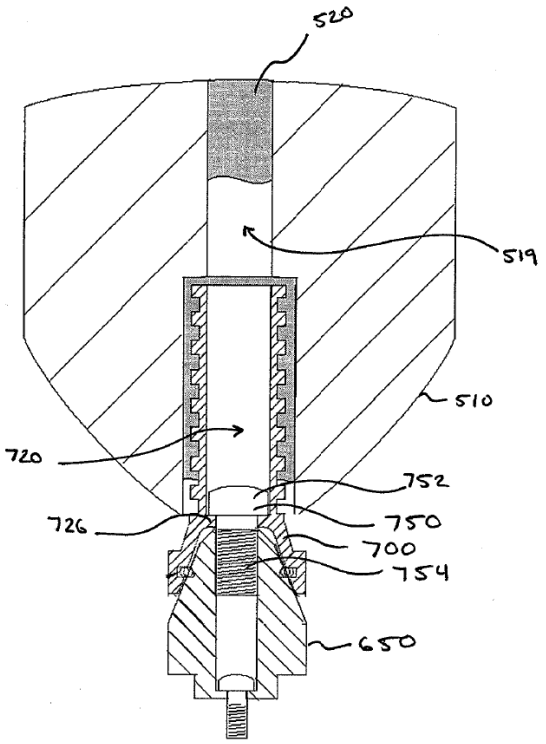

Figure 12

307. Therefore, the temporary fastener shaft would extend through the aperture at the proximal end of the coping 700 and the aperture 724 of the coping 700. Moreover, the distal shaft portion would engage with the threads of the bore 654 of the abutment 650 with an engagement depth at a predetermined torque. Moreover, the distal shaft portion would be configured to cause the proximal portion of the temporary fastener to hold the coping 700 into alignment with the implant abutment 650 prior to attachment of the definitive screw (the threaded fastener 750).

i. Limitation 1(i): wherein the temporary fastener is configured to release at least a portion of the temporary fastener and the coping from the implant abutment as a unit when an axial release force is applied in a proximal direction to the temporary fastener

308. As explained above, it would have been obvious to design the temporary fastener so that the split-post structure and flexible buttress threads enable the fastener to be pulled out of the bore 654 of the abutment 650 when the prosthesis is removed, just like Bernhard's snap-fit connector and Poovey's temporary screw. Therefore, the temporary fastener would be configured to release the temporary fastener and the coping 700 as a unit from the bore 654 of the abutment 650 when an axial release force is applied in a proximal direction to the temporary fastener.

309. Once again, I note that the central benefit of both Bernhard and Poovey is the ease with which the impression components can be removed by applying an axial force during pick-up processing. Bernhard teaches that "the coping 130 can be initially coupled to the abutment 120 … and then removed from the abutment 120 by applying a separation force in a direction away from the abutment 120." Ex. 1003, [0066]. Similarly, Poovey teaches that using a screw that is "able to be pulled out without much force" allows for use of the "closed tray method, which is easier for the dentist and more comfortable for the patient," but with the "benefit of accuracy of the traditional open-tray method in which the implant coping is unscrewed prior to impression removal." Ex. 1005, [0084].

j. Limitation 1(j): wherein the distal shaft portion is sized and configured so that it does not engage the implant abutment threads continuously between a most distal position of the distal shaft portion and a proximal end of the implant abutment threads

310. As explained above, the temporary fastener would be based on the design of threaded fastener 750 and include a threaded shaft like shaft 754 but with a split-post structure and asymmetric buttress threads that would be threaded into the bore 654 of the abutment 650 to hold coping 700 against abutment 650. Ex. 1003, [0134], Figs. 8, 12.

311. The gap on either side of the threaded shaft of the temporary fastener created by the slot of the split-post structure would interrupt the helical thread

pattern so that the thread pattern is not continuous. Therefore, the distal shaft portion would be sized and configured so that it does not engage the threads of the bore 654 of the implant abutment 650 continuously between a most distal position of the distal shaft portion and a proximal end of the threads of the bore 654 of the abutment 650.

k. Limitation 1(k): wherein the distal shaft portion of the temporary fastener comprises threading which is sized and configured to make contact with the implant abutment threads over a first threading contact area to hold the coping against the implant abutment, wherein the distal post portion of the definitive screw is sized and configured to make contact with the implant abutment threads over a second threading contact area to hold the coping against the implant abutment, and wherein the first threading contact area is less than the second threading contact area

312. As explained above, the temporary fastener would have a split-post structure and flexible buttress threads with a smaller (shallower) proximal thread angle. As a result, unlike the symmetric threads of the shaft 754 of the threaded fastener 750, the buttress threads of the temporary fastener would not match and would not fully contact and occupy the symmetric threads of the bore 654 of the implant abutment 650. Therefore, the buttress threads would contact a smaller area of the symmetric threads in the bore 654 of the abutment 650 than the matching, symmetric threads of the shaft 754 of the threaded fastener 750. Ex. 1003, [0134], Fig. 12. Indeed, Patent Owner confirmed this for the buttress thread of the

temporary fastener of Figure 75 during prosecution of the ’992 patent. Patent Owner told the examiner that the asymmetric threads of the temporary fastener of Figure 75 make contact with less area of, and occupy less volume of, threads 18 of abutment 8 than the threads of definitive screw 75 of Figure 9 because of “the open space created on the proximal side of the male thread” of the temporary fastener “due to the angle lying closer to the axis”:

> The open space created on the proximal side of the male thread of temporary fastener 190 relative to the female thread(s) due to the angle lying closer to the axis represents a portion of the female abutment thread that is filled with the definitive screw when engaged as shown in FIG. 9. As a result of the open space from the different thread profile of the temporary screw compared to the definitive screw in FIG. 9, the temporary screw threading of FIG. 75 has less surface area contact with the female implant abutment threading, has less material volume within the engagement depth with the implant abutment and can have a smaller radial extent or width than the definitive screw.

Ex. 1015 at 298.

313. Therefore, the distal shaft portion of the temporary fastener would have threading that is sized and configured to make contact with the threads of the bore 654 of the implant abutment 650 over a first threading contact area to hold the coping 700 against the implant abutment 650. Moreover, the distal post portion of the definitive screw (threaded fastener 750) is sized and configured to make

contact with the threads of the bore 654 of the implant abutment 650 over a second threading contact area to hold the coping 700 against the implant abutment 650. Finally, the first threading contact area would be less than the second threading contact area. Ex. 1003, [0134], Fig. 12.

3. Claim 2: The dental system of claim 1, wherein the distal shaft portion of the temporary fastener comprises asymmetric threading

314. In my opinion, as explained below, claim 2 would have been obvious to a POSA before October 9, 2018, based on Bernhard in view of Poovey, Gracco and Derey.

315. As explained above, it would have been obvious to modify Bernhard's system in view of Poovey, Gracco and Derey to use a temporary fastener based on the design of threaded fastener 750 but with a split-post structure and flexible buttress threads. As further explained above, the buttress thread on the distal shaft portion of the temporary fastener would be asymmetric because the proximal thread angle would be smaller than the distal thread angle, like thread B in Figure 1 of Gracco below. Ex. 1006, Fig. 1 (B).

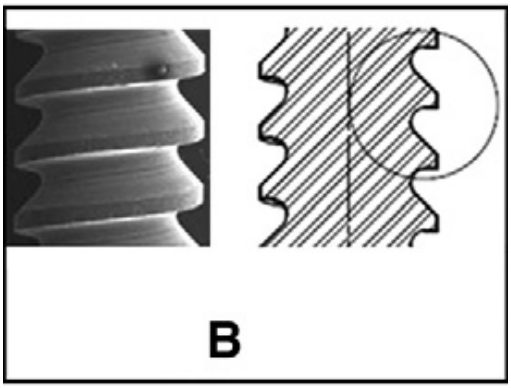

4. Claim 3: The dental system of claim 1, wherein the axial release force in the proximal direction is applied through a pick-up process in which the coping is bonded and/or adhered to a dental element

316. In my opinion, as explained below, claim 3 would have been obvious to a POSA before October 9, 2018, based on Bernhard in view of Poovey, Gracco and Derey.

317. As shown in Figure 9 of Bernhard below, the coping 700 is bonded to the prosthesis 510 with the bonding agent 518 when the coping 700 is temporarily connected to the implant abutment 650. Ex. 1003, [0131], Fig. 9.

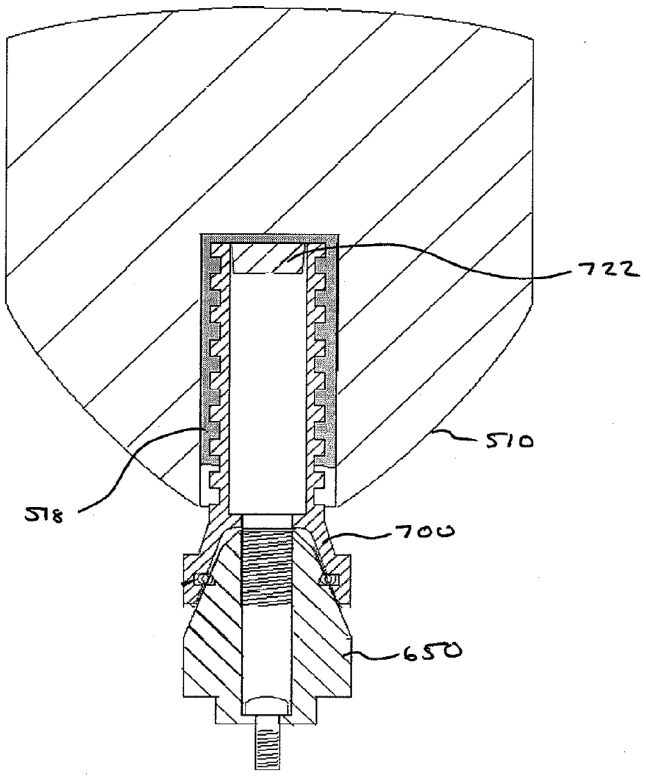

Figure 9

318. As explained above, it would have been obvious to use a split-post temporary fastener with flexible buttress threads in Bernhard's system to temporarily connect the coping 700 to the implant abutment 650. As further explained above, the temporary fastener would be designed so that the split-post structure and the flexible buttress threads enable the temporary fastener and the coping 700 to be pulled out of the bore 654 of the abutment 650 when the dentist removes the prosthesis 510 from the patient's jaw during a pick-up process.

319. Therefore, the axial release force in the proximal direction would be applied through a pick-up process in which the coping 700 is bonded and/or adhered to a dental element, i.e. the prosthesis 510.

5. Claim 4: The dental system of claim 1, wherein the threads of the distal post portion of the definitive screw comprise a continuous form

320. In my opinion, as explained below, claim 4 would have been obvious to a POSA before October 9, 2018, based on Bernhard in view of Poovey, Gracco and Derey.

321. As shown in Figure 12 of Bernhard below, the threads of the shaft 754 on the distal post portion of the definitive screw (threaded fastener 750) are continuous, and therefore include a continuous form. Ex. 1003, Fig. 12.

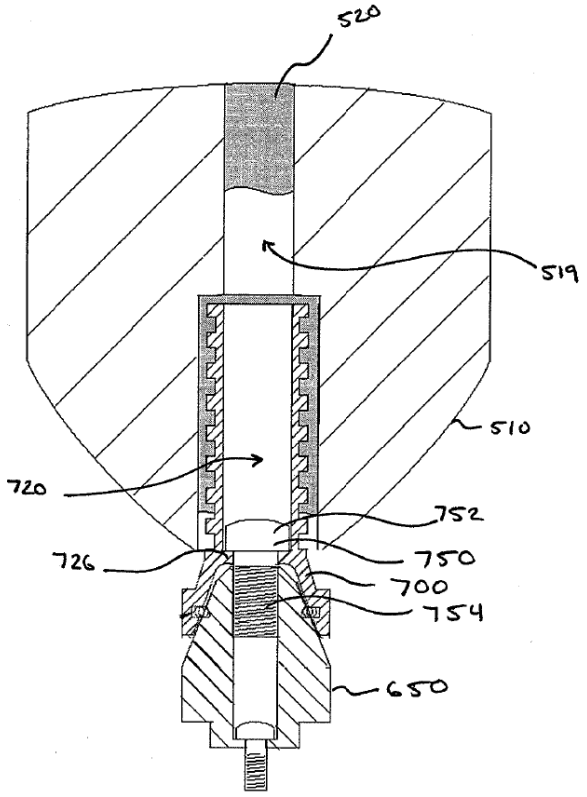

Figure 12

6. Claim 5: The dental system claim 1, wherein the distal shaft portion of the temporary fastener comprises an outer surface which is sized and configured to deform in response to the axial release force in the proximal direction whereby the at least a portion of the temporary fastener and the coping are released together as a unit.

322. In my opinion, as explained below, claim 5 would have been obvious to a POSA before October 9, 2018, based on Bernhard in view of Poovey, Gracco and Derey.

323. As explained above, it would have been obvious to use a split-post temporary fastener with flexible buttress threads in Bernhard's system.

324. As taught by Poovey, the flexible threads of the temporary fastener would be made from or coated with a flexible or pliable material, such as silicone, so that the threads deform when the temporary fastener and the coping 700 are pulled out of the implant abutment 650. Ex. 1005, [0079], [0084].

325. Therefore, the distal shaft portion of the temporary fastener would include an outer surface which is sized and configured to deform in response to the axial release force in the proximal direction, and at least a portion of the temporary fastener and the coping 700 would be released together as the unit.

7. Claim 6

326. In my opinion, as explained below, claim 6 would have been obvious to a POSA before October 9, 2018, based on Bernhard in view of Poovey, Gracco and Derey.

327. As explained above, it would have been obvious to modify Bernhard's system in view of Poovey, Gracco and Derey to use a temporary fastener based on the design of threaded fastener 750 but with a split-post structure and flexible buttress threads. As explained below, this modified system would have all the limitations of claim 6.

a. Limitation 6(a): A dental system comprising:

328. Limitation 6(a) is the same as limitation 1(a). Therefore, the analysis above in section X.D.2.a for limitation 1(a) applies to limitation 6(a).

b. Limitation 6(b): a coping having a proximal end with an aperture

329. Limitation 6(b) is the same as limitation 1(b). Therefore, the analysis above in section X.D.2.b for limitation 1(b) applies to limitation 6(b).

c. Limitation 6(c): an implant abutment having threads

330. Limitation 6(c) is the same as limitation 1(c). Therefore, the analysis above in section X.D.2.c for limitation 1(c) applies to limitation 6(c).

d. Limitation 6(d): a definitive screw having a proximal head end having a tool interface and a distal post portion having threads for securing the coping to the threads of the implant abutment after processing, wherein the distal post portion having threads is sized to extend through the aperture of the coping

331. Limitation 6(d) is the same as limitation 1(d), except for (i) the removal of "configured" before "for securing" and (ii) the addition of "after processing" after "abutment." Therefore, the analysis above in section X.D.2.d for

limitation 1(d) applies to limitation 6(d) with the following addition: In Bernhard's system, the definitive screw (threaded fastener 750) secures the coping 700 to the implant abutment 650 after pick-up processing. Ex. 1003, [0134], Fig. 12

e. Limitation 6(e): a temporary fastener having an axis with a length measured along the axis and a lateral dimension providing different widths along the axis measured perpendicular to the axis, the temporary fastener comprising:

332. Limitation 6(e) is the same as limitation 1(e). Therefore, the analysis above in section X.D.2.e for limitation 1(e) applies to limitation 6(e).

f. Limitation 6(f): [the temporary fastener comprising] a proximal portion with a width larger than the coping aperture

333. Limitation 6(f) is the same as limitation 1(f). Therefore, the analysis above in section X.D.2.f for limitation 1(f) applies to limitation 6(f).

g. Limitation 6(g): [the temporary fastener comprising] a shaft comprising a distal shaft portion sized and configured for rotary engagement with the implant abutment threads

334. Limitation 6(g) is the same as limitation 1(g). Therefore, the analysis above in section X.D.2.g for limitation 1(g) applies to limitation 6(g).

h. Limitation 6(h): wherein the shaft of the temporary fastener is sized and configured to extend through the aperture of the coping and the distal shaft portion to engage the implant abutment threads with an engagement depth at a predetermined torque and is configured to cause the proximal portion of the temporary fastener to hold the coping into alignment with the implant abutment

335. Limitation 6(h) is the same as limitation 1(h), except for (i) the replacement of "extends" with "is sized and configured to extend," (ii) the replacement of "engages" with "to engage" after "portion," and (iii) the removal of "prior to attachment of the definitive screw" after "abutment." Therefore, the analysis above in section X.D.2.h for limitation 1(h) applies to limitation 6(h).

i. Limitation 6(i): wherein the temporary fastener is configured to release at least a portion of the temporary fastener and the coping from the implant abutment as a unit in response to an axial release force that is applied only in a proximal direction to the temporary fastener whereby the axial release force is applied without rotation of the temporary fastener

336. Limitation 6(i) is the same as limitation 1(i) except for (i) the replacement of "when" with "in response to" after "unit," (ii) the addition of "that" before "is applied," (iii) the addition of "only" after "is applied," and (iv) the addition of "whereby the axial release force is applied without rotation of the temporary fastener." Therefore, the analysis above in section X.D.2.i for limitation 1(i) applies to limitation 6(i) with the following addition: As explained above, the

temporary fastener would be designed so that the split-post structure and the flexible buttress threads enable the temporary fastener to be pulled out of the bore 654 of the implant abutment 650 without being unscrewed, i.e. without rotating the temporary fastener. Poovey (Ex. 1005), [0079], [0084].

j. Limitation 6(j): wherein the distal shaft portion is sized and configured so that it does not engage the implant abutment threads continuously between a most distal position of the distal shaft portion and a proximal end of the implant abutment threads

337. Limitation 6(j) is the same as limitation 1(j). Therefore, the analysis above in section X.D.2.j for limitation 1(j) applies to limitation 6(j).

8. Claim 7: The dental system of claim 1, wherein the distal shaft portion of the temporary fastener comprises an open space, and wherein a portion of the axis is located within the open space

338. In my opinion, as explained below, claim 7 would have been obvious to a POSA before October 9, 2018, based on Bernhard in view of Poovey, Gracco and Derey.

339. As explained above, it would have been obvious to use a split-post temporary fastener with flexible buttress threads in Bernhard's system.

340. The distal shaft portion of this temporary fastener would include an open space inside the slot between the two deflecting legs. This open space would extend from one side of the shaft to the other side of the shaft, and therefore would encompass a portion of the longitudinal axis of the temporary fastener.

9. Claim 8

341. In my opinion, as explained below, claim 8 would have been obvious to a POSA before October 9, 2018, based on Bernhard in view of Poovey, Gracco and Derey.

342. As explained above, it would have been obvious to modify Bernhard's system in view of Poovey, Gracco and Derey to use a temporary fastener based on the design of threaded fastener 750 but with a split-post structure and flexible buttress threads. As explained below, this modified system would have all the limitations of claim 8.

a. Limitation 8(a): A dental system comprising:

343. Limitation 8(a) is the same as limitation 1(a). Therefore, the analysis above in section X.D.2.a for limitation 1(a) applies to limitation 8(a).

b. Limitation 8(b): a coping having a proximal end with an aperture

344. Limitation 8(b) is the same as limitation 1(b). Therefore, the analysis above in section X.D.2.b for limitation 1(b) applies to limitation 8(b).

c. Limitation 8(c): an implant abutment having threads

345. Limitation 8(c) is the same as limitation 1(c). Therefore, the analysis above in section X.D.2.c for limitation 1(c) applies to limitation 8(c).

d. Limitation 8(d): a definitive screw having a proximal head end having a tool interface and a distal post portion having threads for securing the coping to the threads of the implant abutment, wherein the distal post portion having threads is sized to extend through the aperture of the coping

346. Limitation 8(d) is the same as limitation 1(d) except for the removal of "configured" before "for securing." Therefore, the analysis above in section X.D.2.d for limitation 1(d) applies to limitation 8(d).

e. Limitation 8(e): a temporary fastener having an axis with a length measured along the axis and a lateral dimension providing different widths along the axis measured perpendicular to the axis, the temporary fastener comprising:

347. Limitation 8(e) is the same as limitation 1(e). Therefore, the analysis above in section X.D.2.e for limitation 1(e) applies to limitation 8(e).

f. Limitation 8(f): [the temporary fastener comprising] a proximal portion with a width larger than the coping aperture

348. Limitation 8(f) is the same as limitation 1(f). Therefore, the analysis above in section X.D.2.f for limitation 1(f) applies to limitation 8(f).

g. Limitation 8(g): [the temporary fastener comprising] a shaft comprising a distal shaft portion sized and configured for rotary engagement with the implant abutment threads prior to attachment of the definitive screw

349. Limitation 8(g) is the same as limitation 1(g) except for the addition of "prior to attachment of the definitive screw" after "threads." Therefore, the

analysis above in section X.D.2.g for limitation 1(g) applies to limitation 8(g) with the following addition: As explained above, the threaded shaft of the temporary fastener would be configured for rotary engagement with the threads of the bore 654 of the implant abutment 650, in order to temporarily connect the coping 700 to the implant abutment 650, prior to the attachment of the definitive screw (threaded fastener 750) to the implant abutment 650. Ex. 1003, [134], Fig. 12.

h. Limitation 8(h): wherein the shaft of the temporary fastener extends through the aperture of the coping and the distal shaft portion engages the implant abutment threads with an engagement depth at a predetermined torque and is configured to cause the proximal portion of the temporary fastener to hold the coping into alignment with the implant abutment

350. Limitation 8(h) is the same as limitation 1(h) except for the removal of "prior to attachment of the definitive screw" after "abutment." Therefore, the analysis above in section X.D.2.h for limitation 1(h) applies to limitation 8(h).

i. Limitation 8(i): wherein the temporary fastener is configured to release at least a portion of the temporary fastener and the coping from the implant abutment as a unit when an axial release force is applied in a proximal direction to the temporary fastener

351. Limitation 8(i) is the same as limitation 1(i). Therefore, the analysis above in section X.D.2.i for limitation 1(i) applies to limitation 8(i).

j. Limitation 8(j): wherein the distal shaft portion is sized and configured so that it does not engage the implant abutment threads continuously between a most distal position of the distal shaft portion and a proximal end of the implant abutment threads

352. Limitation 8(j) is the same as limitation 1(j). Therefore, the analysis above in section X.D.2.j for limitation 1(j) applies to limitation 6(j).

k. Limitation 8(k): wherein a volume of definitive screw post material of the distal post portion of the definitive screw that is located distally of the proximal end of the implant abutment threads when in position to hold the coping against the implant abutment is greater than a volume of temporary fastener shaft material of the distal shaft portion of the temporary fastener that is located distally of the proximal end of the implant abutment threads when in position to hold the coping against the implant abutment

353. As explained above, it would have been obvious to use a temporary fastener with a split-post structure and flexible buttress threads in Bernhard's system.

354. As explained above, the asymmetric buttress thread of the temporary fastener would have a smaller (shallower) proximal thread angle. As a result, unlike the symmetric threads of the shaft 754 of the threaded fastener 750, the buttress threads of the temporary fastener would not match and would not fully contact and occupy the symmetric threads of the bore 654 of the abutment 650. Therefore, the buttress threads would occupy less volume of the symmetric threads in the bore 654 of the abutment 650 than the matching, symmetric threads of the

shaft 754 of the threaded fastener 750. Ex. 1003, [0134], Fig. 12. Indeed, Patent Owner confirmed this for the buttress thread of the temporary fastener of Figure 75 during prosecution of the ’992 patent. Patent Owner told the examiner that the asymmetric threads of the temporary fastener of Figure 75 make contact with less area of, and occupy less volume of, threads 18 of abutment 8 than the threads of definitive screw 75 of Figure 9 because of “the open space created on the proximal side of the male thread” of the temporary fastener “due to the angle lying closer to the axis”:

> The open space created on the proximal side of the male thread of temporary fastener 190 relative to the female thread(s) due to the angle lying closer to the axis represents a portion of the female abutment thread that is filled with the definitive screw when engaged as shown in FIG. 9. As a result of the open space from the different thread profile of the temporary screw compared to the definitive screw in FIG. 9, the temporary screw threading of FIG. 75 has less surface area contact with the female implant abutment threading, has less material volume within the engagement depth with the implant abutment and can have a smaller radial extent or width than the definitive screw.

Ex. 1015 at 298.

355. Therefore, a volume of the definitive screw post material of the distal post portion of the definitive screw (threaded fastener 750) that is located distally of the proximal end of the threads of the bore 654 of the implant abutment 650

when in position to hold the coping 700 against implant abutment 650 is greater than a volume of the temporary fastener shaft material of the distal shaft portion of the temporary fastener that is located distally of the proximal end of the threads of the bore 654 of the implant abutment 650 when in position to hold the coping 700 against the implant abutment 650. Ex. 1003, [0134], Fig. 12.

10. Claim 9: The dental system of claim 1, wherein the temporary fastener is polymeric, and wherein the distal shaft portion of the temporary fastener is hollow

356. In my opinion, as explained below, claim 9 would have been obvious to a POSA before October 9, 2018, based on Bernhard in view of Poovey, Gracco and Derey.

357. As explained above, it would have been obvious to use a temporary fastener with flexible buttress threads and a split-post structure in Bernhard's system.

358. The distal shaft portion of this temporary fastener would be hollow inside the slot.

359. Poovey discloses making the threads of the temporary fastener out of a flexible material, such as silicone (a polymer), and Derey discloses making his device out of a polymer. Ex. 1005, [0079], [0084]; Ex. 1008 at 4, 9

11. Claim 11: The dental system of claim 10, wherein the shaft threading does not have a continuous threading contour along its path around the longitudinal axis.

360. In my opinion, as explained below, claim 11 would have been obvious to a POSA before October 9, 2018, based on Bernhard in view of Poovey, Gracco and Derey.

361. As explained above, it would have been obvious to use a temporary fastener with flexible buttress threads and a split-post structure in Bernhard's system.

362. As a result of the split-post structure created by the slot, there would be a gap on either side of the threaded shaft of the temporary fastener. This gap would interrupt the helical thread pattern so that the shaft threading of the temporary fastener would not have a continuous threading contour along its path around the longitudinal axis.

12. Claim 13: The dental system of claim 10, wherein the temporary fastener comprises a PEEK material.

363. In my opinion, as explained below, claim 13 would have been obvious to a POSA before October 9, 2018, based on Bernhard in view of Poovey, Gracco and Derey.

364. As explained above, it would have been obvious to use a temporary fastener with flexible buttress threads and a split-post structure with deflecting legs in Bernhard's system.

365. It also would have been obvious to a POSA to make the split-post temporary fastener with deflecting legs out of a PEEK material.

366. PEEK (polyetheretherketone) is a well-known thermoplastic polymer used in the dental implant and prosthesis field.

367. PEEK has similar characteristics to Toarplast POM (polyoxymethylene), a thermoplastic that Derey teaches to make his temporary connector with deflecting legs. Ex. 1008 at 9.

368. Bernhard teaches making a temporary connector with deflecting legs out of a PEEK material. Ex. 1003, [0155]–[0158], Figs. 27A, 27B. Bernhard's snap-fit connector, shown in Figures 27A and 27B below, has a provisional connection feature 1406 in the form of elongate resilient fingers 1408 with an engagement protrusion 1410 that snap fits into a groove and can press against an interior surface, such as a recess or a bore. *Id.*, [0155]–[0157], Figs. 27A, 27B. Bernhard teaches that the resilient fingers can be made out of a PEEK material. Ex. 1003, [0158].

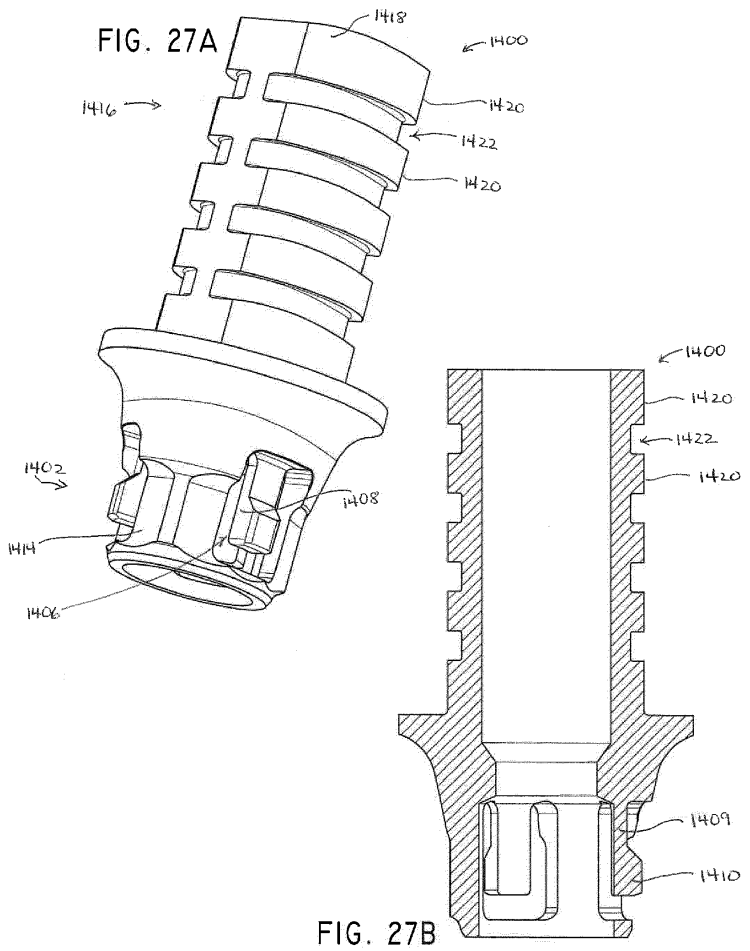

369. A POSA would have been motivated, based on Derey and Bernhard, to make the temporary fastener with deflecting legs of Figure 75 of Kofford out of a PEEK material, because PEEK has a high strength but would still enable the deflecting legs to deflect so that the temporary fastener could be pulled out of the implant abutment 650 in Bernhard's system, without being unscrewed.

370. A POSA would have had a reasonable expectation of success because PEEK is a well-known material used in the dental implant and prosthesis field and

designing the temporary fastener out of a PEEK material would have been within the level of ordinary skill.

13. Claim 14: The dental system of claim 10, wherein the distal shaft portion of the shaft of the temporary fastener is configured to deform during the application of the axial force in the proximal direction to thereby release the coping and the temporary fastener as the unit from the implant abutment.

371. In my opinion, as explained below, claim 14 would have been obvious to a POSA before October 9, 2018, based on Bernhard in view of Poovey, Gracco and Derey.

372. As explained above, it would have been obvious to use a temporary fastener with flexible buttress threads and a split-post structure with deflecting legs in Bernhard's system.

373. As further explained above, the two deflecting legs of the split-post structure would deflect inwardly into the hollow portion created by the slot in response to an axial force in the proximal direction. This would enable the temporary fastener and the coping 700 to be pulled out of the bore 654 of the implant abutment 650 without having to unscrew the temporary fastener.

374. Therefore, the distal shaft portion of the shaft of the temporary fastener would be configured to deform during the application of the axial force in the proximal direction to thereby release the coping 700 and the temporary fastener as the unit from the implant abutment 650.

XI. OBJECTIVE EVIDENCE OF NON-OBVIOUSNESS

375. I understand that objective evidence of non-obviousness must be considered in determining whether a patent claim would have been obvious to a POSA. I also understand that Patent Owner may attempt to introduce evidence that it contends is objective evidence of non-obviousness, such as commercial success or praise for its own commercial product. Because of this possibility, I have been asked to consider whether Patent Owner's commercial product practices (i.e. has a nexus with) any of the claims of the '781 patent.

376. I am aware that Patent Owner Smart Denture Conversions previously sold a "Separable Fastener." I am aware that Smart Denture Conversions has been renamed Smart on X. It appears that Smart on X sells the same Separable Fastener product that was previously sold by Smart Denture Conversions.

377. In my opinion, Patent Owner's Separable Fastener product does not practice any of claims 1–16 because the device does not satisfy all of the "temporary fastener" limitations of the claims.

378. The following images show the Separable Fastener sold by Smart Denture Conversions / Smart on X that I have considered thus far in forming my opinion:

Smart Denture Conversions

Immediate full-arch provisionalization

Convert a stronger provisional in less time

Smart Denture Conversions eliminates the need for large holes in the denture by allowing a closed-tray pickup. This is possible by fastening the Ti-Base to a Multi-Unit Abutment with a unique prosthetic screw, the Separable Fastener.

The Separable Fastener divides into two pieces for the pickup and the denture can be easily removed from the mouth prior to major modifications.

Faster
Process dentures in 30 minutes vs. the traditional two hours, significantly reducing the overall treatment time.

The Separable Fastener is the revolutionary patented technology behind Smart Denture Conversions. It significantly simplifies the procedure for converting a removeable denture to a screw-retained fixed prosthesis by allowing for a closed-tray pickup.

The Separable Fastener secures the TiBase to the multi-unit abutment the same way as a prosthetic screw, except the PEEK Cap (Screw Head) and the Threaded Post are designed to separate, allowing the denture to be removed from the mouth. The PEEK Cap will disengage and remain in the TiBase for the pickup while the threaded post remains in the multi-unit abutment.

Ex. 1016 at 4; Ex. 1014 at 1–2.

379. As shown above, Patent Owner's Separable Fastener consists of a threaded metal screw post with a separable PEEK cap. This Separable Fastener does not satisfy several limitations of claims 1–16.

380. First, the Separable Fastener's threaded post has symmetric threads that appear to match the symmetric threads of the implant abutment and therefore the symmetric threads of the definitive screw. Therefore, the distal shaft portion of the Separable Fastener's threaded post does not have a different thread pattern than the symmetric thread pattern of the definitive screw as required by claims 1–5 and 7–9 or the implant abutment threads as required by claims 10–16.

381. Second, the Separable Fastener's threaded post has a continuous thread. Therefore, the distal shaft portion of the Separable Fastener's threaded post has a thread that does continuously engage the abutment threads, instead of not continuously engaging the abutment threads as required by claims 1–9. Moreover, the distal shaft portion of the Separable Fastener's threaded post has a continuous threading contour along its path around the longitudinal axis, instead of not having a continuous threading contour as required by claim 11.

382. Third, the Separable Fastener's threaded post remains threaded in the abutment when the coping and the separable cap are pulled off the threaded post and out of the abutment. Therefore, the distal shaft portion of the outer surface of the Separable Fastener's threaded post does not deform when the coping is pulled out of the abutment as required by claim 5. Similarly, the distal shaft portion of the Separable Fastener's threaded post does not deform when the coping is pulled out of the abutment as required by claim 14.

383. Fourth, the Separable Fastener's threaded post is solid. Therefore, the distal shaft portion of the threaded post does not have an open space as required by claim 7. Similarly, the distal shaft portion of the threaded post is not hollow as required by claim 9.

384. Finally, the distal shaft portion of the Separable Fastener's threaded post appears to have the same maximum diameter as the implant abutment female threads and therefore the definitive screw threads. Therefore, the distal shaft portion does not have a smaller maximal width than the definitive screw threads as required by claim 15.

385. In sum, Patent Owner's Separable Fasteners do not satisfy all of the limitations of claims 1–16. Therefore, to the extent that Patent Owner's Separable Fastener product has enjoyed commercial success or received praise, there is no nexus between that success or praise and any of the claims. As a result, I understand that any such evidence would not constitute objective evidence of non-obviousness of any of claims 1–16.

XII. CONCLUSION

386. In signing this Declaration, I recognize that it will be filed as evidence in a post grant review before the Patent Trial and Appeal Board of the United States Patent and Trademark Office. I also recognize that I may be subject to cross-examination in the case and that cross-examination will take place within the

United States. If cross-examination is required, I will appear for cross-examination within the United States during the time allotted.

387. I declare that all statements made in this Declaration are made of my own knowledge and are true. and that all statements made on information and belief are believed to be true; and further that these statements were made with the knowledge that willful false statements and the like so made are punishable by fine or imprisonment, or both, under Section 1001 of Title 18 of the United States Code.

Executed on June 4, 2025, at Niskayuna, NY.

John B. Brunski

John B. Brunski

APPENDIX A: CLAIM LISTING

1(a)	1. A dental system comprising:
1(b)	a coping having a proximal end with an aperture; and
1(c)	an implant abutment having threads;
1(d)	a definitive screw having a proximal head end having a tool interface and a distal post portion having threads configured for securing the coping to the threads of the implant abutment, wherein the distal post portion having threads is sized to extend through the aperture of the coping; and
1(e)	a temporary fastener having an axis with a length measured along the axis and a lateral dimension providing different widths along the axis measured perpendicular to the axis, the temporary fastener comprising:
1(f)	a proximal portion with a width larger than the coping aperture; and
1(g)	a shaft comprising a distal shaft portion sized and configured for rotary engagement with the implant abutment threads,
1(h)	wherein the shaft of the temporary fastener extends through the aperture of the coping and the distal shaft portion engages the implant abutment threads with an engagement depth at a predetermined torque and is configured to cause the proximal portion of the temporary fastener to hold the coping into alignment with the implant abutment prior to attachment of the definitive screw,
1(i)	wherein the temporary fastener is configured to release at least a portion of the temporary fastener and the coping from the implant abutment as a unit when an axial release force is applied in a proximal direction to the temporary fastener,
1(j)	wherein the distal shaft portion is sized and configured so that it does not engage the implant abutment threads continuously between a most distal position of the distal shaft portion and a proximal end of the implant abutment threads,
1(k)	wherein the distal shaft portion of the temporary fastener comprises threading which is sized and configured to make contact with the implant abutment threads over a first threading contact area to hold the coping

	against the implant abutment, wherein the distal post portion of the definitive screw is sized and configured to make contact with the implant abutment threads over a second threading contact area to hold the coping against the implant abutment, and wherein the first threading contact area is less than the second threading contact area.
2	2. The dental system of claim 1, wherein the distal shaft portion of the temporary fastener comprises asymmetric threading.
3	3. The dental system of claim 1, wherein the axial release force in the proximal direction is applied through a pick-up process in which the coping is bonded and/or adhered to a dental element.
4	4. The dental system of claim 1, wherein the threads of the distal post portion of the definitive screw comprise a continuous form.
5	5. The dental system of claim 1, wherein the distal shaft portion of the temporary fastener comprises an outer surface which is sized and configured to deform in response to the axial release force in the proximal direction whereby the at least a portion of the temporary fastener and the coping are released together as the unit.
6(a)	6. A dental system comprising:
6(b)	a coping having a proximal end with an aperture; and
6(c)	an implant abutment having threads;
6(d)	a definitive screw having a proximal head end having a tool interface and a distal post portion having threads for securing the coping to the threads of the implant abutment after processing, wherein the distal post portion having threads is sized to extend through the aperture of the coping; and
6(e)	a temporary fastener having an axis with a length measured along the axis and a lateral dimension providing different widths along the axis measured perpendicular to the axis, the temporary fastener comprising:
6(f)	a proximal portion with a width larger than the coping aperture; and
6(g)	a shaft comprising a distal shaft portion sized and configured for rotary engagement with the implant abutment threads,

6(h)	wherein the shaft of the temporary fastener is sized and configured to extend through the aperture of the coping and the distal shaft portion to engage the implant abutment threads with an engagement depth at a predetermined torque and is configured to cause the proximal portion of the temporary fastener to hold the coping into alignment with the implant abutment,
6(i)	wherein the temporary fastener is configured to release at least a portion of the temporary fastener and the coping from the implant abutment as a unit in response to an axial release force that is applied only in a proximal direction to the temporary fastener whereby the axial release force is applied without rotation of the temporary fastener, and
6(j)	wherein the distal shaft portion is sized and configured so that it does not engage the implant abutment threads continuously between a most distal position of the distal shaft portion and a proximal end of the implant abutment threads.
7	7. The dental system of claim 1, wherein the distal shaft portion of the temporary fastener comprises an open space, and wherein a portion of the axis is located within the open space.
8(a)	8. A dental system comprising:
8(b)	a coping having a proximal end with an aperture; and
8(c)	an implant abutment having threads;
8(d)	a definitive screw having a proximal head end having a tool interface and a distal post portion having threads for securing the coping to the threads of the implant abutment, wherein the distal post portion having threads is sized to extend through the aperture of the coping; and
8(e)	a temporary fastener having an axis with a length measured along the axis and a lateral dimension providing different widths along the axis measured perpendicular to the axis, the temporary fastener comprising:
8(f)	a proximal portion with a width larger than the coping aperture; and

8(g)	a shaft comprising a distal shaft portion sized and configured for rotary engagement with the implant abutment threads prior to attachment of the definitive screw,
8(h)	wherein the shaft of the temporary fastener extends through the aperture of the coping and the distal shaft portion engages the implant abutment threads with an engagement depth at a predetermined torque and is configured to cause the proximal portion of the temporary fastener to hold the coping into alignment with the implant abutment,
8(i)	wherein the temporary fastener is configured to release at least a portion of the temporary fastener and the coping from the implant abutment as a unit when an axial release force is applied in a proximal direction to the temporary fastener,
8(j)	wherein the distal shaft portion is sized and configured so that it does not engage the implant abutment threads continuously between a most distal position of the distal shaft portion and a proximal end of the implant abutment threads,
8(k)	wherein a volume of definitive screw post material of the distal post portion of the definitive screw that is located distally of the proximal end of the implant abutment threads when in position to hold the coping against the implant abutment is greater than a volume of temporary fastener shaft material of the distal shaft portion of the temporary fastener that is located distally of the proximal end of the implant abutment threads when in position to hold the coping against the implant abutment.
9	9. The dental system of claim 1, wherein the temporary fastener is polymeric, and wherein the distal shaft portion of the temporary fastener is hollow.
10(a)	10. A dental system comprising:
10(b)	an implant abutment having threads having an implant abutment threads contour and an implant abutment longitudinal axis;
10(c)	a coping having a proximal end with a central aperture, and

10(d)	a temporary fastener having a longitudinal axis with a length measured along the longitudinal axis and a width dimension measured perpendicular to the longitudinal axis, the temporary fastener comprising:
10(e)	a head with a proximal end having a drive tool interface sized and configured for rotating the temporary fastener to a predetermined torque, wherein the head resides external to the central aperture of the coping, and
10(f)	a shaft coupled to or integral with the head that extends through the central aperture of the coping, the shaft comprising:
10(g)	a distal portion having an outer surface comprising shaft threading having a shaft threading contour, wherein the shaft threading contour does not essentially match the implant abutment threads contour, and
10(h)	a proximal portion with an outer surface devoid of shaft threading,
10(i)	wherein, the temporary fastener is configured so that when the distal portion of the shaft extends through the central aperture of the coping and engages the threads of the implant abutment at a predetermined torque, the shaft threading engages the threads of the implant abutment whereby the shaft threading cooperates with the threads of the implant abutment and is sized and configured to pull the coping into position with the implant abutment,
10(j)	wherein the temporary fastener is configured so that in response to application of an axial release force above a predetermined value in a proximal direction, the coping and the temporary fastener are released as a unit from the implant abutment, and
10(k)	wherein the axial force above the predetermined value in the proximal direction is configured to be applied in a pick-up process after the coping is adhesively bonded to a prosthesis or in a closed tray impression process.
11	11. The dental system of claim 10, wherein the shaft threading does not have a continuous threading contour along its path around the longitudinal axis.

12	12. The dental system of claim 10, wherein the temporary fastener comprises a polymer.
13	13. The dental system of claim 12, wherein the temporary fastener comprises a PEEK material.
14	14. The dental system of claim 10, wherein the distal shaft portion of the shaft of the temporary fastener is configured to deform during the application of the axial force in the proximal direction to thereby release the coping and the temporary fastener as the unit from the implant abutment.
15	15. The dental system of claim 10, further comprising a definitive screw comprising threads configured to engage the implant abutment, wherein a maximal width of the distal portion of the shaft of the temporary fastener is smaller than a maximal width of the threads of the definitive screw.
16	16. The dental system of claim 10, further comprising a definitive screw comprising threads configured to engage the implant abutment, wherein a profile pattern of the threading of the temporary fastener is configured to define a first abutment contact area with the threads of the implant abutment, wherein a profile pattern of the threads of the definitive screw is configured to define a second abutment contact area with the threads of the implant abutment, and wherein the first abutment contact area is less than the second abutment contact area.

APPENDIX B: EXHIBITS

Exhibit No.	Description
1001	U.S. Patent No. 11,937,992
1002	Expert Declaration of John B. Brunski, Ph.D.
1003	U.S. Patent Application Pub. No. US 2017/0202649 A1 (Bernhard)
1004	U.S. Patent No. 6,283,752 (Kumar)
1005	U.S. Patent Application Pub. No. US 2016/0045290 A1 (Poovey)
1006	A. Gracco et al., "Effects of Thread Shape on the Pullout Strength of Miniscrews," 142 *Amer. J. Orthodontics & Dentofacial Orthopedics*, 186–90 (2012) (Gracco)
1007	Declaration of Lindsay Allen re Gracco
1008	PCT Patent Application No. WO 2013/030839 A1 (Derey)
1009	U.S. Provisional Patent Application No. 62/742,942
1010	U.S. Provisional Patent Application No. 62/774,402
1011	U.S. Provisional Patent Application No. 62/818,082
1012	U.S. Patent Application No. 16/596,361
1013	U.S. Patent No. 11,311,354 (Kofford)
1014	Smart Denture Conversions Webpage – Separable Fastener
1015	Prosecution History of U.S. Patent Application No. 18/328,730
1016	Smart Denture Conversions – Technique Guide
1017	Complaint, D.I. 1 (April 23, 2024), *Smart Denture Conversions, LLC v. Straumann USA, LLC*, No. 1:24-cv-00507-JCB (D. Del.)
1018	U.S. Patent Application No. 17/691,108

Exhibit No.	Description
1019	NeoConvert Brochure
1020	Prosecution History of U.S. Patent Application No. 18/424,696
1021	Supplemental Complaint, D.I. 34 (Feb. 4, 2025), *Smart Denture Conversions, LLC v. Straumann USA, LLC*, No. 1:24-cv-00507-JCB (D. Del.)

APPENDIX C – CURRICULUM VITAE

CURRICULUM VITAE

JOHN B. BRUNSKI

ADDRESS

Division of Plastic & Reconstructive Surgery
Department of Surgery
300 Pasteur Drive, Mail Code 5501
School of Medicine, Stanford University
Stanford, CA 94305
FedEx and UPS: 1651 Page Mill Road, Palo Alto CA 94305

EDUCATION

B.S.	Metallurgy and Materials Science, University of Pennsylvania	1970
M.S.	Materials Science and Engineering, Stanford University	1972
Ph.D.	Metallurgy and Materials Science, University of Pennsylvania	1977

ACADEMIC APPOINTMENTS

1977-1983	Assistant Professor, Biomedical Engineering, Rensselaer Polytechnic Institute
1983-1994	Associate Professor, Biomedical Engineering, Rensselaer Polytechnic Institute
1994-2009	Professor, Biomedical Engineering, Rensselaer Polytechnic Institute
2005 (Fall)	Sabbatical leave at Stanford University (Children's Hospital Surgical Research Lab) and University of Montréal (Laboratory for Calcified Tissues)
2009-present	Senior Research Engineer, Division of Plastic & Reconstructive Surgery, Department of Surgery, School of Medicine, Stanford University
2010-2011	Faculty Associate, College of Nursing & Health Innovation, Arizona State University, Phoenix campus, Phoenix, AZ (graduate program, Regulatory Science)
2010-present	Professor Emeritus, Department of Biomedical Engineering, Rensselaer Polytechnic Institute, Troy, NY

PERSONAL DATA

Date of Birth: 6/10/49
Marital Status: Married

PROFESSIONAL SOCIETIES

Academy of Osseointegration
Orthopaedic Research Society
International Association for Dental Research

SERVICE ON FEDERAL GOVERNMENT/ PUBLIC ADVISORY COMMITTEES

2018 - 2019	Member, MOSSD10 NIH Study Section for Small Business Innovation Research/Small Business Technology Transfer (R41/R42/R43/R44) Reviews
2009 - 2012	Member, NIH Study Section MTE "Musculoskeletal Tissue Engineering"

2000 - 2009	*Ad hoc* Member, NIH Study Section MTE "Musculoskeletal Tissue Engineering"
2007	*Ad hoc* Member, NIH Study Section ZRG1 MOSS-L (10) "Small Business: Orthopedics"
1994 - 98	*Ad hoc* Member, NIH Study Section OBM 2 - Oral Medicine and Biology 2
1998	*Ad hoc* Member, NIH-NIDR Special Emphasis Panel
1996 - 2015	*Ad hoc* Reviewer, Medical Research Council of Canada, Dental Sciences
1994 - 2002	Scientific Advisory Board, Implant Dentistry Research /Education Foundation
1988 - 2000	Consultant to Dental Devices and Products Panel, FDA

HONORS AND AWARDS

1. President, Implantology Research Group, International Association for Dental Research (IADR), 1992.
2. Invited as one of 15 outstanding young U.S. investigators in biomechanics to the *Third US-China-Japan Conference on Biomechanics*, Georgia Tech University, August 25-29, 1992.
3. Part of a 10-person Rensselaer team receiving *Boeing Outstanding Educator Award*, Fall 1995.
4. Received a certificate for significant contributions to Rensselaer's winning of the *1995 Theodore M. Hesburgh Award for Excellence in Undergraduate Education*
5. Part of the faculty and staff team that helped Rensselaer win the *1996 Pew Leadership Award.*
6. Part of the Rensselaer faculty team that won the *Premier Award for Excellence in Engineering Education Courseware*, Dec. 2000, sponsored by NEEDS and John Wiley and Sons. (in part for work on NSF's "Project Links" at Rensselaer)
7. Part of the Rensselaer faculty team that won the *2001 American Society of Mechanical Engineers (ASME) Curriculum Innovation Award*, given to the team members of NSF's "Project Links", "…to recognize and encourage innovation in Mechanical Engineering (ME) and Mechanical Engineering Technology (MET) Education…"
8. 2001 recipient of the *Isaiah Lew Memorial Research Award*, American Academy of Implant Dentistry Research Foundation
9. Appointed as the *1st William R. Laney Visiting Professor*, Sept. 2006, Division of Prosthodontics, Mayo Clinic, Rochester, MN.
10. *2006 Jerome M. and Dorothy Schweitzer Research Award*, presented Dec. 1, 2006 at the Greater New York Academy of Prosthodontics, New York City, NY.
11. *Tjellström Award* for 2007, Craniofacial Osseointegration and Maxillofacial Prosthetics Rehabilitation Unit (COMPRU), Edmonton, Alberta, Canada.
12. 2008 *Astra Tech Scientific Award for Applied Research in Osseointegration*, presented 6/7/08 at the Astra Tech World Congress, Washington DC.
13. Fellow, 2011, International Academy for Oral and Facial Rehabilitation (IAOFR)

MEMBERSHIPS ON EDITORIAL BOARDS

1991 - present Associate Editor, *Int. J. Oral Maxillofac. Implants*

Previous membership on Editorial Boards:

1993 - 2007	Assistant Editor, *J. Biomed. Materials Res.*
1997 - 2005	Member, Editorial Board, *J. Dent. Res.*
1998 - 2011	Member, Editorial Board, *J. Applied Biomaterials*
1993 - 2005	Member, Editorial Board, *J. Biomechanics*
1990 - 2009	Member, Editorial Board, *Clin. Oral Implant Res.*

Reviewing for other journals: *J Biomechanical Engineering, J Orthop Res, J Dent Res, Clin Oral Implants Res, J Prosth Dentistry, J Mechanical Behavior of Biological Materials, Materials & Design*

INDUSTRIAL CONSULTING & ASSISTANCE IN PRODUCT DEVELOPMENT (in chronological order over the last 25 years)

1. Nobel Biocare AB, Göteborg, Sweden (testing of dental implants in relation to development of the Nobel Biocare Mark IV implant, 1998)
2. Nobel Biocare, Yorba Linda, Calif. (finite element analysis of dental implants)
3. Pfizer (Warner-Lambert), Morris Plains, NJ (measurement of calculus attachment to enamel)
4. Bicon Dental Implants, Boston MA (testing of dental implants, specifically the strength of taper-lock connections)
5. Theratechnologies Inc., Montreal, Canada (testing of "snap-on" overdenture prostheses)
6. Embed Technology, LLC, Flemington, NJ (evaluation of new mini-dental implant technology, 2008-2010)
7. Autonomic Technologies, Redwood City, CA (evaluation of maxillofacial implant technology, 2009)
8. Alphatec Spine, Inc., Carlsbad, CA (assessment of Ti alloys, 2010)
9. Neoss Limited, Harrogate, UK (research and development of dental implants, specifically tapered dental implants, 2009-March 2012)
10. Nobel Biocare, Zurich, Switzerland (research and development of new oral implants, 2012-2022)

LEGAL CONSULTING & EXPERT WITNESS ACTIVITY (1984-present)

1. J. Richard Williams, Esq., Albany, NY, 1984 (fracture of Harrington spinal distraction rod)
2. Lassen, Smith, Katzenstein, and Furlow, Counselors at Law, Wilmington, DE, 1991 (analysis of dental implant design rationale, patents, and performance in patients)
3. White & Case, New York, NY 1993 (dental implant design and patent validity)
4. Thomas, Garvey, Garvey, and Sciotti, Counselors at Law, Mt. Clemens, MI, 1994 (failure analysis of a subperiosteal dental implant)
5. Godard, West and Adelman, Counselors at Law, Fairfax, VA, 1994 (failure analysis of an arthroscopic knee surgery instrument)
6. Croutier & Ryan Esqs., Garden City, NY, 1995 (failure analysis of dental implants)
7. Welsh & Katz, Ltd., 120 South Riverside Plaza, Chicago IL, 1998-99 (dental implant design and patent infringement)
8. Evenson, McKeown, Edwards & Lenahan, P.L.L.C., Washington DC, 2000 (dental implant design and patent infringement)
9. Litchfield-Cavo, Chicago IL, 2000-01 (dental implant fractures)
10. Genese Dopson Smith and Assoc., San Rafael, CA, 2001 (dental implant fractures)
11. Litchfield-Cavo, Chicago IL, 2001-02 (dental implant patent infringement)
12. Carolyn Merchant PC, Albuquerque NM, 2000-02 (TMJ implant failure)
13. Avolio & Hanlon, P.C., Lawrenceville, NJ, 2001-02 (TMJ implant failures: three cases)
14. Heafey, Roach & May, Los Angeles, CA, 2001 (oral implants and clinical trials)
15. Brobeck, Phleger & Harrison LLP, San Diego, CA 2001-02 (dental implant & trade dress)
16. Knobbe Martens Olson & Bear, LLC, Irvine, CA 2003-2004 (patent infringement, dental implants)
17. Paul Hastings, Janofsky & Walker LLP, San Diego CA, and Kaye Scholer, NYC, NY, 2004 (patent infringement, dental implants)
18. Colleen Whalen, Esq., Clifton Park, NY, 2005-06 (failure analysis of a fractured dental implant)
19. Quinn Emanuel Urquhart Oliver & Hedges, LLP, Los Angeles, CA, 2005-07 (assessment of dental implant mechanics)
20. Knobbe Martens Olson & Bear, LLC, Irvine, CA, 2008-2009 (patent infringement, dental implants)

21. Knobbe Martens Olson & Bear, LLC, Irvine, CA, 2005-2014 (patent infringement, dental implants)
22. D'Amico, Griffin & Pettinicchi, LLC, Watertown, CT 2009-2014 (failure analysis of a fractured maxillofacial bone plate)
23. Tigran Technologies AB, Medeon Science Park, SE-205 12 Malmö, Sweden 2011-2012 (biomechanical analysis of particulate biomaterials)
24. IntriMed Technologies, 1850 Eastman Avenue, Oxnard, CA 2011-2012 (assessment of implant surface texturing)
25. Shapiro, Fishman & Gaché, LLP, 2424 N. Federal Highway, Suite 360. Boca Raton, FL 33431, 2011-2013 (litigation relating to dental implant system development)
26. Tracy A. Gallegos, Esq., Morris Polich & Purdy LLP, 3883 Howard Hughes Pkwy., Suite 560, Las Vegas, Nevada 89169 2011-2013 (investigation of oral implant failures – case settled)
27. Mayer Brown LLP, 1675 Broadway, New York, NY, 2011-2015 (expert witness in a patent infringement case involving an overdenture attachment system for dental implants – case settled)
28. Procopio, Cory, Hargreaves & Savitch LLP, Attorneys at Law, Scottsdale, AZ, 2014 - Feb. 2016 (expert witness in a patent infringement case involving an intraoral dental device – case settled)
29. Marshall, Dennehy, Warner Coleman & Coggin, Attorneys at Law, Philadelphia PA, 2014-Feb. 2016 (expert witness in a case involving oral implants and their stability under conditions of immediate loading: case settled in Spring 2016)
30. Robinson, Waters & O'Dorisio, P.C., 1099 18th St., Suite 2600, Denver CO 80202, Jan. 1016-July 2016 (settled July 2016, possible patent infringement involving dental cutting instruments)
31. Knobbe Martens Olson & Bear, LLC, Irvine CA, 2014 (patent infringement, dental implants)
32. Mayer Brown LLP, 71 South Wacker Drive, Chicago, Illinois 60606-4637, July 2015-May 2016 (possible patent infringement involving oral implants. As of summer 2016, this case was transferred to the firm Stueve Siegel Hansen LLP, Kansas City, Missouri.)
33. Foley & Lardner LLP, 555 California Street, Suite 1700, San Francisco CA 94104, and Gardere Wynne Sewell LLP, 2021 McKinney Ave. Suite 1600, Dallas, Texas 75201, Summer 2017 through September 2017, US District Court, Northern District of California, San Jose Division (case about patent infringement, involving a system used in orthodontic case planning)
34. Biren Law Group, Los Angeles CA, February 2018 – 2019 (analysis of a fractured dental implant in a patient – case settled summer 2019)
35. Charhon, Callahan, Robson & Garza, PLLC, 3333 Lee Parkway, Suite 460, Dallas, Texas 75219, approximately August - October 2018 (non-testifying expert in a case involving patent 8,277,218 to D'Alise)
36. Latham & Watkins LLP, 505 Montgomery Street, Suite 2000, San Francisco, CA, 2019–2022 (patent case regarding oral implant abutments, Harrison Prosthetic Cradle, Inc. v. ROE Dental Laboratory, Inc., et al., involving technology related to All-on-4 dental implant systems)
37. Wolf, Greenfield & Sacks, P.C., Boston, MA, starting Nov. 11, 2023 (non-testifying expert in an intellectual property case involving Straumann USA, LLC, and OCO Biomedical Inc., both companies making dental implants). Settled as of 5/23/24.
38. Howarth and Smith, Malibu, CA, starting Nov. 13, 2023 to Nov. 22, 2024 (intellectual property case involving the owners of a patent on dental implants vs. a law firm that previously represented those patent owners)

<u>Depositions in the last 10 years</u>:

- Deposition in connection with case #19 (above), May 2007, Superior Court of the State of California in and for the County of Los Angeles, Case No. BC209992 [Related to BC263071], Sargon Enterprises, Inc. v. University of Southern California

- Deposition in connection with case #20 (above) in May 27, 2009, in United States District Court for the Central District of California Western Division, Civil Action No. CV08-1407 ODW (RZx), Nobel Biocare USA, LLC v. Blue Sky Bio, LLC.
- Depositions in connection with case #22 (above) on May 2, 2011; April 30, 2012; and April 14, 2014
- Deposition in connection with case #25 (above), April 23, 2012
- Deposition in connection with case #27 (above), June 20, 2014
- Deposition in connection with case #36 (above), November 9, 2022
- Deposition in connection with case #38 (above), September 10, 2024

More details about cases 19, 20, 22, 25-29, 36, 38 above

Name of court	Case No.	Judge	Plaintiff v. Defendant	Served for:
For Case 19: SUPERIOR COURT OF THE STATE OF CALIFORNIA, in and for the COUNTY OF LOS ANGELES	BC209992 [Related to BC263071]	none assigned during period of my work	SARGON ENTERPRISES, INC., v. UNIIVERSITY OF SOUTHERN CALIFORNIA	defendant
For Case 20 in CV: UNITED STATES DISTRICT COURT FOR THE CENTRAL DISTRICT OF CALIFORNIA WESTERN DIVISION	Civil Action No. CV08-1407 ODW (RZx)	Hon. Otis D. Wright II	NOBEL BIOCARE USA, LLC, a Delaware limited liability company, NOBEL BIOCARE SERVICES AG, a Swiss corporation, and NOBEL BIOCARE AB, a Swedish corporation, Plaintiffs, v. BLUE SKY BIO, LLC, an Illinois limited liability company, Defendant.	Plaintiff (case settled December 2009)
For case 22 in CV: UNITED STATES DISTRICT COURT DISTRICT OF CONNECTICUT	CIVIL ACTION N0.3:09-CV-00828	none assigned during period of my work	CHRISTINE NAPOLITANO Plaintiff, v. SYNTHES, INC. Defendant	Plaintiff (case settled June 2014)
For case 25 in CV: UNITED STATES DISTRICT COURT SOUTHERN DISTRICT OF FLORIDA WEST PALM BEACH DIVISION	9:10 CV 80454-MARRA	none assigned during period of my work	JACK T. KRAUSER, D.M.D., an individual, Plaintiff, v. BIOHORIZONS, INC., a Delaware corporation, BIOLOK INTERNATIONAL, INC., a Delaware corporation, and BIOHORIZONS IMPLANT SYSTEMS, INC., a Delaware corporation, Defendant	Plaintiff (case ongoing)

For Case 26 in CV: DISTRICT COURT, CLARK COUNTY, NEVADA	A10-618582C	none assigned during period of my work	DENTAL IMPLANT INSTITUTE OF LAS 4 VEGAS, a Nevada corporation, Plaintiff, v. NEOSS, INC., a Delaware corporation; and ERIK SJOGREN; DOES I-V and ROE ENTITIES I-V, inclusive, Defendants.	Plaintiff (case settled in 2013)
For Case 27 in CV: UNITED STATES DISTRICT COURT SOUTHERN DISTRICT OF CALIFORNIA	10-CV-541 GPC(WVG) ECF CASE	none assigned during period of my work	ZEST IP HOLDINGS, LLC, and ZEST NCHORS, LLC, Plaintiffs, v. IMPLANT DIRECT MFG. LLC; IMPLANT DIRECT LLC; and IMPLANT DIRECT INT'L, et al. Defendants.	Plaintiff (case settled 7/17/15)
For Case 28 in CV: UNITED STATES DISTRICT COURT FOR THE CENTRAL DISTRICT OF CALIFORNIA, WESTERN DIVISION	2:13-cv-07501-ODW (ASx)	Hon. Otis D. Wright III	INNERLITE, INC. dba ISOLITE SYSTEMS, a California corporation, Plaintiff, v. ZIRC DENTAL PRODUCTS, INC., a Minnesota corporation, BRIAN P. BLACK, BRIAN P. BLACK, DDS, INC., a California corporation, and JOOGATECH, INC., a California corporation, Defendants.	Plaintiff (case settled 12/7/15)
For Case 29 in CV: IN THE COURT OF COMMON PLEAS, MONTGOMERY COUNTY, PENNSYLVANIA	NO. 11-16181	none assigned during period of my work	TERRY ORNSTEIN and STEPHEN ORNSTEIN, plaintiffs, v. THOMAS BALSHI, DMD and PROSTHDONTICS INTERMEDICA, P.C.	Defendant (case settled 3/6/16)
For Case 36 in CV: IN THE UNITED STATES DISTRICT COURT FOR THE NORTHERN DISTRICT OF OHIO EASTERN DIVISION	CASE NO. 1:22-cv-00341	J. PHILIP CALABRESE	HARRISON PROSTHETIC CRADLE, INC., Plaintiff, v. ROE DENTAL LABORATORY INC., et al., Defendants.	Plaintiff, (case settled in January 30, 2023)
For Case 38 in CV:	CASE NO. 21STCV42444	none assigned during period	SPITZ TECHNOLOGIES CORP., Plaintiff,	Plaintiff

Superior Court of Calif., County of Los Angeles		of my work to date	v. MICHELMAN & ROBINSON, LLP	

PRIVATE BUSINESS VENTURE

J. Brunski was Senior VP and Chief Operating Officer of *OsseoConception, LLC*, Spokane, WA, 2007-2018; this LLC was formed in 2007 together with Dr. Kenji W. Higuchi (CEO), an oral & maxillofacial surgeon in Spokane, WA. Activities include consultation on medical device innovation and implant development.

TEACHING EXPERIENCE -- undergraduate & graduate courses taught 1977-2009 at Rensselaer Polytechnic Institute, Troy, NY

Undergraduate Core Engineering Courses

1. 20.250 Materials I (elementary materials science), '78-'81
2. 20.205 Mechanics I (statics and dynamics of rigid bodies), '82-'84
3. 20.201 Engineering Modeling and Design (engineering design), '83-'89 (once as course director)
4. 20.206 Mechanics II (solid mechanics), '89
5. 20.1916 Intro. to Eng. Analysis (statics, linear algebra and computing), Pilot Version I, '89
6. 20.110 Intro to Eng. Analysis, " Pilot Version II, '90
7. 20.110 Intro. to Eng. Analysis, " Pilot Version III, '91
8. 20.110 Intro. to Eng. Analysis, full-scale version, '92, '93, '94 (course director, 10 sections)
9. 20.1104 Intro to Eng. Analysis, Studio/Laptop Computing Version, '95 -2002

Undergraduate Biomedical Engineering Courses

1. 31.406 Introduction to Biomaterials, '78 -'86
2. 31.406 Intro to Biomat. & Biomech., '86, '88
3. 31.456 Fundamentals of Biomat./Biomech., '90
4. 31.455 Biomaterials, '92 - '99
5. 31.407 Biomaterials/Biomechanics Laboratory, '81, '82
6. 31.460 BME Design, individual senior projects, '77-'04
7. 31.460 BME Design, course director '90, '91, 2002-2004
8. 31.460 BME Design for Biomaterials. & Biomechanics '92-'96
9. BMED 2961 Biomaterials Science & Engineering, 2005-2006
10. BMED 4962 Biomech. of Soft Tissues ("hybrid" undergrad and grad course), 2006, 2008
11. BMED 2100 Biomaterials Science & Engineering, 2007, 2008, 2009
12. BMED 4962 Biomech. of Hard Tissues ("hybrid" undergrad and grad course), 2007

Graduate Biomedical Engineering Courses

1. 31.631 Properties of Hard Connective Tissues, '85, '87
2. 31.628 Biomech. of Soft Tissues, '89, '91, '93, '95, '97, '00, '01, '03,'06
3. 31.629 Biomech. of Hard Tissues, '90, '91, '92, '94, '96, '98, '00, '01, '02, '04, '07
4. 31.624 The Tissue-Implant Interface (with R. Bizios), '90
5. 31.690 and 31.490 BME Seminar, '79-'83
6. BMED 6280 Biomech. of Soft Tissues (hybrid undergrad and grad course), 2006, 2008
7. BMED 6290 Biomech. of Hard Tissues (hybrid undergrad and grad course), 2007

TEACHING EXPERIENCE -- graduate course taught at Arizona State University (ASU) 2012

HCR 556 Quality Systems and Standards for Medical Products, spring 2012 (ASU's Phoenix downtown campus, School of Nursing)

THESIS SUPERVISION – at Rensselaer Polytechnic Institute, 1977-2009

Masters Degrees: 39
Doctoral Degrees: 10
Undergraduate Research and BME Capstone Design Students: ~ 6 to 12 students/yr since 1977

UNDERGRADUATE STUDENT ADVISING -- at Rensselaer Polytechnic Institute, 1977-2009

Typical undergraduate advising load per semester: 40-50 BME students

SERVICE TO DEPARTMENT AND UNIVERSITY AT RENSSELAER POLYTECHNIC INSTITUTE (selected from the last 15 years prior to retirement in Dec. 2009)

For the BME Department

Chaired two search committees for junior faculty
Served on two search committees for BME department Chairmen
Served as Chair of the BME undergraduate curriculum committee for 4 years
Served as ABET coordinator in the BME department for 2 years
Served as Chair of the BME graduate committee for 2 years

For the Engineering School and University

Member of the School of Engineering Promotion & Tenure Committee
Member, School of Engineering Curriculum Committee
Chair, School of Engineering Faculty Awards Committee
member, search committee for a Chairman of the Biology department
Secretary of Faculty Senate, 2 years
Served on a process reengineering team on Advising and Registration
Served on a process reengineering team on laptop computing for Rensselaer students
Member, School of Engineering committee on Faculty Evaluation and Compensation
Chair and/or member of the Institute Animal Care and Use Committee
Chair, Faculty Senate Budget & Planning Committee
Member, Faculty Senate sub-committee on revisions to the Institute's IP policy

BOOK CHAPTERS

1. Brunski JB, "Design of a Transducer for Measuring *In Vivo* Forces on Endosseous Dental Implants," in *Advances in Biomaterials, 3* (eds. G.D. Winter, D.F. Gibbons and H. Plenk), John Wiley & Sons, U.K., pp. 347-353 (1982)

2. Brunski JB, Moccia AF, Jr., Pollack SR, Korostoff E, and Trachtenberg D, "Investigations of the Surfaces of Retrieved Endosseous Dental Implants of Commercially Pure Titanium," in *Titanium and Its Alloys for Surgical Implants,* ASTM Special Technical Publication #796 (H.A. Luckey and F. Kubli, eds.), pp. 189-205 (1983)

3. Hipp JA, Brunski JB, Shephard MS, Cochran GVB, "Finite Element Models of Implants in Bone: Interfacial Assumptions," in *Biomechanics: Current Interdisciplinary Research* (S.M Perren and E. Schneider, eds.), Martinuus Nijhoff Publishers, Dordrecht, The Netherlands, pp. 447-452 (1983)

4. Brunski JB, "Tooth and Jaw, Biomechanics of," in *Encyclopedia of Medical Devices and Instrumentation*, Vol. 4 (J.G. Webster, ed.), John Wiley & Sons, New York, pp. 2776-2788 (1988)

5. Brunski JB, "The Influence of Force, Motion, and Related Quantities on the Response of Bone to Implants," in *Non-Cemented Total Hip Arthroplasty* (R. Fitzgerald, Jr., ed.), Raven Press Ltd., New York, pp. 7-21 (1988)

6. Brunski JB, Hipp JA, and Cochran GVB, "The Influence of Biomechanical Factors at the Tissue-Biomaterial Interface," in *Biomedical Materials and Devices*, Materials Research Society Symposium Proceedings, Vol. 110 (J.S. Hanker and B.L. Giammara, Eds.), Materials Research Society, Pittsburgh PA, pp. 505-15 (1989)

7. Brunski JB, "The Influence of Biomechanical Factors at the Bone-Biomaterial Interface," in *The Bone-Biomaterial Interface* (J.E. Davies, ed.), University of Toronto Press, Toronto, Canada, pp. 391-405 (1991)

8. Hinge KC and Brunski JB, "Teaching Computing in Context, Using the Computer as `Tool'," *Proceedings of the Ninth Annual Conference on University Programs in Computer-Aided Engineering, Design and Manufacturing (Proc. '91 UPCAEDM),* Brigham Young University, Salt Lake City, UT, pp. 66-71 (1991)

9. Brunski JB, "Prosthetic Alloys," *McGraw-Hill Encyclopedia of Science and Technology*, 7th Edition, McGraw-Hill Professional Book Group, NY, p. 404 (1992)

10. Brunski JB, "Loadings on Implants and Interfacial Stress Transfer," in *Tissue Integration in Oral, Orthopaedic and Maxillofacial Reconstruction* (W.R. Laney and D.E. Tolman, eds.), Quintessence Publishing Co., Inc., pp. 108-124 (1992)

11. Taylor J, Brunski JB, Hoshaw SJ, Cochran GVB and Higuchi KW, "Interfacial Bond Strengths of Ti-6Al-4V and HA-Coated Ti-6Al-4V Implants in Cortical Bone," in *Tissue Integration in Oral, Orthopaedic and Maxillofacial Reconstruction* (W.R. Laney and D.E. Tolman, eds.), Quintessence Publishing Co., Inc., pp. 125-132 (1992)

12. Hoshaw SJ, Brunski JB, Cochran GVB, and Higuchi KW, "Bone Modeling and Remodeling Around Control and Axially-Loaded Fixtures in Canine Tibiae," in *Tissue Integration in Oral, Orthopaedic and Maxillofacial Reconstruction* (W.R. Laney and D.E. Tolman, eds.), Quintessence Publishing Co., Inc., pp. 275-280 (1992)

13. Brunski JB, Baier RE, and Pilliar RM, "Consensus Panel Reports: Basic Science Consensus Panel," in *Tissue Integration in Oral, Orthopaedic and Maxillofacial Reconstruction* (W.R. Laney and D.E. Tolman, eds.), Quintessence Publishing Co., Inc., pp. 381-384 (1992)

14. Brunski JB and Skalak R, "Biomechanical Considerations for Osseointegrated Fixtures," in *Advanced Osseointegration Surgery: Applications in the Maxillofacial Region* (P. Worthington and P.-I. Brånemark, eds.), Quintessence Publishing Co., Inc., pp. 15-39 (1992)

15. Schmidt MB and Brunski JB, "*In Vitro* Cell Adhesion and Detachment Behavior for Various Biomaterial Substrates," in *Tissue-Inducing Biomaterials*, Materials Research Society Symposium Proceedings Vol. 252 (L.G. Cima and E.S. Ron, Eds.) Materials Research Society, Pittsburgh PA, pp. 193-198 (1992)

16. Brunski JB and Skalak R, "Biomechanics of Osseointegration and Dental Prostheses," in *Osseointegration and Oral Rehabilitation* (I. Naert, D. Van Steenberghe and P. Worthington, Eds.), Quintessence Publishing Co., Berlin, Chapter 7, pp. 133-156 (1993)

17. Brunski JB and Hoshaw SJ "Bone modeling and remodeling in relation to maintenance of attachment at bone-dental implant interfaces," in *The Biological Basis of Tooth Eruption, Resorption, and Replacement by Implants*. (Z. Davidovitch, Ed.) Harvard Society for the Advancement of Orthodontics, Boston, MA, pp. 667-680 (1994)

18. Brunski JB, "Biomechanics of Dental Implants," in *Endosseous Implants for Maxillofacial Reconstruction* (M.S. Block and J.N. Kent, Eds.) W.B. Saunders, Inc., Phila. PA, pp. 22-39, (1995)

19. Brunski JB, "Metals," in *Biomaterials Science: An Introduction to Materials in Medicine* (B.D. Ratner, A.S. Hoffman, F.J. Schoen, and Lemons, Eds.) Academic Press, Inc., NY, Chapter 2, section 2.2, pp. 37-50 (1996)

20. Brunski JB "Biomechanics of Dental Implants." in *Implants in Dentistry* (Eds. M. Block, J.N. Kent and L.R. Guerra), W.B. Saunders Co., Phila. PA, pp. 63-71 (1997).

21. Brunski JB and Skalak R, "Biomechanical Considerations for Craniofacial Implants," in O*sseointegration In Craniofacial Reconstruction* (P-I. Brånemark and D.E. Tolman, Eds.) Quintessence Publishing Co., Inc., Carol Stream, IL, Chapter 2, pp. 15-36 (1998).

22. Brunski JB and Slack JM, "Orthodontic Loading of Implants: Biomechanical Considerations", in *Orthodontic Applications of Osseointegrated Implants* (Higuchi KW, Ed.), Quintessence Publishing Co., Inc., Carol Stream, IL, Chapter 5, pp. 89-108 (2000).

23. Brunski JB, "Biomechanics of the bone-dental implant interface: *in vivo* response to loading." pp. 121-164 in *Bridging the Gap Between Dental and Orthopedic Implants*, Proceedings of the *3rd Annual Indiana Conference* (Eds. L. P. Garetto, C.H. Turner, R.L. Duncan and D.B. Burr), May 13-16, 1998, Indiana University School of Dentistry, Indianapolis IN, Indiana School of Dentistry (2002)

24. Brunski JB, "Biomechanics", Chapter 6 in *Osseointegration in Dentistry – an Overview, 2nd edition* (Eds: P. Worthington, B. Lang and J. Rubenstein), Quintessence Publishing Co., Inc., Carol Stream, IL, pp. 49-83 (2003)

25. Brunski JB, "Metals," in *Biomaterials Science: An Introduction to Materials in Medicine* Second Edition (B.D. Ratner, A.S. Hoffman, F.J. Schoen, and Lemons, Eds.) Elsevier Academic Press, London, Chapter 2, section 2.9, pp. 137-153 (2004)

26. Brunski JB, Glantz P-O., Helms J.A. and Nanci A. "Transfer of mechanical load across the interface", Chapter 10 pp. 209-249 in *The Osseointegration Book,* P-I Brånemark (editorial board S. Chien, H-G Gröndahl and K. Robinson), Quintessenz Verlags-GmbH (2005)

27. Brunski JB, Currey JA, Helms JA, Leucht P, Nanci A, and Wazen R. "The healing bone-implant interface: role of micromotion and related strain levels in tissue." Chapter 11 in *Osseointegration and Dental Implants* (Ed. Asbjorn Jokstad), Wiley-Blackwell, pp. 205-211 (2009)

28. Brunski JB, Currey JA, Helms JA, Leucht P, Nanci A, Wazen R "Implant geometry, interfacial strain, and mechanobiology of oral implants revisited", pp. 45-59 in *Proceedings of the First P-I Brånemark Scientific Symposium, Gothenburg 2009* (Eds. R. Gottlander and D. van Steenberghe), Quintessence, Surrey, Great Britain (2011).

29. Brunski JB "Biomechanical aspects of tilted regular and zygoma implants." Chapter 4, pp. 24-45 in *Zygomatic Implants: The Anatomy Guided Approach* (Ed. C. Aparicio), Quintessence, 2012.

30. Brunski JB "Biomechanical perspectives relevant to the use of mini-dental implants", Chapter 4, pp. 35-48 in *Mini Dental Implants: Principles and Practice* (Ed. Victor Sendax), Elsevier Mosby (2013)

31. Brunski JB "Metals: Basic principles", Chapter 1.2.3, pp. 111-119, in *Biomaterials Science: An Introduction to Materials in Medicine*, Third Edition (Eds. B. D. Ratner, A. S. Hoffman, F. J. Schoen, and J.E. Lemons), Elsevier Inc. (2013)

32. Brunski, JB and Goodacre, CJ "Biomechanics of the single implant", Chapter 7 in *Single Implants and Their Restoration, From Diagnosis to Maintenance* (CJ Goodacre and WP Naylor, eds.) Version 1.0, 2015, published by the Foundation for Oral Rehabilitation (FOR.org, Lucerne, Switzerland) https://www.**for**.**org**/

33. Higuchi KW and Brunski JB "From the Brånemark Novum to the Generalized Use of Immediate Implant Loading", pp. 129-134 in *Proceedings of the P-I Brånemark Memorial Symposium, Stockholm 2015* (Ed. D. van Steenberghe), Quintessence Publishing Co., Ltd., Great Britain (2016)

34. Aparicio C, Aparicio A, and Brunski JB, "Surgical–Anatomical and Prosthetic–Biomechanical ZAGA Criteria to Determine the Zygomatic Implant Trajectory" pp. 295-312 (Chapter 11) in *Graftless Solutions for the Edentulous Patient, 2nd edition* (Ed. Saj Jivraj), Springer, Switzerland (2023)

35. Brunski JB "Biomechanics of tilted implants", Chapter 2, pp. 19-38, in *Advanced Zygomatic Implants: The ZAGA Concept* (Ed. C. Aparicio), Quintessence Publishing (2024).

36. Brunski, JB, "Biomechanics of zygoma implants and bone anchorage", Chapter 4 pp. 61-90, in *Understanding Zygoma Implants: Biomechanical, Surgical, and Prosthetic Principles* by Edmond Bedrossian & E. Armand Bedrossian, Quintessence Publishing Company, Inc. Batavia IL, 2024.

37. Helms JA & Brunski JB, "From the ground up: a scientific summary of the N1 system", to appear in a book celebrating the 60 year jubilee of the first patient ever to be treated with osseointegrated implants (Eds. T. Albrektsson and B. Chrcanovic), Quintessence (2025)

PEER REVIEWED JOURNAL ARTICLES and EXTENDED (2000+ word) ABSTRACTS

1. Brunski JB, Moccia AF Jr., Pollack SR, Korostoff E and Trachtenberg DI, "The Influence of Functional Use of Endosseous Dental Implants on the Tissue-Implant Interface, Part I: Histological Aspects," *J. Dent. Res. 58*(10): 1953-1969 (1979)

2. Brunski JB, Moccia AF Jr., Pollack SR, Korostoff E and Trachtenberg DI, "The Influence of Functional Use of Endosseous Dental Implants on the Tissue-Implant Interface, Part II: Clinical Aspects," *J.Dent. Res. 58*(10): 1970-1980 (1979)

3. Brunski JB, Roth V, Reddy NP, and Cochran GVB, “Finite Element Stress Analysis of a Contact Problem Pertaining to Formation of Pressure Sores," *1980 Advances in Bioengineering* (V.C. Mow, ed.), ASME Publication, pp. 53-56 (1980)

4. Brunski JB, Reddy NP, Patel H, and Cochran GVB, "Stress Distributions in a Loaded Buttock with Various Seat Cushions," *1980 Advances in Bioengineering* (V.C. Mow, ed.), ASME Publication, pp. 97-100 (1980)

5. Brunski JB, "Methods for Measuring *In Vivo* Forces on Dental Implants During Experiments on the Biomechanics of Interface Tissue Response," *1981 Advances in Bioengineering* (D.C. Viano, ed.), ASME Publication, pp. 185-188 (1981)

6. Brunski JB, Reddy NP, Patel H, and Cochran GVB, "Model Experiments to Study the Stress Distribution in a Seated Buttock," *J. Biomechanics 15*(7): 493-504 (1982)

7. Schock RB, Brunski JB and Cochran GVB, "*In Vivo* Experiments on Pressure Sore Biomechanics: Stresses and Strains in Indented Tissues," *1982 Advances in Bioengineering* (L.E. Thibault, ed.), ASME Publication, pp. 88-91 (1982)

8. Brunski JB, Hill DC and A. Moskowitz, "Stress Analysis of a Harrington Distraction Rod and the Relationship to Fatigue Fractures *In Vivo," J. Biomechanical Eng. 105*:101-107 (1983)

9. Brunski JB and Hipp JA, "*In Vivo* Forces on Endosteal Dental Implants: A Measurement System and Biomechanical Considerations," *J. Prosth. Dent. 51*(1):82-90 (1984)

10. Brunski JB and Hipp JA, "In Vivo Forces on Dental Implants: Hard Wiring and Telemetry Methods," *J. Biomech. 17*(11):855-860 (1984)

11. Brunski JB, Hipp JA and El-Wakad M, "Dental Implant Design: Biomechanics and Interfacial Tissues," First Annual Symposium of the American Academy of Implant Dentistry Research Foundation - Forefront '85, *J. Oral Implantol. 12*(3):365-375 (1986)

12. M. Ferguson-Pell, Cochran GVB, Palmieri VR, and Brunski JB, "Development of a Modular Cushion for Spinal Cord Injured Persons," *J. Rehabilitation Research and Development 23*(3):63-76 (1986)

13. Hipp JA, Brunski JB and Cochran GVB, "Method for Histological preparation of Bone sections Containing Titanium Implants," *Stain Technology 62*(4):247-252 (1987)

14. Reddy NP, Kesavan SK, Cochran GVB, and Brunski JB, “A technique for determination of stress fields in the contact loading of highly deformable polymeric materials,”, *Polymer Engineering and Science* 27(13):979-983, 1987.

15. [Invited] Brunski JB, "Biomaterials and Biomechanics in the Design of Dental Implants," *Int. J. Oral Maxillofac. Implants 3*:85-97 (1988)

16. [Invited] Brunski JB, "Biomechanics of Oral Implants: Future Research Directions," *J. Dent. Educ. 52*(12):775-787 (1988)

17. [invited] Brunski, JB, “Biomaterials and biomechanics”, *CDA Journal*, 16(1):66-77 (1988)

18. Hoshaw SJ, Brunski JB and Cochran GVB, "Pull-Out and Fatigue Failure of Bone-Dental Implant Interfaces," *1989 Biomechanics Symposium,* AMD Vol. 98 (P.A. Torzilli and M.H. Friedman, eds.), ASME, NY, pp. 205-208 (1989)

19. Hoshaw SJ, Brunski JB, Cochran GVB and Higuchi KW, "Theories of Bone Modeling and Remodeling in Response to Mechanical Usage: Experimental Investigation of an *In Vivo* Bone-Implant Interface," in *1990 Advances in Bioengineering* (S.A. Goldstein, ed.), ASME, NY, pp. 391-394 (1990)

20. Elias JJ and Brunski JB, "Finite Element Analysis of Load Distribution Among Dental Implants," *1991 Advances in Bioengineering*, BED-Vol. 20 (R. Vanderby, Ed.) ASME, NY, pp. 155-158 (1991)

21. [Invited] Brunski JB, "Biomechanical Factors Affecting the Bone-Dental Implant Interface," *Clin. Materials 10*:153-201 (1992)

22. Elias JJ, Carollo JS, Brunski JB and HA Scarton, "Noninvasive Method for Measuring the Integrity of Implant-Tissue Interfaces," *1993 Bioengineering Conference,* BED-Vol. 24, (Eds. N.A. Langrana, M.H. Friedman and E.S. Grood) ASME, NY, pp. 327-330 (1993)

23. Skalak R, Brunski JB and M. Mendelson, "A Method for Calculating the Distribution of Vertical Forces Among Variable-Stiffness Abutments Supporting a Dental Prosthesis," *1993 Bioengineering Conference*, BED-Vol. 24, (Eds. N.A. Langrana, M.H. Friedman and E.S. Grood) ASME, NY, pp. 347-350

24. [Invited] Brunski JB and K.C. Hinge, "Introduction to Engineering Analysis: An Interdisciplinary Core Course in Statics, Linear Algebra and Computing," in the section `Focus on Curriculum', *1993 American Society of Engineering Education (ASEE) Conference Proceedings* June 1993.

25. Hoshaw SJ, Brunski JB and Cochran GVB, "Mechanical Loading of Brånemark Fixtures Affects Interfacial Bone Modeling and Remodeling," *Int. J. Oral Maxillofacial Implants 9*:347-359, 1994.

26. Brunski JB, J.B. and Hurley, E. "Implant-supported partial prostheses: biomechanical analysis of failed cases" BED-Vol. 29, *1995 Bioengineering Conference* (Eds. R.M. Hochmuth, N.A. Langrana and M.S. Hefzy), ASME, pp. 447-448, 1995.

27. Carr AB, Brunski JB and Hurley E "Effects of fabrication, finishing, and polishing procedures on preload in prostheses using conventional gold' and plastic cylinders." *Int J Oral Maxillofac Implants 11*:589-598, 1996.

28. Elias JJ, Brunski JB and Scarton HA, "A dynamic modal testing technique for non-invasive assessment of bone-dental implant interfaces" *Int. J. Oral Maxillofac Implants 11*:728-734 (1996).

29. Edwards JT, Brunski JB, and Higuchi KW, "Mechanical and morphological investigation of the tensile strength of a bone-hydroxyapatite interface." *J Biomed Mater Res 36:*454-468 (1997).

30. Boyce WE, Brunski JB, Chen MM, Craig K, Fairweather JA, Haus JW Jr., Porter JA Jr., Siegmann WL. "Interactive multimedia modules in mathematics, engineering and science." C*omputers in Physics 11*:151-156 (1997).

31. Prabhu AA and Brunski JB "Finite element analysis of a clinical case involving overload of an oral implant interface." BED-Vol. 35, *1997 Bioengineering Conference*, ASME 1997, pp. 575-576.

32. Oyola A and Brunski JB "Finite element simulation of debonding at an osseointegrated bone-dental implant interface." BED-Vol. 35, *1997 Bioengineering Conference*, ASME 1997, pp. 577-578.

33. Prabhu AA and Brunski JB "An overload failure of a dental prosthesis: a 3D finite element nonlinear contact analysis." BED-Vol. 36, *Advances in Bioengineering*, ASME 1997, pp. 141-142.

34. Rangert B, Sennerby L, Meredith N and Brunski JB "Design, maintenance and biomechanical considerations in implant placement." *Dental Update* 24(10):416-20 (1997).

35. Rangert B, Sennerby L and Brunski JB "Biologic prerequisites for fixation of titanium implants and biomechanical considerations for implant treatment planning." *Quintessence Dental Implantology* 5:19-33 (1998).

36. Brunski JB "Biomechanics and Tissue Reactions at the Bone-Dental Implant Interface – Part 3" *Quintessence Dental Implantology* 1999;6:11-24.

37. Brunski JB "*In vivo* bone response to biomechanical loading at the bone-dental implant interface." *Advances in Dental Research*, 13:99-119 (1999) (also presented at the *15th International Conference on Oral Biology*, ICOB, 'Oral Biology and Dental Implants', June 28-July 1, 1998, Baveno Italy).

38. Brunski JB, Puleo, D.A., and Nanci, A. "Biomaterials and biomechanics of oral and maxillofacial implants: current status and future developments." (invited critical review) *Int J Oral Maxillofac Implants,* 2000*;*15:15-46.

39. Ledet, E.H., Sachs, B.L., Brunski JB, Gatto, C.E., and Donzelli, P.S (2000) "Real time *in vivo* loading in the lumbar spine. Part 1: Interbody implant: load cell design and preliminary results." *Spine,* 2000;25:2595-2600.

40. Porter, J.A., Petropoulos, V. and Brunski JB (2002) Comparison of load distribution for implant overdenture attachments."*Int J Oral Maxillofac Implants*. 2002;17:651-662

41. Brunski JB (2003). "Biomechanical aspects of oral/maxillofacial implants." Int J Prosthodont 16 Suppl: 30-2; discussion 47-51.

42. Jokstad A, Braegger U, Brunski JB, Carr AB, Naert I, and Wennerberg A. (2003) "Quality of dental implants." *Int Dent Journal*, 53: 409-443. (Supplement 2, 6/03)

43. Kim DG, Brunski JB and Nicolella DP (2005) "Microstrain fields for cortical bone in uniaxial tension", *Journal of Engineering in Medicine, Part H, No.2, Volume 219,* pp. 119-128.

44. Leucht P, Kim JB, Wazen R, Nanci A, Brunski J, Helms JA. "Effect of mechanical stimuli on skeletal regeneration around implants". *Bone* 2007 Apr;40(4):919-930.

45. Leucht P, Kim JB, Currey J, Brunski J, Helms JA. (2007) FAK-mediated mechanotransduction in skeletal regeneration. *PLoS ONE* 2007 Apr 25;2:e390.

46. Colnot C, Romero D, Huang S, Rahman J, Currey J, Nanci A, Brunski JB and Helms JA (2007) "Molecular analysis of healing at a bone-implant interface" *J. Dent. Res. 86(9*):862-867.

47. Popelut A, Rooker SM, Leucht P, Medio M, Brunski JB and Helms JA "Implant osseointegration is accelerated by liposomal Wnt3a." *Biomaterials 31*:9173-9181 (2010)

48. Variola, F, Brunski, JB, Orsini, G, Tambasco de Oliveira, P, Wazen, R, and Nanci, A "Nanoscale surface modifications of medically-relevant metals: state-of-the art and perspectives." *Nanoscale* 3(2):335-53 (2011)
49. Leucht P, Monica SD, Temiyasathit S, Lenton K, Manu A, Longaker MT, Jacobs C, Spilker R, Guo, H, Brunski JB and Helms JA "Primary cilia act as mechanosensors during bone healing around an implant", *Med Eng Phys. 2012 Jul 9.* [Epub ahead of print] PMID: 22784673
50. Wazen RM, Kuroda S, Nishio C, Brunski JB, Nanci A. "Gene expression profiling by DNA microarray and histomorphometric analyses of healing bone around nanotextured implants". *Nanomedicine (Lond).* 2013 Jan 3. [Epub ahead of print] PMID: 23286527
51. Wazen RM, Currey, JA, Spilker, RL, Guo, H, Brunski, JB, Helms JA and Nanci A "Micromotion-induced strain fields influence early stages of regeneration at bone-implant interfaces", *Acta Biomaterialia* 9(5):6663-6674 (2013)
52. Mouraret S, Hunter DJ, Bardet C, Popelut A, Brunski JB, Chaussain C, Bouchard P, Helms JA. "Improving oral implant osseointegration in a murine model via Wnt signal amplification." *J Clin Periodontol.* 2014 Feb;41(2):172-80. doi: 10.1111/jcpe.12187. Epub 2013 Dec 8. [awarded 1st prize in the Europerio 2015 competition]
53. Mouraret S, Hunter DJ, Bardet C, Brunski JB, Bouchard P, Helms JA. "A pre-clinical murine model of oral implant osseointegration." *Bone* 2014 Jan;58:177-84. doi: 10.1016/j.bone.2013.07.021. Epub 2013 Jul 23, PMID: 23886841
54. Tevlin R, McArdle A, Senarath-Yapa K, Zielins ER, Atashroo D, Hu MS, Chan C, Walmsley CG, Yang J, Brunski JB, Dauskardt RH, Longaker MT. "Mechanical Properties of Fracture Callus in Diabetes using a Bicortical Femoral Fracture Model", *Journal of Surgical Research* 02/2014; 186(2):513. DOI: 10.1016/j.jss.2013.11.337
55. Li J, Johnson CA, Smith AA, Salmon B, Shi B, Brunski J, Helms JA "Disrupting the intrinsic growth potential of a suture contributes to midfacial hypoplasia." *Bone* 2015 Dec;81:186-95. doi: 10.1016/j.bone.2014.04.020. Epub 2014 Apr 26. PMID: 24780877
56. Tevlin R, McArdle A, Senarath-Yapa K, Wearda T, Duldulao C, Maan Z, Hu M, Atashroo D, Zielins E, Paik K, Brunski JB, Gurtner GC, Longaker MT. "Transcriptional Differences Exist in Diabetic Fracture Healing." *Plastic & Reconstructive Surgery* 10/2014; 134(4S-1 Suppl):61-62. DOI:10.1097/01.prs.0000455405.67788.ff
57. Tevlin R, McArdle A, Senarath-Yapa K, Rodrigues M, Maan ZN, Li S, Chan CK, Brunski JB, Gurtner GC. "Impaired Angiogenesis: A Critical Contributor to Problematic Fracture Healing in Diabetes", *Journal of the American College of Surgeons* 09/2014; 219(3):S83. DOI:10.1016/j.jamcollsurg.2014.07.196
58. Brunski, JB "Biomechanical aspects of the optimal number of implants to carry a cross-arch full restoration" *Eur J Oral Implantol* 2014;7(Suppl):S111–S132. PMID: 24977245 *[invited presentation at the meeting entitled "Consensus: Patient centered rehabilitation of edentulism with an optimal number of implants", FOR Consensus Conference, Univeristy of Mainz, GERMANY, March 27-28, 2014]*
59. Li J, Smith AA, Brunski JB, Shi B, Helms JA "Molecular mechanisms underlying skeletal growth arrest by cutaneous scarring" *Bone* 2014 Jun 14;66C:223-231. doi: 10.1016/j.bone.2014.06.007. [Epub ahead of print] PMID: 24933346
60. Haiat G, Wang H-L, and Brunski JB "Effects of biomechanical properties of the bone–implant interface on dental implant stability: From in silico approaches to the patient's mouth", *Annu. Rev. Biomed. Eng.,* 2014, 16:187–213. PMID: 24905878

61. Cha JY, Pereira MD, Smith AA, Houschyar KS, Yin X, Mouraret S, Brunski JB, and Helms JA "Multiscale analyses of bone/mini-implant interfaces", *J Dent Res* 2015 Vol. 94(3) 482-490 [Jan 27. pii: 0022034514566029, Epub ahead of print] PMID: 25628271

62. Helms JA, Brunski JB "Response to Letter to the Editor, Multiscale Analyses of the Bone-implant Interface". *J Dent Res.* 2015 Dec;94(12):1783. doi: 10.1177/0022034515603925. Epub 2015 Aug 27. No abstract available. PMID: 26316462

63. Yin X, Li J, Chen T, Mouraret S, Dhamdhere G, Brunski JB, Zou S, and Helms JA "Rescuing failed oral implants via Wnt activation", *J Clin Periodontol* 2016; 43: 180–192. PMID: 26718012

64. Li J, Johnson CA, Smith AA, Hunter DJ, Singh G, Brunski JB, and Helms JA, "Linking suckling biomechanics to the development of the palate." *Sci Rep.* 2016 Feb 4;6:20419. doi: 10.1038/srep20419. PMID: 26842915

65. Huang L, Liu B, Cha JY, Yuan G, Kelly M, Singh G, Hyman S, Brunski JB, Li J, Helms JA. "Mechanoresponsive Properties of the Periodontal Ligament". *J Dent Res.* 2016 Apr;95(4):467-75 PMID: 26767771

66. Ransom RC, Hunter DJ, Hyman S, Singh G, Ransom SC, Shen EZ, Perez KC, Gillette M, Li JT, Liu B, Brunski JB, Helms JA, "Axin2-expressing cells execute regeneration after skeletal injury." *Sci Rep.* 2016 Nov 17;6:36524. doi: 10.1038/srep36524. PMID: 27853243

67. Wang L, Wu Y, Perez KC, Hyman S, Brunski JB, Tulu U, Bao C, Salmon B, Helms JA. "Effects of Condensation on Peri-implant Bone Density and Remodeling." *J Dent Res.* 2017 Apr;96(4):413-420. doi: 10.1177/0022034516683932. Epub 2017 Jan 3. PMID: 28048963

68. Li J, Yin X, Huang L, Mouraret S, Brunski JB, Salmon B, Helms JA. "Relationship between bone quality, implant osseointegration and Wnt signaling." *J Dent Res*. 2017 Jul;96(7):822-831. doi: 10.1177/0022034517700131. Epub 2017 Mar 22.2017

69. Wang L, Aghvami M, Brunski JB, Helms JA. "Biophysical regulation of osteotomy healing: an animal study." *Clinical Implant Dentistry and Related Research*. Aug;19(4):590-599. doi: 10.1111/cid.12499. Epub 2017 Jun 13.

70. Chen CH, Pei X, Tulu US, Aghvami M, Chen CT, Gaudillière D, Arioka M, Maghazeh Moghim M, Bahat O, Kolinski M, Crosby TR, Felderhoff A, Brunski JB, Helms JA. "A Comparative Assessment of Implant Site Viability in Humans and Rats." *J Dent Res.* 2018 Apr;97(4):451-459. PMID:29202640

71. Brunski, JB "Where are we coming from?", an invited paper in a supplement of the journal entitled "On Implant Prosthodontics: One Narrative, Twelve Voices", *Int J Prosthodontics 31,* Suppl 2018, pp. S15 – S22.

72. Yuan X, Pei X, Zhao Y, Li Z, Chen CH, Tulu US, Liu B, Van Brunt LA, Brunski JB, Helms JA. "Biomechanics of Immediate Postextraction Implant Osseointegration." *J Dent Res.* 2018 Apr 1:22034518765757. doi: 10.1177/0022034518765757. [Epub ahead of print] PMID:29608868

73. Chen CH, Wang L, Serdar Tulu U, Arioka M, Moghim MM, Salmon B, Chen CT, Hoffmann W, Gilgenbach J, Brunski JB, Helms JA. "An osteopenic/osteoporotic phenotype delays alveolar bone repair." *Bone*. 2018 Apr 25;112:212-219. doi: 10.1016/j.bone.2018.04.019. [Epub ahead of print] PMID:29704698

74. Aghvami M, Brunski JB, Serdar Tulu U, Chen C, Helms JA. "A Thermal and Biological Analysis of Bone Drilling." *Journal of Biomechanical Engineering* 2018; 140(10) PMID: 30029243

75. Chen CH, Coyac BR, Arioka M, Leahy BU, Tulu S, Aghvami M, Holst S, Hoffmann W, Quarry A, Bahat O, Salmon B, Brunski JB, and Helms JA "A novel osteotomy preparation technique to preserve implant site viability and enhance osteogenesis" *J Clin Med* 2019 Feb 1;8(2). pii: E170. doi: 10.3390/jcm8020170 PMID: 30717291

76. Monje A, Ravidà A, Wang H-L, Helms J, & Brunski J (2019). "Relationship Between Primary/Mechanical and Secondary/Biological Implant Stability." *International Journal of Oral & Maxillofacial Implants, 34*, s7–s23. doi:10.11607/jomi.19suppl.g1

77. Yin X, Li J, Hoffmann W, Gasser A, Brunski JB, Helms JA. "Mechanical and Biological Advantages of a Tri-Oval Implant Design", *Journal of Clinical Medicine* 2019; 8(4). PMID: 30925746

78. Bueno R, Dias AP, Ponce KJ, Brunski JB, Nanci A. "System for application of controlled forces on dental implants in rat maxillae: Influence of the number of load cycles on bone healing." *J Biomed Mater Res. Part B*, 2019;1–11.

79. Turkkahraman H, Yuan X, Salmon B, Chen C-H, Brunski JB, and Helms JA. "Physiologic root resorption and ensuing cementum repair by a Wnt/β-catenin dependent mechanism", *American Journal of Orthodontics & Dentofacial Orthopaedics*, 2020, Jul;158(1):16-27. doi: 10.1016/j.ajodo.2019.06.021. Epub 2020 May 4. PMID: 32381434

80. Zhang X, Yuan X, Xu Q, Arioka M, Van Brunt LA, Shi Y, Brunski JB, and Helms JA. "Molecular Basis for Periodontal Ligament Adaptation to In Vivo Loading." *J Dental Research* 2019, 98(3) 331–338.

81. Xu Q, Yuan X, Zhang X, Chen J, Shi Y, Brunski JB, and Helms JA. "Mechanoadaptive Responses in the Periodontium Are Coordinated by Wnt*." J Dent Res.* 2019 Jun; 98(6): 689–697.

82. Coyac BR, Leahy B, Salvi G, Hoffmann W, Brunski JB, Helms JA. "A preclinical model links osseo-densification due to misfit and osseo-destruction due to stress/strain." *Clinical Oral Implants Research* 2019 Dec;30(12):1238-1249. doi: 10.1111/clr.13537. Epub 2019 Oct 11. PMID: 31520494

83. Coyac BR, Sun Q, Leahy B, Salvi G, Yuan X, Brunski JB, and Helms JA. "Optimizing autologous bone contribution to implant osseointegration." *J Periodontol*. 2020 Dec; 91(12): 1632–1644.

84. Li Z, Arioka M, Liu Y, Aghvami M, Tulu S, Brunski JB, Helms JA. "Effects of condensation and compressive strain on implant primary stability: A longitudinal, in vivo, multiscale study in mice." *Bone Joint Res.* 2020 May 16;9(2):60-70. doi: 10.1302/2046-3758.92.BJR-2019-0161. eCollection 2020 Feb. PMID: 32435456

85. Pilawski I, Tulu US, Ticha P, Schüpbach P, Traxler H, Xu Q, Pan J, Coyac BR, Yuan X, Tian Y, Liu Y, Chen J, Erdogan Y, Arioka M, Armaro M, Wu M, Brunski JB, Helms JA. "Interspecies Comparison of Alveolar Bone Biology, Part I: Morphology and Physiology of Pristine Bone." *JDR Clin Trans Res.* 2020 Jul 13:2380084420936979. doi: 10.1177/2380084420936979. PMID: 32660303

86. Tian Y, Li Z, Chen J, Yuan X, Sadowsky SJ, Coyac BR, Brunski JB, and Helms JA. "Mechano-adaptive Responses of Alveolar Bone to Implant Hyper-loading in a pre-clinical in vivo model." *Clin Oral Impl Res*. 2020;00:1–14.

87. Coyac BR, Leahy B, Li Z, Salvi G, Yin Xing, Brunski JB, Helms JA. "Bone formation around unstable implants is enhanced by a WNT protein therapeutic in a preclinical in vivo model." Clin Oral Implants Res. 2020; 31(11): 1125–1137.

88. Bueno R, Ponce KJ, Dias AP, Bello DG, Brunski JB, and Nanci A. "Influence of Nanotopography on Early Bone Healing during Controlled Implant Loading." *Nanomaterials (Basel)* 2020 Nov; 10(11): 2191.

89. Yuan X, Pei X, Chen J, Zhao Y, Brunski JB, and Helms JA. "Comparative analyses of the soft tissue interfaces around teeth and implants: Insights from a pre-clinical implant model." *J Clin Periodontol* 2021;00:1–9

90. Tian Y, Sadowsky S, Brunski JB, Yuan X, and Helms JA. "Effects of masticatory loading on bone remodeling around teeth vs. implants: insights from a preclinical model", *Clinical Oral Implants Research* 2022 Mar;33(3):342-352 PMID: 35051302

91. Chen J, Cuevas PL, Dworan JS, Dawid I, Turkkahraman H, Tran K, Delgado-Calle J, Bellido T, Gorski JP, Liu B, Brunski JB, Helms JA. "Wnt/β-catenin Signaling Controls Maxillofacial Hyperostosis." *J Dent Res.* 2022 Jul;101(7):793-801. doi: 10.1177/00220345211067705. Epub 2022 Feb 3. PMID: 35114849
92. Bahat O, Yin X, Holst S, Zabalegui I, Berroeta E, Pérez J, Wöhrle P, Sörgel N, Brunski J, Helms JA. "An Osteotomy Tool That Preserves Bone Viability: Evaluation in Preclinical and Clinical Settings." J Clin Med. 2022 Apr 30;11(9):2536. doi: 10.3390/jcm11092536. PMID: 35566662
93. Coyac BR, Wolf BJ, Bahat DJ, Arioka M, Brunski JB, Helms JA. "A WNT protein therapeutic accelerates consolidation of a bone graft substitute in a pre-clinical sinus augmentation model. *J Clin Periodontol.* 2022 Aug;49(8):782-798. doi: 10.1111/jcpe.13674. Epub 2022 Jun 19. PMID: 35713219
94. Bedrossian E, Brunski JB, Al-Nawas B, Kämmerer PW. "Zygoma implant under function: biomechanical principles clarified." *Int J Implant Dent.* 2023 Jun 22;9(1):15. doi: 10.1186/s40729-023-00483-1. PMID: 37347335
95. Rozov RA, Higuchi KW, Brunski JB, Trezubov VN, Smerdov AA, Mishnev ML, "3D finite element analysis of the dental implant loss effect on the stress distribution in the mandibular implant-supported prosthesis." *Russian Journal of Biomechanics*, 2023, vol. 27, no. 3, pp. 19-26.
96. Yuan X, Liu B, Cuevas P, Brunski J, Aellos F, Petersen J, Koehne T, Bröer S, Grüber R, LeBlanc A, Zhang X, Xu Q, Helms JA. "Linking the Mechanics of Chewing to Biology of the Junctional Epithelium." *J Dent Res.* 2023 Oct;102(11):1252-1260. doi: 10.1177/00220345231185288. Epub 2023 Aug 9. PMID: 37555395
97. Aellos F, Grauer JA, Harder KG, Dworan J, Fabbri G, Cuevas P, Yuan X, Liu B, Brunski JB, Helms JA. "Dynamic analyses of a soft tissue-implant interface: biological responses to immediate vs. delayed dental implants", *Journal of Clinical Periodontology* (accepted March 11, 2024).

PUBLISHED CONFERENCE PROCEEDINGS/ ABSTRACTS

1. Brunski JB, Moccia AF Jr., Pollack SR, E. Korostoff, and D. Trachtenberg, "Encapsulation and Interface Morphology of Titanium Dental Blade-vent Implants in Bone," *Proc. 2nd Annual Meeting of the Society for Biomaterials,* April 1976, p. 65.

2. Brunski JB, Moccia AF Jr., Pollack SR, E. Korostoff, and D. Trachtenberg, "Stages in Bone Repair Around Dental Blade-vent Implants," Abstract #110, AADR Meeting, *J. Dent. Res. 56* Special Issue B, 1977.

3. Yomtov B, Derman RM, Brunski JB and Cochran GVB, "A Wheelchair Ergometer Adaptable to Various Wheelchairs," *Proc. 6th Ann. N.E. Bioengineering Conf.,* pp. 97-99 (1978)

4. Brunski JB and Schock RB, "Mechanical Behavior of a Fibrous Tissue Interface of an Endosseous Dental Implant," *Trans. of the 5th Annual Meeting of the Society for Biomaterials,* April 1979, p. 41.

5. Brunski JB, "*In Vivo* Forces on Endosseous Dental Implants: Transducer Design," in *Proc. of the 1st World Biomaterials Congress*, Abstract #1.1.2, European Society for Biomaterials, April 1980.

6. Schock RB, Cochran GVB and Brunski JB, "Identification and Control of Biophysical Factors Responsible for Soft Tissue Breakdown," *Proc. of International Conference of Rehabilitation Engineering,* Toronto, Canada, 1980 (with Cochran GVB, Reddy NP and V.R. Palmieri), pp. 163-166.

7. Brunski JB, "Development of a Bite Force Transducer for Use with Endosseous Dental Implants," Proc. *9th Annual Northeast Bioengineering Conference* (Walter Welkowitz, Ed.), March 1981, pp. 33-38.

8. Schock RB, Brunski JB, and Cochran GVB, "Computer Stress Analysis of Soft Tissue Indentations Related to Formation of Pressure Sores in Pigs," *Proc. of Conference on Bioengineering and the Skin 3*(2), June 1981, Phila., PA, pp. 163-166.

9. Brunski JB, "Measurement of *In Vivo* Forces on a Dental Implant in a Beagle Dog," *Trans. 7th Annual Meeting of the Society for Biomaterials* 4, May 1981, p. 33.

10. Brunski JB, "*In Vivo* Forces on Endosseous Dental Implants: Transducers and Telemetry," Abstract #935, Annual Meeting of the American Association for Dental Research (AADR), *J. Dent. Res. 61*, March 1982, p. 282.

11. Brunski JB and Hipp JA, "An *In Vivo* Experiment to Investigate Biomechanical Requirements at the Interface of Endosseous Dental Implants," *Trans. 8th Ann. Meeting of the Society for Biomaterials V*, 1982, p. 116.

12. Brunski JB and Hill DC, "Stresses in a Harrington Distraction Rod: Their Origin and Relationship to *In Vivo* Fatigue Fractures," *Trans. 29th Orthop. Res. Soc. 7*(2):330-331 (1982)

13. Brunski JB, "Finite Element Modeling of Bone-Implant Interactions: Importance of Interface Assumptions," *Biomaterials '84 Transactions*, Proc. 2nd World Congress on Biomaterials, Wash., D.C. (J.M. Anderson, Ed.) p. 229 (1984)

14. Brunski JB, El Wakad M and Hipp JA, "Development of a System for Simultaneous Measurement of Three Force Components on Dental Implants," *Biomaterials '84 Transactions*, Proc. 2nd World Congress on Biomaterials, Wash., D.C. (J.M. Anderson, Ed.) p. 328 (1984)

15. Hipp JA, Brunski JB, M.S. Shephard and Cochran GVB, "Finite Element Models of Implants in Bone: Interfacial Assumptions," *4th Meeting of the European Society for Biomechanics*, Davos, Switzerland, p. 190 (1984)

16. Brunski JB, Schock RB, and Cochran GVB, "Pressure Sores: Biomechanics of Indented Tissues", *37th ACEMB* p. 181 (1984)

17. Wenz J, Berthoud C, El Wakad M, Hipp JA and Brunski JB, "An `Osseointegrated' Dental Implant Instrumented to Sense *In Vivo* Forces," Abstract #1215, 1986 AADR Meeting, *J. Dent. Res. 65*:304 (1986)

18. Brunski JB and El Wakad M, "Measurements of Three Force Components on Dental Implants in Dogs," Abstract #237, 1986 AADR Meeting, *J. Dent. Res. 65*:196 (1986)

19. Brunski JB, Hipp JA, Cochran GVB and R.W. Higuchi, "Investigation of Osseointegration by Histomorphometric Analyses of Fixture-Bone Interfaces," Abstract #637, AADR Meeting, March 1987, Chicago, IL, *J. Dent. Res. 66*:186 1987.

20. Brunski JB, Hipp JA and Cochran GVB, "Histomorphometry of Osseointegrated-Type Interfaces Subjected to Different *In Vivo* Loading Protocols," *Trans. 13th Ann. Meeting. of the Society for Biomaterials*, NY, June 2-6, 1987, p. 48.

21. Brunski JB, Hipp JA and Cochran GVB, "Osseointegrated Interfaces - Biomechanical Testing and Histological Testing," *Proc. 40th ACEMB 1987*, p. 192

22. Brunski JB and M.T. El Wakad, "Biomechanics of Dental Implants With and Without `Intramobile Elements': Computer Modeling," Abstract #1693, IADR Meeting, March 1988, Montreal, Canada*, J. Dent. Res. 67*:287 (1988)

23. Hoshaw SJ and Brunski JB, "Mechanical Testing of Dental Implants With and Without `Intramobile Elements'" Abstract #1612, 1988 IADR Meeting, March 1988, Montreal, Canada, *J. Dent. Res. 67*:314.

24. Gold Jand Brunski JB, "Surface Characterization of Dental Implants and Titanium-Coated Cell Culture Coverslips," Abstract #2168, 1988 IADR Meeting, March 1988, Montreal, Canada, *J. Dent. Res. 67*:384.

25. Gold J and Brunski JB, "Surface Characterization of Ti-Coated Coverslips for Use in Cell Adhesion Study: A Comparison with Titanium Dental Implant Surfaces," Paper #4P-35, p. 397, *Transactions of the 3rd World Biomaterials Congress*, April 21-25, 1988, Kyoto, Japan.

26. Hoshaw SJ and Brunski JB, "Pull-out Strength and Fatigue Failure of Fixture-Bone Interfaces," Abstract #586, *J. Dent. Res. 68*:254 (1988)

27. Deutsch J and Brunski JB, "Numerical Analysis of Load Distribution Among Dental Implants," Abstract #587, *J. Dent. Res. 68*:255 (1989)

28. Brunski JB, "Safe and Effective Dental Implants: Criteria for Pre-Market Approval," Abstract #541, *J. Dent. Res. 68*:179 (1989)

29. Rangert B and Brunski JB, "Comparison of Methods for Calculating Loading Components On Oral Implants Supporting Prosthetic Bridgework," *Abstracts of the First World Congress of Biomechanics*, Vol. II, p. 141, U. of Calif. at San Diego, 1990.

30. [Invited] Brunski JB and Elias JJ, "Axial Forces on Dental Implants Supporting Bridgework: Comparisons Between Experimental Results and Predictions Via Analytical and Finite Element Models," *Proceedings of the Third USA-China-Japan Conference on Biomechanics,* Georgia Tech., Atlanta GA, pp. 76-77 (1991)

31. Brunski JB, Edwards JT, Cochran GVB, and Higuchi KW, "Tensile Tests of Interfaces Comprised of Bone-Titanium and Bone-Hydroxyapatite-Coated Titanium," *Trans. 37th Orthop. Res. Soc. 16*:502 (1991)

32. Mendelson M, Ng A and Brunski JB, "Force Distribution Among Dental Implants: Measurements From Laboratory Models," Abstract #1553, *J. Dent. Res. 70*:460 (1991)

33. Elias JJ and Brunski JB, "3-D Finite Element Analysis of Loads on Dental Implants," Abstract #1552, *J. Dent. Res. 70*:460 (1991)

34. Hoshaw SJ, Goble JC, Brunski JB and Cochran GVB, "Bone-Implant Interfaces: Analysis With Backscattered SEM and Optimum Thresholding," Abstract #1775, *J. Dent. Res. 70*:488 (1991)

35. Brunski JB, Elias JJ, Edwards JT, and Cochran GVB, "Tensile Bonding at Bone-Biomaterial interfaces: An *In Vivo* Test and Related Finite Element Analysis," *Trans. 17th Annual Meeting of the Soc. for Biomat*. p. 15 (1991)

36. Schmidt MB and Brunski JB, "*In Vitro* Cell-Biomaterial Interactions for Three Common Dental Implant Materials," Abstract #*627 J. Dent. Res. 71*:184 (1992)

37. Hoshaw SJ, Brunski JB and Cochran GVB, "Theories of Bone Modeling/Remodeling Applied to Loaded Dental Implants," Abstract #1197, *J. Dent. Res. 71*:255 (1992)

38. Elias JJ, Carollo JP, Scarton HA, and Brunski JB, "Comparison of Shock Absorption of Brånemark and IMZ Implants," Abstract #75*, J. Dent. Res. 71*:115 (1992)

39. Elias JJ, Brunski JB and Scarton HA, "Noninvasive Method for Measuring the Integrity of Implant-Tissue Interfaces," Abstract #105*, J. Dent. Res. 72*:528 (1992)

40. Uhl R, Craige Williamson S, Clark D, and Brunski JB, "A Comparison Study of Carpal Suture Anchoring Techniques," Paper #26, *Final Program of the Twenty-Second Annual Meeting of the American Association for Hand Surgery*, Washington D. C., Sept. 17-19 (1992)

41. Elias JJ, Carollo JP, Scarton HA, and Brunski JB, "Shock Absorption Behavior of Oral Implants and Interfaces Under Axial Impulse Loading *In Vitro*," *Trans. 4th World Biomaterials Congress*, Berlin, p. 382 (1992)

42. Schmidt MB and Brunski JB, "Estimating Cell Attachment Strength in Shear Flow Studies: A Method based on Unsheared Cell Area Distributions," *Annual Meeting of the Biomed. Eng. Soc.,* Salt Lake City UT, Abstract #G3.2

43. Elias JJ, Brunski JB and H.A. Scarton, "Noninvasive Assessment of the Interface Surrounding a Dental Implant," Abstract #1462*, J. Dent. Res. 72*:286 (1993)

44. Carollo JP, Elias JJ, Brunski JB and H.A. Scarton, "A Noninvasive Method for Assessing Bone-Dental Implant Interfaces: Detection of Interfacial Cortical Vs. Trabecular Bone *In Vitro*," *Trans. 19th Meeting of the Soc. for Biomaterials*, p. 158 (1993)

45. Brunski JB, "Tissue damage due to stresses and strains at the bone-dental implant interface" pp. 88-93 in *Biomaterials: Cellular Responses to Implanted Materials*, Report No. 94-29 of the Institute for Mechanics and Materials, R. Skalak and S. Chien Co-Chairs, Univ. of Calif. at San Diego, 1994.

46. Carr AB, Master J, and Brunski JB, "Preload in specimens produced from plastic and as-received cylinders" Abstract #1117, *J Dent Res 74* (Abstracts): 151, 1995.

47. Edwards JT and Brunski JB, "An investigation of the bone-HA interface using scanning electron microscopy" *Trans 41st Orthopaedic Research Society*, Feb. 13-16, 1995, p. 144.

48. Brunski JB, Evaul G, Smerek J, Gigalonis-Vacario J, and Wolfinger G, "Biomechanics of overdentures attached to frameworks by different methods", Abstract #1326, *J Dent Res 75* (Abstracts):183, 1996.

49. Daellenbach K, Hurley E, Brunski JB and Rangert B, "Biomechanics of in-line vs. offset implants supporting a partial prosthesis", Abstract #1327, *Dent Res 75* (Abstracts):183, 1996.

50. Prabhu A and Brunski JB "Effect of bone and implant stiffness", Abstract #478, *J Dent Res 75*:77, 1996.

51. Daellenbach K, Hurley E, Rangert B, and Brunski JB, "Force and moment distribution among three abutments: staggered vs. in-line arrangement", pp. 57-58, *Proc. 11th Annual Meeting of the Academy of Osseointegration* (Feb. 29-Mar. 2, 1996), New York City.

52. Corso M, Fiorellini J, Sirota C, Rasool F, Brunski JB, Szmukler-Moncler S, Lee D, Weber HP, "Clinical and histometric analysis of osseointegration of immediately loaded implants in dogs." *J Dent Res*. 1997;76:24 (Abstract #87).

53. Smerek J, Brunski JB, Wolfinger G, Winkelman R, and Balshi T, "Implant loading with all-acrylic vs. metal-supported-acrylic prostheses." *J Dent Res* 1997;*76*:263 (Abstract #1996).

54. Prabhu A and Brunski JB, "Strain fields around a loaded implant and neighboring unloaded implant." *J Dent Res* 1997;*76*:328 (Abstract # 2519).

55. Brunski JB and Yang C-J, "Finite element simulation of damage-induced bone remodeling at a bone-implant interface." *Trans 44th Orthop. Res. Soc*., March 16-19, 1998, New Orleans LA, p. 341.

56. Liu C and Brunski JB, "Mobility of standard vs. newly-designed experimental Brånemark fixtures." Presented at the Annual Meeting of the Academy of Osseointegration, Palm Springs CA, March 4, 1999.

57. Liu C and Brunski JB, "Axial and lateral mobility of standard vs. experimental Brånemark fixtures." J Dent Res 1999; 78:246 (Abstract #1123), IADR meeting, Vancouver BC, March 10-13, 1999.

58. Brunski JB, Kim DG, Rubin M, LeGeros RZ, and Pan PC, "Measurement of tensile bond strength between calculus and tooth surfaces", *J Dent Res* 2000;79:258 (Abstract #914).

59. Petropoulos VC, Porter JA, and Brunski JB, "Load distribution of various attachments on implant retained overdentures", *J Dent Res* 2000;79:258 (Abstract #1231).

60. Ledet EH, Gatto CA, Brunski JB, Donzelli P, McVoy JL, and Sachs BL, "Real time *in vivo* loading in the lumbar spine using an interbody implant load cell", *Trans 46th Orthop. Res. Soc*., March 12-15, 2000.

61. Brunski JB and Kim DG, "Early loading of a bone-implant interface: finite element analysis of damage-induced remodeling." Abstract #523, *Trans 46th Orthop. Res. Soc*., March 12-15, 2000.

62. Porter JA Jr, Brunski JB, Balshi T, Wolfinger G, and Winkelman R "In vivo axial forces and bending moments during jaw opening." Poster P-25 at the *16th Annual Meeting of the Academy of Osseointegration*, March 22-24, 2001, Toronto, CA (p. 61 in the program proceedings).

63. Kim DG, Brunski JB, and Nicolella, DP, "Microstructural-level strain fields during a microtensile test of bone and at a bone-implant interface." pp. 289-290 in *2001 Bioengineering Conference*, BED-Vol. 50, (R.D. Kam et al., eds.) ASME, NY

64. Vashishth D, George W, Guo Y, Brunski JB, and Ostrander L, "Hands-on approach to biomedical engineering education." Abstract #37251 at the *2001 Annual Meeting of the Biomedical Engineering Society*, Fall 2001.

65. Vashishth D, George W, Smith J, Brunski JB and Ostrander LE, "Hands-on approaches to biomechanics education in a technologically connected classroom." *BED-Vol. 51, Advances in Bioengineering*, American Society of Mechanical Engineers (ASME) 2001, pp. 1-2.

66. Kim DG and Brunski JB, "A composite model of human cortical bone based on transverse isotropy." Abstract 544, *48th Annual Meeting of the Orthopaedic Research Society*, Dallas TX, Feb. 2002.

67. Porter JA, Brunski JB, Wolfinger G, Balshi T, and Winkelman R, "In vivo loading on implants: theory vs. experiments." Abstract #1370, *80th Session of the International Association for Dental Research (IADR),* San Diego CA, March 2002, *J Dent Res 81 (Spec Iss A)*: A-187, 2002.

68. Brunski JB, Kim DG, Prabhu A, and Yang C-J, "Biomechanical modeling of overload at the bone-oral implant interface." *4th World Congress of Biomechanics*, Aug. 4-8 2002, Calgary, Canada.

69. Huang S, Colnot C, Lu C, Brunski JB, and Helms JA, "Molecular and cellular analysis of bone-implant interfaces." Poster #1371, *49th Annual Meeting of the Orthopaedic Research Society*, Feb. 2-5, 2003, New Orleans, LA.

70. Brunski JB, Kim DG, Rubin M, LeGeros RZ, and Pan PC, "Zn-containing mouthrinse affects calculus-dentin attachment strength" Abstract #0499, *32nd Annual Meeting of the American Association for Dental Research* (AADR), San Antonio TX, March 12-15, 2003.

71. Brunski JB, Duyck JA, Vanasse T, White N, Doshi M, "In Vivo Axial Forces on Implants: Theory vs. Experiment" Abstract 91, IADR/AADR/CADR 82nd General Session (March 10-13, 2004) Honolulu, HI.

72. Currey JA, Leucht P, J-B. Kim, Brunski JB, Helms JA, Nanci A, and Nicolella D. "A new mouse model for studying mechanobiology at the healing bone-implant interface." *First International Conference on Mechanics of Biomaterials & Tissues*, abstract 037, Wiakoloa, Hawaii, Dec. 11-15, 2005.

73. Leucht P, Kim J-B, Currey JA, Brunski JB, Helms JA, "Molecular and cellular characterization of the in vivo response associated with loaded and unloaded implants", abstract #1206, 52nd *Orthopaedic Research Society Meeting*, Chicago, IL March 2006

74. Currey JA, Leucht P, Kim J-B, Helms JA, Nanci A, and Brunski JB, "Mechanobiology of healing bone-implant interfaces: Implant micromotion system for a mouse model", abstract #1693, *52nd Orthopaedic Research Society Meeting*, Chicago, IL March 2006

75. Currey JA, Leucht P, Vercnocke A, Hansen D, Nicolella D, and Brunski JB, "A micro-CT based system for determining strain fields at a bone-implant interface in the mouse tibia." abstract #1708, *52nd Orthopaedic Research Society Meeting*, Chicago, IL March 2006

76. Currey JA, Nicolella D, and Brunski JB "Characterization of the mechanical environment at an implant interface: an in vitro study", *2006 Summer Bioengineering Conference (Proceedings of BIO2006)*, June 21-25 2006, Amelia Island Plantation, Amelia Island, FL. ISBN: 0-7918-3773-4 [podium presentation by Jenn Currey placed 2nd in the doctoral student competition at the conference]

77. Brunski JB, Currey J, Helms JA. Leucht P, Nanci A, Nicolella D, and Wazen R, "Mechanobiology at healing bone-implant interfaces: strain distribution and tissue response", podium presentation, *5th World Congress of Biomechanics*, Munich Germany, August 2006.

78. Leucht P, Kim J-B, Brunski, JB, and Helms JA "Skeletal regeneration is cooperatively regulated by mechanical forces and molecular signals." Paper # 119, *53rd Annual Orthopaedic Research Meeting*, Feb. 11-14, 2007, (Podium presentation)

79. D'Anjou C, Currey J, Wazen R, Nanci A, Leucht P, Helms JA, and Brunski JB "Stiffness of the bone-implant interface as an indicator of bone healing", Poster #951, *53rd Annual Orthopaedic Research Meeting*, Feb. 11-14, 2007

80. Currey JA, D'Anjou C, Leucht P, Wazen R, Helms JA, Nanci A., and Brunski JB "Determination of *in vivo* mechanical properties of healing interfacial tissue at an implant site in bone." *2nd International Conference on Mechanics of Biomaterials & Tissues*, abstract 039, Lihue, Kaua'I, Hawaii, Dec. 9-13, 2007.

81. Brunski JB, Leucht P, Dietrich H, Currey JA, Wazen R, Nanci A, Helms JA "Interfacial Strain Fields from Implant Micromotion Influence Early Events during Bone Regeneration", Poster #1866, *54th Annual Orthopaedic Research Meeting*, March 1-4, 2007.

82. Guo H, Spilker RL, and Brunski JB "Modeling the Strain Fields for an In-vivo Bone Growth Experiment", *Proceedings of the 2010 IEEE 36th Annual Northeast Bioengineering Conference",* Columbia University, NYC NY

83. Wazen RM, Brunski JB, Currey JA, Helms JA, Leucht P, Nanci A. "Interfacial tissue response is influenced by local strain created during implant micromotion". *European Calcified Tissue Society*, Glasgow, Scotland, June 26th-30th, 2010.

84. Wazen R, Nishio C, Kuroda S, Brunski JB and Nanci A "Gene expression profiling by DNA microarray and histomorphometric analyses of healing bone around nanotextured implants" Poster #1311, *2011 Annual Meeting of the Orthopaedic Research Society*, Jan. 13-16, 2011.

85. Leucht P, Monica S, Jiang J, Jacobs CR, Spilker RL, Brunski JB and Helms JA "Primary cilia act as mechanosensors during bone healing around an implant" Poster #518, *2012 Annual Meeting of the Orthopaedic Research Society,* ISSN 0149-6433, February 4-7, 2012, San Francisco CA

86. Johnson CA, Li J, Smith AA, Brunski JB and Helms JA "Midfacial Growth and Surgically Induced Growth Arrest", *Plastic Surgery 2014*, Abstract Supplement, p. 20

87. Wazen RM, Brunski JB, Helms JA, Nanci A. "Loading Regimen Differentially Modulates Gene Expression Around Implants", Invited Oral, *6th International Conference on Mechanics of Biomaterials and Tissues*, December 6th-10th, 2015, Waikoloa, Hawaii.

INVITED DISCUSSION OF PAPERS

Brunski JB, in *J. Oral Maxillofac. Surg. 50*:716-717 (1992): Discussion of "A Light and Electron Microscopic Comparison of Osseointegration of Six Implant Types," by A.L. Zisk, D.E. Steflik, G.R. Parr and P.J. Hanes, *J. Oral Maxillofac. Surg. 50*:709-716 (1992)

Brunski JB, in *J. Oral Maxillofac. Surg*. 1999;57:706-708: Discussion of "Mechanical Properties of Trabecular Bone in the Human Mandible: Implications for Dental Implant Treatment Planning and Surgical Placement." by C. E. Misch, Z. Qu and M.W. Bidez, *J. Oral Maxillofac Surg*

EDITORIALS

1. Brunski JB, "Dental Implants and the Great Vortex of Dentistry," *Int J Oral & Maxillofacial Implants 7*(3):295-6 (1992).

2. Brunski JB, "Biomechanik und Suprakonstrucktionen in der Implantologie", *Phillip Journal* 6/95, p. 265.

3. Brunski JB, “Biomaterials and Medical Implant Science” *Int J Oral Maxillofac Implants*, Vol. 10, No. 6, pp. 649-650 (1995).

4. Brunski JB, “A Tribute to Richard Skalak”, *Int J Oral Maxillofac Implants*, Vol. 12, No. 6, pp. 727-728, (1997).

5. Brunski JB, “The New Millennium in Biomaterials and Biomechanics”, *Int J Oral Maxillofac Implants*, Vol. 15, No.3, pp. 327-328, 2000.

6. Brunski JB, Nanci A and J. Helms, “Implant stability and the bone-implant interface”, *Applied Osseointegration Research* Vol. 2 No. 1, December 2001, pp. 3-5.

7. Brunski JB, “Are dental implants stronger than natural teeth?” *Int J Oral Maxillofac Implants*, Vol. 19, No. 6, pp. 801-802, (2004).

8. Albrektsson T, Brunski JB and A. Wennerberg. “ ‘A requiem for the periodontal ligament’ revisited”. *Int J Prosthodontics 22*(2):120-122 (2009).

NON-REFEREED PUBLICATIONS

1. Brunski JB, "Avoiding Pitfalls of Overloading and Micromotion of Intraosseous Implants," *Dental Implantology Update*:77-81, October 1993

2. Brunski JB, "Building Foundations for Dreams," prepared for "The Last Word", a opinion column in *Rensselaer*, Dec. 1992, p. 48. (This accompanied a cover story about one of Prof. Brunski's former students, Dr. David E. Altobelli, B.S. '78, D.M.D., M.D., Harvard)

3. Rangert B, “Laboratory research at Rensselaer bodes well for clinical progress” *Nobel Biocare Global Forum* Vol. 10, No. 2, pp. 6-7, 1996. (This article described ongoing research by J. Brunski and his students.)

4. Brunski JB "Micromotion and Dental Implants: A research update in two parts – with thought-provoking consequences for longevity", *Nobel Biocare News*, Issue 1, 2012, p. 14, continued in Issue 2: “Biological Consequences of Micromotion and Interfacial Strain” -- also see http://newsletter.nobelbiocare.com/

RESEARCH FUNDING -- last ~40 years

1. "Determination of the Effects of Implant Interface Mechanics on Bone Remodeling", Co-Principal Investigators Brunski JB (Rensselaer) and Cochran GVB (Helen Hayes Hospital) $132,000 (direct plus indirect) subcontract to RPI from Veterans Administration, Washington, DC, through Castle Point NY Veterans Administration Hospital, Castle Point NY, 1/1/87 - 12/31/90

2. “A Training Program in Dental Materials”, Principal Investigator Brunski JB, approx. $150,000/yr for 16 years through Summer 1992, NIH grant # 2 T32 DE07054 (JBB assumed the PI role when Professor J.L. Katz left Rensselaer in the mid-eighties).

3. "A New Program in Biochemistry and Biophysics " Principal Investigators: S. Wait, B. Wallace, J. Koretz et al. (Biology), from Howard Hughes Medical Foundation 1989 – 1994 (approx. $1,000,000 total award to Wait et al.): approx. $15,000 to Brunski

4. "Railroad Switch Stand Development", Principal Investigator Larry Ruff (Center for Manufacturing Productivity and Technology Transfer), Senior Investigator Brunski JB, $52,000 from Union Pacific Railroad, Omaha, Nebraska, May 1989 - October 1989.

5. "Undergraduate Engineering Design Initiative", Principal Investigators: J.L. Katz (through 1989) Brunski JB (1989-1994), Other Senior Investigators D.R. Gisser, J.C. Newell, L.E. Ostrander, $10,000/year from National Science Foundation, 6/1/88-11/30/94

6. "Curriculum Development: Statics and Linear Algebra", Co-Principal Investigators: Brunski JB and D. Lagoudas, Senior Investigators Kathleen C. Hinge, $10,000 from Rensselaer's Center for Innovation in Undergraduate Education, Summer 1991 – Spring 1992.

7. "Undergraduate Course Development in Engineering: Mechanics and Linear Algebra", Principal Investigators: Brunski JB and D. Lagoudas, $75,000 from National Science Foundation, 6/1/92-11/30/93.

8. "Strategic Initiatives Funding: Intro to Engineering Analysis (Studio Version)", Principal Investigator: Brunski JB, Senior Investigators R.L. Spilker, $15,000 from Rensselaer's Strategic Initiatives Funding, 9/16/93-9/15/94.

9. "Research on Dental Implants," Principal Investigator: J. Brunski, $48,740 from Nobel Biocare AB, Göteborg, Sweden, 1994-1996.

10. "Mathematics and its Applications in Engineering and Science: Building the Links," Co-Principal Investigators: W. Boyce, J. Brunski and J. Wilson, Investigator Brunski JB, DUE-9451274, $49,433, Summer 1995 (Planning grant leading to a successful major award in Fall 1995, see 11, below).

11. "Mathematics and Its Applications in Engineering and Science: Building the Links," Principal Investigators: W. Boyce and R. Spilker. J. Brunski was one of five group leaders in the project, $4,000,000 for 5 years, starting 1995.

12. "Research on Dental Implants" Principal Investigator: Brunski JB, $31,500 from Spokane Center for Tissue Integrated Reconstruction, Fall '93 – present.

13. "GTE and Rensselaer Polytechnic Institute - A Partnership," Co-Principal Investigators: J. Brunski, J. Modestino, $400,000 total, Fall 1995-Fall 2000, $49,000/year to J. Brunski, GTE Foundation. (The project is for work on a wireless distribution network, plus a studio/laptop-computer version of 20.1100 Introduction to Engineering Analysis.)

14. "Delivering Diversity Efficiently," Co-Principal Investigators: J.C. Newell and J. Brunski, Strategic Initiatives funding $28,000, June 1996-May 1997. (The project developed web-based modules and related materials for use in Core Engineering courses and modified BME courses in the new 4 x 4 curriculum.)

15. "Measurement of loading in the lumbar spine: a novel approach using an intradiscal implant in a baboon", B.L. Sachs, Brunski JB, R.L. Uhl, E. Krempl (Co-PIs), North American Spine Society, $49,992 (direct + indirect costs, awarded to Albany Medical College), 1997-98

16. "A Faculty Workshop on the Use of Laptop Computers in 1st-Year Courses", J. Brunski and J. Kolb, Co-PIs, Strategic Initiatives Funding $250,000, 1999-2000.

17. "Micro-tensile test to assess bonding of dental calculus to tooth surfaces", Brunski JB, Pfizer (Warner-Lambert Inc.), Morristown, NJ, $40,000 (direct costs), 2000-2002.

18. "Mechanobiology at healing bone-implant interfaces." Research Revitalization Grant, $28,307 direct costs, awarded by the Provost's Office, Rensselaer Polytechnic Institute, Fall 2001.

19. "Molecular level mechanisms of mesenchymal stem cell responses to select mechanical stimuli" Investigators: Deepak Vashishth, Ph.D., Rena Bizios, Ph.D., John B. Brunski, Ph.D., $37,000 seed funding from Provost's fund competition, Rensselaer Polytechnic Institute, Dec. 2003-Nov. 2004

20. "Mechanobiology at Healing Bone-Implant Interfaces", NIH National Institute for Biomedical Imaging and Bioengineering NIBIB R01 EB000504-01A1, 7/1/03 – 4/30/08, $1.8 M direct and indirect costs, Multiple PIs: JB Brunski (contact PI), JA Helms, and Nanci A

21. "Mechanobiology at healing bone-implant interfaces." NIH National Institute for Biomedical Imaging and Bioengineering NIBIB 2R01 EB 000504, (renewal of grant listed as 20, above) 7/1/08 thru 6/30/12, $2.4 M direct and indirect costs, multiple PIs: Brunski JB, Helms JA, and Nanci A

22. "Biophysical control of adult stem cell fate", Stanford University Bio-X program, Fall 2010-Fall 2012, approx. $135,000, Helms JA PI, Brunski JB and S. Heilshorn co-investigators.

23. "Mechanobiology at healing bone-implant interfaces" (Renewal of #21 above) -- NIH National Institute for Biomedical Imaging and Bioengineering, Helms JA, Brunski JB (contact PI), and Nanci A, July 1, 2014 – June 30, 2019, scored at 5th percentile, priority score 20, 9R01DE024000-12A1

PROFESSIONAL AND PUBLIC LECTURES

1. "Plastics in the Field of Biomaterials and Biomedical Engineering," lecture to the Hudson/Mohawk Section of the Society of Plastics Engineers, Saratoga Springs, NY, November 12, 1980.

2. "Engineering in the Design of Dental Implants," guest lecture to approximately 700 Eng. I students, Spring 1979, 1980.

3. "Engineering and Dental Implants," lecture at New York University Dental Center and Department of Dental Materials Science, May 1980.

4. "Lecture and Laboratory Courses in Biomaterials and Biomechanics at Rensselaer Polytechnic Institute," American Society for Engineering Education, Annual Meeting, Texas A & M, June 22, 1982.

5. "The Implant-Tissue Interface and Measurements of in vivo Forces on Dental Implants," lecture at Department of Bioengineering, University of Pennsylvania, October 12, 1982.

6. "Improved Seating for Pressure Sore Prevention," lecture at Technology Transfer: A Team Approach in Rehabilitation, a workshop sponsored by RPI and Helen Hayes Hospital Research and Training Center, at RPI and Helen Hayes Hospital, November 30 and December 8, 1982.

7. "Biomechanics and Dental Implants," Department of Prosthodontics, Dental School, University of Toronto, May 24, 1986.

8. "Forces on Dental Implants and Interfacial Tissue Response," Alabama Implant Study Group, Alabama Implant Congress XII, 1986, May 1-4.

9. "Biomechanical Variables Affecting the Implant Tissue Interface," Implantology Today, Columbia University School of Dental and Oral Surgery, May 30-31, 1986.

10. "Forces on Dental Implants and the Biology of the Implant/Tissue Interface," April 6, 1987 at a Symposium entitled Dental Implant Research: Current Status and Future Directions, University of North Carolina at Chapel Hill, School of Dentistry.

11. "Biomechanical Testing and Histological Evaluation of 'Osseointegrated' Systems," April 10-12, 1987 at Symposium III Dental Implant Research, American Academy of Implant Dentistry Research Foundation, Forsythe Dental Center, Boston, MA.

12. "Biomechanics of Dental Implants and Interfacial Tissues," presented to Technical/Management Staff of Noblepharma AB, Gothenburg, Sweden, August 17, 1987.

13. "Quantification of Osseointegrated Bone/Implant Interfaces," presented to dental school faculty and staff at the Brånemark Clinic, Dental School, University of Gothenburg, Gothenburg, Sweden, August 19, 1987.

14. "Biomechanics of Dental Implants and Interfacial Tissues," presented at Annual Meeting of the American College of Prosthodontists, October 10, 1987, San Diego, CA.

15. "Biomechanics of Dental Implants and Interfacial Tissues," at Loma Linda School of Dentistry, Department of Oral Implantology, October 12, 1987.

16. "Biomechanics of Dental Implants and Interfacial Tissues," at Dental School of the Medical College of Georgia, October 22, 1987.

17. "Biomechanics of Dental Implants," NYU Dental School, to third-year dental students, as part of a one-semester lecture series on dental implants (once per year as part of a program, 1987-present).

18. "Histomorphological Nature of Osseointegration under Different States of Loading *In Vivo*," at 3rd Annual Meeting of the Academy of Osseointegration, March 4-5, 1988, Marriott Park Central Hotel, Dallas, TX.

19. "Bioengineering Aspects of Dental Implants," lecture to Albany- Schenectady-Troy, NY, Dental Implant Study Group, March 22, 1988, Albany, NY.

20. "Bioengineering Critique of the FDA's Draft Guidance on Endosseous Dental Implants," FDA Meeting, Rockville, MD, December 16, 1988.

21. "Current Investigations into the Nature of the `Osseointegrated' Dental Implant-Tissue Interface," invited seminar to the Faculty of Dentistry, University of Toronto, January 12, 1989.

22. "Wound Healing at an Implantation Site: Biomaterial and Biomechanical Factors," invited seminar as part of a continuing education program entitled "Surgical and Restorative Techniques for the Brånemark Course" at the School of Dental Medicine, University of Pennsylvania, Philadelphia, PA, January 26, 1989.

23. "Current Research on Dental Implant Biomaterials and Biomechanics," invited seminar as part of a continuing education program entitled "Maxi-Course In Oral Implantology" at Brookdale Hospital Medical Center, February 3, 1989, Brooklyn, NY.

24. "Biomaterials and Biomechanics in Dental Implant Design," invited seminar at the Southwest Institute of Dental Implantology, Inc., May 18, 1989, Houston, TX.

25. "Biomechanics of Implant Design," invited seminar at the 1989 Core-Vent Symposium, May 19, 1989, Washington, DC.

26. "Biomechanics and Bone Remodeling Around Dental Implants," invited presentation at the 1989 Sun Valley Hard Tissue Workshop, August 6-11, 1989, Sun Valley, ID.

27. "Wound Healing at an Implantation Site: Biomaterial and Biomechanical Factors," presented at a continuing education course entitled "Surgical and Restorative Techniques for the Brånemark System," September 8, 1989, Allegheny General Hospital, Pittsburgh, PA.

28. "Biomechanics and Biomaterials in Implant Design," presented at the First International Congress of the Dutch Society for Oral Implantology, Amsterdam, The Netherlands, September 9, 1989.

29. "Recent Research on Bone Development at the Interface of Titanium Dental Implants," Seminar at the Physics Department, Chalmers Institute of Technology, Gothenburg, Sweden, September 11, 1989.

30. "Biomechanical Principles Underlying Use of Dental Implants," continuing education course, Harvard School of Dental Medicine, September 20, 1989.

31. "Dental Implant Biomechanics: Questions to be Answered," presented at World Congress IX of the International College of Oral Implantologists, October 27, 1989.

32. "Biomechanical Failures at the Bone-Implant Interface," Osseointegrated Oral Prostheses, (An International Conference On Problems, Complications and Failures and Their Prevention, Handling and Treatment), November 1-2, 1990, Malmö, Sweden.

33. "Responses of Osseointegrated Interfaces to Loading: Modeling and Remodeling in Relation to Mechanical Usage." Annual Meeting of the Academy of Osseointegration, Boston MA, March 1, 1991.

34. "State of the Science underlying Dental Implant Design," American Academy of Implant Dentistry Research Foundation, Washington DC, April 26-27, 1991.

35. "Intro to Engineering Analysis," IBM Academic Information Systems (ACIS) Conference, July 11-13, 1991. (with K.C. Hinge)

36. "High-End Workstation Tools in Engineering Education: Linking Mathematics, Design and Communication," at EDUCOM '91, San Diego CA, October 1991. (with C. Geisler, K. Hinge and E. Rogers)

37. "Does Biomechanical Loading Influence Interfacial Bone Response Around Brånemark Fixtures?" 4th Annual Reunion Group Meeting on Tissue-Integrated Reconstruction, Spokane Center for Tissue-Integrated Reconstruction (Spokane WA) and The Institute for Applied Biotechnology (Gothenburg Sweden), Coeur d'Alene Idaho, October 17-19, 1991.

38. "Loaded and Control Brånemark Fixtures: Biomechanics and Bone Physiology at the Interface," Dutch Society for Oral Implantology, Amsterdam, The Netherlands, November 9-11, 1991.

39. "How Are Biomechanical Factors Involved in the Success and Failure of Dental Implants?" 37th Scientific Meeting of the Greater New York Academy of Prosthodontics, New York City, December 6, 1991.

40. "Biomechanics and Occlusal Concepts Related to Implant-Supported Restoration," 2nd Annual New York University Implant Symposium, December 13, 1991.

41. "An Interdisciplinary Core Course in Statics, Linear Algebra and Computing as part of the Pre-Engineering Curriculum at Rensselaer Polytechnic Institute," Engineering Foundation Conference on Engineering Education, Curriculum Innovation and Integration, Santa Barbara CA, January 5-10, 1992. (with K.C. Hinge and D. Lagoudas)

42. "Should We Connect Fixtures With Teeth Or Not?" Annual Meeting of the European Society for Osseointegration, Leuven, Belgium, February 9, 1992.

43. "Dental Implants: Biomaterials, Biomechanics and Bioengineering," Postdoctoral Course Program (Fundamentals of Implant Dentistry) Harvard School of Dental Medicine, Boston MA, February 24, 1992.

44. "Implant Biomechanics," The Nobelpharma Challenge Meeting, San Diego CA, March 3, 1992.

45. "Biomechanics of Dental Implants," Implantology Symposium, Boston University School of Dentistry, May 11, 1992.

46. "Biomechanics: Loadings, Stress Transfer and Interfacial Response," 1992 Implant Conference, American Academy of Periodontology, Chicago IL, August 16, 1992.

47. "Biomechanical Considerations in the Use of Dental Implants," Nobelpharma National Team Day, Toronto, Canada, September 17, 1992.

48. "A Discussion of Finite Element Models for Evaluation of Dental Implants," Joint Symposium of the Implantology Research Group and the Dental Materials Group, Annual Meeting of the American Association for Dental Research (AADR), Boston, MA, March 11-15, 1992.

49. "Can Prosthetic Screws Be Permanently Tightened?" 10th Anniversary of Osseointegration in Private Practice, Lansdowne Conference Resort, Lansdowne VA, October 9, 1992.

50. Panel Discussant, "Biological, Material and Mechanical Considerations of Joint Replacement: Current Concepts and Future Directions," Bristol-Myers Squibb/Zimmer Orthopaedic Research Symposium, San Antonio, TX, October 29-November 2, 1992.

51. "Dental Implant Biomechanics," Columbia University, School of Dental Medicine, New York City, NY, December 14, 1992.

52. Brunski, "Biomechanics of Bone," New Orleans Winter Symposium of the American College of Oral Implantology, January 22-23, 1993.

53. "Dental Implants - Biomechanics," Oral Biology Course "Fundamentals in Implant Dentistry", Harvard School of Dental Medicine, Boston, MA, March 1, 1993.

54. "Biomechanics of Implants," Second Annual Symposium on Implantology, Boston University Goldman School of Graduate Dentistry, Boston, MA, May 10, 1993.

55. Brunski JB, Hoshaw, S.J., Cochran, G.V.B. and Higuchi, K.W. "Biomechanics of Oral Implants: Relationships Between Biomechanics and Bone Biology at the Bone-Implant Interface," Recent Advances in Oral and Orthopaedic Prostheses, Venice, Italy, May 26-29, 1993.

56. "Biomechanical Considerations in the use of Dental Implants," Nobelpharma Western Team Day ("The Team Approach to Diagnosis and Treatment Planning"), Vancouver, British Columbia, September 24, 1993.

57. "Problems and Complications: Biomechanical Considerations in Load Transmission to Bone and Implant Components," Spokane Center for Tissue-Integrated Reconstruction Reunion Group Meeting, Victoria, British Columbia, September 24, 1993.

58. "Dental Implants - Biomechanics," Oral Biology Course "Fundamentals in Implant Dentistry", Harvard School of Dental Medicine, Boston, MA, October 4, 1993.

59. "Bone/Implant Surface Interactions," American Academy of Implant Dentistry Research Foundation, Dallas TX, October 8, 1993.

60. “The role of biomechanics in case planning with oral implants” presented at “Scientific Frontiers in Clinical Dentistry Symposium” sponsored by NIDR-NIH and held at the Annual Meeting of the American Association for Dental Research, San Antonio TX, 11 March 1995.

61. “Biomechanics of oral implants”, presented to the staff of the Dental Service of the Lakland Air Force Base, San Antonio TX, 6 April 1995.

62. “Implant biomechanics: implant loading and effect on bone” presented at the meeting entitled “Basic Research/Clinical Applications”, of the Annual Meeting of the American Society of Osseointegration, 7-9 April 1995, San Antonio, TX.

63. “Biomechanics” presented at the Fourth Annual International Symposium on Implantology, Boston University Goldman School of Graduate Dentistry, Boston MA, May 16, 1995.

64. “Biomechanics and implant design” Presented at the Sixth Annual Review in Prosthodontics, University of Michigan School of Dentistry, Ann Arbor MI, Sept. 29, 1995.

65. “Dental implants - biomechanics” presented as part of Oral Biology Course 606, “Fundamentals of Implant Dentistry”, Harvard School of Dental Medicine, Oct. 2, 1995.

66. “Does biomechanical damage stimulate interfacial bone response to oral implants?” presented at *The Biological Mechanisms of Tooth Movement and Craniofacial Adaptation*, Oct. 19-21, 1995.

67. “Biomechanical basis of bone-implant reactions” presented at *Osteology 2000*, Vienna, Austria, Nov. 10-11, 1995.

68. “The role of biomechanics in case planning with oral implants”, Implant Dentistry Training Program 1995-96, Univ. of Miami, Feb. 17, 1996, Mayfair House, Coconut Grove, FL.

69. “Force and moment distribution among three abutments: staggered vs. in-line arrangement”, pp. 57-58, *Proc. 11th Annual Meeting of the Academy of Osseointegration* (Feb. 29-Mar. 2, 1996), New York City.

70. "Biomechanics", Fifth Annual International Symposium on Implantology, May 14, 1996, Boston University Goldman School of Graduate Dentistry, Boston MA.

71. "Biomechanical considerations in the use of oral implants", June 11, 1996, NYU College of Dentistry, Dept. of Prosthodontics and Implants, NYC, NY.

72. "Biomechanics of oral implants", Brookdale Hospital Maxicourse on Oral and Maxillofacial Implants, Sept. 22, 1996, NYU Dental School, New York, NY.

73. "Studio/laptop version of Intro to Engineering Analysis (IEA)," presented at *1996 EDUCOM*, Oct. 1, 1996, Philadelphia PA. (with R.L. Spilker)

74. "Dental implants - biomechanics," Oct. 7, 1996, presented as part of Oral Biology Course 606, "Fundamentals of Implant Dentistry", Harvard School of Dental Medicine, Boston, MA.

75. "Biomechanical considerations with dental implants", Oct. 17, 1996, Department of Prosthodontics, Dept. of Prosthodontics, Eastman Dental Center, Rochester, NY..

76. "Biomechanics and implant design" Oct. 24, 1996, Presented at the 7th Annual Review in Prosthodontics, University of Michigan School of Dentistry, Ann Arbor MI,.

77. "Biomechanical balancing act: treatment planning for fixed prosthetics", Nov. 8, 1996, Master Clinician Lectures, 11th Implant Team System Seminar, Los Angeles, CA.

78. "Biomechanics of misfitting implant crowns and frameworks", Ohio State University School of Dentistry, Jan. 10, 1997.

79. "Dental implant failures: biomechanical considerations" presented at the Implantology Research Group Symposium, Thursday March 20, 1997, at the 1997 IADR Meeting, March 19-23, 1997 Orlando FL.

80. "Dental implants - biomechanics" presented as part of Oral Biology Course 606, "Fundamentals of Implant Dentistry", Harvard School of Dental Medicine, Sept. 29, 1997.

81. "Biomechanics and implant design" Presented at the 8th Annual Review in Prosthodontics, University of Michigan School of Dentistry, Ann Arbor MI, Oct. 24, 1997.

82. "Biomechanics of Immediate and Early Loading of dental Implants." Presented at the "International Workshop on Early and Immediate Loading of Dental Implants: Predictable failure or Predictable Success?", Venice, Italy, Nov. 7-9, 1997.

83. "Introduction to engineering analysis (statics and linear algebra)", presented as part of the session entitled *Mechanics in a Restructured Engineering Curriculum-II*, at the 1997 International Mechanical Engineering Congress & Exposition, Dallas, TX, Tuesday Nov. 18, 1997.

84. "Biomechanics of oral implants", Brookdale Hospital Maxicourse on Oral and Maxillofacial Implants, NYU Dental School, NYC, NY, Dec. 14, 1997.

85. "Biomechanical Risk Factors", presented as a keynote talk at the 1998 Academy of Osseointegration meeting, Atlanta, GA, March 1998.

86. "Preceptorship in Dental Implantology-Biomechanical Aspects of Dental Implants", University of Texas at San Antonio Health Science Center, March 15, 1998

87. "Biomechanical Case Planning with Oral Implants", May 8, 1998 at the Northeastern Gnathological Society, Pierre Hotel, NYC.

88. "*In Vivo* Bone Response to Biomechanical Loading at the Bone-Dental Implant Interface", presented at the 3rd Annual Indiana Conference, *Bridging the Gap Between Dental and Orthopaedic Implants*, Indiana University School of Dentistry, May 13-16, 1998.

89. "Implant Biomechanics" Presented at the *Symposium on Implant Controversies and Solutions*, UCLA School of Dentistry, Continuing Dental Education, Los Angeles, CA, May 23, 1998.

90. "Biomechanical Case Planning with Oral Implants", presented at the *Mediterranean Conference on Osseointegration*, June 5-6, 1998, Barcelona, Spain.

91. "*In Vivo* Bone Response to Biomechanical Loading at the Bone-Dental Implant Interface", presented at the *15th International Conference on Oral Biology (ICOB), Oral Biology and dental Implants,* June 28-July 1, 1998, Baveno, Italy.

92. "Mechanics and Linear Algebra of the Bicycle", poster presentation at the June '98 meeting of *Mathematics Throughout the Curriculum II (MATC II),* sponsored by National Science Foundation, at West Point Military Academy, West Point NY.

93. "Biomechanical aspects of immediate loading", presented at the *1st International Conference on Understanding the Basics of Immediate Loading, The State of the Art*, sponsored by the International Study Group for a Predictable Immediate Loading of Orthopaedic and Dental Implants (ISG-PILODI), Klink-Berlin, Sept. 25, 1998.

94. "Biomechanical considerations with dental implants", presented as part of Oral Implantology Course at Eastman Dental Center, Oct. 15, 1998.

95. "Biomechanical considerations for the zygoma fixture", 1998 Spokane Center for Tissue Integrated Reconstruction Reunion Group Meeting, Hotel Lusso, Spokane WA, Oct. 23-25, 1998.

96. "Biomechanics and implant design", Ninth Annual Comprehensive Review in Prosthodontics, School of Dentistry, Univ. of Mich., Oct. 29, 1998.

97. "Preceptorship in Dental Implantology-Biomechanical Aspects of Dental Implants", University of Texas at San Antonio, Health Science Center, Nov. 8, 1998

98. "Biomechanics of Early Loading of Implants", and "Biomechanical Considerations for Zygomatic Fixtures", at the Reunion Group Meeting, Feb. 27-28, 1999, Coeur D'Alene, Idaho.

99. "Biomechanics of Osseointegration", presented as part of an Oral Biology course for graduate dentists at Harvard School of Dental Medicine, March 22, 1999.

100. "Two Problem Areas in Dental Implants: Immediate Loading and Bone-Implant Bonding", a seminar to students and faculty at NYU School of Dentistry, New York, NY, April 7, 1999.

101. "Mechanics and Linear Algebra of the Bicycle", a workshop-computer lab presentation at the '99 meeting of *Mathematical Sciences and their applications Throughout the Curriculum (MATC),* sponsored by National Science Foundation, Indiana University, Bloomington, IN, July 9-10, 1999

102. "Orthodontic Applications of Implants: Biomechanical Issues", 85th Annual Meeting of the American Academy of Periodontology, San Antonio TX, Sept. 25-29, 1999.

103. "Biomechanics and Implant Design", 10th Annual Comprehensive Review in Prosthodontics, School of Dentistry, Univ. of Mich., October 31, 1999.

104. "Biomechanics of Oral Implants", 3.5-hour morning workshop at the 11th Annual Implant Maxicourse, sponsored by The Brookdale University Hospital and Medical Center, held at NYU Dental School, NY, Nov. 21, 1999.

105. "Two Problem Areas in Dental Implants: Immediate Loading and Bone-Implant Bonding",, seminar to dental school faculty and students, University of Connecticut Health Center, Farmington, CT, Dec. 2, 1999.

106. "Preceptorship in Dental Implantology-Biomechanical Aspects of Dental Implants", University of Texas at San Antonio, Health Science Center, Feb. 6, 2000.

107. "Biomechanics of Dental Implants", presented as part of an Oral Biology course for graduate dentists at Harvard School of Dental Medicine, May 15, 2000.

108. "Biomechanics", 9th Annual International Symposium on Implantology, Boston University Goldman School of Graduate Dentistry, Boston MA, May 16, 2000.

109. "Further understanding of the zygomaticus fixture," Novum Training Course, Spokane Center for Tissue Integrated Reconstruction, Spokane, Washington, September 18, 2000.

110. "The biomechanics of immediate loading and the Brånemark Novum," Novum Training Course, Spokane Center for Tissue Integrated Reconstruction, Spokane, Washington, September 19, 2000

111. "Biomechanical factors influencing implant stability and bone resorption," presented at the *2nd Seminar on Immediate Function*, Nobel-Biocare, Göteborg, Sweden, October 6-7, 2000.

112. "Biomechanical considerations in use of oral implants", presented as part of a course in oral and maxillofacial implants for graduate dentists at Eastman School of Dental Medicine, Rochester, NY, Oct. 26, 2000.

113. "Screw vs. Cylinder vs. Tapered: Pro Screw" presented at *The Great Debate: Which System to Use*, American Academy of Oral and Maxillofacial Surgeons (AAOMS) Dental Implant Conference, Chicago IL Dec. 1-2, 2000.

114. "Biomechanics", 10th Annual International Symposium on Implantology, Boston University Goldman School of Graduate Dentistry, Boston MA, May 15, 2001.

115. "Toward a definition of safe vs. dangerous loading at the bone-oral implant interface." Presented at the Annual Meeting of the American Academy of Prosthodontics, Oct. 31-Nov. 3, 2001, New Orleans, LA.

116. "Biomechanics of oral implants", 3-hour morning workshop at the 13th Annual Implant Maxicourse, sponsored by The Brookdale University Hospital and Medical Center, held at NYU Dental School, NY, December, 2001.

117. "Biomechanical issues in the use of oral implants." Presented the Delaware Valley Academy of Osseointegration, Feb. 20, 2002, Philadelphia, PA.

118. "Biomechanics of bone and oral implants." Presented to the post-graduate oral surgery, prosthodontic and periodontics residents at Harvard School of Dental Medicine, April 30, 2002, Boston, MA.

119. "Oral implant biomechanics." Presented at the 11th Annual International Symposium on Implantology, Boston University Goldman School of Graduate Dentistry, Boston, MA, May 13, 2002.

120. "Biomechanical considerations in the use of oral implants." Presented at the Annual Meeting of the Pennsylvania Prosthodontic Association, June 7, 2002, State College, PA.

121. "The Future of Oral Implants." Presented at the Dean's honorary symposium, Boston University Goldman School of Graduate Dentistry, Boston, MA, September 22, 2002.

122. "Current biomechanical issues with oral implants." Presented at the Dept. of Prosthodontics, Eastman Dental Center, Rochester NY, October 17, 2002.

123. "Biomechanics of oral implants", 8-hour seminar at the 14th Annual Implant Maxicourse, sponsored by The Brookdale University Hospital and Medical Center, held at NYU Dental School, NY, December, 2002.

124. "Preceptorship in Dental Implantology: Biomechanical Aspects of Dental Implants", University of Texas at San Antonio, Health Science Center, Feb. 9, 2003.

125. "Current biomechanical issues with oral implants." Presented at the Oneida-Herkimer County Dental Society Lecture Series, April 7, 2003, Utica NY.

126. "Biomechanical aspects of the use of oral implants", a lecture within the graduate dental school course entitled "Fundamentals of osseointegration", Dept. of Restorative Dentistry, Harvard School of Dental Medicine, Harvard University, May 5, 2003, Boston, MA

127. "Biomechanical aspects of immediate loading of oral implants." Spokane Reunion Group, Spokane Center for Tissue Integrated Reconstruction, May 9-10, 2003, Spokane, WA.

128. "Biomechanical and prosthetic design." Part of a 3-person panel of presenters, *12th Annual International Symposium on Implantology*, Boston University Goldman School of Graduate Dentistry, May 12-17, 2003, Boston, MA.

129. "The role of strain in the healing process of bone-anchored implants" seminar to the Dept. of Mechanical Engineering, University of Alberta, Edmonton, Alberta, 9/25/03

130. "Oral implant bioengineering at macro and molecular levels ", invited speaker at "Celebrating the Past and Facing the Future, 10 Years of Excellence of COMPRU", presented at "COMPRU", the Craniofacial Osseointegration & Maxillofacial Prosthetic Rehabilitation Unit, Misericordia Community Hospital, Edmonton, Alberta, 9/26/03

131. "Mechanobiology at healing bone-implant interfaces" presented at *Biotechnology: Innovation, Opportunity, & Commercialization*, a symposium at Rensselaer Polytechnic Institute, Troy, NY, 10/23/03

132. "Implant Biomechanics", presented at the Prosthodontic Review Course, American College of Prosthodontics (ACP), Chicago, IL, Nov. 13, 2003.

133. "Biomechanical aspects of the use of oral implants" an 8-hour presentation within the *New York Maxicourse in Oral Implantology*, NYU School of Dentistry, Nov. 15, 2003, New York NY

134. "Biomechanical aspects of oral implants", a lecture within the graduate dental school course entitled "Fundamentals of Implant Dentistry", OB606.CBS, Dept. of Restorative Dentistry and Biomaterials Sciences, Harvard School of Dental Medicine, Harvard University, March 29, 2004, Boston, MA

135. "Mechanisms of Endosseous Integration", *13th Annual International Symposium on Implantology*, Boston University Goldman School of Graduate Dentistry, May 10-15, 2004, Boston, MA

136. "Biomechanics", *13th Annual International Symposium on Implantology*, Boston University Goldman School of Graduate Dentistry, May 10-15, 2004, Boston, MA

137. "Implant Biomechanics", presented at the Prosthodontic Review Course, American College of Prosthodontics (ACP), Chicago, IL, 11/15/04.

138. "Biomechanical aspects of the use of oral implants" an 8-hour presentation within the *New York Maxicourse in Oral Implantology*, NYU School of Dentistry, Nov. 16, 2004, New York NY

139. "Biomechanical aspects of oral implants", a lecture within the graduate dental school course entitled "Fundamentals of Implant Dentistry", OB606.CBS, Dept. of Restorative Dentistry and Biomaterials Sciences, Harvard School of Dental Medicine, Harvard University, March 28, 2005, Boston, MA

140. "Biomechanics", *14th Annual International Symposium on Implantology*, Boston University Goldman School of Graduate Dentistry, May 16, 2005, Boston, MA

141. "Mechanobiology at healing bone-implant interfaces", invited keynote lecture, *30th Congress of the Societé de Biomécanique*, Brussels, Belgium, 14-16 September, 2005.

142. "Implant biomechanics at the level of prosthodontics and the bone-implant interface", a 4-hour lecture, *Osseointegration Study Club of Southern California*, October 30, 2005

143. "Biomechanics to help case planning with oral implants", presented as a 1-hour "lunch & learning" session, *54th Annual Meeting of the American Academy of Implant Dentistry*, Scottsdale, AZ, Oct. 19-23, 2005

144. "Dental implant research at the macro and molecular levels", *54th Annual Meeting of the American Academy of Implant Dentistry*, Scottsdale, AZ, October 19-23, 2005.

145. "Biomechanical aspects of the use of oral implants" an 8-hour lecture, *New York Maxicourse in Oral Implantology*, NYU School of Dentistry, Nov. 5, 2005, New York City, NY

146. "Implant biomechanics at the level of prosthodontics and the bone-implant interface", a 6-hour lecture at the *Center for Tissue Integrated Prostheses*, Spokane, WA, November 11, 2005.

147. "Implant Biomechanics", presented at *Prosthodontics Update 2005: State-of-the-art*, annual review course of the *American College of Prosthodontics*, Chicago, IL, November 17-19, 2005

148. "Engineering approaches for interface design and surface morphology", presented at the Annual Meeting of the *American Academy of Oral and Maxillofacial Surgeons,* December 3, 2005

149. "Oral implant bioengineering at the macro, micro, and molecular levels." A 4-hr. course presented at the *11th Preceptorship in Dental Implantology*, Continuing Dental Education, The University of Texas Health Science Center at San Antonio, Dental School, Feb. 11, 2006.

150. "Biomechanical aspects of oral implants", a lecture within the graduate dental school course entitled "Fundamentals of Implant Dentistry", *OB606.CBS, Dept. of Restorative Dentistry and Biomaterials Sciences,* Harvard School of Dental Medicine, Harvard University, April 24, 2006, Boston, MA

151. "Biomechanics", *15th Annual International Symposium on Implantology*, Boston University Goldman School of Graduate Dentistry, May 8, 2006, Boston, MA

152. "Biomechanical aspects of oral implants", a lecture within the graduate prosthodontics curriculum, Tufts University School of Dental Medicine, Boston, MA, May 8, 2006

153. "Oral implant bioengineering from the macro to the molecular level", School of Dental Medicine, University of Pennsylvania, Philadelphia, PA, May 17, 2006

154. "Looking backwards and forwards at oral implants", *First William R. Laney Lecture*, Sept. 9, 2006, Department of Prosthdontics, Mayo Clinic, Rochester, MN.

155. "Current biomechanical issues with oral implants." Presented at the Dept. of Prosthodontics, Eastman Dental Center, Rochester NY, October 19, 2006.

156. "Biomechanical aspects of the use of oral implants" an 8-hour presentation within the *New York Maxicourse in Oral Implantology*, NYU School of Dentistry, Nov. 11, 2006, New York NY

157. "Biomechanical considerations in the use of oral implants", lecture to approx. 80 residents in graduate prosthodontics, VA Medical Center, NY, NY, Nov. 30, 2006.

158. "Dental implant research at the macro and molecular levels", *2006 Jerome M. and Dorothy Schweitzer Research Award Lecture*, Greater New York Academy of Prosthdontics (GYNAP), Dec. 1, 2006

159. "Oral implant bioengineering at the macro, micro, and molecular levels." A 3-hr. course presented at the *12th Preceptorship in Dental Implantology*, Continuing Dental Education, The University of Texas Health Science Center at San Antonio, Dental School, Feb. 11, 2007.

160. "Mechanobiology at Healing Bone Implant Interfaces: Strain States and Interfacial Response.", presented to the Univ. of Alabama at Birmingham, April 6, 2007, seminar program in Biomedical Engineering.

161. (Keynote presentation) "*The Late Show's* Top-Ten list of embarrassing questions that patients could ask about dental implants", presented at the *12th Biennial 2007 International Conference on Reconstructive Preprosthetic Surgery*, April 16-18, 2007, Charleston, SC.

162. "Biomechanical aspects of oral implants", a lecture within the graduate dental school course entitled "Fundamentals of Implant Dentistry", *OB606.CBS, Dept. of Restorative Dentistry and Biomaterials Sciences,* Harvard School of Dental Medicine, Harvard University, April 23, 2007, Boston, MA

163. "Biomechanics", *16th Annual International Symposium on Implantology*, Boston University Goldman School of Graduate Dentistry, May 14, 2007, Boston, MA

164. "Biomechanical aspects of oral implants", a lecture within the graduate prosthodontics curriculum, Tufts University School of Dental Medicine, Boston, MA, May 14, 2007

165. Implant loading & interfacial tissue response: recent research", presented at the Keystone Dental Technology Symposium, Aug. 16-19, 2007, Broadmoor Resort, Colorado Springs, CO

166. "Biomechanics in case planning", presented to the *Academy of Comprehensive Dental Studies*, Morristown, NJ, Oct. 24, 2007

167. "Oral implant bioengineering at the macro, micro, and molecular levels." A 3-hr. course presented at the *13th Preceptorship in Dental Implantology*, Continuing Dental Education, The University of Texas Health Science Center at San Antonio, Dental School, Nov. 4, 2007.

168. "Biomechanical aspects of the use of oral implants" an 8-hour presentation within the *New York Maxicourse in Oral Implantology*, NYU School of Dentistry, Nov. 17, 2007, New York NY.

169. "Implant Loading & Interfacial Tissue Response: Some Recent Translational Research", presented Dec. 5, 2007 at the Portland, OR Dental Implant Study Club, sponsored by Neoss Inc.

170. "Biomechanical aspects of oral implants", a lecture within the graduate dental school course entitled "Fundamentals of Implant Dentistry", *OB606.CBS, Dept. of Restorative Dentistry and Biomaterials Sciences,* Harvard School of Dental Medicine, Harvard University, April 21, 2008, Boston, MA

171. "The healing bone-implant interface: role of micromotion and related strain levels in tissue", presented at *The Toronto Osseointegration Conference Revisited,* May 10, 2008

172. "Biomechanics", *17th Annual International Symposium on Implantology*, Boston University Goldman School of Graduate Dentistry, May 12, 2008, Cambridge, MA

173. "Biomechanical aspects of oral implants", a lecture within the graduate prosthodontics curriculum, Tufts University School of Dental Medicine, Boston, MA, May 12, 2008

174. "Immediate loading and interfacial response", presented at the *2nd Astra World Congress*, Gaylord National Conference Center, Washington DC, June 4-7, 2008

175. "Biomechanics of the Bone-Implant Interface: Some Research Updates", presented at *Club 22 Meeting*, Spokane, WA, August 14, 2008

176. "Biomechanical aspects of the use of oral implants" an 8-hour presentation within the *New York Maxicourse in Oral Implantology*, NYU School of Dentistry, Nov. 8, 2008, New York NY.

177. "Oral implant bioengineering at the macro, micro, and molecular levels." A 3-hr. course presented at the *14th Preceptorship in Dental Implantology*, Continuing Dental Education, The University of Texas Health Science Center at San Antonio, Dental School, Nov. 9, 2007.

178. "Replacing Lost Teeth With Implants: Biomechanical Aspects", invited keynote, AIOP's 27th International Congress, *The Bridge: Prosthesis in Extinction*, Bologna, Italy, November 20-22, 2008

179. "The Mechanics of Immediate Loading: Force Distribution and Possible Concerns", invited podium presentation, in a session entitled: *Treatment Approaches to the Partially & Completely Edentulous Atrophic Maxilla – Guided, Unguided or Misguided?* Academy of Osseointegration Annual Meeting, February 26-28, 2009, San Diego, CA

180. "Update on the Biomechanics of Oral Implants", invited presentation at the *57th Meeting of the American Academy of Maxillofacial Prosthetics*, November 2-4, 2009, San Diego, CA

181. "Implant geometries and the impact on bone", invited podium presentation at the *P-I Brånemark Scientific Symposium on Osseointegration and Related Treatment Modalities*, Oct. 29-31, 2009, Göteborg, Sweden

182. "The Mechanical Problem: Considering the Bone Response," invited presentation at the *2009 Dental Implant Conference, American Academy of Oral and Maxillofacial Surgeons,* December 4 – 6, 2009, Chicago, IL

183. "Dental implant bioengineering at macro and molecular levels," invited lecture to graduate dental students in prosthodontics and oral surgery, Loma Linda Univeristy, Feb. 16, 2010

184. "Biomechanical Models & Methods in Oral Implant Research," invited seminar to graduate students in a course entitled "Models and Methods in Dental Implant Research", University of Göteborg, Göteborg, Sweden, March 10, 2010.

185. "Implant Biomaterials and Biomechanics: Some Basic Concepts and a Few Case Studies", a lecture within the graduate prosthodontics curriculum, Tufts University School of Dental Medicine, Tufts University, Boston, MA, May 19, 2010.

186. "Mechanobiology of the bone-dental implant interface: macro, micro, and molecular views", invited lecture as part of the "Distinguished Lecture Series", College of Dentistry, The Ohio State University, Oct. 27, 2010.

187. "Biomechanical considerations with oral implants", 4-hr. course presented at the *15th Preceptorship in Dental Implantology*, Continuing Dental Education, The University of Texas Health Science Center at San Antonio, Dental School, Nov. 7, 2010.

188. "Biomechanical considerations with oral implants", a 3-hr. course for the Oral Implantology Seminar, Eastman Dental Center, University of Rochester, Rochester, NY, Dec. 10, 2010.

189. "Implant Biomaterials and Biomechanics: Some Basic Concepts and a Few Case Studies", a lecture within the graduate prosthodontics curriculum, Tufts University School of Dental Medicine, Tufts University, Boston, MA, April 20, 2011.

190. "Biomechanical considerations with oral implants", 4-hr. course presented at the 17th Preceptorship in Dental Implantology, Continuing Dental Education, The University of Texas Health Science Center at San Antonio, Dental School, Nov. 6, 2011.

191. "Case planning with attention to biomechanics", presented to a dental implant study group, San Diego, CA, Oct. 27, 2011.

192. "Implant Micromotion: The Good, The Bad and The Ugly", presented at the *Northeast Gnathological Society* (Fall Scientific Seminar) New York City, NY, November 11, 2011.

193. "Successful Osseointegration: The nuts and bolts of bone formation around, and the mechanical loading of, dental implants", presented together with Jill A. Helms at the Spokane Center for Tissue Integrated Reconstruction, Spokane, WA January 27, 2012.

194. "The slant on tilted implants", Limited Attendance Lecture at the *27th Annual Meeting of the Academy of Osseointegration*, Phoenix, AZ, March 1-3, 2012.

195. "Implant Micromotion: The Good, The Bad and The Ugly", Presented at the *American College of Prosthodontists 42nd Annual Session*, November 2, 2012, Baltimore, MD.

196. "Implant Biomaterials and Biomechanics: Some Basic Concepts and a Few Case Studies", a lecture within the graduate prosthodontics curriculum, Tufts University School of Dental Medicine, Tufts University, Boston, MA, November 14, 2012.

197. "Biomechanical considerations with oral implants", a 4-hr. course for the Oral Implantology Seminar, Eastman Dental Center, University of Rochester, Rochester, NY, November 16, 2012.

198. "Biomechanical considerations with oral implants", 4-hr. course presented at the 18th Preceptorship in Dental Implantology, Continuing Dental Education, The University of Texas Health Science Center at San Antonio, Dental School, Feb. 2, 2013.

199. "Biomechanical analyses relating to fractures of 'thin' mandibles treated with implants", presented at the 2013 meeting of the *International Association for Oral and Facial Reconstruction*, March 5, 2013, Tampa, FL.

200. "How and why are biomechanics so important in case planning with dental implants?", presented at Columbia University College of Dental medicine, May 25, 2013.

201. "Golf Instructor Jim McLean Has His Fixes for the Top 10 Death Moves: What's the Analogy When it Comes to Dental Implants?" presented at the Pennsylvania Prosthodontics Association Meeting, Toftrees Resort, State College PA, June 1, 2013.

202. "Oral Implant Biomechanics: Perspectives of Success and Failure", presented at Western New England University, Biomedical Engineering Department, July 26, 2013, Springfield, MA 01119

203. "Biomechanics of implant-supported prostheses: from bench tests to clinical results", a 4-hour workshop presented at the *2013 Latin America Osseointegration Congress*, Sao Paulo, Brazil, Sept. 25-28, 2013.

204. "Biomechanics of solutions for edentulous jaws – with a focus on tilted implants and 'All-on-4' ", presented at the Klinik für MKG-Chirugie-plastische Operationen, University of Mainz, Germany, March 26, 2014.

205. "Biomechanical Research on Oral Implants: Defining the Problem, Doing the Research, and Publishing the Results", presented at Harvard School of Dental Medicine, June 17, 2014, as part of a symposium sponsored by The Osteology Foundation.

206. "Mechanobiology at the Immediately-Loaded Oral Implant-Tissue Interface", presented as part of the Biomechanical Engineering Seminar Series, Stanford University Department of Mechanical Engineering, April 27, 2015.

207. "Biomechanical considerations with oral implants", 4-hr. course presented at the 21st Annual Preceptorship in Dental Implantology, Continuing Dental Education, The University of Texas Health Science Center at San Antonio, Dental School, October 31, 2015.

208. "Insights into the biomechanics of healing tissues: simulations with Comsol", presented at *Comsol Day*, April 7, 2016, Santa Clara, CA, sponsored by Comsol Multiphysics.

209. "Mechanobiology of immediate loading", a joint presentation by JA Helms and JB Brunski in Block A, Session entitled "Designing for Life, The patient journey, Refinements in protocols" at the Nobel Biocare Global Symposium 2016, New York City, June 23-26, 2016.

210. "Research in oral implant biomechanics", presentation at the summer internship program in the lab of Prof. JA Helms, August 3, 2016.

211. "A mechanobiological perspective on osteotomy site preparation", talk #1137 on Friday March 23, 2018, for the AADR symposium session *Optimizing the mechanics and biology of implant osseointegration* at the AADR/CADR Annual Meeting & Exhibition, 21-24 March 2018, Fort Lauderdale, Florida, USA.

212. "The mechanobiology of immediate loading in 50-minutes", Brunski JB and Helms, JA, presented at the *Pacific Coast Society for Prosthodontics (PCSP), 84th Annual Meeting*, Silverado Resort and Spa, Napa, California, June 12-23, 2019

213. "Revolutionizing implant dentistry: Innovations to change the way you treat patients." Chair: Gabor Tepper: Speakers Oded Bahat, John Brunski, Annette Felderhoff-Fischer, Jill Helms, Sascha Jovanovic, Francesco Mintrone, Paul Weigl, Holger Zipprich. *Nobel Biocare Global Symposium*, Friday June 28-29, 2019 Madrid, Spain

214. "Science made simple: behind the scenes of Nobel Biocare N1" Workshops B31, B33 on Fri. June 28 and C31 on Sat. June 29, 2019, presented by John Brunski, Jill Helms, and Holger Zipprich, *Nobel Biocare Global Symposium*, June 28-29, 2019 Madrid, Spain

215. American Academy of Periodontology, "The importance of biological understanding to drive innovations", presented with Jill A. Helms, at the Nobel Biocare Corporate Forum: November 4, 2021, Miami Beach Convention Center in Miami, FL

216. Academy of Osseointegration, "Mechanics of osseointegration: barrier function, implant survival and new insights on the stem cell niche", presented with Jill A. Helms, at the Opening Symposium entitled "The Biology from Micro to Macro", March 16, 2023, Phoenix AZ.