Applied Radiation and Isotopes 69 (2011) 410–414

Contents lists available at ScienceDirect

Applied Radiation and Isotopes

journal homepage: www.elsevier.com/locate/apradiso

Automated radiochemical synthesis of [^{18}F]FBEM: A thiol reactive synthon for radiofluorination of peptides and proteins

Dale O. Kiesewetter*, Orit Jacobson, Lixin Lang, Xiaoyuan Chen

Laboratory of Molecular Imaging and Nanomedicine (LOMIN), National Institute of Biomedical Imaging and Bioengineering (NIBIB), National Institutes of Health (NIH), Building 10, Room 1C401, MSC 1180, Bethesda, MD 20892, USA

ARTICLE INFO

Article history:
Received 14 June 2010
Received in revised form
30 August 2010
Accepted 30 September 2010

Keywords:
PET
Fluorine-18
Thiol reactive synthon
[^{18}F]FBEM

ABSTRACT

The automated radiochemical synthesis of *N*-[2-(4-[^{18}F]fluorobenzamido)ethyl]maleimide ([^{18}F]FBEM, IUPAC name: *N*-maleoylethyl-4-[^{18}F]fluorobenzamide), a prosthetic group for radiolabeling the free sulfhydryl groups of peptides and proteins, is herein described. 4-[^{18}F]fluorobenzoic acid was first prepared by nucleophilic displacement of a trimethylammonium moiety on a pentamethylbenzyl benzoate ester with [^{18}F]fluoride. In the second step the ester was cleaved under acidic conditions. Finally, 4-[^{18}F]fluorobenzoic acid was coupled to *N*-(2-aminoethyl)maleimide using diethylcyanophosphate and diisopropylethyl amine. Following high-performance liquid chromatography (HPLC) purification, [^{18}F]FBEM was obtained in $17.3 \pm 7.1\%$ yield (not decay corrected) in approximately 95 min. Isolation from the HPLC eluate and preparation for subsequent use, which was conducted manually, required an additional 10–15 min. The measured specific activity for three batches was 181.3, 251.6, and 351.5 GBq/ μmol at the end of bombardment (EOB).

Published by Elsevier Ltd.

1. Introduction

Radiolabeled peptides and proteins are increasingly being studied as imaging agents for a wide variety of cellular targets in cancer research and other biological processes. The radionuclides employed for application to positron emission tomography (PET) imaging include fluorine-18, bromine-76, iodine-124, as well as several metallic radionuclides. Radiolabeling with fluorine-18 has been one of our interests because of the favorable nuclear decay properties of fluorine-18 (β^+ 0.635 MeV, 97% abundance, $t_{1/2}$ 109.8 min).

Peptides have been radiolabeled by electrophilic radiofluorination (Ogawa et al., 2003) and by nucleophilic substitution on aromatic rings highly activated toward nucleophilic aromatic substitution (Becaud et al., 2009). While there are a few examples of direct fluorination of appropriately functionalized peptides with [^{18}F]fluorine sources, most peptides and proteins are not expected to be compatible with the conditions required. The use of small prosthetic groups, labeled with fluorine-18, that contain a functional group reactive toward either the ε-amine of lysine residues or the sulfhydryl of cysteine residues has dominated the field of peptide and protein labeling (Wester and Schottelius, 2007). *N*-hydroxysuccinimidyl esters of fluorinated carboxylic acids have been employed to form peptide and protein amides at terminal amines of lysine residues and the terminal alpha amines (Vaidyanathan and Zalutsky, 2006).

Likewise, fluorinated maleimide prosthetic groups have been used to functionalize free sulfhydryls of cysteine residues. A number of these prosthetic groups have been reported. Shiue et al. (1988) reported two ^{18}F-labeled maleimides, 1(4-[^{18}F]fluorophenyl) pyrrole-2,5-dione ([^{18}F]FPPD) and *N*-[3-(2,5-dioxo-2,5-dihydro-pyrrol-1-yl)phenyl]-4-[^{18}F]fluorobenzamide ([^{18}F]DDPFB) in abstract form, but no applications have been published. de Bruin et al. (2005) reported the preparation of the heteroaromatic [^{18}F]maleimide, 1-[3-(2-[^{18}F]fluoropyridine-3-yloxy)propyl]pyrrole-2,5-dione ([^{18}F]FPyME). [^{18}F]FPyME was prepared in three steps; the first step was nucleophilic heteroaromatic substitution by [^{18}F]fluoride on a nitro or trimethylammonium substituted pyridine, followed by deprotection of a primary amine, and then formation of the maleimide. Optimized conditions provided 17–20% (uncorrected) radiochemical yield of [^{18}F]FPyME from [^{18}F]fluoride in 110 min, including high-performance liquid chromatography (HPLC) purification. The procedure has no mention of using an automated device.

N-[4-[(4-[^{18}F]fluorobenzylidene)aminooxy]butyl]-maleimide has also been prepared as an alternative for ^{18}F-labeling of sulfhydryls (Toyokuni et al., 2003). This compound was prepared in two synthetic steps, the first was the synthesis of 4-[^{18}F]fluorobenzaldehyde and subsequently coupling to *N*-[4-(aminooxy)butyl]maleimide. The synthesis, with no indication of automation, provided an overall radiochemical yield after the two synthetic steps and HPLC purification of ~35% (decay corrected) in approximately 60 min.

N-[6-(Aminooxy)hexyl]maleimide has been employed to make two other fluorinated maleimide prosthetic groups. One resulted from coupling to [^{18}F]fluorobenzaldehyde (Berndt et al., 2007). The radiosynthesis, conducted in a Nuclear Interface fluorination

* Corresponding author. Tel.: +1 301 451 3531; fax: +1 301 402 3521.
E-mail address: dk7k@nih.gov (D.O. Kiesewetter).

0969-8043/$ - see front matter Published by Elsevier Ltd.
doi:10.1016/j.apradiso.2010.09.023

module, provided the product following a two-step sequence in a single reaction vessel. The overall yield was ~29% (decay corrected) in a synthesis time of 69 min. The second tracer resulted from coupling with glucose (Wuest et al., 2008). The reported radiochemical yield was 42% (decay corrected) from [^{18}F]FDG in 45 min. The coupling with [^{18}F]FDG may result in several isomeric products.

There are two published syntheses of *N*-[2-(4-[^{18}F]fluorobenzamido)ethyl]maleimide ([^{18}F]FBEM, IUPAC name: *N*-maleoylethyl-4-[^{18}F]fluorobenzamide). One of the syntheses, published by Cai et al. (2006), first prepared *N*-hydroxysuccinimidyl [^{18}F]fluorobenzoate ([^{18}F]SFB), which is a three-step reaction, and reacted that product with *N*-(2-aminoethyl)maleimide (upper scheme in Fig. 1). The reported radiochemical yield based on [^{18}F]fluoride was 5 ± 2% in a synthesis time of ~150 min. We have developed an automated method to conduct our synthesis of [^{18}F]FBEM based on our previously published manual procedure (lower scheme in Fig. 1) (Kiesewetter et al., 2008) and that of the previously published radiochemical synthesis of [^{18}F]fluoropaclitaxel (Kiesewetter et al., 2003; Kalen et al., 2007). The radiochemical synthesis of [^{18}F]FBEM was accomplished in three radiochemical steps using a two-pot synthetic sequence (lower scheme of Fig. 1). [^{18}F]Fluoride displacement of the trimethylammonium moiety of the substrate was conducted in the first reaction vessel; acidolysis of the pentamethylbenzyl protecting group of the benzoic acid and coupling of the resulting [^{18}F]fluorobenzoic acid with *N*-(2-aminoethyl)maleimide using diethylcyanophosphonate as the coupling reagent were conducted in the second reaction vessel. The resulting product was purified by HPLC, isolated from the HPLC eluate, and utilized for coupling with free sulfhydryl peptides.

This procedure, described in detail below, clearly represented an improvement compared to the earlier procedure of Cai et al. (2006) for the preparation of the same maleimide prosthetic group. This procedure required fewer chemical synthesis steps, provided higher yield (17 ± 6% uncorrected), and required less time (~115 min from [^{18}F]fluoride availability) to have product ready for the peptide coupling reaction.

2. Materials and methods

2.1. Hardware and software

We procured a multi-module configuration from Eckert & Ziegler Eurotope GMBH (Berlin) and the corresponding Modular Laboratory Software controller. Initial programming was suggested by Eckert & Ziegler personnel but was modified by us to result in the successful synthesis of FBEM. The modules acquired included two Peltier Reaction Modules (PRM) with pneumatic lifts, internal radioactivity detectors, and stirrer; one solenoid valve module (SVM, 2-way, 5 valves per module); three SVMs (3-way, 5 valves per module); two single stopcock modules (SSM) with Teflon valves (3-way, 3 valves per module); two vial holder modules (VHM) with extra vial holder plates and connector for HPLC module; one KNF vacuum pump; one HPLC module (including injector, pump control, and radioactivity detector), one Knauer Model K120 isocratic HPLC pump (Knauer GmbH, Berlin, Germany); and one Knauer Model 200 UV detector (Knauer GmbH, Berlin, Germany).

The Peltier Reactor Modules could be used with standard v-vials from Wheaton or Alltech of 2–5 mL sizes or with an 11 mL Sigradur reactor vial. We used the Sigradur reaction vial for the fluoride displacement reaction. The Peltier Reactor Modules can heat and cool rapidly; we employed it to heat as high as 120 °C and to cool to 0 °C. Evaporations were conducted with vacuum, argon flow, or a combination of the two methods. Two manifolds for argon, one at 1.2 bar and the second at 0.6 bar, were set up. The higher pressure was used for evaporations and liquid transfers and the lower pressure was used for reagent addition. V-vials (1 mL) were used to contain reagents and solvents that were to be added according to the programmed method. Vials were named 1-x, for 1 mL vials and 2-x for larger volume vials by the software.

2.2. Reagents and supplies

Kryptofix 2.2.2 and K_2CO_3 were purchased from EM Sciences. Kryptofix 2.2.2 solutions could be prepared in bulk at 4.5 mg/

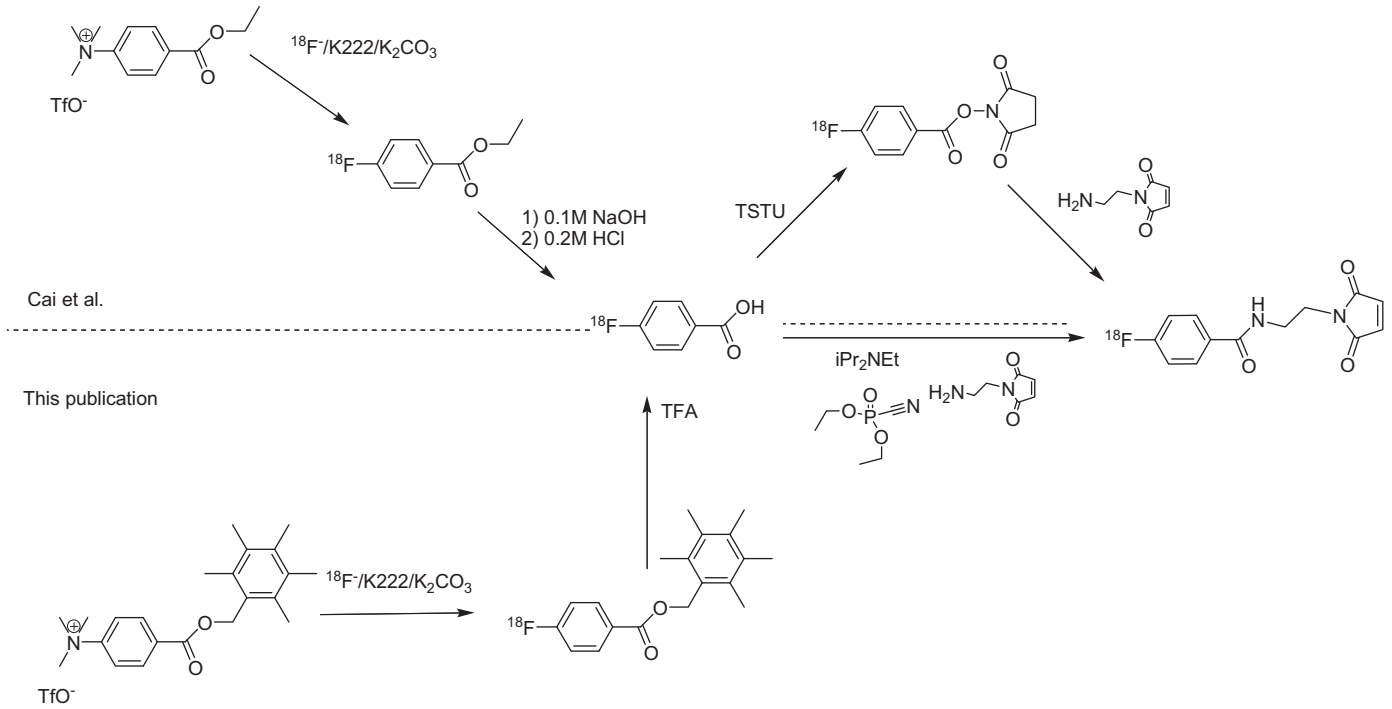

Fig. 1. Scheme of the chemical transformations during the radiochemical synthesis. The steps above the dashed line indicate the procedure of Cai et al. (2006), while those below the line are the steps of the procedure described in this manuscript.

0.1 mL in acetonitrile and stored in a freezer for up to several months. Aqueous K_2CO_3 stock solutions at 0.69 mg/80 μL were stable at room temperature for several months. All other reagent solutions were freshly prepared for each synthesis. Pentamethylbenzyl 4-(*N*,*N*,*N*-trimethylammonium)benzoate trifluoromethanesulfonate was synthesized as previously described (Lang et al., 1999). Diethylcyanophosphonate, diisopropylethyl amine, *N*-(2-aminoethyl)maleimide trifluoroacetate salt, and trifluoroacetic acid were obtained from Sigma-Aldrich. Ammonium acetate, petroleum ether, and ethyl ether were obtained from Mallinckrodt-Baker. Dichloromethane and acetonitrile were obtained from Fisher Scientific. We utilized Sep Pak Light Silica from Waters and Bond Elut cartridges from Varian Instruments.

2.3. HPLC

For semi-preparative HPLC, the software program of the Eckert & Ziegler module initialized the UV detector and the isocratic HPLC pump. The column was equilibrated with 20% CH_3CN: 80% water mixture at 2 mL/min from the beginning of the automated process until the start time of the coupling reaction. At that time the flow was increased to 6 mL/min. After the peak was collected, the eluant was changed to 75% CH_3CN: 25% water in order to elute more non-polar components of the reaction mixture from the column. The column was washed for 20 min with this stronger eluant.

2.4. Automated radiochemical synthesis of FBEM

Module cleaning: the module was plumbed and programmed to conduct the radiochemical synthesis. Prior to conducting synthesis, all vials were replaced with clean vials and the system was cleaned by running water through the vials and tubing that were exposed to the initial [^{18}F]fluoride solution and subsequently by passing acetonitrile through all the vials and tubing on the system. Finally all the tubing and vials were dried with a stream of argon for 10 min. An automated method was written to conduct this cleaning routine. In order to extend the lifetime of the solenoid valves, at the end of every synthesis, acetonitrile was passed through the solenoid valves that carried [^{18}F]fluoride, carbonate/Kryptofix, fluoride-displacement substrate, and diethyl ether solutions. To minimize radiation exposure, this valve flushing was set up to allow remote addition of acetonitrile to the necessary vials. The valves were actuated using the manual mode of the software.

2.5. Setup of module

A clean Sigradur reaction vial was installed in PRM1 (Fig. 2) for every 5–10 syntheses. A clean 5 mL v-vial was placed in PRM2 for each reaction. A Waters Sep Pak Light Silica SPE cartridge was installed in fittings between PRM1 and PRM2. The module was tested for vacuum and pressure leaks. Vial 1-2 was loaded with 500 μL CH_3CN, 4.5 mg Kryptofix 2.2.2, 80 μL water containing 0.69 mg K_2CO_3. Vial 1-3 was loaded with 500 μL CH_3CN. Vial 1-4 was loaded with 400 μL CH_3CN containing 5 mg pentamethylbenzyl (4-trimethylammonium)benzoate trifluoromethanesulfonic acid salt. Vials 1-5 and 1-6 were each loaded with 800 μL ethyl ether. Vial 1-7 was loaded with 150 μL trifluoroacetic acid. Vial 1-8 was loaded with two solutions one of *N*-(2-aminoethyl)maleimide trifluoroacetate salt (2.3 mg in 300 μL CH_3CN) and a second of diethylcyanophosphonate (5.8 mg in 300 μL CH_3CN). Due to some concern with the stability of this solution, it was prepared and placed into the vial during the evaporation of the trifluoroacetic acid during the processing sequence. We entered into the radiation field to place this solution into the module at the appropriate time. Vial 1-9 was loaded with 800 μL of 5% CH_3CN in 50 mM NH_4OAc. Vial 1-10 was loaded with a solution of 20 μL diisopropylethyl amine and 200 μL CH_3CN. Finally, vial 2-1 was loaded with an aqueous solution of [^{18}F]fluoride in a volume not greater than 0.5 mL.

2.6. Processing steps

The [^{18}F]fluoride was transferred into PRM1 followed by addition of the K222/K_2CO_3 solution. PRM1 was heated to 120 °C and argon flow (1.3 bar) with vacuum applied for 5 min. The system pressure was measured to be ~0.5 bar. After two 1 min cycles of full vacuum (−0.99 bar) and then argon flow plus vacuum were applied, a portion of 0.5 mL of CH_3CN was added to PRM1 and the drying cycle was repeated. The complete drying cycle requires about 20 min.

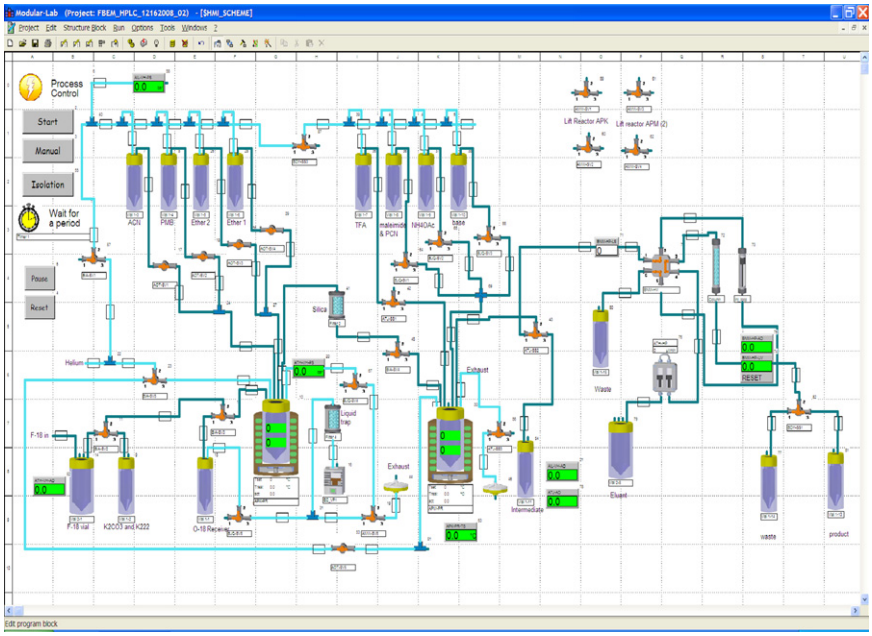

Fig. 2. Schematic of the Eckert & Ziegler module setup that identifies all valves and vials.

2.7. Fluoride displacement reaction

PRM1 was cooled to 40 °C. The substrate for fluoride displacement was added and PRM1 heated to 105 °C for 10 min. PRM1 was set for a temperature of 10 °C and allowed to cool toward that temperature for ~2 min; diethyl ether was added to PRM1 and the lift lowered to allow the transfer of the ethereal solution using argon pressure through the Waters Sep Pak Light Silica and into PRM2. A second portion of ether was added and was transferred through the cartridge. PRM2 was heated to 35 °C and argon flow used to evaporate the ethereal solution. This evaporation proceeded for 4.5 min.

2.8. Cleavage of protecting group

PRM2 was cooled to 20 °C followed by the addition of 150 μL trifluoroacetic acid. After standing for 2 min, PRM2 was cooled to 0 °C. TFA was allowed to evaporate under an argon stream for a total of 6.5 min. At various intervals during this time period the argon flow was stopped for a few seconds and then resumed to effect complete removal of TFA from the reactor.

2.9. Coupling of 4-[^{18}F]fluorobenzoic acid to N-(2-aminoethyl)maleimide

A solution of *N*-(2-aminoethyl)maleimide (2.3 mg in 300 μL CH_3CN) and diethylcyanophosphonate (5.8 mg in 300 μL CH_3CN) was added to PRM2 followed by a solution of diisopropylethyl amine (20 μL in 200 μL CH_3CN). PRM2 was heated to 75 °C for 7 min and then cooled to 35 °C. The reaction solution was evaporated under a stream of argon for 3 min and then diluted with 800 μL of 5% CH_3CN in 50 mM NH_4OAc.

2.10. HPLC purification

The contents of PRM2 were loaded onto the HPLC system (20% CH_3CN in water, 6 mL/min) employing a LUNA C-18(2) 9.4 mm × 250 mm column. The radioactive peak eluting at ~20 min was collected as [^{18}F]FBEM. After peak collection, the HPLC eluant was changed to 75% CH_3CN, 25% water at 6 mL/min for an additional 15 min to clean up the column for the next use.

2.11. Product isolation

The product was isolated from the HPLC eluant by diluting the fraction to 20 mL with water and passing through an activated (2 mL ethanol followed by 2 mL water) Varian Bond Elut C-18 (500 mg) cartridge. The cartridge was washed with 1.5 mL petroleum ether and then the trapped [^{18}F]FBEM was eluted with 1.5 mL CH_2Cl_2. The CH_2Cl_2 was evaporated under a stream of argon. The residue, which contained a small amount of water, was treated with 10 μL of ethanol and then utilized for further protein labeling.

2.12. Determination of radiochemical purity and specific activity

Because [^{18}F]FBEM was used for subsequent coupling, the radiochemical purity and specific activity were not routinely measured. Analytical HPLC employed a Zorbax SB300 C-18 column (4.6 mm × 250 mm, 5 μm), a gradient eluant of 20% A, 80% B at time = 0 to 50% A, 50% B at time = 20. Solvent A was 0.1% TFA in acetonitrile; solvent B was 0.1% TFA in water. The flow rate was 1 mL/min. [^{18}F]FBEM was eluted at ~7.9 min. 4-[^{18}F]Fluorobenzoic acid was eluted at ~9.2 min. For specific activity measurement, the HPLC UV response at 230 nm was calibrated with authentic FBEM.

3. Results

[^{18}F]FBEM was prepared using the sequence shown in Fig. 1 by the modular system shown in Fig. 2. Uncorrected radiochemical yield of [^{18}F]FBEM was 17.3 ± 7.1% (n = 21) from [^{18}F]fluoride. The UV and radiochromatograms (Fig. 3) revealed baseline separation between a large UV impurity and the radioactive product. The procedure, from placing [^{18}F]fluoride into position on the module until collection of the HPLC product peak, required 98 ± 4 min (range 83–110). To date, the highest radioactivity level synthesis employed 8.2 GBq (222 mCi) of [^{18}F]fluoride and provided 1.87 GBq (50.6 mCi) [^{18}F]FBEM in the HPLC fraction 96 min later (22.8% uncorrected; 41.7% corrected for decay). There were three total failures not included in these averages. One failure resulted from a plugged line that prevented loading of the HPLC loop; the other two failures were attributed to instability of the solution of *N*-(2-aminoethyl)maleimide trifluoroacetate salt and diethylcyanophosphonate. The time range was due to continued monitoring and adjustment of the time allowed for complete TFA evaporation and to the small variability in the manual activation of HPLC injection and peak collection. Additional 10–15 min was required to manually prepare the compound for subsequent use in radioconjugation of proteins or peptides. Because the product was used immediately for protein radiolabeling reactions, the specific radioactivity was not routinely measured. However, the specific activity measured for three batches was 181.3, 251.6, and 351.5 GBq/μmol (4.9, 6.8, and 9.5 Ci/μmol) at the end of bombardment (EOB).

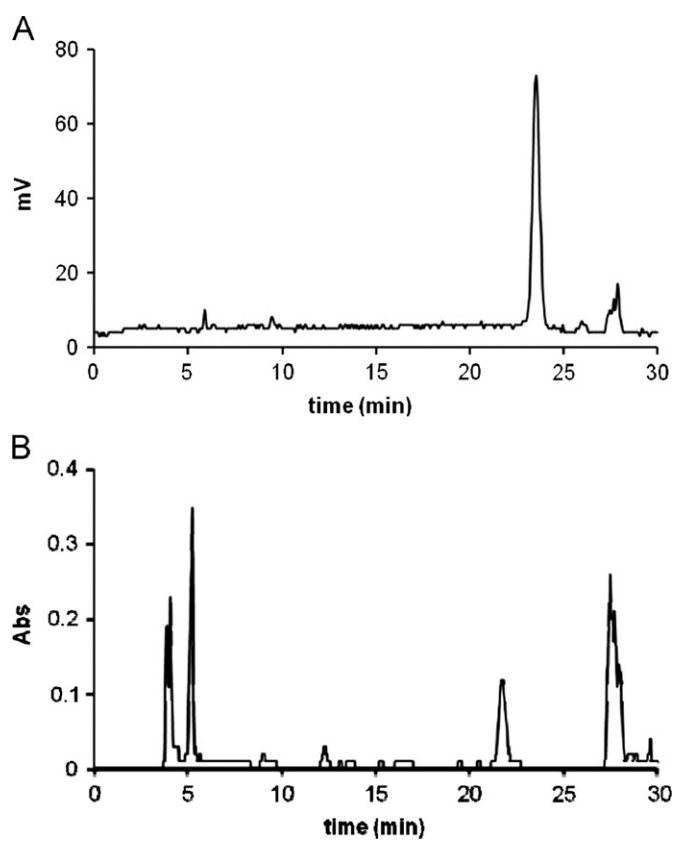

Fig. 3. Example HPLC chromatogram of [^{18}F]FBEM purification; panel A: radiochemical trace and panel B: UV trace at 254 nm.

4. Discussion

The preparation of radiolabeled peptides is a common procedure in PET radiochemistry laboratories. Succinimidyl 4-[^{18}F]fluorobenzoate (SFB) is utilized to radiolabel many peptides and proteins by the formation of amide bonds with ε-amine of lysine residues. We have been preparing [^{18}F]FBEM as a prosthetic group for specific radiolabeling of cysteine containing proteins (Kiesewetter et al., 2008). The radiochemical synthesis route that we developed for [^{18}F]FBEM was similar to that of [^{18}F]fluoropaclitaxel (Kalen et al., 2007) We acquired a modular radiochemical synthesis system with appropriate complexity to conduct this multistep radiosynthesis from Eckert & Ziegler GmbH. Our initial difficulties with leaking solenoid valves have been ameliorated by prompt flushing of these valves following the conclusion of the synthesis.

In the initial development of the automated synthesis, we evaluated the radiochemical yields of the various steps. The fluoride displacement reaction, which required anhydrous conditions, provided consistent yields that were somewhat lower than that obtained in our manual synthesis (Kiesewetter et al., 2008). The lower yield may be due to the larger reaction vial surface and a more dilute concentration of substrate. We saw this lower yield as an acceptable trade for lower radiation exposure. The removal of the pentamethylbenzyl protecting group with TFA proceeded quickly as expected, but the complete evaporation of this reagent through the large reaction vial and the long length of tubing proved more challenging. We eventually derived an evaporation sequence that removed the vapors sufficiently to allow the second reaction to proceed reliably. The time required was longer than that achieved manually.

The coupling reaction between *N*-(2-aminoethyl)maleimide and 4-[^{18}F]fluorobenzoic acid also required use of larger volumes. In the end the reagent amounts were increased by almost a factor of 2 over those of the manual procedure. Unfortunately, we could not combine diisopropylethyl amine and *N*-(2-aminoethyl)maleimide in the same reagent vial as the maleimide decomposed. We observed that a premixing of the maleimide and diethylcyanophosphonate was possible, but the length of time the solution stood was important. The best and most reliable yields were obtained if the solution was prepared as close as possible to the time the module would add the solution. We accomplished this by going into the cell to change the vial. Placing the vial into the module required less than 30 s when properly executed, but did require entry into the radiation area. Several options were considered; however we believe the best option would be to acquire a system with one more valve to allow separate addition of this reagent.

The HPLC injection was accomplished using the HPLC module of the Eckert & Ziegler GmbH system. The system employs a bubble detector to signal the beginning and completion of the liquid delivery from PRM2. We programmed the system to wait for our manual signal to load the sample onto the injection loop. The operator waits for the end of the liquid flow and can simultaneously observe radioactivity increase on the loop, due to its proximity to the HPLC radioactivity detector, and radioactivity decrease in PRM2. When the liquid passed the bubble meter, the operator pressed a button on the interactive screen to inject the sample onto the column. Operator selected buttons were also programmed to allow selection for peak collection.

This radiochemical synthesis, which involves a three-step sequence, is rather complicated for automation. However, the time required and the radiochemical yields obtained were appropriate for radiolabeling proteins for a large number of small animal imaging studies. The addition of one valve module will allow for the solid phase extraction of [^{18}F]FBEM to be conducted as part of the automated procedure.

5. Conclusion

We have developed an automated radiochemical three-step procedure for the preparation of [^{18}F]FBEM. The reproducibility of the automated method depends on the efficient evaporation of trifluoroacetic acid following the deprotection step and the stability of the mixture of diethylcyanophosphate and *N*-(2-aminoethyl)maleimide. The method provides [^{18}F]FBEM with an uncorrected radiochemical yield of $17.3 \pm 7.1\%$, high radiochemical purity ($>$ 99%), and with a synthesis time of approximately 95 min. The measured specific activity for three batches was 181.3, 251.6, and 351.5 GBq/ μmol at the end of bombardment (EOB).

Acknowledgements

This research was supported by the Intramural Research Program of the National Institute of Biomedical Imaging and Bioengineering, National Institutes of Health. Technical assistance was provided by Eckert & Ziegler Eurotope GmbH for programming suggestions.

References

Becaud, J., et al., 2009. Direct one-step[18]F-labeling of peptides via nucleophilic aromatic substitution. Bioconjug. Chem. 20, 2254–2261.
Berndt, M., Pietzsch, J., Wuest, F., 2007. Labeling of low-density lipoproteins using the F-18-labeled thiol-reactive N-[6-(4-[F-18]fluorobenzylidene)aminooxyhexyl]maleimide. Nucl. Med. Biol. 34, 5–15.
Cai, W.B., Zhang, X.Z., Wu, Y., Chen, X., 2006. A thiol-reactive F-18-labeling agent, N-[2-(4-F-18-fluorobenzamido)ethyl]maleimide, and synthesis of RGD peptide-based tracer for PET imaging of alpha(v)beta(3) integrin expression. J. Nucl. Med. 47, 1172–1180.
de Bruin, B., et al., 2005. 1-[3-(2-[F-18]fluoropyridin-3-yloxy)propyl]pyrrole-2,5-dione: design, synthesis, and radiosynthesis of a new[F-18]fluoropyridine-based maleimide reagent for the labeling of peptides and proteins. Bioconjug. Chem. 16, 406–420.
Kalen, J.D., Hirsch, J.I., Kurdziel, K.A., Eckelman, W.C., Kiesewetter, D.O., 2007. Automated synthesis of F-18 analogue of paclitaxel (PAC): [F-18]Paclitaxel (FPAC). Appl. Radiat. Isot. 65, 696–700.
Kiesewetter, D.O., et al., 2003. Fluoro-, bromo-, and iodopaclitaxel derivatives: synthesis and biological evaluation. Nucl. Med. Biol. 30, 11–24.
Kiesewetter, D.O., Kramer-Marek, G., Ma, Y., Capala, J., 2008. Radiolabeling of HER2-specific affibody (R) molecule with F-18. J. Fluorine Chem. 129, 799–806.
Lang, L.X., et al., 1999. Development of fluorine-18-labeled 5-HT1A antagonists. J. Med. Chem. 42, 1576–1586.
Ogawa, M., et al., 2003. Direct electrophilic radiofluorination of a cyclic RGD peptide for in vivo alpha(v)beta(3) integrin related tumor imaging. Nucl. Med. Biol. 30, 1–9.
Shiue, C.-Y., Wolf, A.P., Hainfeld, J.F., 1988. Synthesis of ^{18}F-Labelled N-(p-[18 F]fluorophenyl)maleimide and its derivatives for labelling monoclonal antibody with ^{18}F. J. Labelled Compd. Radiopharm. 26, 287–289.
Toyokuni, T., et al., 2003. Synthesis of a new heterobifunctional linker, N-[4-(aminooxy)butyl]maleimide, for facile access to a thiol-reactive F-18-labeling agent. Bioconjug. Chem. 14, 1253–1259.
Vaidyanathan, G., Zalutsky, M.R., 2006. Synthesis of N-succinimidyl 4-[F-18] fluorobenzoate, an agent for labeling proteins and peptides with F-18. Nat. Protocols 1, 1655–1661.
Wester, K., Schottelius, M., 2007. Fluorine-18 labeling of peptides and proteins In: Schubiger, P.A., Lehmann, L., Friebe, M. (Eds.), PET Chemistry: The Driving Force in Molecular Imaging. Springer-Verlag, Berlin–Heidelberg, pp. 79–111.
Wuest, F., Berndt, M., Bergmann, R., van den Hoff, J., Pietzsch, J., 2008. Synthesis and application of [F-18]FDG-maleimidehexyloxime ([F-18]FDG-MHO): a [F-18]FDG-based prosthetic group for the chemoselective F-18-labelling of peptides and proteins. Bioconjug. Chem. 19, 1202–1210.