UNITED STATES PATENT AND TRADEMARK OFFICE

BEFORE THE PATENT TRIAL AND APPEAL BOARD

APPLE INC.,

Petitioner,

v.

OMNI MEDSCI, INC.,

Patent Owner.

Patent No. 9,651,533

IPR2019-00916

DECLARATION OF BRIAN ANTHONY, PH. D. REGARDING U.S. PATENT NO. 9,651,533

TABLE OF CONTENTS

I. INTRODUCTION 1

A. Engagement 1

B. Background and Qualifications 1

C. Compensation 5

D. Information Considered 6

II. LEGAL STANDARDS FOR PATENTABILITY 6

A. Anticipation 8

B. Obviousness 9

III. BACKGROUND INFORMATION ABOUT THE ’533 PATENT 11

A. Effective Filing Date of the ’533 Patent 11

B. The Prosecution History of the ’533 Patent 12

C. Technical Field 13

D. Level of Ordinary Skill in the Art 13

IV. TECHNICAL BACKGROUND 14

A. Photoplethysmography 14

B. Industry Trends 21

V. ANALYSIS OF THE ’533 PATENT 29

A. Overview of the ’533 Patent 29

B. Construction of Terms Used in the ’533 Patent Claims 30

VI. IDENTIFICATION OF THE PRIOR ART 34

VII. ANALYSIS OF THE PRIOR ART AND ’533 CLAIMS 34

A. Lisogurski 34

1. Overview of Lisogurski 34

2. Overview of Carlson 37

3. A Person of Ordinary Skill in the Art Would Have Modified Lisogurski to Incorporate Elements Shown in Carlson 38

4. Lisogurski and Carlson Describe the Elements of Claim 13 of the ’533 Patent 41

a) Preamble 42

b) “a wearable measurement device…” 43

c) “the light source configured to increase signal-to-noise ratio” 45

d) “the wearable measurement device comprising a plurality of lenses configured to receive a portion of the output optical beam and to deliver an analysis output beam to a sample” ...59

e) “the wearable measurement device further comprising a receiver configured to receive and process at least a portion of the analysis output beam reflected or transmitted from the sample and to generate an output signal, wherein the wearable measurement device receiver is configured to be synchronized to pulses of the light source” 66

f) “a personal device…” 71

g) “a remote device…” 76

5. Lisogurski and Carlson Describe the Elements of Claim 5 of the ’533 Patent 80

a) Preamble 82

b) “a light source comprising a plurality of semiconductor sources that are light emitting diodes configured to generate an output optical beam with one or more wavelengths, wherein at least a portion of the one or more optical wavelengths is a near-infrared wavelength between 700 nanometers and 2500 nanometers” 82

c) “the light source configured to increase signal-to-noise ratio….” 82

d) “an apparatus comprising a plurality of lenses configured to receive a portion of the output optical beam and to deliver an analysis output beam to a sample” 83

e) “a receiver configured to receive and process at least a portion of the analysis output beam reflected or transmitted from the sample and to generate an output signal, wherein the receiver

is configured to be synchronized to pulses of the light source" 83

f) "a personal device…" 83

g) "a remote device configured to receive over the wireless transmission link an output status comprising the at least a portion of the processed output signal, to process the received output status to generate processed data and to store the processed data." 84

6. Claim 7 84

7. Lisogurski and Carlson Describe the Elements of Claims 8 and 16 86

8. Lisogurski and Carlson Describe the Elements of Claims 9 and 17 89

9. Lisogurski and Carlson Describe the Elements of Claim 10 90

B. Lisogurski, Carlson, and Mannheimer Render Obvious Claims 8-9 and 16-17 90

1. Overview of Mannheimer 90

2. A Person of Ordinary Skill in the Art Would Have Modified Lisogurski and Carlson to Incorporate Elements Shown in Mannheimer 91

3. Claims 8 and 16 93

4. Claims 9 and 17 95

I. INTRODUCTION

A. Engagement

1. I have been retained by counsel for Apple Inc. as an expert witness in the above-captioned proceeding. I have been asked to provide an opinion regarding the patentability of certain claims in U.S. Patent No. 9,651,533 ("the '533 Patent") (Exhibit 1001). The face of the '533 patent identifies Omni MedSci, Inc. ("Omni") as the assignee. I have been asked to provide a discussion of the meaning of certain words and phrases in the claims of the '533 patent, to provide a description of state of the art of the technology described in the '533 patent, and to analyze various references that I understand are prior art to these patents.

B. Background and Qualifications

2. As indicated in my curriculum vitae ("CV"), Ex.1053, I am currently a Principal Research Scientist at the Massachusetts Institute of Technology ("MIT"). My CV includes additional information about my professional history and contains further details on my experience, publications, patents, and other qualifications to render an expert opinion. Below, I highlight some of my experience that is relevant to the technology of the patent at issue.

3. I earned a Bachelor of Science in Engineering from Carnegie Mellon University in 1994 and a Master's degree in Engineering from MIT in 1998. My thesis topic related to anisotropic wave guides and acoustic non-destructive testing.

In 2006, I earned my Ph.D. in Engineering from MIT. My research focused on high-performance computation, signal processing, and electro-mechanical system design.

4. In 1997, I co-founded Xcitex Inc., a company that specialized in video-acquisition and motion-analysis software. I served as the Chief Technology Officer and directed and managed product development until 2006. Our first demo product was an optical ring for human motion measurement used to capture user hand motion in order to control the user's interaction with a computer. Many of the structural elements of our optical ring addressed the same system issues as those described and claimed in the patent at issue. For example, our optical ring included multiple light emitting diodes, multiple photodetectors, techniques for modulation and synchronization, noise reduction algorithms, and optical components for light blocking, light redirection, and light capture, and structural components for holding and geometrically arranging the various components. We estimated human hand-motion based on how that motion changed the detected light. In our application we did not try to eliminate motion artifact, we tried to measure it. In developing our ring, we considered well-known problems such as ambient light and noise, which are, unsurprisingly, also mentioned in the patent at issue. Motion Integrated Data Acquisition System (MiDAS) was our flagship video and data acquisition product which relied upon precise synchronization of

multiple clocks for optical sensor and video acquisition, data acquisition, and external illumination.

5. I joined MIT in 2006 and was the Director of the Master of Engineering in Advance Manufacturing and Design Program for over ten years. The degree program covers four main components: Manufacturing Physics, Manufacturing Systems, Product Design, and Business Fundamentals. Many of the courses, projects, and papers my students undertake involve technologies relevant to the patent at issue, for example, sensor devices including non-invasive optical biosensors.

6. In 2011, I co-founded MIT's Medical Electronic Device Realization Center ("MEDRC") and currently serve as co-director. The MEDRC aims to create and deploy revolutionary medical technologies by collaborating with clinicians, the microelectronics, and medical devices industries. We combine expertise in computation; communications; optical, electrical, and ultrasound sensing technologies; and consumer electronics. We focus on the usability and productivity of medical devices using, for example, image and signal processing combined with intelligent computer systems to enhance practitioners' diagnostic intuition. Our research portfolio includes low power integrated circuits and systems, big data, micro electro-mechanical systems, bioelectronics, sensors, and microfluidics. Specific areas of innovation include wearable, non-invasive and

minimally invasive optical biosensor devices, medical imaging, laboratory instrumentation, and the data communication from these devices and instruments to healthcare providers and caregivers. My experience with these devices is directly applicable to the technology in the patent at issue. For example, in one current project related to this work, we use a patient-mounted mobile near infrared (NIR) camera to image and characterize the surface and subsurface structures of the skin.

7. I am the Associate Director of MIT.nano, MIT's new 200,000 sq-ft nanofabrication and characterization facility and one of the major research initiatives with MIT.nano is on sensors and sensing systems. Our research in sensing science and sensing engineering is targeting innovations in advanced manufacturing, healthcare, environmental remediation, smart infrastructure, and the creation of advanced machines and materials. I also co-founded the Center for Polymer Micro-fabrication at MIT. The Center’s research focuses on polymer-based manufacturing processes and the large-scale commercialization of micro fluidic devices for chemical, biomedical, and photonic applications. My experience under these initiatives is directly applicable to the technology in the patent at issue. We develop optical sensors to noninvasively monitor soft flexible materials during the manufacturing process.

8. Furthermore, my research focuses on computational instrumentation, including the development of instrumentation and measurement solutions for manufacturing systems and medical devices. Additionally, my teaching interests include the design and modeling of large-scale systems in a wide variety of decision-making domains and developing optimization algorithms and software for analyzing and designing such systems. I teach or have taught courses in Electrical Engineering, Controls, Optics, and Signal Processing, all pertinent subject matter to the patent at issue.

9. I have published approximately 85 papers, and have received a number of best paper and distinguished paper awards. I am a co-author of a number of papers that relate to the technology in the patent at issue.

C. Compensation

10. I am being compensated for my time at the rate of $500 per hour for my work in connection with this matter. I am being reimbursed for reasonable and customary expenses associated with my work in this investigation. This compensation is not dependent in any way on the contents of this Declaration, the substance of any further opinions or testimony that I may provide or the ultimate outcome of this matter.

D. Information Considered

11. My opinions are based on my years of education, research, and experience, as well as my investigation and study of relevant materials. In forming my opinions, I have considered the materials I identify in this declaration and those listed in the attached Exhibit List.

12. I may rely upon these materials and/or additional materials to respond to arguments raised by Omni. I may also consider additional documents and information in forming any necessary opinions—including documents that I have not yet identified or may not yet have been provided to me.

13. My analysis of the materials produced in this investigation is ongoing, and I will continue to review any new material as it is provided. This report represents only those opinions I have formed to date. I reserve the right to revise, supplement, and/or amend my opinions stated herein based on new information and on my continuing analysis of the materials already provided.

II. LEGAL STANDARDS FOR PATENTABILITY

14. Certain basic legal principles have been explained to me by counsel for Apple. Below, I have recorded these legal standards as they were explained to me.

15. I understand that for an invention claimed in a patent to be found patentable, it must be, among other things, new and not obvious from what was known before the invention was made.

16. I understand that the effective filing date of the claimed invention is the actual filing date of the claims, unless the applicant claims priority to an earlier filed application that supports the claimed subject matter in the manner required by 35 U.S.C. § 112. I understand that this section requires the patent's specification to contain a sufficient written description of the claimed invention to demonstrate that the applicant actually possessed the invention as of the filing date as broadly as it is claimed. In considering whether this written description requirement is met, I understand that I should consider the written description from the viewpoint of a person of ordinary skill in the art. I also understand that I should consider whether this person of ordinary skill would have recognized that the written description describes the full scope of the claimed invention and that the inventor actually possessed that full scope as of the claimed effective filing date.

17. I understand the information that is used to evaluate whether an invention is new and not obvious is generally referred to as "prior art" and can include patents and printed publications. I also understand that a patent will be prior art if it was filed before the earliest effective filing date of the claimed invention, while a printed publication will be prior art if it was publicly available

before that date. I understand that in this proceeding, the information that may be evaluated to show unpatentability is limited to patents and printed publications.

18. I understand that in this proceeding Apple has the burden of proving that the challenged claims are unpatentable over the prior art by a preponderance of the evidence. I understand that "a preponderance of the evidence" is evidence sufficient to show that a fact is more likely true than it is not.

19. I understand that there are two ways in which prior art may render a patent claim unpatentable. First, the prior art can be shown to "anticipate" the claim. Second, the prior art can be shown to have made the claim "obvious" to a person of ordinary skill in the art.

A. Anticipation

20. I understand that, for a patent claim to be "anticipated" by the prior art, each and every requirement of the claim must be found, expressly or inherently, in a single prior art reference as recited in the claim.

21. I understand that claim limitations that are not expressly described in a prior art reference may still be there if they are "inherent" to the thing or process being described in the prior art.

22. I understand that it can be acceptable to consider evidence other than the information in a particular prior art document to determine if a feature is necessarily present in or inherently described by that document.

23. I understand that if a reference incorporates other documents by reference, the incorporating reference and the incorporated reference(s) should be treated as a single prior art reference for purposes of analyzing anticipation.

24. I understand that to be anticipatory, a reference must not only explicitly or inherently disclose every claimed feature, but those features must also be "arranged as in the claim." Differences between the prior art reference and a claimed invention, however slight, invoke the question of obviousness, not anticipation.

B. Obviousness

25. I understand that a claimed invention is not patentable if it would have been obvious to a person of ordinary skill in the field of the invention at the time the invention was made. I understand that in determining whether a patent claim is obvious, one must consider the following four factors: (i) the scope and content of the prior art, (ii) the differences between the prior art and the claims at issue, (iii) the knowledge of a person of ordinary skill in the pertinent art; and (iv) objective factors indicating obviousness or non-obviousness, if present (such as commercial success or industry praise).

26. I understand the objective factors indicating obviousness or non-obviousness may include: commercial success of products covered by the patent claims; a long-felt need for the invention; failed attempts by others to make the

invention; copying of the invention by others in the field; unexpected results achieved by the invention; praise of the invention by those in the field; the taking of licenses under the patent by others; expressions of surprise by experts and those skilled in the art at the making of the invention; and the patentee proceeded contrary to the accepted wisdom of the prior art. I also understand that any of this evidence must be specifically connected to the invention rather than being associated with the prior art or with marketing or other efforts to promote an invention. I am not presently aware of any evidence of "objective factors" suggesting the claimed methods are not obvious, and reserve my right to address any such evidence if it is identified in the future.

27. In addition, I understand that the obviousness inquiry should not be done in hindsight, but must be done using the perspective of a person of ordinary skill in the relevant art as of the effective filing date of the patent claim.

28. I understand that the Supreme Court has rejected a rigid approach to determining the question of obviousness, such as one that requires a challenger to identify a "teaching, suggestion, or motivation to combine" known elements. Instead, a challenger needs to articulate reasoning for combining known elements. Such reasoning can be based on design considerations, market demands, looking to solutions to related problems in related fields, and on the "ordinary innovation" and creativity that would be applied by a person of ordinary skill in the art.

29. I understand that an invention that might be considered an obvious variation or modification of the prior art may be considered non-obvious if one or more prior art references discourages or leads away from the line of inquiry disclosed in the reference(s). A reference does not "teach away" from an invention simply because the reference suggests that another embodiment of the invention is better or preferred. My understanding of the doctrine of teaching away requires a clear indication that the combination should not be attempted (*e.g.*, because it would not work or explicit statements saying the combination should not be made).

III. BACKGROUND INFORMATION ABOUT THE '533 PATENT

A. Effective Filing Date of the '533 Patent

30. The '533 patent is titled "Short-wave infrared super-continuum lasers for detecting counterfeit or illicit drugs and pharmaceutical process control." It issued from U.S. Application No. 14/875,709, filed on October 6, 2015, and claims priority to U.S. provisional application No. 61/747,487 ('487 Provisional)), filed on December 31, 2012, and the benefit of U.S. Application No. 14/108,986 ('986 Application), filed on December 17, 2013.

31. I have reviewed the '487 Provisional and do not believe that it supports the claims of the '533 patent in the manner required by 35 U.S.C. § 112. The '487 Provisional does not describe a measurement device that communicates with a personal device, where the personal device wirelessly transmits data to a

remote device for further processing as required by independent claims 5 and 13. The provisional describes a detection system that can send data to "a computational system, comprising computers or other processing equipment," but there is no disclosure that the computing system can send data it has processed to a remote system for additional processing. Ex.1015, [0066], [0074] (describing a computer system 1811). The provisional also describes a camera that can wirelessly interface with a computer, table, or smartphone, but there is no disclosure of those devices sending the camera data to a remote device. Ex.1015, [0068]. Claim 7 further specifies that "the remote device is capable of transmitting information related to a time and a position associated with the at least a portion of the processed data." The provisional contains no disclosure of any device transmitting a time and a position. Nor does the provisional describe any device transmitting data to a doctor, healthcare provider, or a cloud-based server as specified in claim 7. It is therefore my opinion that the provisional application does not demonstrate that the inventor was in possession of a device with these elements of the claims.

B. The Prosecution History of the '533 Patent

32. The original claims that became Claims 5 and 13 did not recite LEDs as the light source, lenses, how the light source was configured to increase signal-to-noise ratio or synchronizing the receiver to the light source. Ex.1002 (FH) at

114-118, 499-504, 759-764. The Examiner rejected those original claims as obvious over the prior art, Ex.1002 (FH) at 343-355, and maintained that rejection after the claims were amended to recite the first three of those elements. Ex.1002 (FH) at 717-728. The patentee then added the limitation that the receiver "is configured to be synchronized to the light source," and the claims were allowed. Ex.1002 (FH) at 756, 759-764, 777-785.

C. Technical Field

33. The '533 patent generally relates to optical sensors and devices that use optical sensors for measurement of physiological signals or biological parameters.

D. Level of Ordinary Skill in the Art

34. I have been instructed that the claims of a patent are to be reviewed from the point of view of a hypothetical person of ordinary skill in the art at the time of the filing of the patent.

35. Based on my knowledge and experience, it is my opinion a person of ordinary skill in the art at the relevant timeframe would have been a person with a good working knowledge of optical sensing techniques and their applications, and some familiarity with optical system design and signal processing techniques. That knowledge would have been gained via an undergraduate education in engineering (electrical, mechanical, biomedical or optical) or a related field of

study, along with relevant experience in studying or developing physiological monitoring devices (e.g., non-invasive optical biosensors) in industry or academia. This description is approximate; varying combinations of education and practical experience also would be sufficient.

36. Well before December 2012, my level of skill in the art was at least that of a person of ordinary skill in the art in the field of the ’533 patent, as discussed above. I am qualified to provide opinions concerning what a person of ordinary skill in the art would have known and understood at that time. In preparing this declaration, I have considered the issues from the perspective of a hypothetical person of ordinary skill in the art at the relevant timeframe.

IV. TECHNICAL BACKGROUND

A. Photoplethysmography

37. The use of optical sensors to detect physiological parameters, including photoplethysmography, has been known for decades. Optical techniques are commonly used in medical monitoring systems such as pulse oximetry systems that measure a person’s pulse rate and blood oxygen saturation. Ex.1019 (Biomedical Engineering Handbook 1995) at 769-76, 1346-55 (discussing oximetry and other applications).

38. Photoplethysmography works by directing light into a person’s tissue and measuring the light that is reflected back from or transmitted through the

tissue. Ex.1019 (Biomedical Engineering Handbook) at 764. Different components of blood or tissue absorb different wavelengths of light. By measuring how much light is absorbed by the tissue and how the absorption changes over time, a device can calculate parameters that are related to the properties of the tissue.

39. For example, hemoglobin (the protein molecule in blood that carries oxygen to cells) reflects more red light when it is more oxygenated than when it is deoxygenated; it absorbs more red light when it is deoxygenated. Ex.1019 (Biomedical Engineering Handbook) at 769. Hemoglobin reflects the same amount of infrared (IR) light whether oxygenated or deoxygenated. Ex.1019 (Biomedical Engineering Handbook) at 769. If a device measures the absorbed red and IR light multiple times per second, the device can determine several things: (i) the ratio of oxygenated to deoxygenated hemoglobin (oxygen saturation), and (ii) how the volume of blood in the tissue changes, allowing it to detect a person's pulse. Ex.1019 (Biomedical Engineering Handbook) at 769, 771.

40. Photoplethysmography is an optical technique, and it uses basic optical components or building blocks. The "basic building blocks" of optical sensor systems include lenses, mirrors, reflective surfaces, filters, beam splitters, light sources, fiber optics, light detectors, and other passive components and

various active components to convert light signals to electrical signals. Ex.1019 (Biomedical Engineering Handbook) at 765.

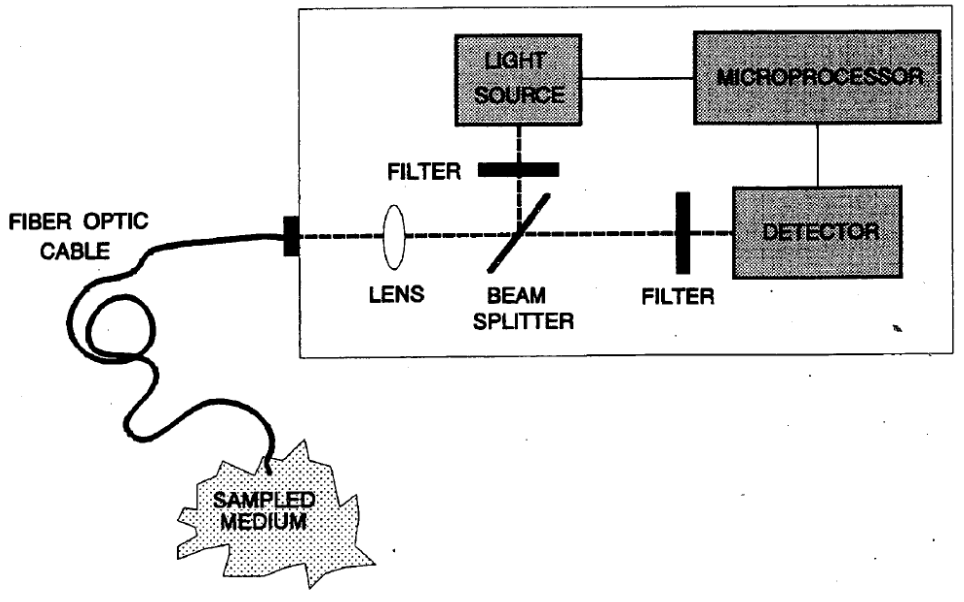

FIGURE 52.1 General diagram representing the basic building blocks of an optical instrument for optical sensor applications.

Ex.1019 (Biomedical Engineering Handbook) at 765. In portable devices, the light sources are typically light emitting diodes (LEDs) because they are small and have low power requirements. Ex.1019 (Biomedical Engineering Handbook) at 765. LEDs are manufactured with a wide range of packaged form factors and are easily assembled into systems with standard circuit board assembly processes; surface mount technology (SMT) is widely used to mount the LED packages for practical application.

41. The light from the light sources is directed through a lens and onto a sample. Ex.1019 (Biomedical Engineering Handbook) at 765. The sample, or

tissue, reflects back the light, which is filtered and sensed by a photodetector. Ex.1019 (Biomedical Engineering Handbook) at 765. The photodetector outputs a signal proportional to the measured light intensity, which is the measurable amount of light (number of photons), and then analog-to-digital conversion and signal processing are performed to extract data. Ex.1019 (Biomedical Engineering Handbook) at 766.

42. Photodetectors are devices used for the detection of light and conversion into an electrical signal. There are many types of photodetectors which may be appropriate in a particular case, depending on the application, design intent, and design constraints, a photodetector and photodetector-based measurement system has to satisfy. For example, it must be sensitive in (be able to detect) some given spectral region (range of optical wavelengths). The detector must be suitable for some range of optical powers. The size of the active area of a detector can be important, *e.g.*, divergent or scattered light require larger active areas. For detecting pulses of light, the timing precision may be of interest so that the photodetector and measurement system can detect when the pulses of light are triggered. After detection of a pulse, some detectors may have a “dead time” during which they are not active. The pulses of light and the detection of pulses of light are synchronized by operating from a common clock, and therefore have a common time base, or may operate from different clocks and are then

synchronized based on knowledge of the characteristics or nature of the timing of transmitted light with various techniques, phase-locked (lock-in) amplifiers being one example.

43. Different types of detectors require different levels of complexity in the system electronics. Penalties in terms of size and cost may result. Size, sensitivity, efficiency, speed of response, and cost tradeoffs are made for any applications. Photodiodes are semiconductor devices with a p–n junction or p–i–n structure ("p" (positive) side contains an excess of holes, while the "n" (negative) side contains an excess of electrons "i" is the intrinsic material), where light is absorbed in a depletion region and generates a photocurrent. Such devices can be very compact, fast, highly linear, and possess high quantum efficiency (generate nearly one electron per incident photon) and a high dynamic range, provided that they are operated in combination with suitable electronics. Phototransistors are similar to photodiodes, but exploit internal amplification of the photocurrent. Photoresistors are also based on certain semiconductors. They are cheaper than photodiodes, but they are generally slower, not as sensitive, and exhibit a strongly nonlinear response.

44. The detected signal may include signal and noise from, for example, ambient light or motion induced artifacts. There are various well-known techniques used to reduce the amount of noise in the detected signal and improve

the signal-to-noise ratio. For example, the light source is often modulated, which improves signal detectability and therefore serves to improve the signal-to-noise ratio. Ex.1019 (Biomedical Engineering Handbook) at 764. The detector uses synchronized lock-in amplifier detection to isolate signals that occur at the modulation frequency to improve signal-to-noise ratio by extracting information encoded at the modulation frequency thereby reducing the impact of noise at other frequencies in the detected signal. Ex.1019 (Biomedical Engineering Handbook) at 766.

45. Modulation is a standard technique to enhance the detectability of signal in noise. Ex.1019 (Biomedical Engineering Handbook) at 764. The goal is to encode and then detect or extract the information in the modulated signal. Modulation can be periodic or aperiodic. A receiver receives the modulated signal, which is composed of carrier and information signals, then detects or extracts the information from the modulated signal. This is called demodulation. How information is detected depends on the modulation techniques used. Examples of analog modulation techniques include amplitude modulation (AM) and frequency modulation (FM). A lock-in amplifier is a type of amplifier that can extract a signal with a known or detected carrier frequency from an extremely noisy environment. Pulsed and digital modulation techniques include amplitude-shift keying (ASK), frequency-shift keying (FSK), and phase-shift keying (PSK). Each

modulation technique has its own pros and cons and needs to be considered in context of an entire measurement system. Different modulation schemes can be used to simultaneously transmit information from multiple transmitters through a single physical medium (e.g. wire, space, water, tissue). Frequency division multiplexing (FDM) is a technique for sending two or more signals over the same telephone line, radio channel, or other medium. The signal associated with separate information channel is transmitted as a unique range of frequencies within the broader frequency bandwidth of the physical channel as a whole, enabling several lines of communication to be transmitted simultaneously. Time-division multiplexing (TDM) is a technique of transmitting and receiving independent signals over a common signal path by means of synchronized switches. Each signal appears on the line only a fraction of time in an alternating pattern. Code division multiplexing (CDM) is a multiplexing technique that uses spread spectrum communication. In spread spectrum communications, a narrowband signal is spread over a larger band of frequency or across multiple channels. In Code Division Multiple Access (CDMA), each transmitter or information channel is given a unique code and individual conversations are encoded in a digital sequence.

46. LED packages are typically molded with polymer plastic materials. *See generally* Ex.1035 (Light Emitting Diodes), 97-98, 191-99. Encapsulants and

lens materials of LEDs are of high transparency, high refractive index, chemical stability, high temperature stability, and hermeticity to enhance the extraction of light into free space as well as reliability performance. A lens is an optical element (or optical components) that focuses or otherwise modifies the direction of propagation of light. A lens is often a transparent material with curved surfaces for concentrating or dispersing light rays. High power LEDs may use a plastic lens as well as an encapsulant. Silicone retains mechanical softness in its cured state, the silicone encapsulant is enclosed in a plastic cover that serves as a lens to give mechanical protection. The plastic lenses control the angular projection and direction of the light cone from the LEDs into the next optical component of an optics system or into free space.

47. Components such as mirrors, beam splitters, and optical fibers are used to control and change the direction of light paths or to split light sources into multiple paths in order to create reference for relative measurements.

B. Industry Trends

48. In the 2000 to 2012 time-frame, several market trends were pushing the medical device and semiconductor industries to develop wearable sensor devices that could communicate data to remote devices. During that time, there was a push to develop remote monitoring technology to allow more cost-effective and widespread medical care to be provided to remote populations or for

monitoring in the home environment. Ex.1021 (Patel) at 2; Ex.1024 (BLE), 462; Ex.1027 (EU Report) at 15-31. Along with advances in the miniaturization of electronics and in communication technology, these trends led to the development of many remote, wearable monitoring systems. Ex.1021 (Patel) at 3.

49. During that time frame, there was also a push to bring heart rate sensing devices to consumers for personal fitness tracking and other wellness related uses. Ex.1009 (Carlson), [0004] ("Pulsoximetry measuring devices are also used in sports for control and survey of athletes."); Ex.1005 (LeBoeuf2012/0197093), [0003] ("There is growing market demand for personal health and environmental monitors, for example, for gauging overall health, fitness, metabolism, and vital status during exercise, athletic training, work, public safety activities, dieting, daily life activities, sickness, and physical therapy."); Ex.1020 (FitnessCoach), 3 ("A multitude of commercial health devices and sensors, such as oximeters and heart rate monitors, formerly reserved for professional use, are now available and can be connected to smartphones. GPS watches, pedometers and heart rate monitors, allow recording and tracking of physical activity."); Ex.1027 (EU Report) at 33 ("For many sport enthusiasts measuring body functions and storing the results of sports activities has become integrative part of their training. Emerging social computing communities and web 2.0 now enable people engaging in different sports to exchange their experiences,

tips and warnings."), 35; Ex.1029 (Sensor Mania), 221 ("Wristband sensors are a predecessor to smartwatches and remain a successful product category on their own… Current examples…. feature accelerometry and include the Nike Fuelband ($149, monitoring steps taken), the Jawbone UP wristband and iPhone app ($99, tracking steps taken, distance, calories burned, pace, intensity level, active versus inactive time, and GPS), the Adidas MiCoach ($70, providing heart rate monitoring, real time digital coaching, interactive training, and post-workout analysis of pace, distance, and stride rate)… Other sensor platforms also focus on fitness and athletic training…").

50. This includes systems which monitor heart rate changes resulting from athletic activity and non-athletic activity and provides information based on the monitored activity. Such systems may be used to encourage individuals to participate, for example, in athletic activities to improve their fitness levels. This is accomplished by using activity monitoring techniques that provide incentives and social, or individual goal, oriented motivation for users to engage in athletic activities. Such "activity monitoring environments" may be customized based on factors derived from a user's behavior, and athletic activity, and are used to improve the user's performance. Ex.1031 (Hoffman); Ex.1032 (Hjelt). Accordingly, there was a general motivation in the field to integrate medical

optical sensing techniques into wearable and mobile consumer devices for fitness, wellness, and heath uses.

51. The above trends and the advances in the miniaturization of electronics and communication technology led to the development of many wearable monitoring systems for mobile and fitness applications. Ex.1021 (Patel), 3; Ex.1020 (FitnessCoach), 2 ("Advances in the miniaturization of (inertial) sensing technology, along with the increasing availability of smartphones as a sensing platform, have given rise to many commercial appliances, apps, and general academic interest into people's physical activity.").

52. The continuous and rapid development of mobile phone and computing technology over this same period allowed mobile wearable device technology to be rapidly developed and deployed. Ex.1021 (Patel) at 4; *see* Ex.1023 (Adil) at 5 (One of "the biggest usage of tablets stems from… Patient monitoring and data collection…, includ[ing] using the Bluetooth enabled sensor devices and Wi-Fi+ Bluetooth enabled interfaces to patient monitoring devices, to medical instruments that can transmit information to the tablet when in the vicinity."); Ex.1027 (EU Report) at 41. The global market trend in the medical industry was to use apps and smartphones to deliver care. Ex.1027 (EU Report) at 9-10, 40-49; Ex.1023 (Adil) at 1-2 ("Doctors and nurses were the early adopters of tablets"). It also led to the prevalent use of cloud-based data transfer and storage

of data. Accordingly, there was a general motivation in the field to design wearable devices that interface with smartphones and tablets.

53. The architecture, and vendor or application specific variations, of these sports and remote/mobile monitoring systems was well-known by 2012. An example of the architecture is depicted below:

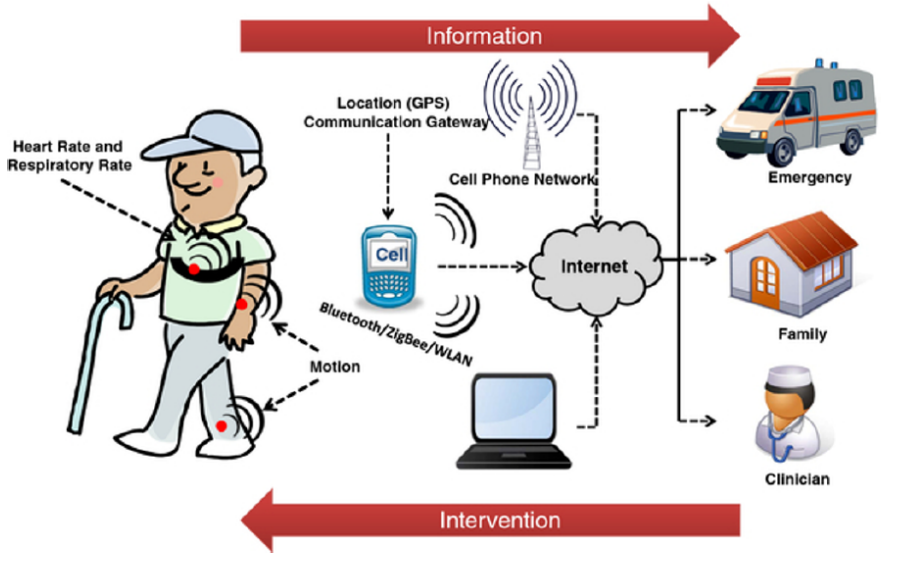

Figure 1 Illustration of a remote health monitoring system based on wearable sensors. Health related information is gathered via body-worn wireless sensors and transmitted to the caregiver via an information gateway such as a mobile phone. Caregivers can use this information to implement interventions as needed.

Ex.1021 (Patel) at 2. Data from wearable sensors is transmitted to a cell phone (or another mobile device worn or kept close to the individual). On the cell phone or mobile device, the data may be processed or preprocessed with the intent of filtering out noise, reducing data size via compression or processed with the intent of feature extraction or identification. The cell phone or mobile device in turn transmits the raw or processed data, along with GPS information over the internet (or other communication medium) to remote devices, such as another computer on

the network for further data analysis (*e.g.*, further extraction of features of the data, comparing those features to trends for the individual or comparing features of the data to norms for a population of similar individuals). Such remote network/internet connected devices are used to review the data by either by a clinician, family member, or emergency care provider. The data can also be transmitted to and stored in the cloud. Ex.1021 (Patel) at 4.

54. Another example of known architecture for sports and remote/mobile monitoring systems is shown below:

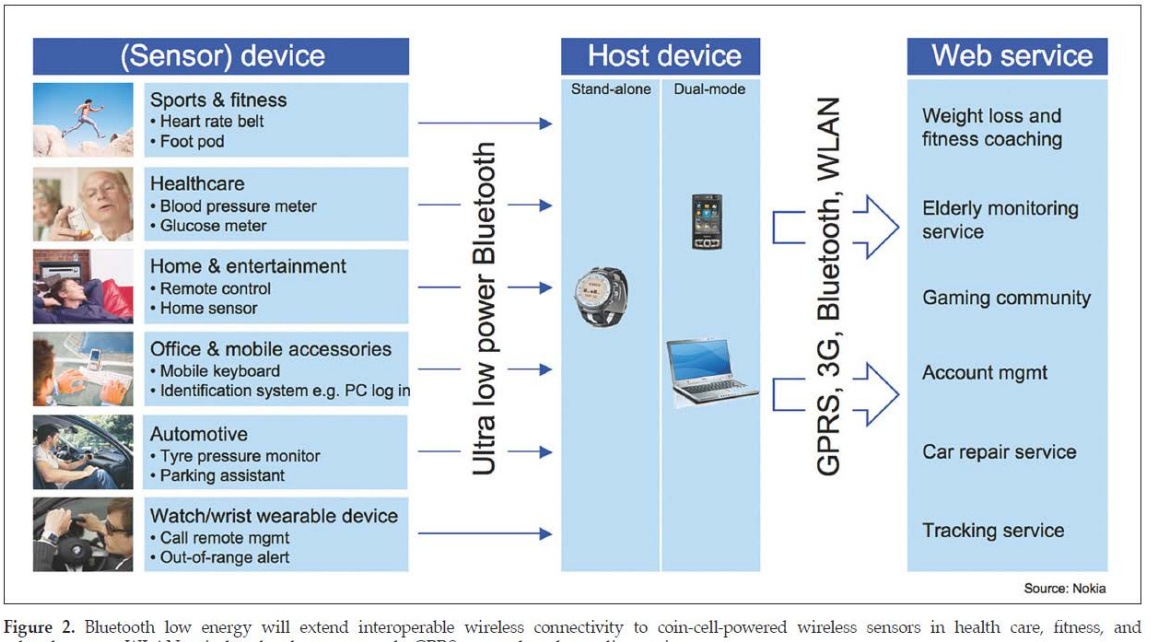

Figure 2. Bluetooth low energy will extend interoperable wireless connectivity to coin-cell-powered wireless sensors in health care, fitness, and related sectors. WLAN, wireless local area network; GPRS, general packet radio service.

Ex.1024 (BLE), 460. In this set up, the medical data can be sent from a wireless sensor device to a host device (*e.g.*, smart phone or computer) and then to a remote service (*e.g.*, physician). Ex.1024 (BLE), 459.

55. Another example of known architecture implemented for a fitness application is shown below:

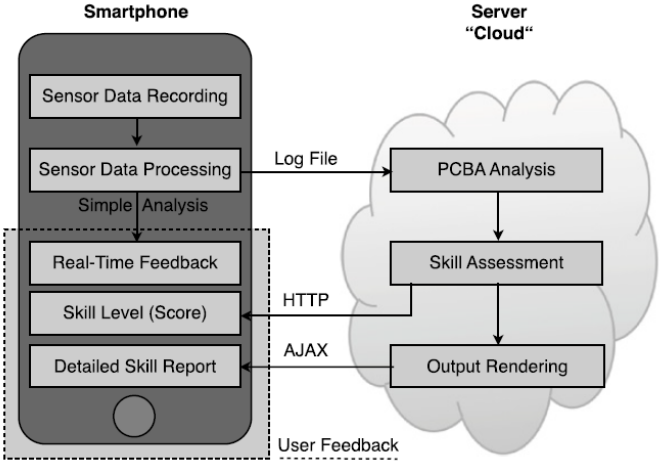

(a) Iteration 1: the smartphone records sensor data during exercising, which are processed by a server after the training to generate skill assessment.

Ex.1020 (Fitness Coach), 7. A smartphone records and processes sensor data and sends the raw or processed data to a cloud server for further processing. The cloud server then returns the processed data back to the smartphone, which displays the data, and extracted information, to the user. Ex.1020 (Fitness Coach), 7, 6 ("The logged information is sent to a server, where the automatic analysis is performed… [to determine] the user's skill. The calculated skill level sent back to the mobile phone.]"), 12 ("GymSkill is a representative example for future mobile interactive applications that incorporate activity recognition…"). It was known in the art that this type of system could be used with heart rate monitors and optical sensors. Ex.1020 (Fitness Coach), 12 ("Coupling with devices like heart rate monitors using

e.g. ANT+ further would increase the sensed database and allow for further, more detailed physical and physiological assessments.”).

56. This same basic architecture had been known for decades. For example, a 1995 textbook depicted a similar architecture for a remote monitoring system based on wired technology:

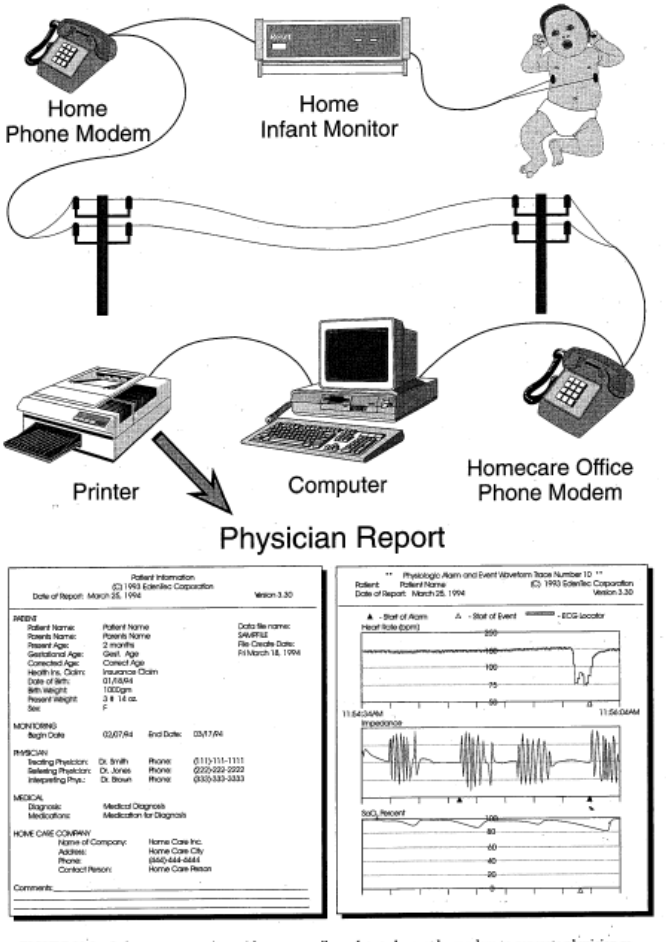

FIGURE 89.3 Infant apnea monitor with memory allows data to be sent by modem to generate physician report (drawing courtesy of EdenTec Corporation).

Ex.1019 (Biomedical Engineering Handbook) at 1363. Similar to the wireless version, in this system, data from a worn sensor is transmitted to a monitoring instrument (*e.g.*, home infant monitor). The monitoring instrument may process or

pre-process the received data with the intent of filtering for noise, reducing data size via compression or with the intent of feature extraction or identification. The monitoring instrument transmits the raw or processed data over the wired network to another computer on the network for further data analysis, for example, further extraction of features of the data, comparing those features to trends for the individual or comparing features of the data to norms for a population of similar individuals. The user interfaces and displays of the remote computer (or a printed report printed from a printer connected to the remote computer) are used to review the received data.

V. ANALYSIS OF THE ’533 PATENT

A. Overview of the ’533 Patent

57. The ’533 patent generally describes optical sensors and systems for using such sensors (for measurement of chemical properties or physiological signals).

58. The challenged ’533 claims recite known features of prior art optical sensor systems, such as photoplethysmography systems, and combine those features in known configurations.

59. The ’533 specification provides little description of the claimed elements. For example, the specification uses the terms “modulation,” “lock-in techniques,” and “synchronized” detection, but it does not explain what those

terms mean or how to implement such functionality. Ex.1001, 16:54-65. These concepts were well-known of skill in the art at the time, and these terms are not used in a manner inconsistent with the understanding of a person of ordinary skill in the art.

B. Construction of Terms Used in the ’533 Patent Claims

60. I understand that the parties have agreed in a related district court proceeding that all of the terms in the asserted claims, except for three, should be given their plain and ordinary meaning to a person of ordinary skill in the art. I understand that the plain and ordinary meaning should be determined in the context of the intrinsic record of the patent, including the claims, specification and the prosecution history, as well as any relevant extrinsic evidence of record. I also understand that when a patent applicant provides an explicit definition of a claim term in the specification, that definition may control the interpretation of that term in the claim.

61. I have been informed that the parties disagree over the meaning of the following three claim terms, and that the district court has provided preliminary constructions for these terms as follows:

“Beam”	**Apple**: Photons or light transmitted to a particular location in space.
	Omni: Photons or light transmitted to a location in space, which may be modulated or unmodulated, and which may or may not contain information.

	District Court: Photons or light transmitted to a particular location in space. A beam does not include randomly directed light. A beam is not necessarily collimated or focused.
"*a plurality of lenses*"	**Apple**: a plurality of transparent surfaces used to collimate (make parallel) or focus rays of light.
	Omni: No construction needed. Plain and ordinary meaning.
	District Court: Plain and ordinary meaning. Reject "used to collimate (make parallel) or focus rays of light." Reject that a lens can be other than transparent.
"*pulse rate*	**Agreed**: Number of pulses of light per unit of time

62. It is my opinion that the term "*beam*" as it is used in the asserted claims would be understood by a person of ordinary skill in the art to mean photons or light transmitted to a particular location in space. The claim term "beam" is expressly defined in the specification to "refer to photons or light transmitted to a particular location in space." Ex.1001, 8:24-26. The definition is also consistent with extrinsic evidence defining a "beam" to mean "a collection of nearly parallel rays." Ex.1047 at 106; *see also* Ex.1042 at 1. A beam is not comprised of scattered or randomly directed light. As the '533 patent seems to recognize, a collection of nearly parallel rays would necessarily travel to a particular location in space, as opposed to scattering in different directions. Ex.1001, 7:53-56 (distinguishing a beam from "stray light from a reflection or scattering"), 20:62-65 (directing an array of beams), (3:34-40) (delivering a beam to a sample).

63. Based on this intrinsic and extrinsic evidence, as well as my own knowledge and experience, it is my opinion that a person of ordinary skill in the art would have understood the term "beam" as used in the asserted claims to mean photons or light transmitted to a particular location in space. This is the definition I use in this declaration when comparing the prior art to the claims. I have also considered the prior art in light of the definitions offered by Omni and by the district court, and it is my opinion that the prior art discloses a "beam" regardless of which definition is used.

64. It is my opinion that the term "*a plurality of lenses*" as it is used in the asserted claims would be understood by a person of ordinary skill in the art to mean one or more transparent surfaces used to collimate (make parallel) or focus rays of light. There is only one type of lens described by the '533 patent, and that is one that will "collimate or focus the light." Ex.1001, 18:46-49; 20:25-26.. Collimate means to make parallel. In addition, the claims require the lenses to be configured to perform certain functions, including receiving and delivering a portion of the input optical beam received from the LEDs to tissue. In order to perform these claimed functions, the lens must be transparent to the received light so that it can pass through the lens and travel to the tissue. And, in order to deliver a portion of a beam to tissue as required by the claim, the lens must collimate or

focus the light, rather than scatter it. These functions of the claimed lens are consistent with the Merriam Webster's Collegiate Dictionary definition of lens:

> a piece of transparent material (as glass) that has two opposite regular surfaces either both curved or one curved and the other plane and that is used either singly or combined in an optical instrument for forming an image by focusing rays of light.

Ex.1046 at 712; Ex.1041 at 481 ("[a] piece of glass or other transparent material").

65. Based on this intrinsic and extrinsic evidence, as well as my own knowledge and experience, it is my opinion that a person of ordinary skill in the art would have understood that "*a plurality of lenses*" as used in the asserted claims would be construed to mean a plurality of transparent surfaces used to collimate (make parallel) or focus rays of light. This is the definition I use in this declaration when comparing the prior art to the claims. I have also considered the prior art in light of definitions offered by Omni and by the district court, and it is my opinion that the prior art discloses "*a plurality of lenses*" regardless of which definition is used.

66. Based on this intrinsic and extrinsic evidence, as well as my own knowledge and experience, it is my opinion that a person of ordinary skill in the art would have understood that "*pulse rate*" means "number of pulses of light per unit of time." The specification describes the pulse repetition rate of a light source and measuring the pulsed output rate using Hertz. Ex.1001, 21:55-59 ("a pulse repetition rate between one kilohertz to about 100 MHz or more"), 25:65-26:1.

Hertz is the International System of Units unit for frequency or number of cycles per second. Considering this knowledge in the context of the specification, a person of ordinary skill in the art would have understood this term to refer to pulses of light per unit of time.

VI. IDENTIFICATION OF THE PRIOR ART

67. ***Exhibit 1011 (Lisogurski)*** is a copy of U.S. Patent No. 9,241,676, titled "Methods and Systems for Power Optimization in a Medical Device." Lisogurski was filed on May 31, 2012 and issued on January 26, 2016. I understand it is prior art to the challenged claims.

68. ***Exhibit 1009 (Carlson)*** is a copy of U.S. Patent Pub. 2005/0049468, titled "Increasing the Performance of an Optical Pulsoximeter." Carlson was published on March 3, 2005. I understand it is prior art to the challenged claims.

69. ***Exhibit 1008 (Mannheimer)*** is a copy of U.S. Patent No. 5,746,206, titled "Isolated Layer Pulse Oximetry." Mannheimer was filed on June 10, 1996 and issued on May 5, 1998. I understand it is prior art to the challenged claims.

VII. ANALYSIS OF THE PRIOR ART AND '533 CLAIMS

A. Lisogurski

1. Overview of Lisogurski

70. Lisogurski describes a portable physiological monitoring system that uses an optical sensor to measure a person's pulse rate and oxygen saturation.

Ex.1011 (Lisogurski) at 3:66-4:5. The system includes a sensor, a monitor, and remote devices such as a server. Ex.1011 (Lisogurski) at 11:28-32, 15:43-48.

71. Lisogurski explains that the sensor can be worn in various locations, such as on a fingertip, toe, forehead or earlobe, or in the case of a neonate, across a foot, Ex.1011 (Lisogurski) at 4:6-8, or also at the neck, wrist, ankle. Ex.1011 (Lisogurski) at 4:15-20. Lisogurski explains that some locations may be more suitable for pulse pressure measurement and others may be more suitable for oxygen saturation measurement. A person of ordinary skill in the art would understand that different body locations may require different form factors such as modifications to the size, geometrical arrange of components yet the principal of operation would remain the same. Locations that are typically exposed such as the face would require different mounting, structural and aesthetics considerations than a location that is typically covered. Different locations on the body experience different patterns and magnitudes of motion and would also require different amounts of noise rejection or motion rejection yet the principal of operation would remain the same.

72. The sensor can include several light emitting diodes (LEDs) and photodetectors. Ex.1011 (Lisogurski) at 17:37-45, 10:48-63, 11:9-13. A person of ordinary skill in the art would understand the value of include several emitters and detectors for creating redundancy and therefore being more tolerant to faults or

unexpected use, improving signal-to-noise ratio (SNR). Making measurement at several wavelengths further enable the ability that can extract properties as a function of wavelength. One of the LEDs uses infrared light with a wavelength between 800 nm and 1000 nm. Ex.1011 (Lisogurski) at 10:52-58.

73. Lisogurski explains that the brightness of the LEDs can be varied. This variation can be achieved by turning the lights on and off, or by making the LEDs brighter and then less bright. (e.g., by varying the amplitude of their power source or by varying the duty-cycle of the power source). Ex.1011 (Lisogurski) at 7:38-40, 8:27-45, 12:23-41. Lisogurski describes a light drive signal, which is the electric current provided to the LEDs that turns them on and determines their brightness. Ex.1011 (Lisogurski), 11:38-41, 11:50-54, 25:52-55. For a particular LED, the emitted light intensity increases as a higher current is applied.

74. The light is passed into a person's tissue, reflected by or transmitted through it, and then detected by a detector, which applies signal processing techniques to isolate the signal.

75. Lisogurski explains that the light drive parameters (*e.g.*, brightness, duty cycle, firing rate) can be varied to adapt to changes in the environment, which allows the signal-to-noise ratio of the device to be increased when interference is encountered. Ex.1011 (Lisogurski) at 5:55-61, 9:46-52, 27:44-49. For example,

Lisogurski describes several modulation schemes that can be used to vary these parameters. Ex.1011 (Lisogurski) at 5:25-6:9.

76. A control algorithm may adjust drive signal brightness, to compensate for ambient light variation, every several seconds. Ex.1011 (Lisogurski) at 5:55-67. It may be beneficial to acquire more measurements in a period of time in order to implement an averaging scheme and to be less sensitive to high frequency motion artifact or changing ambient light, or to be more responsive if activity levels of the user increased.

77. The modulations of the light drive signal and the detector measurement sampling rate may be synchronized. The system may sample the received signal at a low rate during a period of low light output and at a high rate during a period of high light output or in a subset of this approach, may only sample when the light is high and not at all when low. Ex.1011 (Lisogurski) at 10:33-34.

2. Overview of Carlson

78. Carlson describes a wearable pulse oximeter that can be worn on parts of the human body, such as the ear, finger, or toe. Ex.1009 (Carlson), [0052], [0078]. The device uses a conventional sensor that emits optical wavelengths in the red (*e.g.*, 660 nm) and infrared (*e.g.*, 800 to 1000 nm) ranges and detects light that has been transmitted or reflected. Ex.1009 (Carlson), [0003], [0050], [0052].

The device is mobile and can wirelessly transmit data to a doctor or hospital. Ex.1009 (Carlson), [0072], [0077]-[0078].

79. Carlson notes that while sensors can be used in telemedicine, athletics, and other mobile applications, these standard sensors "suffer from signal instability and insufficient robustness versus environmental disturbances." Ex.1009 (Carlson), [0004]. Carlson states that it describes potential solutions to these issues, explaining various techniques for "increasing the technical performance of pulsoximetry in terms of quality and robustness of the measurement signal versus environmental disturbances and energy consumption." Ex.1009 (Carlson), [0002]. For example, Carlson describes techniques for increasing signal-to-noise ratio to account for environmental conditions, such as sunlight, shadow, artificial light, etc. Ex.1009 (Carlson), [0010].

3. A Person of Ordinary Skill in the Art Would Have Modified Lisogurski to Incorporate Elements Shown in Carlson

80. A person of ordinary skill in the art would have considered making modifications to the systems described in Lisogurski based on Carlson.

81. Lisogurski describes a PPG system that is designed to optimize power consumption. Ex.1011 (Lisogurski) at 1:4-6, 3:50-53. Lisogurski's system allows "for increased battery life in portable systems or for increased portability." Ex.1011 (Lisogurski) at1:16-18. For example, Lisogurski explains that its

techniques could improve oximeter systems by reducing power requirements, which would allow for smaller devices or longer life. Ex.1011 (Lisogurski) at 4:63-67. Lisogurski describes several techniques for increasing the signal-to-noise ratio of the signals measured by its devices while minimizing power consumptions. Ex.1011 (Lisogurski) at 9:46-52, 14:50-55, 37:8-11.

82. Based on my knowledge and experience, a person of ordinary skill in the art reading Lisogurski would have considered other references that explained techniques for improving the operation of portable optical sensing systems, particularly those with wearable sensors. Such a person would recognize that improvements to these systems involve trade-offs, such as adding a sensor component to improve detection could also increase the size of the device. It was part of the ordinary design process to characterize the positive and negative attributes of the many ways to improve the operation of a device by comparing and selecting or combining, different designs and techniques.

83. Based on my knowledge and experience, a person of ordinary skill in the art would have looked to Carlson, which is a reference that describes techniques for improving pulse oximetry devices by improving both signal measurement and energy consumption. Ex.1009 (Carlson), [0002]. These techniques include processes and structures for increasing the signal-to-noise ratio, even where optical conditions of the environment are changing. Ex.1009

(Carlson), [0010]. The techniques are energy efficient and can be used in devices that are battery-powered. Ex.1009 (Carlson), [0048]. Carlson explains that its techniques can be used in hospital devices used at and also mobile monitoring devices used in telemedicine. Ex.1009 (Carlson), [0004]. In addition, Carlson explains that the devices can be used to monitor athletes in sports applications. *Id*. Based on my knowledge and experience, it is my opinion that a person of ordinary skill in the art would have recognized the benefits described by Carlson, and these benefits would have motivated that person to include these same features in Lisogurski's system. The quality of the measurement of a physiological parameter derives ultimately from the quality of the signal being analyzed. Consistent with the general knowledge in the field, Carlson explains that noise such as that from ambient light diminishes that signal quality.

84. Lisogurski and Carlson are analogous references, both describing techniques for improving the power consumption of portable and wearable optical sensing devices, such as pulse oximeters. *See* Ex.1011 (Lisogurski) at 4:15-20, 17:51-58 (describing improvements in a system that includes a wearable sensor, *e.g.*, one worn on a wrist); Ex.1009 (Carlson), [0048], [0052] (describing devices that can be worn, for example, on an earlobe or finger). Both references describe techniques for improving the power consumption of portable, wireless, and wearable optical sensing devices, such as pulse oximeters, while improving their

performance (e.g., signal-to-noise ratio) and utility. Based on my knowledge and experience, it is my opinion that a person of ordinary skill in the art would have considered the references together when implementing Lisogurski's system.

85. As I explained in § IV.B, above, by 2012, there was a general trend in the industry to create wearable devices, to allow the device to be used in mobile monitoring systems or to allow the device to be used for sports and personal fitness applications. Thus, a person of ordinary skill in the art would have had reason to look to analogous references to create wearable devices that performed better in mobile and consumer applications.

86. Therefore, a person of ordinary skill in the art would have been motivated to consider Lisogurski and Carlson together, and to include features from Carlson in Lisogurski's system. I describe these features, and more specific reasons for integrating them into Lisogurski, in my analyses below.

4. Lisogurski and Carlson Describe the Elements of Claim 13 of the '533 Patent

87. It is my opinion that Lisogurski in combination with Carlson renders these claim 13 obvious. Claim 13 (Ex.1001) is reproduced below.

> 13. A measurement system comprising:
>
> a wearable measurement device for measuring one or more physiological parameters, including a light source comprising a plurality of semiconductor sources that are light emitting diodes, the light emitting diodes configured to generate an output optical beam with one or more optical wavelengths, wherein at least a portion of the one or more optical

wavelengths is a near-infrared wavelength between 700 nanometers and 2500 nanometers,

the light source configured to increase signal-to-noise ratio by increasing a light intensity from at least one of the plurality of semiconductor sources and by increasing a pulse rate of at least one of the plurality of semiconductor sources; the wearable measurement device comprising a plurality of lenses configured to receive a portion of the output optical beam and to deliver an analysis output beam to a sample;

the wearable measurement device further comprising a receiver configured to receive and process at least a portion of the analysis output beam reflected or transmitted from the sample and to generate an output signal, wherein the wearable measurement device receiver is configured to be synchronized to pulses of the light source;

a personal device comprising a wireless receiver, a wireless transmitter, a display, a microphone, a speaker, one or more buttons or knobs, a microprocessor and a touch screen, the personal device configured to receive and process at least a portion of the output signal, wherein the personal device is configured to store and display the processed output signal, and wherein at least a portion of the processed output signal is configured to be transmitted over a wireless transmission link; and

a remote device configured to receive over the wireless transmission link an output status comprising the at least a portion of the processed output signal, to process the received output status to generate processed data and to store the processed data, and wherein the remote device is capable of storing a history of at least a portion of the received output status over a specified period of time.

a) Preamble

88. The preamble of claim 13 specifies "*a measurement system*."

Lisogurski describes a measurement system. Ex.1011 (Lisogurski), 3:43-46, 3:61-

4:3 ("a pulse oximeter… may non-invasively measure the oxygen saturation of a patient's blood"); *see id.*, Abstract, 4:52-62, Figs. 1 and 3.

b) "a wearable measurement device…"

(i) "a wearable measurement device for measuring one or more physiological parameters…"

89. Lisogurski describes a sensor that may be worn on various portions of a person's body, including "a fingertip, toe, forehead or earlobe… additional suitable sensor locations include, without limitation…, the wrist to monitor radial artery pulsatile flow… and around or in front of the ear." Ex.1011 (Lisogurski), 4:6-20. The sensor is battery-powered and can communicate with the monitor over a wireless connection, which a person of ordinary skill in the art would understand means that the sensor is wearable and separate from the monitor. Ex.1011 (Lisogurski), 17:55-59 ("Sensor unit 312 may be powered by an internal power source, e.g., a battery… [T]he sensor may be wirelessly connected to monitor 314."). For these reasons, the sensor is a "*wearable measurement device*."

90. The sensor is part of a system for measuring physiological parameters. Ex.1011 (Lisogurski), 3:61-4:5, 4:22-25, 15:30-35. Lisogurski describes "an optical physiological monitoring system" that "may be used to determine physiological parameters such as blood oxygen saturation, hemoglobin, blood pressure, pulse rate, other suitable parameters, or any combination thereof."

Ex.1011 (Lisogurski), 1:10-25, *id.*, 3:43-46. Lisogurski describes a measurement device, for example, "a pulse oximeter… [that] may non-invasively measure the oxygen saturation of a patient's blood." Ex.1011 (Lisogurski), 3:61-4:3, *see id.*, Abstract, 3:43-46, 4:52-62, Figs. 1 & 3.

91. For the reasons stated above, the sensor is a "*wearable measurement device…for measuring one or more physiological parameters*."

> (ii) "a wearable measurement device… including a light source comprising a plurality of semiconductor sources that are light emitting diodes, the light emitting diodes configured to generate an output optical beam with one or more optical wavelengths, wherein at least a portion of the one or more wavelengths is a near-infrared wavelength between 700 nanometers and 2500 nanometers"

92. Lisogurski describes a wearable sensor that can include a light source comprising multiple LEDs. Ex.1011 (Lisogurski), 17:42-45 ("In an embodiment, sensor unit 312 may include multiple light sources and detectors."), 10:48-49, 10:58-64 ("light source 130 may include any number of light sources with any suitable characteristics"), Figs. 1 (130) & 3 (316).

93. The sensor can include multiple LEDs ("*a plurality of… light emitting diodes*"), each configured to output a different optical wavelength. Ex.1011 (Lisogurski), 7:38-8:3 ("For example, in a system with two light sources…the first

light source may be a high efficiency infrared (IR) LED while the one or more additional light sources may be lower efficiency red LEDs.”).

94. The LEDs “emit photonic signals having one or more wavelengths of light (e.g., Red and IR)” (“*an output optical beam with one or more wavelengths*”). Ex.1011 (Lisogurski), 10:49-52, *see id.*, 4:42-45. “[T]he IR wavelength may be between about 800 nm and about 1000 nm” (“*at least a portion of the one or more wavelengths is a near-infrared wavelength between 700 nanometers and 2500 nanometers*”). Ex.1011 (Lisogurski), 10:56-58. The light source may include any number of LEDs, such as multiple IR LEDs and multiple red LEDs. Ex.1011, 10:58-63, 17:37-45, 19:25-31 (“In some embodiments, the light source may include LEDs of multiple wavelengths, for example, a red LED and an IR led. In some embodiments, the light source may include multiple LEDs of the same wavelength, multiple LEDs of different wavelengths, any other suitable arrangement, or any combination thereof.”). The system is designed so that these photonic signals are sent “into a subject’s tissue,” (*id.*, 10:49-52), which means the LEDs emit light “transmitted to a particular location in space” as required by the claimed “*beam.*” Thus, Lisogurski teaches this element.

c) “the light source configured to increase signal-

to-noise ratio"

95. Lisogurski explains that the light source is in the wearable sensor 102. Ex.1011 (Lisogurski), 10:48-49. The circuitry may alter the light drive parameters of the LEDs in response to "the level of noise, ambient light, [or] other suitable reasons," and "increas[ing] the brightness of the light sources in response to [increased level of background] noise to improve the signal-to-noise ratio." Ex.1011 (Lisogurski), 9:46-52, *id.*, 5:55-6:6 (discussing modulation techniques and "conventional servo algorithms" for adjusting the signals emitted by the LEDs), 1:67-2:3.

96. The changes in the light drive parameters can be made to mitigate the effects of noise and changes from motion, or ambient light, for example, to thereby increase the signal-to-noise ratio. Conventional feedback control, or servo, algorithms would adjust the light drive signals due to, for example, ambient light changes, sensor positioning, and other sources external to the body variation. Conventional feedback control approaches would vary parameters at a slower rate than cardiac cycle modulation. A conventional feedback control, or servo, algorithm may adjust drive signal brightness, to compensate for ambient light variation, every several seconds. Cardiac cycle modulation schemes would adjust the brightness of a light in a way that is synchronized to the cardiac cycle and similar to or faster than the cardiac pulse rate. The cardiac cycle modulation

techniques may depend on the desired physiological parameter or unique characteristics of the individual's cardiac pulse patterns. Ex.1011 (Lisogurski), 5:59, 9:46-52, 9:57-60, 14:49-55.

97. The signal modulation techniques are controlled by control circuitry and light drive circuitry, which generate a light drive signal for activating and controlling the sensor's light sources. Ex.1011 (Lisogurski), 1:44-46, 11:38-41, 11:50-54. Light drive signal "[p]arameters that may be varied include light intensity, firing rate, duty cycle, other suitable parameters, or any combination thereof." Ex.1011 (Lisogurski), 1:19-21. These parameters correspond to instantaneous brightness (light intensity), frequency (firing rate), and pulse width which is the duration of each pulse of light (duty cycle).

98. The relevant circuitry is depicted in Figure 1 (annotations added) of Lisogurski:

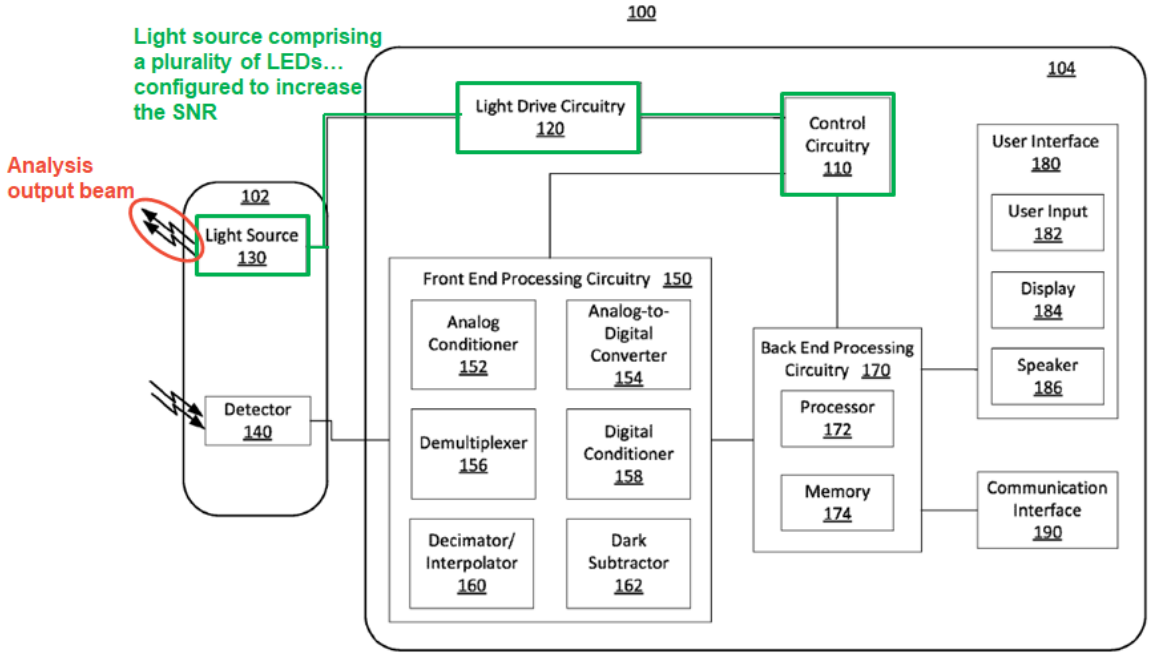

FIG. 1

99. I understand that Patent Owner may argue that Lisogurski does not disclose this element because the control and light drive circuitry that control the LEDs is depicted in monitor 104 which is separate from the wearable sensor 102 that contains the LEDs. Even if that were required, that configuration of Lisogurski would have been obvious.

100. It would have been obvious to integrate the control and light drive circuitry into the sensor. Lisogurski discloses an embodiment where the sensor is a separate device that is wirelessly connected to the monitor. Ex.1011 (Lisogurski), 17:55-59 ("Sensor unit 312 may be powered by an internal power source, e.g., a battery (not shown)…. [T]he sensor may be wirelessly connected to monitor 314 (not shown)."), 18:23-25, *see also id.*, 18:16-31. While this configuration of the

sensor is not depicted in Lisogurski's figures, a person of ordinary skill in the art would have at least found it obvious to configure the sensor and monitor to work in this wireless embodiment based on Lisogurski's own description of these elements.

101. The control circuitry directs the light drive circuitry to generate the light drive signal, which is the electric current provided to the LEDs that turns them on and determines their brightness. Ex.1011 (Lisogurski), 11:38-41, 11:50-54, 25:52-55. It would have been obvious to include the light drive circuitry in the sensor because that is where the LEDs are. The electrical current cannot be transferred wirelessly from the monitor to the sensor. Because these circuits work together to output the electric current that is applied to the LEDs, a person of ordinary skill in the art would have understood that this circuitry would need to be in the sensor with the LEDs, or at least that it was obvious to include the circuitry there.

102. Adding the light drive and control circuitry to the sensor would not have affected the operation of the device. These circuits would have been small and power efficient, and could easily be integrated into the wearable sensor. Lisogurski itself recognizes its components can be divided in the difference ways, explaining that "[i]n some embodiments the functionality of some of the components may be combined in a single component… [or] the functionality of

some of the components of monitor 104… may be divided over multiple components." Ex.1011 (Lisogurski), 16:2-9.

103. This also is consistent with general trends in the industry. As I explained in § IV.B, above, by 2012, there was a general trend in the industry to include additional features in wearable devices to improve those device's operation in mobile monitoring systems or for sports and personal fitness applications.

(i) "by increasing a light intensity from at least one of the plurality of semiconductor sources"

104. Lisogurski explains that the signal-to-noise ratio can be increased by varying the light drive parameters of the light source.

> In some embodiments, ***the system may alter the cardiac cycle modulation technique based on the level of noise, ambient light, other suitable reasons***, or any combination thereof. The system may receive, for example, an increased level of background noise in the signal due to patient motion. ***The system may increase the brightness of the light sources in response to the noise to improve the signal-to-noise ratio***. In some embodiments, the system may increase brightness throughout the cardiac cycle because the system may require increased signal amplitudes to differentiate between fiducial and other points of interest related to physiological parameters and those related to noise or motion. In some embodiments, the system may change from a modulated light output to a constant light output in response to noise, patient motion, or ambient light.

Ex.1011 (Lisogurski), 9:46-60. Although Lisogurski describes how varying the

light drive parameters increases the signal-to-noise ratio in the context of cardiac cycle modulation, the same principle applies to all the modulation processes, including drive cycle modulation and the servo algorithms. Lisogurski also explains that all three types of modulation may be used. Ex.1011 (Lisogurski), 6:26-31 ("The cardiac cycle modulation may represent a lower frequency envelope function on the higher frequency drive cycle. For example, cardiac cycle modulation may be an envelope on the order of 1 Hz superimposed on a 1 kHz sine wave drive cycle modulation."), 8:22-26 ("cardiac cycle modulation may be implemented in addition to a drive cycle modulation, conventional servo algorithms, or any combination thereof."), 17:21-29. Lisogurski explains that the frequency of the light source can be changed for the same reason. Ex.1011 (Lisogurski), 5:57-61, 9:46-51, 35:5-9 ("It will also be understood that the earlier described embodiments relating to varying light output may also apply to sampling rate."). So the person of ordinary skill in the art would understand Lisogurski to disclose varying the frequency (firing rate) of the light source to increase the signal-to-noise ratio, just as Lisogurski discloses increasing the light source amplitude for that same reason.

105. Lisogurski explains that a conventional servo algorithm can vary the light drive parameters of the light source for the same reasons it does with respect to cardiac cycle modulation.

> In some embodiments, conventional servo algorithms may be used in addition to any combination of cardiac cycle modulation and drive cycle modulation. Conventional servo algorithms may adjust the light drive signals due to, for example, ambient light changes, emitter and detector spacing changes, sensor positioning, other suitable parameters, or any combination thereof. Generally, conventional servo algorithms vary parameters at a slower rate than cardiac cycle modulation. For example, a conventional servo algorithm may adjust drive signal brightness due to ambient light every several seconds.

Ex.1011 (Lisogurski), 5:55-64.

106. A conventional servo, or feedback control, algorithm would vary parameters at a slower rate than cardiac cycle modulation. Conventional feedback control algorithms would adjust the light drive signals due to, for example, ambient light changes, sensor positioning, and other sources external to the body variation. A conventional servo algorithm may adjust drive signal brightness, to compensate for ambient light variation, every several seconds.

107. Lisogurski explains that the signal-to-noise ratio can be increased by increasing the "brightness" of a light source. For example, Lisogurski explains that the sensor may receive "an increased level of background noise in the signal due to patient motion. The system may ***increase the brightness of the light sources*** in response to the noise ***to improve the signal-to-noise ratio***." Ex.1011 (Lisogurski), 9:46-52 (emphases added), *see id.*, 37:6-22. Lisogurski explains that

the frequency of the light source can be changed for the same reason. Ex.1011 (Lisogurski), 5:57-61, 9:46-51, 35:5-9 ("It will also be understood that the earlier described embodiments relating to varying light output may also apply to sampling rate.").

108. Lisogurski also explains that a dim light signal can be "degraded by quantization noise" due to the analog-to-digital conversion process and increasing the brightness of the light source can improve the signal-to-noise ratio.

> The system may use conventional servo algorithms in part to keep received signal levels within the range of an analog to digital converter's dynamic range. For example, a signal with amplitudes that are large may saturate an analog to digital convertor. In response to a signal with high amplitudes, the system may reduce emitter brightness. In a further example, the quality of a low amplitude signal may be degraded by quantization noise by an analog to digital converter. In response, the system may increase the emitter brightness.

Ex.1011 (Lisogurski), 5:65-6:6.

109. For a fixed wavelength, the intensity of a light source is its brightness squared, and consequently, increasing the brightness of a light source also increases its intensity. Therefore, Lisogurski describes increasing the light intensity of that light source, and that doing so improves (increases) the signal-to-noise ratio.

(ii) "by increasing a pulse rate of at least one of the plurality of semiconductor sources"

110. A person of ordinary skill in the art would understand that "pulse rate" as used in the claims refers to the number of pulses of light per unit of time. This is consistent with the use of the word "pulse" in the specification.

> Some of the features for selecting a particular light source include power or intensity, wavelength range or bandwidth, spatial or temporal coherence, spatial beam quality for focusing or transmission over long distance, and pulse width or pulse repetition rate.

Ex.1001(533 patent) at 19:37-42.

> Also, the LED output may more easily be modulated, and the LED provides the option of continuous wave or pulsed mode of operation.

Ex.1001(533 patent) at 19:67-20:2.

> For example, the seed LD 2001 may be a distributed feedback (DFB) laser diode with a wavelength near 1542 nm or 1550 nm, with approximately 0.5-2.0 ns pulsed output, and with a pulse repetition rate between one kilohertz to about 100 MHz or more.

Ex.1001(533 patent) at 21:55-59.

111. Typically the pulse rate would be specified in hertz (Hz), which is the number of times the LED cycles (*e.g.*, on and off) in 1 second. Other terms for pulse rate include "frequency" and "firing rate."

112. Lisogurski explains that its system can adjust various parameters of light emitted by the LEDs to ensure an adequate signal-to-noise ratio. Ex.1011 (Lisogurski), 9:46-52, *id.*, 37:6-22. These parameters include "drive current or light brightness, duty cycle, [and] ***firing rate***" amongst others. Ex.1011

(Lisogurski), 27:44-52, *id.*, 2:1-2 ("light source firing rate"), 8:29-35, 25:49-55. The firing rate refers to the number of times per second that the light is turned on and off, or equivalently it is one divided by the time of one full cycle (the total period of time of when on and off for one cycle). The duty cycle refers to the percentage of time during one full cycle when the light is on.

113. A person of ordinary skill in the art would understand that the "firing rate" of an LED is the same as the claimed "pulse rate," because both terms refer to the rate or frequency at which the LED is turned on and off.

114. Lisogurski uses the term "pulse rate" to refer to the heart rate of a user, Ex.1011 (Lisogurski), 1:22-25 ("determined physiological parameters such as… pulse rate"), and the term "firing rate" to refer the frequency at which the LED blinks, Ex.1011 (Lisogurski), 2:1-2 ("light source firing rate").

115. Lisogurksi describes embodiments where the firing rate of an LED is correlated to the sampling rate of an analog-to-digital converter in the detector. Ex.1011 (Lisogurski), 33:47-49 ("In some embodiments, sampling rate modulation may be correlated with light drive signal modulation."); *see also* 11:43-46, 11:52-55. In those embodiments, where the sampling rate increases, the firing rate of the LED also increases.

> In some embodiments, the sampling rate may represent the amount of time between "on" periods. For example, the time between "on" periods may be the length of time of "off" period 220 of FIG. 2A.

> Increasing the duration of the "off" periods (i.e., ***decreasing the emitter firing rate***) relates to a decreased sampling rate. Similarly, decreasing the duration of the "off" periods (i.e., ***increasing the emitter firing rate***) relates to an increased sampling rate.

Ex.1011 (Lisogurski), 35:27-31 (emphasis added).

116. Lisogurski explains that the sampling rate (and therefore the LED firing rate) can be varied for the same reasons that light brightness is varied.

> It will also be understood that sampling rate is one of the components that may be modulated in cardiac cycle modulation as described above. It will also be understood that the earlier described embodiments relating to varying light output may also apply to sampling rate.

Ex.1011 (Lisogurski), 35:5-9. With respect to the light output, Lisogurski states that "[t]he system may ***increase the brightness of the light sources*** in response to the noise ***to improve the signal-to-noise ratio***." Ex.1011 (Lisogurski), 9:46-52 (emphases added). Lisogurski states that increasing the sampling rate "may result in more accurate and reliable physiological information." Ex.1011 (Lisogurski), 33:56-58. Therefore, Lisogurski explains that the LED firing rate can be increased to increase signal-to-noise ratio.

117. Even if Lisogurski alone does not teach increasing the firing rate of its LEDs to increase the signal-to-noise ratio, it would have been obvious to configure Lisogurski to do so based on Carlson.

118. Lisogurski explains that increasing the signal-to-noise ratio in its system is important, and it indicates that one way this can be done is by increasing the brightness of the light sources it is using. Ex.1011 (Lisogurski), 9:50-52 ("The system may increase the brightness of the light sources in response to the noise to improve the signal-to-noise ratio."). It also explains that one reason to do this is to offset the effect of "noise, patient motion, or ambient light." *Id.*, 9:57-60. This is consistent with the knowledge of the person of ordinary skill in the art, who would have understood that the quality of measuring a physiological parameter derives ultimately from the quality of the signal being analyzed, and that noise such as ambient light diminishes that signal quality. The person of ordinary skill in the art implementing Lisogurski would have been motivated to look for additional ways of improving the signal-to-noise ratio.

119. Like Lisogurski, Carlson describes techniques for removing noise from a signal, such as noise from ambient sun light. Ex.1009 (Carlson), [0067]-[0069]. Carlson explains that the signal-to-noise ratios in the types of optical sensors used in the Lisogurski systems can be improved by pulsing the LEDs to reduce the effects of ambient light. Ex.1009 (Carlson), [0067]-[0069]. Carlson teaches that the pulse frequency ("*pulse rate*") is "chosen in such a way that it is outside the frequency spectrum of sunlight and ambient light" and it could be "1000 Hz" or "can be chosen at any other frequency, as e.g. 2000 Hz or even

higher." Ex.1009 (Carlson), [0069]. Figure 8 of Carlson shows increasing the operating frequency F_0 of the LEDs as compared to Fig. 7c. Ex.1009 (Carlson), [0069]. This frequency shift, which corresponds to increasing the "*pulse rate*" of the emitter, increases "significantly the Signal-to-Noise and Signal-to-Background ratio." Ex.1009 (Carlson), [0069].

120. Lisogurski explains that the firing rate of the LEDs can be adjusted in response changes in environmental conditions, such as changes in background noise or ambient light. Ex.1011 (Lisogurski), 1:67-2:3 ("The system may, in response to the external trigger, vary the… light source firing rate"), 5:55-61 ("Conventional servo algorithms may adjust the light drive signals due to, for example, ambient light changes"), 9:46-60 ("the system may alter the cardiac modulation technique based on the level of noise, ambient light, [or] other suitable reasons…"), 37:6-18 (the system may change the modulation mode if it "detect[s] a change in background noise [or] a change in ambient light"). To the extent Lisogurski does not increase the firing rate (frequency) to increase the signal-to-noise ratio, it would have been obvious to do so based on Carlson. Given that Lisogurski describes various techniques for improving signal-to-noise ratio in different scenarios, the person of ordinary skill in the art would have been motivated to include additional techniques for improving the signal-to-noise ratio

into Lisogurski. Carlson describes that increasing the modulation frequency of the pulsed LEDs improves the signal-to-noise ratio. Ex.1009 (Carlson), [0069].

121. Lisogurski could have readily been modified to incorporate the Carlson technique, given that Lisogurski already adjusts the firing rate of the LEDs in response changes in environmental conditions, such as changes in background noise or ambient light. Ex.1011 (Lisogurski), 1:67-2:3, 5:55-61, 9:46-60, 37:6-18. Based on my knowledge and experience, a person of ordinary skill in the art would have been motivated to incorporate additional techniques for improving the signal-to-noise ratio from analogous references. Consequently, a person of ordinary skill in the art would have found it obvious to configure Lisogurski to increase the firing rate (frequency) of LEDs as taught by Carlson, given that Carlson teaches that increasing the modulation frequency of the pulsed LEDs improves the signal-to-noise ratio. Ex.1009 (Carlson), [0069].

122. Based on my knowledge and experience, a person of ordinary skill in the art would have recognized that configuring Lisogurski to increase the signal-to-noise ratio by increasing the LED firing rate was a predictable arrangement of known elements, with each performing the same function it was known to perform and yielding what one would expect from the arrangement.

d) "the wearable measurement device comprising a plurality of lenses configured to receive a portion of the output optical beam and to

deliver an analysis output beam to a sample"

123. Lisogurski uses red and infrared LEDs to emit an output optical beam. Ex.1011 (Lisogurski), 10:53-56, 7:38-8:3. Although Lisogurski does not explicitly describe using a lens, the person of ordinary skill in the art would have understood that Lisogurski likely would use a lens with each LED, or at least it would have been obvious to do so.

124. Based on my knowledge and experience, it was well-known to those skilled in the art that a conventional LED package includes a light emitting semiconductor, such as a semiconducting material doped with impurities to create a p-n junction, that creates the light. That semiconductor typically is encapsulated in glass or another medium which is called an encapsulant. The encapsulant can serve several purposes. One is that it protects the semiconductor from the environment (*e.g.*, moisture, dust). But another common purpose of the encapsulant is to act as a lens. The encapsulant typically is shaped to focus the light emitted by the LED. In the 2012 time frame, the vast majority of commercially available LEDs were designed this way.

125. A person of ordinary skill in the art would have understood that there were three types of LEDs: (i) LEDs with no encapsulant, (ii) LEDs with an optically inert encapsulant, and (iii) LEDs with an encapsulant that acts as a lens.

See generally Ex. 1035 (Light Emitting Diodes), 97-98, 191-99, 266-67. A lens that is part of the LED package is called a primary optic.

126. A person of ordinary skill in the art designing a system based on Lisogurski would have recognized that Lisogurski was describing a device that would benefit from selecting an LED that uses an encapsulant that functions as a lens, as this was a common configuration at the time. Even if Lisogurski did not explicitly or implicitly describe that each LED includes a lens, it would have been obvious to select one. The lenses on the LEDs can be used to direct all of the emitted light at an angle closer to perpendicular to the chip or substrate. For example, instead of emitting light 180°, light might be emitted over a 90° or 120° range. Using a lens would increase the amount of light that is directed toward the sample or person by directing more of the LED's light outward toward the tissue. Using a lens is a standard way to increase the directional intensity of, in a reduced solid angle from, the LED without using more power. Conserving power is particularly important for mobile, battery-powered, wireless devices, which have limited power compared to stationary devices that are powered by, for example, wall outlets.

127. Where Lisogurki is implemented using LEDs with lenses, Lisogurski meets this claim element. Each of Lisogurski's LEDs would emit a portion of an

"*optical output beam*," which would be captured and focused by the encapsulant lens ("*a plurality of lenses*") on each LED and focused on the tissue.

128. LEDs also can be used with lens that are separate from the LED packaging. These are called secondary optics. As I explained in the background section above, it was well-known in the art that a lens is a "basic building block" of an optical sensor (Ex.1019 (Biomedical Engineering Handbook), 765) and that lenses commonly were part of optical sensors.

129. To the extent one argues Lisogurski's LEDs do not suggest the use of lenses ("transparent surfaces used to collimate (make parallel) or focus rays of light" per Apple's construction or within that term's ordinary meaning as proposed by Omni), using a lens for each LED would have been obvious based on a the knowledge of a person of ordinary skill in the art. Using a lens to focus light was a well-known technique that has been around for a long time, is a central tool for most optical and optical measurement systems, and is done in most optical and optical measurement systems. Based on my knowledge and experience, a skilled artisan would recognize that a lens would collimate or focus light is the same concept that eye-glasses use to correct a person's vision. That person would recognize that the lens in glasses collimates or focuses light. Accordingly, that skilled artisan would further understand that it would be obvious to use a lens with an LED to focus the light in a way that improves detection.

130. Even if Lisogurski itself does not render the use of one or more lenses obvious, the combination of Lisogurski and Carlson does.

131. Carlson discloses using "at least one beam shaping optical element to direct the emitted light" towards a sample. Ex.1009 (Carlson), [0013]. The beam shaping element can be "diffractive or refractive lenses, to direct the emitted optical radiation of, e.g., the LED light source into the human or animal tissue …." Ex.1009 (Carlson), [0013], [0014], [0024], [0062]. A "refractive lens" is one that focuses rays of light, and as described in Carlson, this lens would be a transparent surface that focuses or collimates rays of light. Put another way, a refractive lens focuses rays of light thereby meeting Apple's construction of "*lens*." Figure 4 shows two lenses 21 receiving light beams 8 emitted by LEDs 15 ("*a portion of the output optical beam*") and delivering light bundles or beams 12 to sample 2 ("*deliver an analysis output beam to a sample*"). Ex.1009 (Carlson), [0054], [0062].

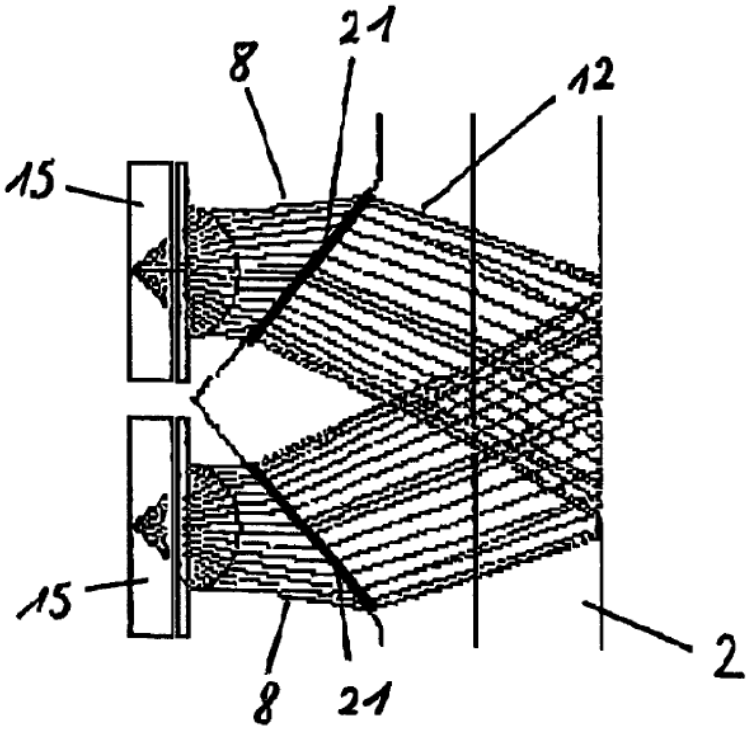

Figure 4

Ex.1009 (Carlson), Fig.4, *id.*, [0054] ("in Fig. 4, using the beam shaping optics 21, the two initial light beams 8 are guided in the form of bundled beams 12"). As shown in the figure, the rays of light out of each lens are substantially parallel. By doing so, the lens direct the light in way that "collimates (makes parallel) rays of light," which meets Apple's construction of the term "*one or more lenses*." And as shown in the figure, the light within each beam is "transmitted to a particular location in space" (the person's skin and tissue) and meets the construction of "*beam*."

132. In addition, the LEDs emit light via the lens that is "transmitted to a particular location in space" as required by the claim term "*beam*." Specifically,

the lens help "guide" light to a particular location by making the rays substantially parallel. Id., [0054]. Accordingly, and based on my knowledge and experience, a skilled artisan would recognize that Carlson's lenses guide the light within each beam is "transmitted to a particular location in space" and meets Apple's construction of the term "*beam*."

133. It would have been obvious to include these lenses in Lisogurski's sensor to focus the light emitted by the LEDs onto a person's skin as described by Carlson. Carlson itself explains that it is beneficial to include lens in optical sensors to increase the optical signal power without increasing the actual power used by the system and that the lens focuses light on (delivers light to) the tissue. Ex.1009 (Carlson), [0014] ("The basic idea… is to use ***a beam-shaping element, such as e.g., … lenses***…, in order to increase the optical signal power…, thus increasing the Signal/Noise … ratio."), *id.*, [0010]. A person of ordinary skill in the art would have been motivated to include lenses in Lisogurski because Lisogurski is directed to a system for improving the power consumption of optical sensing devices and that includes techniques for improving the signal-to-noise ratio of the measured optical signal. Ex.1011 (Lisogurski), 6:3-6, 9:49-60, 13:60-14:10, 14:40-55, 37:6-20. Adding lenses to Lisogurski would further its own goals and improve its operation.

134. A person of ordinary skill in the art would have recognized that adding lenses to Lisogurski would complement its operation. It was well-known that lenses are one of the "basic building blocks" of optical sensors, (Ex.1019 (Biomedical Engineering Handbook), 765), and that incorporating lenses into Lisogurski's sensor was a predictable arrangement of known elements, with each performing the same function it was known to perform and yielding what one would expect from the arrangement.

135. For all of these reasons, Lisogurski and Carlson render obvious "*a plurality of lenses configured to receive a portion of the output optical beam and to deliver an analysis output beam to a sample*."

e) "the wearable measurement device further comprising a receiver configured to receive and process at least a portion of the analysis output beam reflected or transmitted from the sample and to generate an output signal, wherein the wearable measurement device receiver is configured to be synchronized to pulses of the light source"

136. Lisogurski's sensor includes "[o]ne or more detector 318… for detecting the light that is reflected by or has traveled through the subject's tissue" ("*receive[s]… the analysis output beam*"). Ex.1011 (Lisogurski), 17:40-42, *see also id.*, 11:9-10, Figs. 1 (140) & 3 (318). Each detector "converts the intensity of the received light into an electrical signal" ("*process[es]… the analysis output*

beam… and [] generate[s] an output signal"). Ex.1011 (Lisogurski), 11:14-17, 11:20-25, Figs. 1 (102) & Fig. 3 (312). "After converting the received light to an electrical signal, detector 140 may send the detection signal to monitor 104." Ex.1011 (Lisogurski), 11:20-22. The sensor also may further process the electrical signal before transmitting the detection signal to the monitor. Ex.1011 (Lisogurski), 11:25-27.

137. Lisogurski's detectors are connected to front-end processing circuitry (together, "*a receiver configured to receive and process*"), which "may receive a detection signal from detector 140 and provide one or more processed signals to back end processing circuitry 170." Ex.1011 (Lisogurski), 12:42-44; Fig. 1 (150). The "processed signals" correspond to the claimed "*output signal*." The detectors generate electrical signals that are received by the front-end processing circuitry, and those signals are passed between the components of the circuitry. Ex.1011 (Lisogurski), 13:6-60.

138. The relevant components are depicted in the below annotated Figure 1 of Lisogurski:

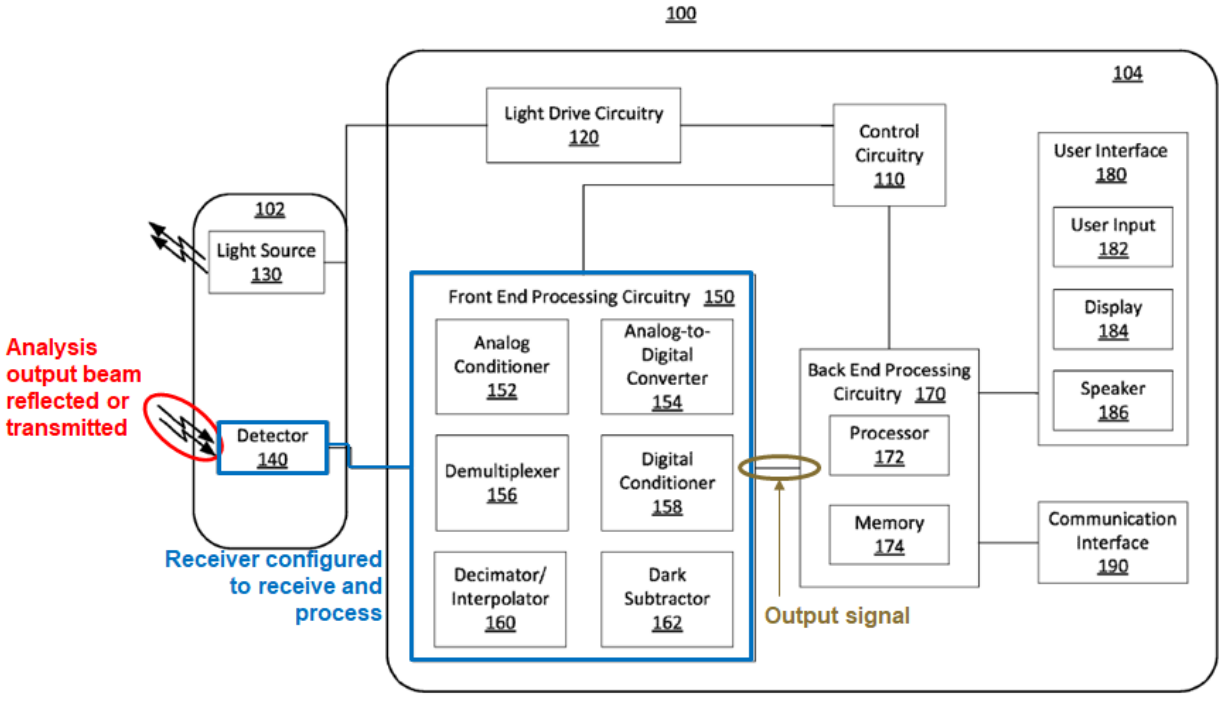

FIG. 1

139. The front-end processing circuitry is synchronized with the light drive circuitry that controls the pulses of the LEDs. Ex.1011 (Lisogurski), 11:41-46 ("front end processing circuitry 150 may… operate ***synchronously*** with light drive circuitry 120. For example, front end processing circuitry 150 may ***synchronize*** the operation of an analog-to-digital converter and a demultiplexer with the light drive signal based on the timing control signals."). Therefore, the front-end processing circuitry and the detector ("*receiver*") are "*synchronized*" to the light drive signal ("*pulses of the light source*").

140. Lisogurksi also describes examples where the firing rate of an LED is correlated to the sampling rate of an analog-to-digital converter in the detector. Ex.1011 (Lisogurski), 33:47-49 ("In some embodiments, sampling rate modulation

may be correlated with light drive signal modulation."), *see also* 2:1-2, 27:44-52 (LED firing rate can be modulated). Lisogurski explains "[f]or example, the time between 'on' periods [for an LED] may be the length of time of 'off' period 220 of FIG. 2A… [D]ecreasing the duration of the 'off' periods (i.e., ***increasing the emitter firing rate***) relates to an increased sampling rate." Ex.1011, 35:27-31 (emphasis added). Lisogurski describes an embodiment where the measurements taken by the receiver have a one-to-one correlation, with one sample taken per on period. Ex.1011 (Lisogurski), 35:17-19. Because the measurements taken by the receiver in this embodiment are coordinated in time with the pulses emitted by the LEDs, the LEDs and the receiver are synchronized.

141. Lisogurski's description of the synchronizing process, which uses timing signals to synchronize the operation of the light source and the detection circuitry, is consistent with the embodiments in '533 specification. Ex.1001, 16:58-62 ("In one embodiment, the light source may be modulated, and then the detection system would be synchronized with the light source."), 19:17-19 ("some sort of synchronous detection system may be used").

142. I understand that Patent Owner may argue that Lisogurski does not describe this claim element because the front-end processing circuitry is depicted in monitor 104 which is separate from wearable sensor 102 that contains the

detector. Even if that were required, it would have been obvious to include the front-end processing circuitry and detector in Lisogurski's wearable sensor.

143. It would have been obvious to a person of ordinary skill in the art to implement the front-end processing circuitry and detector in the same device. Lisogurski's sensor can "preprocess" the electrical signal before transmitting the signal to the monitor. Ex.1011 (Lisogurski), 11:20-27. The sensor may be a separate device from the monitor that is wirelessly connected to the monitor. Ex.1011 (Lisogurski), 17:55-59 ("Sensor unit 312 may be powered by an internal power source, e.g., a battery (not shown)…. [T]he sensor may be wirelessly connected to monitor 314 (not shown)."), 18:23-25, *see also id.*, 18:16-31. Based on these disclosures, a person of ordinary skill in the art would have at least found it obvious to configure the system this way even though this particular wireless configuration is not depicted in Lisogurski's figures.

144. It would have been obvious to a person of ordinary skill in the art to include the front-end processing circuitry in the sensor so that the sensor could process the detected signal before wirelessly transmitting it to the monitor. A person of ordinary skill in the art would have known that in order for information contained in the analog signal output from the detector to be wirelessly transmitted effectively, it would have to be converted to digital form. The analog-to-digital conversion (and other processing) is performed by the front-end processing

circuitry. The person of ordinary skill in the art would have understood that measurement accuracy would be improved by performing the analog-to-digital conversion prior to wireless transmission, and by being able to tune the measurement process by, for example, adjusting any gain values. Accordingly, it would have been obvious to include the front-end processing circuitry in the sensor. Adding the front-end processing circuitry to the sensor would not have affected the operation of the device because the necessary circuitry is small and power efficient, and could easily be integrated into the wearable sensor.

145. Integrating the detector and front-end processing circuitry into the same device is consistent with Lisogurski's explanation that "[i]n some embodiments the functionality of some of the components may be combined in a single component… [or] the functionality of some of the components of monitor 104… may be divided over multiple components." Ex.1011 (Lisogurski), 16:2-9.

146. This also is consistent with general trends in the industry. As I explained in § IV.B, above, by 2012, there was a general trend in the industry to include additional features in wearable devices to improve those device's operation in mobile monitoring systems or for sports and personal fitness applications.

f) "a personal device…"

(i) "a personal device comprising a wireless receiver, a wireless transmitter, a display, a microphone, a speaker, one or more buttons or knobs, a

> microprocessor and a touch screen, the personal device configured to receive and process at least a portion of the output signal"

147. Lisogurki describes a personal device. This corresponds to the back end processing circuitry, user interface, and communication interface in Lisogurski's monitor 104. The '533 patent describes a personal device as being, for example, a smart phone, tablet cell phone, PDA, or computer 2405. Ex.1001, 26:54-55, 27:3-5. Lisogurski's monitor includes a display and user interface that allows a user to see the monitored person's physiological parameters and to configure the operation of the system. Ex.1011 (Lisogurski), 15:19-42. These components are in annotated Figure 1 below:

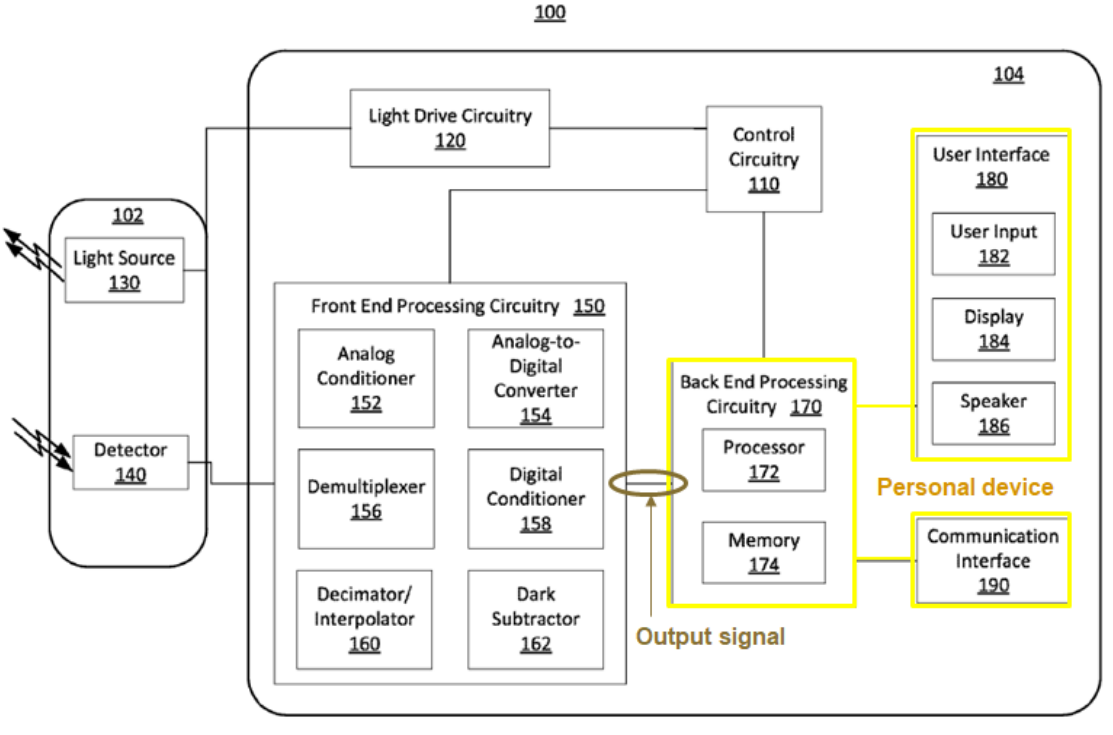

FIG. 1

148. The front-end processing circuitry performs some initial processing on the detected signal and then passes the processed signal ("*output signal*") to back-end processing circuitry 170, which is coupled to user interface 180 and communication interface 190. Ex.1011 (Lisogurski), 15:16-18, Fig. 1. The back-end processing circuitry includes a processor that receives and processes the output signal from the front-end processing circuitry ("*configured to receive and process at least a portion of the output signal*"). Ex.1011 (Lisogurski), 14:60-62. "For example, processor 172 may determine one or more physiological parameters based on the received physiological signals." Ex.1011 (Lisogurski), 14:62-64.

149. The back-end processing circuitry includes the other elements in the claim: "*a wireless receiver, a wireless transmitter, a display, a microphone, a speaker, one or more buttons or knobs, a microprocessor and a touch screen*." The back-end processing circuitry includes a ***processor*** 172 and is coupled to the user interface, which may include "any type of user input device such as a keyboard, a mouse, ***a touch screen***, ***buttons***, switches, ***a microphone***, a joy stick, a touch pad, or any other suitable input device." Ex.1011 (Lisogurski), 15:20-23 (emphases added), Fig. 1 (180, 182). The user interface also includes a ***display*** and a ***speaker***. Ex.1011 (Lisogurski), 15:19-20, Fig 1 (180, 184, 186). The communication interface "may include one or more ***receivers*** [or] ***transmitters***"

each of which "may be configured to allow …***wireless*** communication." Ex.1011 (Lisogurski), 15:49-56 (emphases added).

(ii) "a personal device… wherein the personal device is configured to store and display the processed output signal, and wherein at least a portion of the processed output signal is configured to be transmitted over a wireless transmission link"

150. The back-end processing circuitry of monitor 104 includes a processor that "may determine one or more physiological parameters based on the received physiological signals" and a display that shows those physiological parameters ("*the processed output signal*"), including "for example, an estimate of a subject's blood oxygen saturation generated by monitor 104 (referred to as an 'SpO_2' measurement) [and] pulse rate information." Ex.1011 (Lisogurski), 14:62-64. 15:30-35. Therefore, the processed data is "*display[ed]*."

151. The back-end processing circuitry also includes a memory such as RAM, ROM, flash memory, hard drive (magnetic disk). Ex.1011 (Lisogurski), 14:64-15:16, Fig. 1 (174). Lisogurski explains that the system can store a history of the determined physiological parameters, and logically, this history would be stored in memory. Ex.1011 (Lisogurski), 27:31-36, 30:42-48, 33:23-27. Thus, the processed data is "*store[d]*."

152. Not only may the determined physiological parameters be displayed, the "data [may be published] to a server or a website" and the parameters may be

made available to a user by any other suitable technique. Ex.1011 (Lisogurski), 26:55-60. To publish the data to a server or website or to have it transmitted to another device, the back-end processing circuitry of the monitor can transmit information to external devices through a wireless transmission link such as "WiFi, IR, WiMax, BLUETOOTH, UWB or other standards." Ex.1011 (Lisogurski), 15:43-48, 15:55-57. Therefore, the processed data are "*transmitted over a wireless transmission link*."

153. The determined physiological parameters also may be wirelessly transmitted to another monitor 326 that can process and display information from multiple monitoring devices. Ex.1011 (Lisogurski), 18:11-15, 18:49-62 ("Multi-parameter physiological monitor 326 may be configured to calculate physiological parameters and to provide a display 328 for information from monitor 314 and from other medical monitoring devices… Monitor 314 may be communicatively coupled to multi-parameter physiological monitor 326… and/or may communicate wirelessly."). Both monitors can further share the information with servers or other workstations. Ex.1011 (Lisogurski), 18:11-15, 18:62-65 ("In addition, monitor 314 and/or multi-parameter physiological monitor 326 may be coupled to a network to enable the sharing of information with servers or other workstations."). This is a second way the processed data are "*transmitted over a wireless transmission link*."

g) "a remote device…"

(i) "a remote device configured to receive over the wireless transmission link an output status comprising the at least a portion of the processed output signal, to process the received output status to generate processed data and to store the processed data"

154. Lisogurski states that the physiological parameters and other data ("*an output status comprising at least the processed output signal*") determined by the back-end processing circuitry of the monitor may be wirelessly transmitted to several different devices, including to "a server or a website" or to another monitor, each of which is a "*remote device*." Ex.1011 (Lisogurski), 26:55-60 (publish to server or website), 18:11-15, 18:58-62 (monitor can send data to another monitor), *id.*, 15:43-48 (data can be wirelessly sent to "electronic circuitry, a device, a network, a server or other workstations"), 15:55-57 (describing wireless transmission).

155. The data transmitted to a server, website, another monitor, or other remote device may be further processed and stored. To "publish" data to a server or website, the server or website would need to process the data and then store it. *See* Ex.1011 (Lisogurski), 26:55-60. The data would be stored both in volatile memory (for example RAM as it is received and processed) and also in longer term memory so it could be accessed by a user. Lisogurski also explains that "processing equipment remote to the system may be used to determine

physiological parameters." Ex.1011 (Lisogurski), 26:51-53. This would include any server or website that received the transmitted data.

156. Where the remote device is another monitor, that monitor can be a "[m]ulti-parameter physiological monitor 326 [] configured to calculate physiological parameters and to provide a display 328 for information from monitor 314 and from other medical monitoring devices or systems." Ex.1011 (Lisogurski), 18:49-53. A person of ordinary skill in the art would have understood this monitor could further calculate parameters for display and combine the data from various monitors. This data also would need to be stored for display and access.

157. Therefore, a person of ordinary skill in the art would have understood that all of these devices generate and store processed data in order to perform the functions described in Lisogurski.

(ii) "wherein the remote device is capable of storing a history of at least a portion of the received output status over a specified period of time"

158. Lisogurski explains that the data transmitted to a server, website, another monitor, or other remote device may be stored or "published." Ex.1011 (Lisogurski), 26:55-60. And where the remote device is another monitor, that monitor can be a "[m]ulti-parameter physiological monitor 326 [] configured to calculate physiological parameters and to provide a display 328 for information

from monitor 314 and from other medical monitoring devices or systems." Ex.1011 (Lisogurski), 18:49-53.

159. Lisogurski explains that the various devices in its system can collect historical data and use that data in its processes. For example, Lisogurski states that its system can perform "historical analysis of prior cardiac cycles." Ex.1011 (Lisogurski), 20:8-9. And "[s]tatistical information… may also be calculated… for the historical information." Ex.1011 (Lisogurski), 20:9:13. Lisogurski further states:

> In some embodiments, ***historical information may be used to determine the timing of cardiac cycle modulation***. For example, information from previous pulse cycles may be used to determine "on" and "off" states. In some embodiments, ***the system may use statistical information from historical information***, for example, mean period and/or standard deviation of one or more previous pulse cycles. The system may use a mean period to determine or estimate the time period between a previous period of interest and the next period of interest. For example, the system may wait a particular percentage (e.g., 80%) of the mean period following a period of interest before returning to an "on" state. In some embodiments, the particular percentage or other criteria may be based on statistical information. For example, a smaller standard deviation in the period of historical pulses may indicate that there is relatively less variation in the pulse period…. In some embodiments, the system may remain in a particular cardiac cycle modulation mode for an amount of time

> following a historical event. For example, the system may operate in a high power mode without cardiac cycle modulation for a certain time period following, for example, high noise levels, a loss of signal, or an irregular cardiac rhythm….

Ex.1011 (Lisogurski), 8:45-9:11 (emphasis added).

160. Lisogurski explains different historical data can be used depending on the physiologic parameter calculated by the system. The physiologic parameters may be calculated by the monitor or a remote device.

> In some embodiments, the cardiac cycle modulation technique may be selected or varied, for example, based on empirical data…. For example, ***the system may vary the timing of a cardiac cycle modulation technique to determine pulse identification based on a metric related to the determined pulse, such as a standard deviation***. In another example, data points may be analyzed to determine if a cardiac pulse peak is aligned with a cardiac cycle modulation maximum, and the system may make phase relationship adjustments accordingly. In some embodiments, more complex variation algorithms may be used ***depending on the determined physiological parameter***. ***Selections and variations of cardiac cycle modulation techniques may also be based on empirical data, user input, lookup tables, historical information***, other suitable information or any combination thereof.

Ex.1011 (Lisogurski), 6:53-7:3 (emphasis added).

161. To calculate historical information, the system must store historical physiological data ("*received output status*"), over a specified period of time (*e.g.*, a certain number of cardiac cycles or a certain period of time).

162. Lisogurski states that the remote device can be another monitor, such as be a "[m]ulti-parameter physiological monitor 326 [] configured to calculate physiological parameters and to provide a display 328 for information from monitor 314 and from other medical monitoring devices or systems." Ex.1011 (Lisogurski), 18:49-53. A person of ordinary skill in the art would have known that such monitors track historical information (for example over the past 3, 6, 12, or 24 hours) to allow medical personnel to track the status of a patient.

163. A person of ordinary skill in the art would therefore understand that the remote device (whether it is a server, website, another monitor, or another device with memory and processing capability) stores a history of the data and can perform an historical analysis.

5. Lisogurski and Carlson Describe the Elements of Claim 5 of the '533 Patent

164. Claim 5 of the '533 patent are directed toward systems with substantially the same claim elements. It is my opinion that Lisogurski in combination with the knowledge of a person of ordinary skill in the art renders this claims obvious. The claim is reproduced below.

5. A measurement system comprising:

a light source comprising a plurality of semiconductor sources that are light emitting diodes, the light emitting diodes configured to generate an output optical beam with one or more optical wavelengths, wherein at least a portion of the one or more optical wavelengths is a near-infrared wavelength between 700 nanometers and 2500 nanometers,

the light source configured to increase signal-to-noise ratio by increasing a light intensity from at least one of the plurality of semiconductor sources and by increasing a pulse rate of at least one of the plurality of semiconductor sources;

an apparatus comprising a plurality of lenses configured to receive a portion of the output optical beam and to deliver an analysis output beam to a sample

a receiver configured to receive and process at least a portion of the analysis output beam reflected or transmitted from the sample and to generate an output signal, wherein the receiver is configured to be synchronized to the light source;

a personal device comprising a wireless receiver, a wireless transmitter, a display, a microphone, a speaker, one or more buttons or knobs, a microprocessor and a touch screen, the personal device configured to receive and process at least a portion of the output signal, wherein the personal device is configured to store and display the processed output signal, and wherein at least a portion of the processed output signal is configured to be transmitted over a wireless transmission link; and

a remote device configured to receive over the wireless transmission link an output status comprising the at least a portion of the processed output signal, to process the received output status to generate processed data and to store the processed data.

a) Preamble

165. Lisogurski describes the preamble for the same reasons described above for Claim 13, limitation (a) (§VII.A.4.a).

b) "a light source comprising a plurality of semiconductor sources that are light emitting diodes configured to generate an output optical beam with one or more wavelengths, wherein at least a portion of the one or more optical wavelengths is a near-infrared wavelength between 700 nanometers and 2500 nanometers"

166. Lisogurski describes this limitation for the same reasons described above for Claim 13, limitation (b)(2) (§VII.A.4.b.ii).

c) "the light source configured to increase signal-to-noise ratio…."

167. Lisogurski describes this limitation for the same reasons described above for Claim 13, limitation (c) (§VII.A.4.c).

(i) "by increasing a light intensity from at least one of the plurality of semiconductor sources"

168. Lisogurski describes this limitation for the same reasons described above for Claim 13, limitation (c)(1) (§VII.A.4.c.i).

(ii) "by increasing a pulse rate of at least one of the plurality of semiconductor sources"

169. Lisogurski describes this limitation for the same reasons described above for Claim 13, limitation (c)(2) (§VII.A.4.c.ii).

d) "an apparatus comprising a plurality of lenses configured to receive a portion of the output optical beam and to deliver an analysis output beam to a sample"

170. Lisogurski describes this limitation for the same reasons described above for Claim 13, limitation (d) (§VII.A.4.d).

e) "a receiver configured to receive and process at least a portion of the analysis output beam reflected or transmitted from the sample and to generate an output signal, wherein the receiver is configured to be synchronized to pulses of the light source"

171. Lisogurski describes this limitation for the same reasons described above for Claim 13, limitation (e) (§VII.A.4.e).

f) "a personal device…"

(i) "a personal device comprising a wireless receiver, a wireless transmitter, a display, a microphone, a speaker, one or more buttons or knobs, a microprocessor and a touch screen, the personal device configured to receive and process at least a portion of the output signal"

172. Lisogurski describes this limitation for the same reasons described above for Claim 13, limitation (f)(1) (§VII.A.4.f).

(ii) "a personal device… wherein the personal device is configured to store and display the processed output signal, and wherein at least a portion of the processed output signal is configured to be transmitted over a wireless transmission link"

173. Lisogurski describes this limitation for the same reasons described above for Claim 13, limitation (f)(2) (§VII.A.4.f.ii).

g) "a remote device configured to receive over the wireless transmission link an output status comprising the at least a portion of the processed output signal, to process the received output status to generate processed data and to store the processed data."

174. Lisogurski describes this limitation for the same reasons described above for Claim 13, limitation (g)(1) (§VII.A.4.g.i).

6. Claim 7

175. Claim 7 depends from claim 5 and specifies "*wherein the remote device is further configured to transmit at least a portion of the processed data to one or more other locations, wherein the one or more other locations is selected from the group consisting of the personal device, a doctor, a healthcare provider, a cloud-based server and one or more designated recipients, and wherein the remote device is capable of transmitting information related to a time and a position associated with the at least a portion of the processed data*."

176. Carlson discloses that measured values from its sensor can be wirelessly transmitted, including to "a special unit" worn by the user, which generates an alarm signal when a measured value is not within a predetermined range. Ex.1009 (Carlson), [0078]. This alarm signal can be "transmitted to a

respective person, to a medical doctor, to a hospital, etc.," corresponding to the claimed one or more other locations. Ex.1009 (Carlson), [0078]. The device can also include GPS functionality, "which ***at any time*** gives ***the location*** of the person using the pulsoximetric sensor monitoring configuration." Ex.1009 (Carlson), [0078] (emphasis added).

177. Lisogurski explains its system can allow for "increased portability," Ex.1011 (Lisogurski), 1:15-18, and describes systems where data from a portable monitor or sensor is collected and transmitted to a central location, Ex.1011 (Lisogurski), 18:11-15, 18:58-65, 20:53-60.

178. It would have been obvious to modify Lisogurski to use GPS to track the location of a person wearing a sensor to track where the person was in case of emergency to allow any medical personnel at the central location to find the person to provide assistance. To add this functionality to Lisogurski, the sensor or monitor would be modified to include a GPS receiver and to periodically transmit the GPS data to the monitor for collection at a server, website, or another monitoring device where medical personnel could react to any emergencies. As I explained in the background section above, integration of GPS data was a standard configuration of medical monitoring systems was a standard configuration of medical monitoring systems, was well-known to those of skill in the art, and had known benefits.

7. Lisogurski and Carlson Describe the Elements of Claims 8 and 16

179. Claims 8 and 16 depend from claims 5 and 13, respectively, and specify "*wherein the receiver is located a first distance from a first one of the plurality of light emitting diodes and a different, second distance from a second one of the light emitting diodes such that the receiver receives a first signal from the first light emitting diode and a second signal from the second light emitting diode*."

180. Lisogurski describes using multiple light sources and multiple detectors "which may be spaced apart." Ex.1011 (Lisogurski), 17:43-45. "Any suitable configuration" of sources and detectors maybe used. Ex.1011 (Lisogurski), 17:39-45. "Sensor unit 312 may include one or more light source 316 for emitting light at one or more wavelengths into a subject's tissue. One or more detector 318 may also be provided in sensor unit 312 for detecting the light that is reflected by or has traveled through the subject's tissue." Ex.1011 (Lisogurski), 17:37-42.

181. There are just two options for how two LEDs can be spaced in relation to a detector: either they are each the same distance from the detector or they are different distances from it. A person of ordinary skill in the art reading Lisogurski's disclosure that the sensors can be spaced apart would have

immediately envisioned both options. Therefore, Lisogurski discloses that each LED can be a different distance from the photodetector.

182. Even if Lisogurski does not explicitly disclose spacing two LEDs different distances from the detector, this configuration would have been obvious. There are just two choices for how to space the LEDs from the detector, and the selection of one of those two ways. It was common to space LEDs different distances from a detector to, for example, account for differences in the performance or intensity of each LED or to interrogate different length and volumes of tissue. LEDs that are different distances from the detector would mean that the propagation lengths of the light in the tissue would be different from the source to the two detectors. This configuration would be advantageous for some algorithms that, for example, were operating on differential signals. Such an approach would be appropriate if characterizing the path length dependent absorption properties of tissue. A configuration with different distances would also be helpful for either reducing motion artifacts or instead for characterizing the tissue motion.

183. Lisogurski explains that "in a system with two light sources… the first light source may be a high efficiency infrared (IR) LED while the one or more additional light sources may be lower efficiency red LEDs." Ex.1011 (Lisogurski), 7:38-8:3. Lisogurski separately measures the signal from each LED. Ex.1011

(Lisogurski), 12:29-33 ("The period from time 216 to time 218 may be referred to as a drive cycle, which includes four segments: a Red light 'on' periods 202, followed by an 'off' period 220, followed by an IR light 'on' period 204, and followed by an 'off' period 220."), Figs. 2A and 2B. Lisogurski can separately use each measured signal, for example, to calculate blood oxygen saturation using the ratio-of-ratios calculation, which is the ratio of the measured IR signal to the measured red signal. Ex.1011 (Lisogurski), 4:45-56; Ex.1019 (Biomedical Engineering Handbook), 769-70. Two lights sources of the same wavelength may be used for increasing signal to noise ratio by acquiring multiple and redundant measurements. *E.g.*, Ex.1011 (Lisogurski), 19:27-31. Two lights sources of the different wavelength may be used to increasing signal to noise ratio by acquiring multiple measurement of each of which may be more or less sensitive to ambient noise or be more or less sensitive to the physiological parameter of interest. Two lights sources of the different wavelength may be used to estimate a physiological property that is not directly observable by measurement with a single wavelength. System level design considerations and the target physiological parameter may make it advantageous to modulate the light sources synchronously at the same frequency with or without a phase offset, synchronously at different frequencies with or without a phase offset, or asynchronously.

184. Therefore, a person of ordinary skill in the art would have understood that Lisogurski's photodetector detects a red signal from the red LED ("*a first signal from the first light emitting diode*") and an infrared signal from the infrared LED ("*a second signal from the second light emitting diode*"). The detected IR signal corresponds to the "*first signal*" and the detected red signal corresponds to the "*second signal*."

8. Lisogurski and Carlson Describe the Elements of Claims 9 and 17

185. Claims 9 and 17 depend from claims 8 and 16, respectively, and specify "*wherein the output signal is generated in part by comparing the first and second signals*."

186. Lisogurski describes using red and infrared LEDs "because it has been observed that highly oxygenated blood will absorb relatively less red light and more IR light than blood with a lower oxygen saturation. *By comparing the intensities of two wavelengths* at different points in the pulse cycle, it is possible to estimate the blood oxygen saturation of hemoglobin in arterial blood." Ex.1011 (Lisogurski), 4:45-51 (emphasis added). This comparison can be done, for example, by calculating blood oxygen saturation using the ratio-of-ratios calculation, which is the ratio of the measured IR signal to the measured red signal.

Ex.1011 (Lisogurski), 4:45-56; Ex.1019 (Biomedical Engineering Handbook), 769-70.

187. Therefore, Lisogurski describes generating an output signal by comparing the detected infrared signal ("*first signal*") and the detected red signal ("*second signal*").

9. Lisogurski and Carlson Describe the Elements of Claim 10

188. Claim 10 depends from claim 5 and specifies "*wherein the output signal comprises one or more physiological parameters, and the remote device is capable of storing a history of at least a portion of the one or more physiological parameters over a specified period of time*." Lisogurski describes this limitation for the same reasons identified above for Claim 13, limitation (g)(2) (§VII.A.4.g.ii).

B. Lisogurski, Carlson, and Mannheimer Render Obvious Claims 8-9 and 16-17

189. As explained above, Lisogurski alone or in combination with Carlson renders obvious all of the elements of claims 8-9 and 16-17. These claims are also unpatentable based on Lisogurski and Carlson in combination with Mannheimer.

1. Overview of Mannheimer

190. Mannheimer discloses a pulse oximetry monitoring and measurement system. Ex.1008 (Mannheimer), 6:17-36, Figs. 2, 4. The sensor uses one or more

LEDs to alternately emit red and infrared light at a desired modulation frequency. Ex.1008 (Mannheimer), 6:20-21, 6:66-7:4. The emitted light is dispersed by the user's tissue, and the reflected light is collected by one or more detectors. Ex.1008 (Mannheimer), 6:22-23.

191. Mannheimer discloses using emitters that are spaced at different distances from a detector in order to obtain deep and shallow tissue measurements. Ex.1008 (Mannheimer), 1:40-54, 2:1-6, 3:25-35, Figs. 1B, 7. For example, Mannheimer includes an embodiment with two LEDs each spaced a different distance from a single detector. Ex.1008 (Mannheimer), Fig. 1B, 3:38-40, 5:58-62. In this way, reflected light from a surface layer of skin, which is non-vascular and susceptible to noise from motion and ambient light, can be removed so that light reflected by deeper, more vascular tissues layers can be used to identify a pulsatile signal of interest. Ex.1008 (Mannheimer), 3:25-35, 5:1-5.

2. A Person of Ordinary Skill in the Art Would Have Modified Lisogurski and Carlson to Incorporate Elements Shown in Mannheimer

192. As described with respect to Lisogurski and Carlson, a person of ordinary skill in the art would have found it obvious to incorporate a plurality of lenses into the measurement system of Lisogurski and to increase emitter pulse rate, as described by Carlson, in order to optimize power consumption and increase the signal-to-noise ratio of measured signals. A person of ordinary skill in the art

reading Lisogurski and Carlson would have looked to other references that disclosed additional techniques for improving the operation of an optical sensing systems. It was part of the ordinary design process to characterize the positive and negative attributes of the many ways to improve the operation of a device by comparing and selecting or combining, different designs and techniques.

193. Lisogurski recognizes that light is attenuated differently depending on the tissue, and that skin pigmentation in particular can have a variable effect on signal quality. Ex.1011 (Lisogurski), 19:42-50 ("The interaction of the emitted light with the subject may cause the light to become attenuated… [T]he attenuation or the light may depend on… the tissue with which the light interacts."), 44:43-48 ("The red waveforms may be 25% of the intensity of the IR waveforms, as may occur in patients with dark skin pigmentation"). Mannheimer describes a solution to this problem, teaching that interference from skin can be removed by using signal detected from LEDs spaced different distances from a detector. Ex.1008 (Mannheimer), 3:25-35, 5:1-5.

194. A person of ordinary skill in the art would have looked to Mannheimer for the additional reason that it describes how to position emitters at different distances relative to a detector. While Lisogurski teaches using multiple light sources and multiple detectors "which may be spaced apart," Ex.1011 (Lisogurski), 17:45, it does not specifically identify the spacing that should be

used. A person of ordinary skill in the art would have looked to how others in the art had arranged the LEDs with respect to a sensor, one example of which is described in Mannheimer.

195. Lisogurski, Carlson and Mannheimer are also analogous references, each describing techniques for improving the measurements taken by optical sensing devices, such as pulse oximeters. The person of ordinary skill in the art would have considered the references together when implementing a system based on Lisogurski's teachings.

196. The person of ordinary skill in the art would have been motivated to include features from Carlson and Mannheimer in Lisogurski's system. These features, and more specific reasons for combining them, are described in the analyses below.

3. Claims 8 and 16

197. Claims 8 and 16 depend from claims 5 and 13, respectively, and specify "*wherein the receiver is located a first distance from a first one of the plurality of light emitting diodes and a different, second distance from a second one of the light emitting diodes such that the receiver receives a first signal from the first light emitting diode and a second signal from the second light emitting diode.*"

198. Fig. 1B of Mannheimer shows emitters E_1 and E_2 and detector D. Ex.1008 (Mannheimer), 5:58-62.

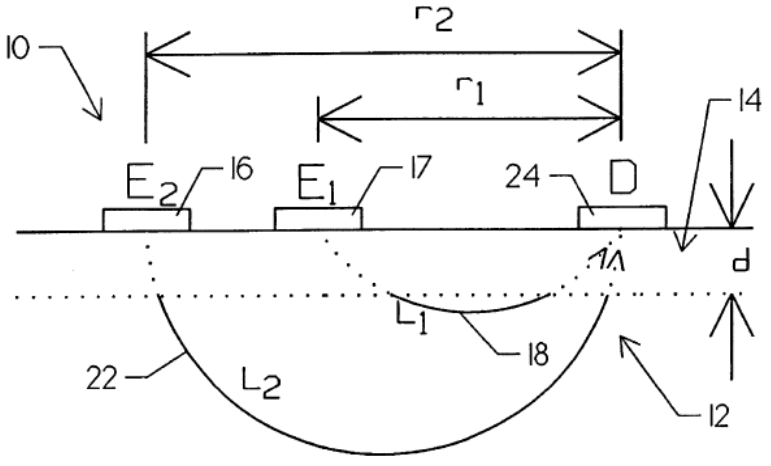

FIG. 1 B

Emitter E_1 is located a first distance r_1 from the detector. Ex.1008 (Mannheimer), 3:23. Emitter E_2 is located a second distance r_2 from the detector, wherein r_2 is greater than r_1. Ex.1008 (Mannheimer), 3:24. The detector receives light signal 18 from emitter E_1 that has a path length L_1. Ex.1008 (Mannheimer), 3:18-21. The detector receives light signal 22 from emitter E_2 that has a path length L_2, wherein L_2 is greater than L_1. Ex.1008 (Mannheimer), 3:19-22.

199. It would have been obvious to spatially arrange the emitters and detector of the Lisogurski sensor in the manner described by Mannheimer. Lisogurski describes using multiple light sources and multiple detectors "which may be spaced apart." Ex.1011 (Lisogurski), 17:45. "Any suitable configuration" of sources and detectors maybe used. Ex.1011 (Lisogurski), 17:39-45. A person

of ordinary skill in the art who is interested in identifying such a suitable configuration would look to Mannheimer, which provides a detailed disclosure of an advantageous configuration.

200. A person of ordinary skill in the art would have included in Lisogurski's sensor two red LEDs spaced different distances from a detector, as described in Mannheimer, and two IR LEDs also spaced different distances from the detector. Configuring the to be emitters different distances from a detector has known advantages, such as by allowing for the removal of the effects of light interaction with a surface layer of skin so that a signal of interest can be extracted from a deeper tissue layer. Ex.1008 (Mannheimer), 3:25-35, 5:1-5. A person of ordinary skill in the art would have been motivated to arrange the Lisogurski emitters relative to the detector as described by Mannheimer in order to remove interference caused by a person's skin, which Lisogurski recognizes can be a problem.

4. Claims 9 and 17

201. Claims 9 and 17 depend from claims 8 and 16, respectively, and specify "*wherein the output signal is generated in part by comparing the first and second signals*."

202. Mannheimer describes "calculating an arterial oxygen saturation level of [a] patient" from the intensity of signals 18 and 22. Ex.1008 (Mannheimer),

2:16-18. This calculation includes determining a first intensity I_1 corresponding to the signal 18 detected from light emitted by E_1 and a second intensity I_2 corresponding to the signal 20 detected from light emitted by E_2. Ex.1008 (Mannheimer), 3:35-54, 4:15-20.

203. Mannheimer then describes calculating a ratio R from I_1 and I_2 for purposes of calculating "a result related only to the arterial blood saturation of…deeper tissue." Ex.1008 (Mannheimer), 3:55-5:9; *see also* Ex.1008 (Mannheimer), 5:23-57 (providing an alternative calculation for the ratio R based on I_1 and I_2). Therefore, Mannheimer compares a signal 18 reflected by surface tissue and a signal 22 reflected by deep tissue in order to subtract the effects of light reflected by the surface tissue.

204. It would have been obvious for Lisogurski's sensor to perform the comparison in the manner described by Mannheimer in order to remove the effects of noise at the surface layer of skin. Lisogurski recognizes that light is attenuated differently depending on the tissue, and that skin pigmentation in particular can have a variable effect on signal quality. Ex.1011 (Lisogurski), 19:42-50 44:43-48. By removing light reflected by the surface layer of the skin, as described in Mannheimer, the adverse effect on signal quality, identified by Lisogurski, can be mitigated. A person of ordinary skill in the art would have been motivated to use the comparison described in Mannheimer in implementing Lisogurski's system in

order to increase the signal-to-noise ratio and provide an improved measurement device.

* * *

I, Brian W. Anthony, do hereby declare and state, that all statements made herein of my own knowledge are true and that all statements made on information and belief are believed to be true; and further that these statements were made with the knowledge that willful false statements and the like so made are punishable by fine or imprisonment, under Section 1001 of Title 18 of the United States Code.

Executed on: April 10, 2019

Exhibit List

The list of exhibits that I relied upon in forming my opinions is below.

Exhibit #	Reference Name
1001	U.S. Patent No. 9,651,533
1002	File History of U.S. Patent No. 9,651,533
1003	Declaration of Brian W. Anthony, PhD
1004	Proof of Service of Summons in Omni MedSci, Inc. v. Apple Inc., No. 2:18-cv-134 (E.D. Tex.)
1005	U.S. Patent Publication No. 2012/0197093 ("Valencell '093")
1006	U.S. Patent Publication No. 2010/0217099 ("Valencell '099")
1007	U.S. Patent No. 6,505,133 ("Hanna")
1008	U.S. Patent No. 5,746,206 ("Mannheimer")
1009	U.S. Patent Publication No. 2005/0049468 ("Carlson")
1010	U.S. Patent No. 9,596,990 ("Park")
1011	U.S. Patent No. 9,241,676 ("Lisogurski")
1012	RESERVED
1013	RESERVED
1014	U.S. Patent No. 8,172,761 ("Rulkov")
1015	U.S. Provisional Application No. 61/747,487
1016	U.S. Provisional Application No. 61/747,472
1017	U.S. Provisional Application No. 61/747,477
1018	U.S. Provisional Application No. 61/754,698
1019	"The Biomedical Engineering Handbook," by Joseph D. Bronzino (1995) ("BE Handbook")
1020	M. Kranz, et al., The mobile fitness coach: Towards individualized skill assessment using personalized mobile devices, Pervasive and Mobile Computing (June 2012)

Exhibit #	Reference Name
1021	Patel, et al., A review of wearable sensors and systems with application rehabilitation, Journal of Neuroengineering & Rehabilitation (2012)
1022	ScienceDirect Report on M. Kranz, et al., The mobile fitness coach: Towards individualized skill assessment using personalized mobile devices, Pervasive and Mobile Computing (2012), available at https://www.sciencedirect.com/science/article/pii/S1574119212000673?via%3Dihub
1023	"The Usage of Tablets in the HealthCare Industry," by Rauf Adil, available at https://www.healthcareitnews.com/blog/usage-tablets-healthcare-industry (Aug. 2, 2012)
1024	A. More, Bluetooth Low Enegery: Wireless Connectivity for Medical Monitoring, Journal of Diabetes Science & Technology (Mar. 2010)
1025	1. Absorption Coefficient and Penetration Depth, available at https://eng.libretexts.org/Bookshelves/Materials_Science/Supplemental_Modules_(Materials_Science)/The_Science_of_Solar (Accessed October 29, 2018)
1026	Buttussi, Fabio, Chittaro, Luca, MOPET: A context-aware and user-adaptive wearable system for fitness training (2008)
1027	P. Baum, et al., Strategic Intelligence Monitor on Personal Health Systems, Phase 2: Market Developments - Remote Patient Monitoring and Treatment, Telecare, Fitness/Wellnes and mHealth, JRC Scientific and Policy Reports of European Commission (2013)
1028	Compendium of Chemical Terminology Gold Book Version 2.3.3, February 24, 2014
1029	M. Swan, Senior Mania! The Internet of Things, Wearable Computing, Objective Metrics, and the Quantified Self 2.0, Journal of Sensor and Actuator Networks (2012)
1030	Merriam-Webster's Collegiate Dictionary, Eleventh Edition
1031	U.S. Patent Publication No. 2012/0041767 ("Hoffman")
1032	U.S. Patent No. 7,278,966 ("Hjelt")
1033	Lister et al., Optical properties of human skin (Journal of Biomedical Optics 2012)
1034	Bashkatov et al., Optical properties of human skin, subcutaneous and mucous tissues in the wavelength range from 400 to 2000 nm, Journal of Physics D: Applied Physics (2005)

Exhibit #	Reference Name
1035	E.F. Schubert, Light-Emitting Diodes (Cambridge Univ. Press, 2nd ed. reprinted 2014)
1036	Barolet, Daniel, Light-Emitting Diodes (LEDs) in Dermatology (Seminars in Cutaneous Medicine and Surgery 2008)
1037	RESERVED
1038	RESERVED
1039	RESERVED
1040	RESERVED
1041	Exhibit E from , Excerpts from the American Heritage Dictionary, 5th Edition, filed January 14, 2019, No. 2:18-cv-134-RWS
1042	Exhibit O, Excerpts from the American Heritage Dictionary, 5th Edition. Filed January 14, 2019. No. 2:18-cv-134-RWS
1043	RESERVED
1044	RESERVED
1045	RESERVED
1046	Exhibit G, Excerpts from Merriam-Webster's Collegiate Dictionary, Eleventh Edition, No. 2:18-cv-134-RWS
1047	Exhibit N, Excerpts from Merriam-Webster's Collegiate Dictionary, Eleventh Edition, No. 2:18-cv-134-RWS
1048	U.S. Patent No. 6,044,283 ("Fein")
1049	U.S. Patent No. 5,774,213 ("Trebino")
1050	U.S. Patent No. 5,855,550 ("Lai")
1051	U.S. Patent No. 6,898,451 ("Wuori")
1052	U.S. Patent No. 4,972,331 ("Chance")