Trials@uspto.gov
571-272-7822

Paper No. 39
Date: October 14, 2020

UNITED STATES PATENT AND TRADEMARK OFFICE

BEFORE THE PATENT TRIAL AND APPEAL BOARD

APPLE INC.,
Petitioner,

v.

OMNI MEDSCI, INC.,
Patent Owner.

Case IPR2019-00916
Patent 9,651,533 B2

Before GRACE KARAFFA OBERMANN, JOHN F. HORVATH, and SHARON FENICK, *Administrative Patent Judges.*

PER CURIAM

Opinion Concurring filed by *Administrative Patent Judge* HORVATH

JUDGMENT
Final Written Decision
Determining All Challenged Claims Unpatentable
35 U.S.C. § 318(a)

I. INTRODUCTION

A. Background

Apple Inc. ("Petitioner") filed a Petition requesting *inter partes* review of claims 5, 7–10, 13, and 15–17 ("the challenged claims") of U.S. Patent No. 9,651,533 B2 (Ex. 1001, "the '533 patent"). Paper 1 ("Pet."), 3. Omni MedSci Inc. ("Patent Owner"), filed a Preliminary Response. Paper 10 ("Prelim. Resp."). Upon consideration of the Petition and Preliminary Response, we instituted *inter partes* review of all challenged claims on all grounds raised. Paper 16 ("Dec. Inst.").

Patent Owner filed a Response to the Petition (Paper 23, "PO Resp."), Petitioner filed a Reply (Paper 28, "Pet. Reply"), and Patent Owner filed a Sur-Reply (Paper 32, "PO Sur-Reply"). An oral hearing was held on July 16, 2020, and the hearing transcript is included in the record. *See* Paper 37 ("Tr.").

We have jurisdiction under 35 U.S.C. § 6(b). This is a Final Written Decision under 35 U.S.C. § 318(a) and 37 C.F.R. § 42.73. For the reasons set forth below, we find Petitioner has shown by a preponderance of evidence that claims 5, 7–10, 13, and 15–17 of the '533 patent are unpatentable.

B. Related Matters

Petitioner and Patent Owner identify the following as matters that can affect or be affected by this proceeding: pending U.S. Patent Application Nos. 10/188,299, 10/172,523, 15/594,053, 16/015,737, and 16/241,628; *Apple Inc. v. Omni MedSci Inc.*, IPR2019-00913 (PTAB); and *Omni MedSci*

Inc. v. Apple Inc., 2-18-cv-00134-RWD (E.D. Tex.).[1] *See* Pet. x; Paper 7, 1–2.

C. Evidence Relied Upon[2]

Reference		**Date**	**Exhibit**
Mannheimer	U.S. 5,746,206	May 5, 1998	1008
Carlson	U.S. 2005/0049468 A1	Mar. 3, 2005	1009
Lisogurski	U.S. 9,241,676 B2	May 31, 2012[3]	1011

D. Instituted Grounds of Unpatentability

Claims Challenged	**Basis**	**References**
5, 7–10, 13, and 15–17	§ 103(a)	Lisogurski and Carlson
8, 9, 16, and 17	§ 103(a)	Lisogurski, Carlson, and Mannheimer

II. ANALYSIS

A. The '533 Patent

The '533 patent was filed on October 6, 2015, and claims priority to a utility application filed on December 17, 2013, and a provisional application filed on December 31, 2012. Ex. 1001, codes (22), (60), (63), 1:10–14. The '533 patent is directed toward a wearable physiological measurement

[1] This case was transferred to the Northern District of California. *See* Paper 11, 1; Paper 13, 1; Ex. 1058, 9.

[2] Petitioner also relies upon the Declaration of Brian Anthony, Ph.D., (Ex. 1003).

[3] Petitioner relies on the filing date of Lisogurski to establish its status as prior art. *See* Pet. 21.

system. *Id.* code (57). The system is depicted in Figure 24 of the '533 patent, which is reproduced below.

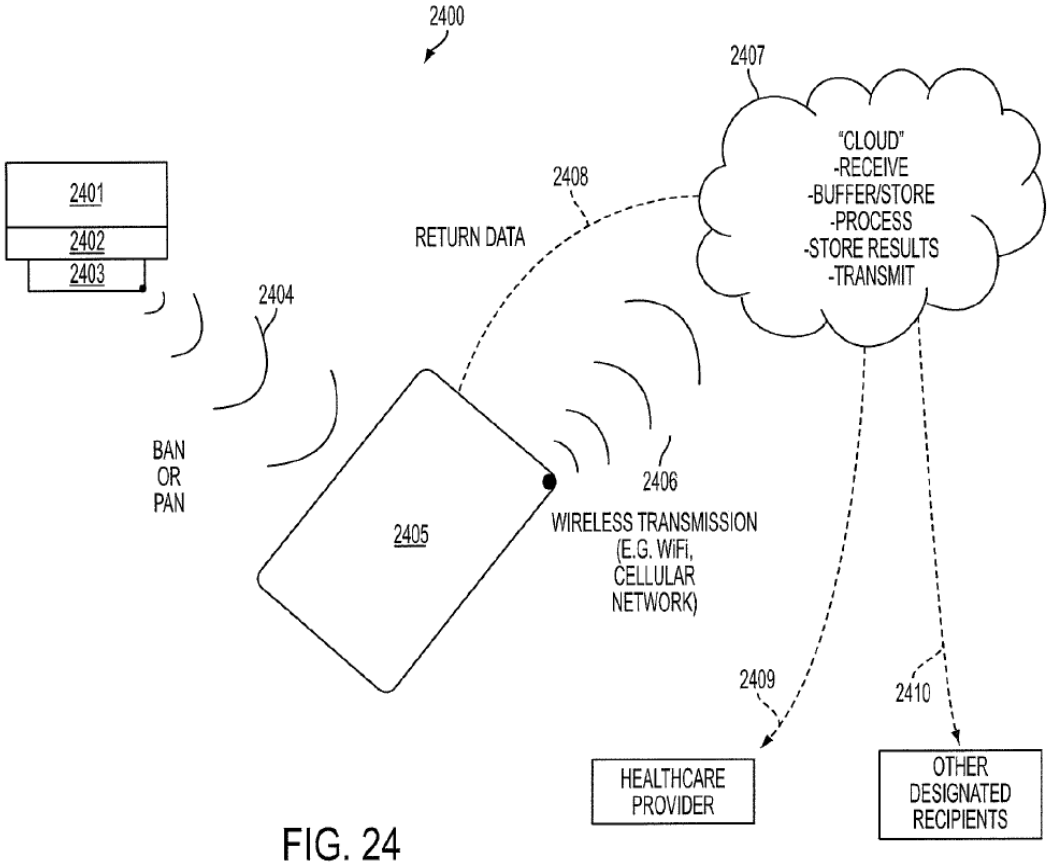

FIG. 24

Figure 24 is a schematic illustration of a physiological measurement system that includes wearable measurement device 2401, personal device 2405, and cloud based server 2407. *Id.* at 7:7–10, 26:49–27:20.

The "wearable measurement device [is] for measuring one or more physiological parameters." *Id*. at 5:35–37. A schematic illustration of such a device is shown in Figure 18 of the '533 patent, which is reproduced below.

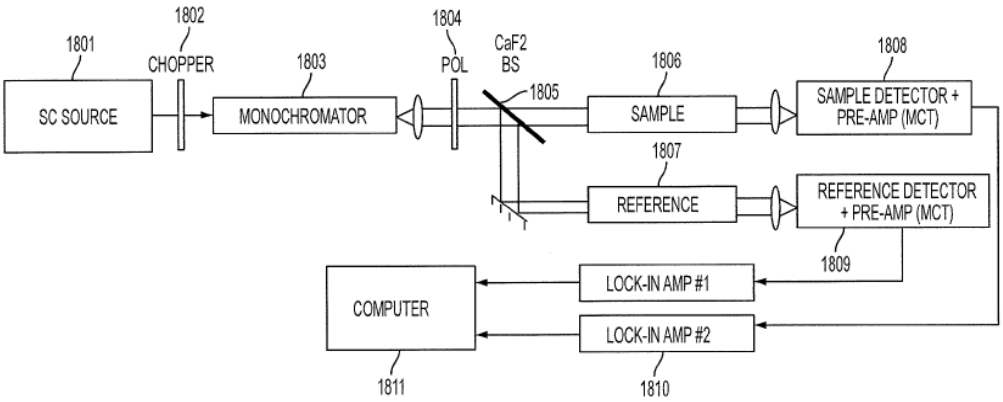

FIG. 18

Figure 18 is a schematic diagram of a wearable physiological measurement device to "subtract out (or at least minimize the adverse effects of) light source fluctuations." *Id.* at 18:43–46. The device includes light source 1801 made from a plurality of light emitting diodes that output an optical beam at one or more wavelengths, including at least one wavelength between 700 and 2500 nanometers. *Id.* at 5:37–43, 18:46–48. The device includes a plurality of lenses that receive a portion of the output optical beam from the light source and deliver an analysis beam to a sample. *Id.* at 5:47–50, 18:46–55. The device includes a receiver that receives at least a portion of the analysis beam that has been reflected from or transmitted through the sample, and processes that signal to generate an output signal. *Id.* at 5:51–54, 18:55–59.

Light source 1801 "is configured to increase signal-to-noise ratio by increasing a light intensity from at least one of the plurality of semi-conductor sources [e.g., LEDs] and by increasing a pulse rate of at least one of the plurality of semiconductor sources." *Id.* at 5:43–47. For example, light source 1801 can be "an active illuminator" that allows "higher signal-

to-noise ratios [to] be achieved." *Id.* at 16:54–58. This can be done, for example, "us[ing] modulation and lock-in techniques" in which the "light source may be modulated, and then the detection system [is] synchronized with the light source." *Id.* at 16:58–62. "[N]arrow band filtering around the modulation frequency may be used to reject noise outside the modulation frequency." *Id.* at 16:64–65.

The physiological measurement system also includes personal device 2405 having a wireless receiver, a wireless transmitter, a display, a microphone, a speaker, one or more buttons or knobs, a microprocessor and a touch screen. *Id.* at 5:54–59, 27:3–7. Personal device 2405 receives and processes at least a portion of the output signal generated by wearable measurement device 2401, and stores and displays the processed output signal. *Id.* at 5:59–61, 27:10–12. Personal device 2405 also transmits at least a portion of the processed output signal over a wireless transmission link to a remote device such as an internet or "cloud" based server. *Id.* at 5:61–63, 26:30–34, 27:12–15. Personal device 2405 can be "a smart phone, tablet, cell phone, PDA, or computer," or some "other microprocessor-based device." *Id.* at 26:37–40, 26:49–55.

The physiological measurement system also includes remote device 2407 that receives the portion of the processed output signal transmitted by personal device 2405 as an output status. *Id.* at 5:63–66, 26:30–42, 27:12–15. Remote device 2407 processes the output status to generate and store processed data, and stores a history of the output status over a period of time. *Id.* at 5:66–6:1–3, 27:21–29, 27:34–37.

B. Illustrative Claim

Claim 13 of the ’533 patent is an independent and representative claim, and is reproduced below.

> 13. A measurement system comprising:
>
> a wearable measurement device for measuring one or more physiological parameters, including a light source comprising a plurality of semiconductor sources that are light emitting diodes, the light emitting diodes configured to generate an output optical beam with one or more optical wavelengths, wherein at least a portion of the one or more optical wavelengths is a near-infrared wavelength between 700 nanometers and 2500 nanometers,
>
> the light source configured to increase signal-to-noise ratio by increasing a light intensity from at least one of the plurality of semiconductor sources and by increasing a pulse rate of at least one of the plurality of semiconductor sources;
>
> the wearable measurement device comprising a plurality of lenses configured to receive a portion of the output optical beam and to deliver an analysis output beam to a sample;
>
> the wearable measurement device further comprising a receiver configured to receive and process at least a portion of the analysis output beam reflected or transmitted from the sample and to generate an output signal, wherein the wearable measurement device receiver is configured to be synchronized to pulses of the light source;
>
> a personal device comprising a wireless receiver, a wireless transmitter, a display, a microphone, a speaker, one or more buttons or knobs, a

> microprocessor and a touch screen, the personal device configured to receive and process at least a portion of the output signal, wherein the personal device is configured to store and display the processed output signal, and wherein at least a portion of the processed output signal is configured to be transmitted over a wireless transmission link; and
>
> a remote device configured to receive over the wireless transmission link an output status comprising the at least a portion of the processed output signal, to process the received output status to generate processed data and to store the processed data and wherein the remote device is capable of storing a history of at least a portion of the received output status over a specified period of time.

Ex. 1001, 30:46–31:20.

Claim 5 is an independent claim that recites a measurement system that is substantially similar to the measurement system recited in claim 13, except that claim 5 is broader because it does not require (a) the light source, plurality of lenses, and receiver to be components of a wearable measurement device, (b) measurement of one or more physiological parameters, or (c) the remote device to be capable of storing a history of at least a portion of the received output status over a specified period of time. *Compare id.* at 29:43–30:10, *with id*. at 30:46–31:20. Claims 7–10 depend from claim 5, and claims 15–17 depend from claim 13. *Id*. at 30:15–37, 32:1–18.

C. Level of Ordinary Skill in the Art

Petitioner, relying on the testimony of Dr. Anthony, identifies a person of ordinary skill in the art ("POSITA") as someone who "would have

[had] a good working knowledge of optical sensing techniques and their applications, and familiarity with optical system design and signal processing techniques." Pet. 16; Ex. 1003 ¶ 35. Such a person would have obtained such knowledge through "an undergraduate education in engineering (electrical, mechanical, biomedical, or optical) or a related field of study, along with relevant experience studying or developing physiological monitoring devices . . . in industry or academia." *Id*. Patent Owner does not dispute this. *See* PO Resp. 8.

We find Petitioner's undisputed definition of the person of ordinary skill in the art to be consistent with the problems and solutions disclosed in the patent and prior art of record, and adopt it as our own. *See, e.g.*, *In re GPAC Inc.*, 57 F.3d 1573, 1579 (Fed. Cir. 1995).

D. Claim Construction

In *inter partes* reviews, we interpret a claim "using the same claim construction standard that would be used to construe the claim in a civil action under 35 U.S.C. 282(b)." 37 C.F.R. § 42.100(b) (2019). Under this standard, we construe the claim "in accordance with the ordinary and customary meaning of such claim as understood by one of ordinary skill in the art and the prosecution history pertaining to the patent." *Id.* Only claim terms which are in controversy need to be construed and only to the extent necessary to resolve the controversy. *See Nidec Motor Corp. v. Zhongshan Broad Ocean Motor Co.*, 868 F.3d 1013, 1017 (Fed. Cir. 2017).

1. Beam, plurality of lenses, pulse rate

Petitioner requests construction of the terms "beam," "plurality of lenses," and "pulse rate." *See* Pet. 18–20. We declined to expressly construe these terms in our Institution Decision because their construction

was not needed to resolve any dispute between the parties. *See* Dec. Inst. 9. Neither party disputes that initial determination, which we maintain here. *See* PO Resp. 8–13; Pet. Reply 2–9.

2. Personal device

We expressly construed this term in our Institution Decision to resolve a dispute between the parties. *See* Dec. Inst. 11–12. Specifically, we construed the term to include, but not be limited to, "a computer or microprocessor-based device having a wireless receiver, a wireless transmitter, a display, a microphone, a speaker, one or more buttons or knobs, a microprocessor, and a touch screen." *Id*. Neither party disputes that construction, which we maintain here. *See* PO Resp. 8–13; Pet. Reply 2–9.

3. Light source

In our Institution Decision, we expressly construed "a light source comprising a plurality of semiconductor sources that are light emitting diodes . . . configured to increase signal-to-noise ratio by . . . increasing a pulse rate of at least one of the plurality of semiconductor sources." Dec. Inst. 9–11. In doing so, we noted the scant support for this term in the Specification, which twice repeats the same phrase with no explanation of its meaning. *Id.* at 10. We further noted the Specification and claims were amended at the same time to include this phrase, with no indication of how the phrase was supported by the originally filed Specification. *Id.* at 10, n.4. Nonetheless, we construed the phrase to mean "a light source containing two or more light emitting diodes (semiconductor sources), wherein at least one of the light emitting diodes is capable of having its pulse rate increased to increase a signal-to-noise ratio." *Id.* at 10.

Patent Owner disputes this construction, arguing it "eliminat[es] the claimed 'actor' that increases the pulse rate, *i.e.*, the device," and erroneously "replaces the claim term 'configured to' with the broader phrase 'is capable of.'" PO Resp. 9. Patent Owner argues the correct construction of this term is "a light source, containing two or more light emitting diodes (semiconductor sources), where the light source is configured to increase the pulse rate of at least one of the light emitting diodes to increase signal-to-noise ratio."[4] *Id.* at 13. Patent Owner argues the Specification supports this construction by disclosing "'use of an active illuminator, [whereby] a number of advantages may be achieved' including 'high signal-to-noise ratios.'" *Id.* at 12 (quoting Ex. 1001, 16:54–58).

We are not persuaded by Patent Owner's arguments. First, the limitation does not recite a "device" or "actor" configured to increase signal-to-noise by increasing LED pulse rate. Instead, it recites a "light source comprising a plurality of . . . light emitting diodes," where the light source itself—i.e., the plurality of LEDs—is "configured to increase signal-to-noise ratio by increasing . . . a pulse rate of at least one of the plurality of [LEDs]." Ex. 1001, 16:48–50, 16:56–60. That is, the limitation recites a plurality of LEDs that are configured to increase signal-to-noise by increasing the pulse rate of at least one of the LEDs. No "device" or "actor" is recited to increase the pulse rate of the LEDs. Thus, the only reasonable construction is that the

[4] We note here that Patent Owner contradicts this proposed construction in its Sur-Reply, where Patent Owner argues "[t]he claim requires a light source 'configured to increase SNR,' not a light source 'configured to increase a pulse rate.'" PO Sur-Reply 4.

LEDs are "capable" of having their pulse rate increased to increase signal-to-noise, as we initially construed this phrase.

Patent Owner argues that our construction is incorrect because "capable of" is a broader term than "configured to" and, therefore, "configured to" does not mean "capable of." PO Resp. 10 (citing *Aspex Eyewear, Inc. v. Marchon Eyewear, Inc.*, 672 F.3d 1335, 1349 (Fed. Cir. 2012)). In the context of these claims, we disagree. First, we note that *Aspex Eyewear* did not consider and did not construe "configured to." *See Aspex Eyewear,* 672 F.3d at 1348–49. Instead, the term "magnetic members *adapted to* extend" was construed to mean "magnetic members . . . *made to* extend." *Id.* at 1348 (emphases added). By contrast, the proper construction of "configured to" was considered in *Superior Industries, Inc. v. Masaba, Inc.*, 650 Fed. App'x. 994 (Fed. Cir. 2016). In *Superior Industries*, the Federal Circuit considered and approved a district court's construction of a "support frame . . . *configured to* support an end of an earthen ramp" to mean "the support frame be *capable of* supporting an earthen ramp." *Id.* at 996, 998 (emphases added).

Accordingly, for these reasons, we maintain our construction of this limitation to mean "a light source containing two or more light emitting diodes (semiconductor sources), wherein at least one of the light emitting diodes is capable of having its pulse rate increased to increase a signal-to-noise ratio."

E. Overview of the Prior Art

1. Lisogurski

Lisogurski discloses a "physiological monitoring system [that] monitor[s] one or more physiological parameters of a patient . . . using one

or more physiological sensors." Ex. 1011, 3:44–46. The physiological sensors may include a "pulse oximeter [that] non-invasively measure[s] the oxygen saturation of a patient's blood." *Id.* at 3:62–64. The pulse oximeter includes "a light sensor that is placed at a site on a patient, typically a fingertip, toe, forehead, or earlobe." *Id.* at 4:6–7. The light sensor "pass[es] light through blood perfused tissue and photoelectrically sense[s] the absorption of the light in the tissue." *Id.* at 4:8–11. The light sensor emits "one or more wavelengths [of light] that are attenuated by the blood in an amount representative of the blood constituent concentration," including red and infrared (IR) wavelengths of light. *Id.* at 4:42–48.

Figure 3 of Lisogurski is reproduced below.

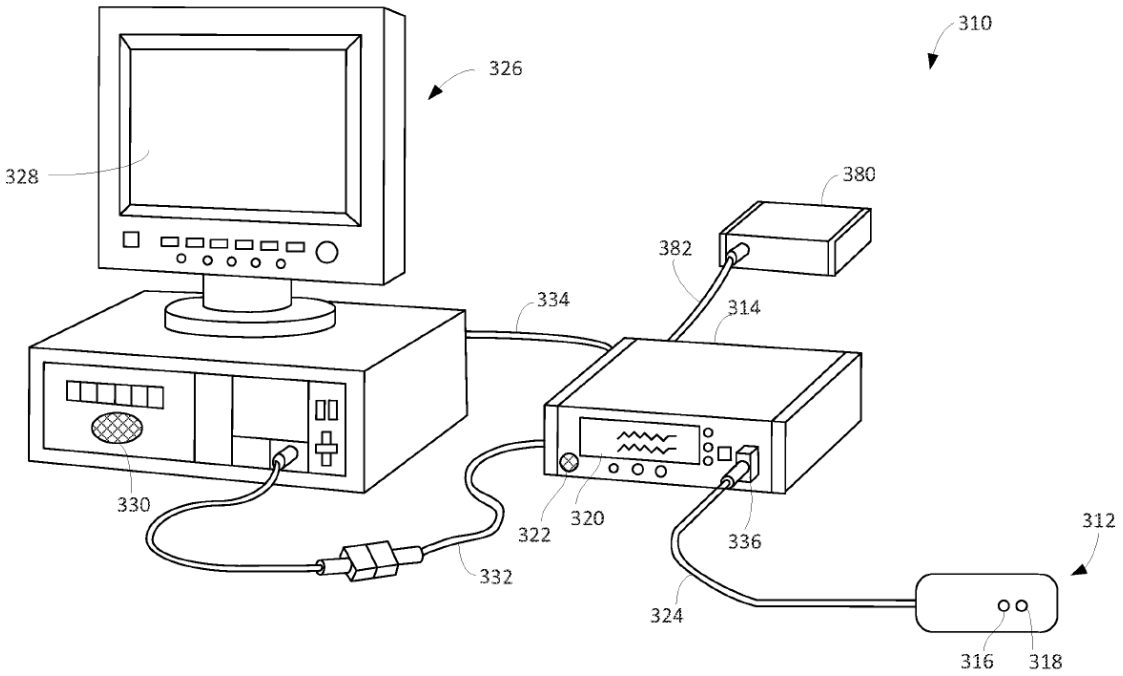

FIG. 3

Figure 3 of Lisogurski is "a perspective view of an embodiment of a physiological monitoring system." *Id.* at 2:23–25. The system includes

sensor 312, monitor 314, and multi-parameter physiological monitor ("MPPM") 326. *Id.* at 17:35–36, 18:44–45. Sensor 312 includes "one or more light sources 316 for emitting light at one or more wavelengths" and detector 318 for "detecting the light that is reflected by or has traveled through the subject's tissue." *Id.* at 17:37–42. Sensor 312 may have "[a]ny suitable configuration of light source 316 and detector 318," and "may include multiple light sources and detectors [that] may be spaced apart." *Id.* at 17:42–45. Light source 316 may include "LEDs of multiple wavelengths, for example a red LED and an IR [LED]." *Id.* at 19:25–27. Sensor 312 may be "wirelessly connected to monitor 314." *Id.* at 17:57–59.

Monitor 314 "calculate[s] physiological parameters based at least in part on data relating to light emission . . . received from one or more sensor units such as sensor unit 312." *Id.* at 17:59–62. Monitor 314 includes "display 320 . . . to display the physiological parameters," and "speaker 322 to provide an audible . . . alarm in the event that a subject's physiological parameters are not within a predefined normal range." *Id.* at 18:3–10. Monitor 314 is communicatively coupled to MPPM 326, with which it "may communicate wirelessly." *Id.* at 18:58–61. Monitor 314 may also be "coupled to a network to enable the sharing of information with servers or other workstations." *Id.* at 18:62–65.

MPPM 326 may "calculate physiological parameters and . . . provide a display 328 for information from monitor 314." *Id.* at 18:49–52. MPPM 326 may also be "coupled to a network to enable the sharing of information with servers or other workstations." *Id.* at 18:62–65. The remote network servers may "be used to determine physiological parameters," and may display the parameters on a remote display, display 320 of monitor 314, or

display 328 of MPPM 326. *Id.* at 20:53–58. The remote servers may also "publish the data to a server or website," or otherwise "make the parameters available to a user." *Id.* at 20:58–60.

Lisogurski discloses the monitoring system shown in Figure 3, described above, "may include one or more components of physiological monitoring system 100 of FIG. 1." *Id.* at 17:32–35. Lisogurski further discloses that although "the components of physiological monitoring system 100 . . . are shown and described as separate components. . . . the functionality of some of the components may be combined in a single component," and "the functionality of some of the components . . . may be divided over multiple components." *Id.* at 15:66–16:9. Figure 1 of Lisogurski is reproduced below.

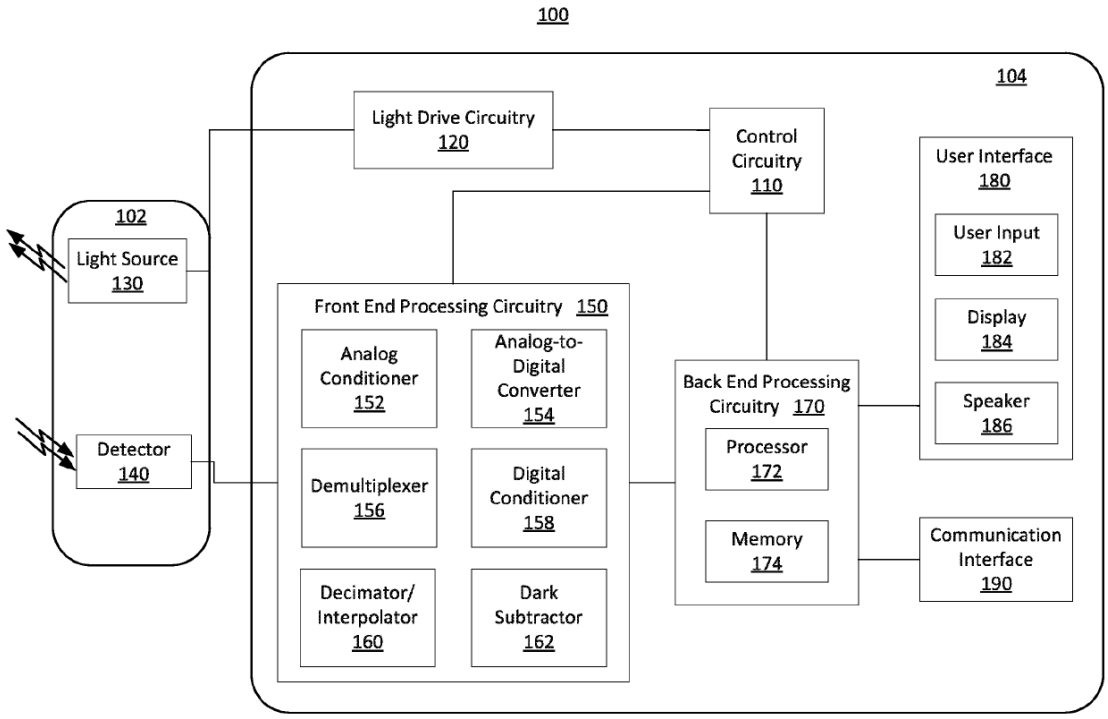

FIG. 1

Figure 1 of Lisogurski is a "block diagram of an illustrative physiological monitoring system." *Id.* at 2:11–13. The system includes "sensor 102 and monitor 104 for generating and processing physiological signals of a subject." *Id.* at 10:44–46. Sensor 102 includes "light source 130 and detector 140." *Id.* at 10:48–49. Light source 130 includes "a Red light emitting light source and an IR light emitting light source," such as Red and IR emitting LEDs, with the IR LED emitting light with a "wavelength [that] may be between about 800 nm and 1000 nm." *Id.* at 10:52–58. Detector 140 "detect[s] the intensity of light at the Red and IR wavelengths," converts them to an electrical signal, and "send[s] the detection signal to monitor 104, where the detection signal may be processed and physiological parameters may be determined." *Id.* at 11:9–10, 11:20–23.

Monitor 104 includes user interface 180, communication interface 190, and control circuitry 110 for controlling (a) light drive circuitry 120, (b) front end processing circuitry 150, and (c) back end processing circuitry 170 via "timing control signals." *Id.* at 11:33–38, Fig. 1. Light drive circuitry 120 "generate[s] a light drive signal . . . used to turn on and off the light source 130, based on the timing control signals." *Id.* at 11:38–40. The light drive signal "control[s] the intensity of light source 130 and the timing of when the light source 130 is turned on and off." *Id.* at 11:50–54. Front end processing circuitry 150 "receive[s] a detection signal from detector 140 and provides one or more processed signals to back end processing circuitry 170." *Id.* at 12:42–45. Front end processing circuitry 150 "synchronize[s] the operation of an analog-to-digital converter and a demultiplexer with the light drive signal based on the timing control signals." *Id.* at 11:43–46.

Backend processing circuitry 170 "use[s] the timing control signals to coordinate its operation with front end processing circuitry 150." *Id.* at 11:46–49. Backend processing circuitry 170 includes processor 172 and memory 174, and "receive[s] and process[es] physiological signals received from front end processing circuitry 150" to "determine one or more physiological parameters." *Id.* at 14:56–57, 14:60–64. Backend processing circuitry 170 is "communicatively coupled [to] use[r] interface 180 and communication interface 190." *Id.* at 15:16–18. User interface 180 includes "user input 182, display 184, and speaker 186," and may include "a keyboard, a mouse, a touch screen, buttons, switches, [and] a microphone." *Id.* at 15:19–22. Communication interface 190 allows "monitor 104 to exchange information with external devices," and includes transmitters and receivers to allow wireless communications. *Id.* at 15:43–44, 15:48–57.

Lisogurski teaches the physiological monitoring system may modulate the light drive signal to have a "period the same as or closely related to the period of [a] cardiac cycle." *Id.* at 25:49–51. Thus, "[t]he system may vary parameters related to the light drive signal including drive current or light brightness, duty cycle, firing rate, . . . [and] other suitable parameters." *Id.* at 25:52–55. Lisogurski further teaches "the system may alter the cardiac cycle modulation technique based on the level of noise, ambient light, [and] other suitable reasons." *Id.* at 9:46–48. Thus, "[t]he system may increase the brightness of the light sources in response to [any] noise to improve the signal-to-noise ratio." *Id.* at 9:50–52. The system may also "change from a modulated light output to a constant light output in response to noise, patient motion, or ambient light." *Id.* at 9:57–60.

2. Carlson

Carlson discloses an "optical pulsoximetry [device] used for non-invasive measurement of pulsation and oxygen saturation in arterial human or animal blood." Ex. 1009 ¶ 2. The device measures the light "absorption of reduced (Hb)—and oxidized (HbO_2) h[e]moglobin at two optical wavelengths, where the relative absorption coefficients differ significantly." *Id.* ¶ 3.

Figure 2 of Carlson is reproduced below.

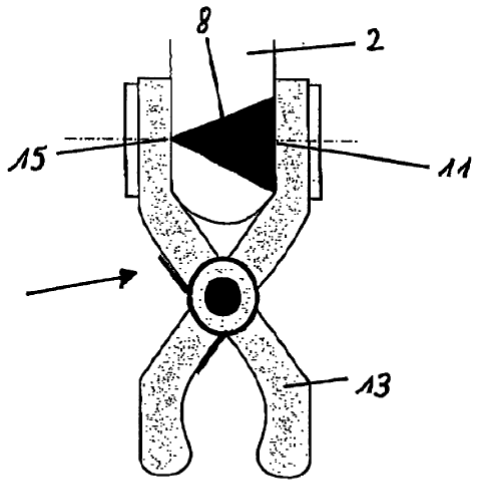

Figure 2

Figure 2 of Carlson is a schematic illustration of an ear clip sensor 1 of a pulsoximeter device. *Id.* ¶¶ 33, 49. Sensor 1 includes light source 15, which transmits light beam 8 through a patient's earlobe 2, and light detector 11 to detect the transmitted light. *Id.* ¶ 49. Light source 15 emits light at two wavelengths—660 nm and 890 nm—and can consist of two LEDs. *Id.* ¶ 50.

Carlson's pulsoximeter can be used to "survey the health condition of a person or an animal [that] is mobile." *Id.* ¶ 72. Carlson teaches that patient mobility can cause "standard pulsoximeter sensors [to] suffer from

signal instability and insufficient robustness versus environmental disturbances." *Id.* ¶ 4. Environmental disturbances can include ambient light, such as sunlight. *Id.* ¶ 68. For example, a person walking or driving down a tree-lined avenue can experience "relatively quick changing conditions between sunlight and shadow," such that a pulsoximeter sensor worn by the person will receive sunlight "at a certain frequency, which means that every time when passing a tree, sunlight is attenuated and between the trees sunlight is influencing the measurement of the pulsoximeter sensor." *Id.*

To address such problems, Carlson includes "optical and/or electronic means for increasing Signal-to-Noise ratio (S/N) . . . in rough (optical) environmental conditions." *Id.* ¶ 10. In particular, Carlson's LEDs emit light "not as a current or continuous light but as pulsed light." *Id.* ¶ 69. Carlson "temporarily modulate[s] the optical radiation of the LED at the carrier frequency f_0 in order to shift the power spectrum of the pulsoximeter signals into a higher frequency range where environmental optical radiation is unlikely." *Id.* ¶ 65. Temporary modulation frequency f_0 is "chosen in such a way that it is outside the frequency spectrum of sunlight and of ambient light." *Id.* ¶ 69. This allows easy discrimination of pulsoximeter signals from environmental signals, such as sunlight and ambient light, and "increas[es] significantly the Signal-to-Noise and Signal-to-Background ratio." *Id.*

Carlson further discloses that sensor 1 can be wirelessly connected to "a special unit worn by [a] person or patient," where "a signal is generated if [a] measured value is not within a predetermined range." *Id.* ¶¶ 77–78. The generated signal can be "transmitted to a respective person, to a medical

doctor, to a hospital, etc." *Id.* ¶ 78. The pulsoximeter can also include a "GPS device which at any time gives the location of the person using the pulsoximetric sensor monitoring configuration." *Id.*

3. Mannheimer

Mannheimer discloses a pulse oximetry device that "non-invasively measure[s] oxygen saturation of arterial blood in vivo." Ex. 1008, 1:10–13. Mannheimer's device performs a "pulsed oximetry measurement [that] isolates arterial saturation levels for particular ranges of tissue layers . . . by utilizing multiple spaced detectors and/or emitters." *Id.* at 2:1–6. Figure 1A of Mannheimer is reproduced below.

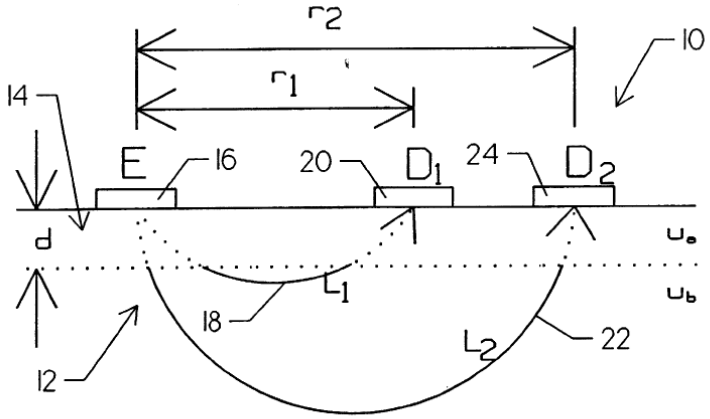

FIG. 1 A

Figure 1A of Mannheimer is a schematic diagram of a first embodiment of a pulse oximeter having one emitter 16 and two detectors 20/24. *Id.* at 2:40–42. Emitter 16 can be a single LED or multiple LEDs collocated to simulate a single point source. *Id.* at 3:13–18. Emitter 16 is separated from detector 20 by a first distance r_1, and is separated from detector 24 by a second distance r_2. *Id.* at 3:23–24. Light from emitter 16 is scattered by skin layer 14 and deeper skin layer 12, and reaches detectors 20/24 via respective paths

18/22. *Id.* at 3:18–20. Mannheimer calculates blood oxygen concentration in skin layer 12 from the intensity of two different wavelengths of light detected at detectors 20/24 at two different times. *Id.* at 3:35–4:63.

In addition to the embodiment shown in Figure 1A, Mannheimer discloses a second embodiment of a pulse oximeter in Figure 1B, reproduced below.

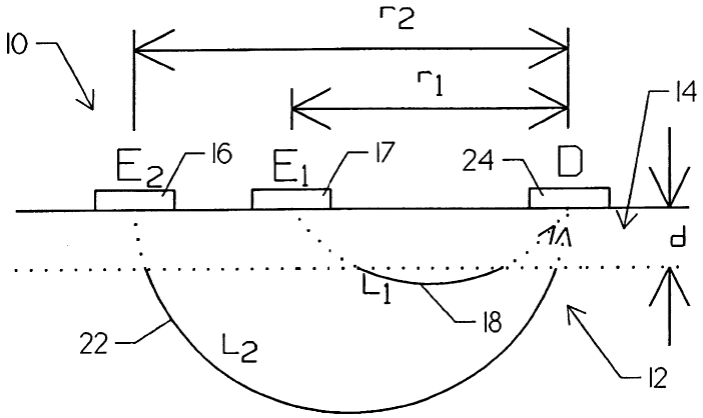

FIG. 1 B

Figure 1B of Mannheimer is a schematic diagram of a second embodiment of a pulse oximeter having two emitters 16/17 and one detector 24. *Id.* at 2:43–44, 3:37–39. As shown in Figure 1B, emitter 17 is separated from detector 24 by a first distance r_1, and emitter 16 is separated from detector 24 by a second distance r_2. Mannheimer discloses that "[t]hose of skill in the art will appreciate that the operation" of the second embodiment shown in Figure 1B "is similar to that described above" in reference to the first embodiment shown in Figure 1A. *Id.* at 5:58–62.

F. Patentability of claims 5, 7–10, 13, and 15–17 over Lisogurski and Carlson

Petitioner argues claims 5, 7–10, 13, and 15–17 are unpatentable as obvious over the combination of Lisogurski and Carlson. *See* Pet. 21–63.

1. Petitioner's proposed combination

Petitioner proposes combining Lisogurski's physiological monitoring system shown in Figures 1 and 3, in which sensor 102/312 wirelessly communicates with monitor 104/314, with Carlson's teachings regarding pulsing an LED at a frequency that increases signal-to-noise in a wireless pulsoximeter sensor. *See* Pet. 24–26, 32–34, 38–39, 41–44, 47–51.

Petitioner's proposed combination relocates some components of Lisogurski's monitor 104/314 to sensor 102/312, as illustrated in a series of Petitioner-modified versions of Lisogurski's Figure 1, which we combine into a single modified version shown below. *See id*. at 33, 47, 50.

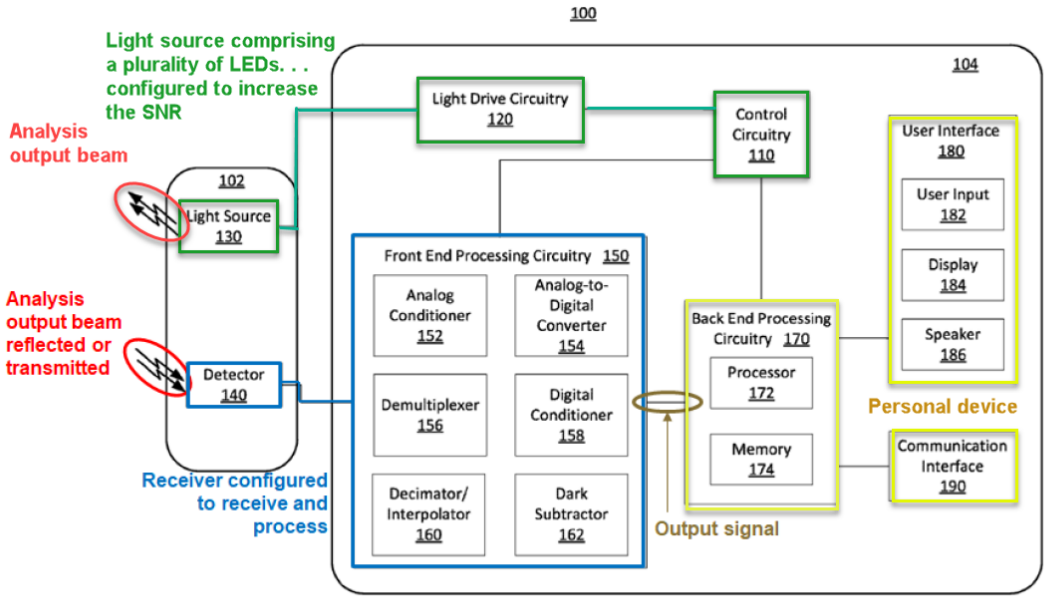

FIG. 1

Modified Figure 1 of Lisogurski illustrates Petitioner's proposed combination, which involves relocating control circuitry 110, light drive circuitry 120, and front end processing circuitry 150 of monitor 104 to sensor 102 as illustrated. *Id.*

Petitioner articulates sufficient reasoning with rational underpinning to demonstrate why a person of ordinary skill in the art would have modified Lisogurski's sensor 102/312 and monitor 104/314 in the manner proposed. *See id.* at 6–12, 32–34, 47–49 (citing/quoting Ex. 1003 ¶¶ 48–56, 98–103, 138, 142–146; Ex. 1005 ¶ 3; Ex. 1009 ¶ 4; Ex. 1011, 11:20–27, 11:38–41, 11:5054, 16:2–9, 17:32–35, 17:55–59, 18:16–31, 25:52–55; Ex. 1020, 3, 6–7, 12; Ex. 1021, 2–4; Ex. 1022, 1; Ex. 1023, 1, 2, 5, 6; Ex. 1024, 459, 460, 462; Ex. 1027, 9, 10, 15–31, 33, 35, 40–49; Ex. 1029, 221).

First, Lisogurski expressly suggests the modification by teaching embodiments in which "the functionality of some of the components may be combined in a single component" and embodiments in which "the functionality of some of the components of monitor 104 . . . may be divided over multiple components." Ex. 1011, 16:2–4, 16:7–9. Second, numerous industry trends motivate the modification. These include improving the capabilities of wearable sensors for use in sports and personal fitness applications and wirelessly connecting wearable sensors to networks to remotely monitor patient health. *See* Ex. 1005 ¶ 3; Ex. 1009 ¶ 4; Ex. 1020, 3; Ex. 1021, 2–4; Ex. 1022, 1; Ex. 1024, 462, Ex. 1027, 9, 10, 15, 33, 35, 40–49; Ex. 1029, 221; *see also KSR Int'l Co. v. Teleflex Inc.*, 550 U.S. 398, 418 (2007) ("When a work is available in one field of endeavor, design incentives and other market forces can prompt variations of it. . . . If a person of ordinary skill can implement a predictable variation, § 103 likely

bars its patentability."). Patent Owner does not dispute this. *See* PO Resp. 14–32.

Petitioner also articulates sufficient reasoning with rational underpinning to demonstrate why a person of ordinary skill in the art would have modified Lisogurski's light source to incorporate the teachings of Carlson. *See* Pet. 24–26, 37–39 (citing/quoting Ex. 1003 ¶¶ 81–85, 117–122; Ex. 1009 ¶¶ 2, 4, 10, 48, 52, 67–69; Ex. 1011, 1:4–6, 1:16–18, 1:67–2:3, 3:50–53, 4:15–20, 4:63–67, 5:55–61, 9:46–60, 17:51–58, 37:6–18).

Lisogurski and Carlson teach complementary and combinable methods for increasing signal-to-noise in a wearable pulsoximeter in the presence of ambient light or sunlight. For example, Lisogurski "may alter the cardiac cycle modulation technique based on the level of noise, ambient light, [or] other suitable reasons." Ex. 1011, 9:46–48. In particular, Lisogurski "may increase the brightness of the light sources in response to the noise to improve the signal-to-noise ratio. In some embodiments, the system may increase brightness throughout the cardiac cycle . . . ." *Id.* at 9:50–54 Carlson includes "electronic means for increasing the Signal-to-Noise . . . in rough (optical) environmental conditions, e.g., at changing light influences, such as sunlight, shadow, artificial light, etc." Ex. 1009 ¶ 10. In particular, Carlson pulses LEDs at a "frequency [that] is chosen in such a way that it is outside the frequency spectrum of sunlight and of ambient light. . . . [thereby] increasing significantly the Signal-to-Noise." *Id.* ¶ 69.

Thus, we agree with Petitioner that a person skilled in the art would have combined the teachings of Lisogurski and Carlson because the references teach "complementary designs and techniques in analogous systems," including "techniques for achieving the same objectives" of

increasing signal-to-noise in the presence of environmental noise such as ambient light or sunlight. Pet 25 (citing Ex. 1003 ¶¶ 81–84). Patent Owner does not dispute this. *See* PO Resp. 14–32.

2. Claims 5 and 13

a. A measurement system and wearable measurement device

Claim 13 recites a measurement system, and requires the system to include a wearable measurement device for measuring one or more physiological parameters. Ex. 1001 30:46–48. Petitioner demonstrates that Lisogurski's system 100/310, including sensor 102/312 for measuring blood oxygen saturation, meets this limitation. *See* Pet. 28 (citing Ex. 1011, 4:6–20, 17:55–59). Sensor 102/312 is a pulse oximeter that can be battery powered, wirelessly connected to monitor 104/314, and mounted on a user's fingertip, toe, earlobe, wrist, or thigh. Ex. 1011, 4:6–8, 4:15–20, 17:55–59. Patent Owner does not dispute this. *See* PO Resp. 13–42.

b. A light source including a plurality of LEDs

Claim 13 further requires the wearable measurement device to include a light source that includes a plurality of semiconductor sources that are light emitting diodes configured to generate an output optical beam with one or more optical wavelengths, including a near-infrared wavelength between 700 and 2500 nanometers. Ex. 1001 30:48–55. Petitioner demonstrates how Lisogurski's sensor 102/312 meets this limitation. *See* Pet. 29–30 (citing Ex. 1011, 4:42–45, 7:38–8:3, 10:48–52, 10:56–63, 17:37–45, 19:25–31, Figs. 1, 3; Ex. 1003 ¶¶ 92–94). Sensor 102/312 can contain multiple LEDs that emit and direct light toward a subject's tissue, including an LED that emits red light, and an LED that emits infrared light having a wavelength

between 800 and 1000 nm. Ex. 1011, 10:48–52, 10:56–63. Patent Owner does not dispute this. *See* PO Resp. 13–42.

c. The light source configured to increase signal-to-noise by increasing a light intensity

Claim 13 further requires the light source to be configured to increase signal-to-noise by increasing a light intensity of at least one of the plurality of semiconductor sources. Ex. 1001 30:56–58. Petitioner demonstrates how Lisogurski's LED-based light source 130/316 meets this limitation. *See* Pet. 30–31 (citing Ex. 1011, 1:19–21, 1:44–46, 1:67–2:3, 5:55–6:6, 9:46–52, 9:57–60, 10:48–49, 11:38–41, 11:50–54, 14:49–55, 35:5–9; Ex. 1003 ¶¶ 95–98). Lisogurski teaches "the intensity of light source 130 and the timing of when light source 130 is turned on and off" is controlled by a light drive signal that "increase[s] the brightness of the light sources in response to . . . noise to improve the signal-to-noise ratio." Ex. 1011, 9:50–52, 11:50–54. Patent Owner does not dispute this. *See* PO Resp. 13–42.

d. The light source configured to increase signal-to-noise by increasing a pulse rate

Claim 13 further requires the light source to be configured to increase signal-to-noise by increasing a pulse rate of at least one of the plurality of semiconductor sources. Ex. 1001 30:58–60 ("the pulse rate limitation"). Petitioner contends Lisogurski alone teaches this limitation, and further contends the combination of Lisogurski and Carlson teaches this limitation. *See* Pet. 35–39. Patent Owner disputes this. *See* PO Resp. 14–32. We address Petitioner's contentions below, and notwithstanding Patent Owner's arguments to the contrary, find Petitioner demonstrates how Lisogurski alone, or in combination with Carlson, teaches or suggests the pulse rate limitation.

(1) Lisogurski alone

Petitioner argues that Lisogurski alone teaches the pulse rate limitation by teaching (1) the LED firing rate and brightness can be varied by the light drive signal, (2) the detector sampling rate is correlated to the LED firing rate and can be varied in the same way as the LED brightness, and (3) the LED brightness can be increased to increase signal-to-noise. *See* Pet. 35–36 (citing Ex. 1011, 2:1–2, 8:29–35, 9:46–52, 11:43–46, 11:52–55, 25:49–55, 33:47–49, 33:56–58, 35:7–9; 35:27–31, 37:6–22; Ex. 1003 ¶¶ 112–116). That is, Petitioner argues that Lisogurski teaches the pulse rate limitation because the LED firing rate and detector sampling rate are correlated and "increasing the sampling rate 'may result in more accurate and reliable physiological information.'" *Id.* at 36 (quoting Ex. 1011, 33:56–58; citing Ex. 1003 ¶ 116).

In our Institution Decision, we made a preliminary finding that Petitioner had not sufficiently demonstrated how Lisogurski teaches the pulse rate limitation because Lisogurski varies the LED brightness, LED pulse rate, and detector sampling rate to be synchronous with a cardiac cycle rather than to improve signal-to-noise. Dec. Inst. 30–31. For example, Lisogurski teaches:

> [T]he system may generate *a light drive signal that varies with a period the same as or closely related to the period of the cardiac cycle, thus generating a cardiac cycle modulation*. The system may vary parameters related to the light drive signal including drive current or light brightness, duty cycle, firing rate, modulation parameters, other suitable parameters, or any combination thereof.

Ex. 1011, 25:49–55 (emphases added). Lisogurski further teaches:

> It will also be understood that sampling rate is one of the components that may be *modulated in cardiac cycle modulation* as described above. It will also be understood that the earlier described embodiments relating to varying light output may also apply to sampling rate.

Id. at 35:5–9 (emphasis added).

Patent Owner at first agrees with this preliminary finding. *See* PO Resp. 16 ("In its Institution Decision, the Board correctly found that Lisogurski fails to disclose increasing SNR by increasing a pulse rate as claimed."). However, Patent Owner then makes the following statement:

> *Lisogurski teaches three different techniques for improving SNR*: (i) by increasing the "brightness" of the light source, (ii) by operating in a "high power mode without cardiac cycle modulation," and (iii) by *modulating the light signal to correlate with "physiological pulses" such as a "cardiac pulse," e.g.*, "diastole period cardiac modulation" or "systole period cardiac cycle modulation."

Id. at 15 (citing Ex. 1011, 25:66–26:14; 42:45–58) (emphases added) (internal citations omitted). In other words, Patent Owner expressly recognizes that Lisogurski improves signal-to-noise by modulating the light signal to correlate with, for example, a cardiac pulse. *Id*.

Petitioner replies that "when a person's heart rate increases" Lisogurski "increase[s] the sampling rate and emitter firing rate to become or remain synchronous with [the] cardiac cycle." Pet. Reply 10 (citing Ex. 1011, 25:49–55; 31:11–24; 31:39–55). Petitioner argues this allows Lisogurski to obtain "more accurate and reliable physiological information," which a person skilled in the art would have understood occurs "because [the] SNR is higher." *Id.* at 11 (quoting Ex. 1001, 33:46–52; citing Ex. 1003 ¶ 116). Petitioner further argues Patent Owner has admitted this because

"Omni admitted that cardiac cycle modulation is a technique for increasing SNR." *Id.* (quoting PO Resp. 15).

We are persuaded by Petitioner's argument, which is supported not only by intrinsic evidence and argument advanced by Patent Owner, but also testimony provided by Patent Owner's own witness. Lisogurski teaches correlating LED pulse rate and cardiac cycle rate, for example, by increasing LED pulse rate to match an increased cardiac cycle rate. *See* Ex. 1011, 25:46-55. Patent Owner acknowledges that Lisogurski teaches signal-to-noise can be improved by correlating the LED drive signal with a cardiac cycle signal. *See* PO Resp. 15 (citing Ex. 1011, 25:66–26:14, 42:45–58). For example, Lisogurski teaches that noise contributes "variations of 2.6%, 1.9%, and 3.8% to the computed pulse amplitudes of PPG[5] signal 2602, systole period modulated PPG signal 2604, and diastole period modulated PPG signal 2606." Ex. 1011, 42:50–54. Thus, increasing the LED firing rate to become synchronous with the systole period of an increased cardiac cycle rate can result in a physiological measurement having less noise (1.9%), and, therefore, an increased signal-to-noise ratio. Lisogurski also teaches that modulating an LED drive signal to match "particular segments of a respiratory cycle *may* provide an increased signal-to-noise ratio." Ex. 1011, 25:66–26:14 (emphasis added). Dr. MacFarlane, Patent Owner's expert, similarly testified that "increasing the [LED pulse] frequency *can*

[5] Lisogurski identifies a PPG or photoplethysmograph signal as "[a] signal representing light intensity versus time or a mathematical manipulation of this signal." Ex. 1001, 4:26–31. For example, a PPG signal can be a light absorption signal where "the amount of light absorbed may then be used to calculate any of a number of physiological parameters." *Id.* at 4:31–38.

sometimes increase the signal-to-noise ratio." Ex. 1060, 82:5–15 (emphasis added).

An LED is "configured" to increase signal-to-noise by increasing LED pulse rate when it is "capable" of doing so, even if it only does so some of the time. *See Hewlett-Packard Co. v. Mustek Systems, Inc.*, 340 F.3d 1314, 1326 (Fed. Cir. 2003) ("a prior art product that sometimes, but not always, embodies a claimed method nonetheless teaches that aspect of the invention"). This is so because whether signal-to-noise increases with increasing LED pulse rate depends on an external factor—the noise spectrum in the environment within which the device operates. But the claim is directed to the device itself, regardless of the environment within which it operates. Thus, a light source is "configured" to increase signal-to-noise by increasing LED pulse rate when it is "capable" of doing so, i.e., when the increased pulse rate allows the device to operate in a frequency range having less environmental noise. This is true, even if the device does not always do so. *See ParkerVision, Inc. v. Qualcomm Inc.*, 903 F.3d 1354, 1361 (Fed. Cir. 2018) ("[A] prior art reference may anticipate or render obvious an apparatus claim . . . if the reference discloses an apparatus that is reasonably capable of operating so as to meet the claim limitations, even if it does not meet the claim limitations in all modes of operation.").

Accordingly, for the reasons discussed above, Petitioner has demonstrated how Lisogurski alone teaches the pulse rate limitation.

(2) Lisogurski and Carlson

Petitioner also argues that, to the extent Lisogurski alone does not teach the pulse rate limitation, the combination of Lisogurski and Carlson does. *See* Pet. 37–39. Specifically, Petitioner argues that because

Lisogurski "clearly identifies the importance of increasing signal-to-noise ratio" a person skilled in the art "would have been motivated to consider prior art teaching additional ways of improving signal-to-noise ratio." *Id.* at 37 (citing Ex. 1011, 9:50–52; Ex. 1003 ¶¶ 83–85, 120–121). Petitioner argues Carlson does so by pulsing an oximeter's LEDs at a frequency "outside the frequency spectrum of sunlight and of ambient light" in order to "reduce[] the effects of ambient light including sunlight." *Id.* at 37–38 (citing Ex. 1009 ¶¶ 67–69; Ex. 1003 ¶¶ 118–119).

Petitioner argues it would have been obvious to modify Lisogurski based on the teachings of Carlson because both references recognize the problem of ambient light noise "and the need to offset its negative impact on the signal-to-noise ratio." *Id.* at 38 (citing Ex. 1009 ¶¶ 67–69; Ex. 1011 9:46–60; Ex. 1003 ¶¶ 118–121). Petitioner argues Lisogurski teaches adjusting the LED firing rate "in response to changes in environmental conditions, such as changes in background noise or ambient light." *Id.* (citing Ex. 1011, 1:67–2:3, 5:55–61, 9:46–60, 37:6–18; Ex. 1003 ¶¶ 120–122). Petitioner further argues Carlson teaches "increasing the modulation frequency of the pulsed LEDs improves the signal-to-noise ratio" by teaching the LED "pulse frequency ('*pulse rate*') is 'chosen in such a way that it is outside the frequency spectrum of sunlight and ambient light' and it could be '1000 Hz' or 'can be chosen at any other frequency, as e.g. 2000 Hz or even higher.'" *Id.* at 37–39 (quoting Ex. 1009 ¶ 69; citing Ex. 1003 ¶¶ 119–121). Thus, Petitioner argues, "a skilled person would have found it obvious to configure Lisogurski to increase the firing rate (frequency) of LEDs as taught by Carlson, given that Carlson teaches that increasing the

modulation frequency of the pulsed LEDs improves the signal-to-noise." *Id.* at 39 (citing Ex. 1003 ¶ 120–121).

In our Institution Decision, we made a preliminary finding that Petitioner was reasonably likely to show how the combination of Lisogurski and Carlson teaches the pulse rate limitation because:

> Together, the references teach that a pulsoximeter can detect a change in background noise and modify the LED firing rate based on the detected change (as taught by Lisogurski), and can modify the frequency of the LED firing rate to be greater than the frequency of the background noise (as taught by Carlson).

Dec. Inst. 36 (citing Ex. 1011, 1:67–2:3, 37:6–9; Ex. 1009 ¶¶ 65, 69). Patent Owner argues this is "an obviousness argument the Petition did not assert." PO Resp. 31. Petitioner disagrees, arguing "the Board did not advance a new argument in its Institution Decision." Pet. Reply 24–25.

We agree with Petitioner. The *Petition* states: Lisogurski "adjust[s] various parameters of light emitted by the LEDs to ensure an adequate signal-to-noise ratio," including "drive current or light brightness, duty cycle, [and] ***firing rate***." Pet. 35 (citing Ex. 1011, 25:49–55, 27:44–52, 37:6–22) (internal citations omitted). We agree. For example, Lisogurski measures a physiological parameter in cardiac cycle modulation mode using "a light drive signal that varies with a period the same as . . . the period of the cardiac cycle," i.e., a 1 second period corresponding to a firing rate of 1 Hz. Ex. 1011, 5:48–54, 25:46–52. Lisogurski "detect[s] a change in background noise [or] . . . ambient light" and "perform[s] a physiological measurement in a second mode." *Id.* at 37:6–9, 37:14–15. The second mode, for example, can (a) "stop cardiac cycle modulation," (b) "increase emitter intensity" during cardiac cycle modulation, (c) "lengthen the 'on'

periods" (i.e., duty cycle) of cardiac cycle modulation, or (d) "alter the cardiac cycle modulation" by changing the LED firing rate as shown in Figure 8B. *Id.* at 37:15–22. That is, the second mode can differ from cardiac cycle modulation by changing any of the light drive signal parameters, i.e., the "drive current or light brightness, duty cycle, firing rate . . . or any combination thereof." *Id.* at 27:44–49. Thus, *in the Petition*, Petitioner cites sufficient evidence to persuasively demonstrate how Lisogurski teaches (1) modulating an LED by pulsing it at a 1 Hz rate that matches a cardiac cycle, (2) detecting ambient light noise, and (3) changing the LED modulation to operate in a second mode by changing one or more of the LED brightness, duty cycle (on time per cycle), or firing rate.

The *Petition* also states: Carlson teaches "pulsing the LEDs reduces the effects of ambient light including sunlight" when "the pulse frequency ('*pulse rate'*) is 'chosen in such a way that it is outside the frequency spectrum of sunlight and of ambient light." Pet. 37–38 (quoting Ex. 1009 ¶ 69). We agree. For example, Carlson teaches various means to improve a pulsoximeter's signal-to-noise. Ex. 1009 ¶¶ 62–69. These include "us[ing] a light source modulation to temporarily modulate the optical radiation of the LED" at a frequency that "is chosen in such a way that it is outside the frequency spectrum of sunlight and of ambient light . . . in the range of above approximately 1000 Hz." *Id.* ¶¶ 64, 69.

Finally, the *Petition* also states: Lisogurski "can readily be modified to incorporate the Carlson technique, given that Lisogurski teaches that the firing rate of the LEDs can be adjusted in response to changes in environmental conditions, such as changes in background noise or ambient light." Pet. 38. We agree. As discussed above, Lisogurski teaches (1)

taking a physiological measurement in cardiac cycle modulation mode using LEDs modulated at a 1Hz pulse rate, (2) exiting the cardiac cycle modulation mode upon detecting ambient light noise, and (3) taking the measurement in a second mode that varies any combination of LED brightness, duty cycle, or firing rate, and Carlson teaches (4) taking a physiological measurement using an LED modulated at a 1000 Hz pulse rate to reduce ambient light noise. *See* Pet. 35, 37 (citing Ex. 1011, 25:49–55, 27:44–52, 37:6–22; Ex. 1009 ¶ 69) (internal citations omitted). Thus, Petitioner cites sufficient evidence *in the Petition* to demonstrate how the combination of Lisogurski and Carlson teaches the pulse rate limitation.

Patent Owner next argues that the combination of Lisogurski and Carlson does not teach the pulse rate limitation because "neither reference teaches nor suggests a ***device*** 'configured to' ***increase*** a pulse rate to increase SNR" PO Resp. 28. That is, Patent Owner argues the combination fails to teach the pulse rate limitation because both Lisogurski[6] and Carlson[7]

---

[6] As discussed in § II.F.2.d(1), *supra*, we find Lisogurski teaches the pulse rate limitation, e.g., by increasing the LED pulse rate to match an increased cardiac cycle rate.

[7] Patent Owner argues Carlson fails to teach the pulse rate limitation because Carlson discloses temporarily modulating a continuous light source to operate "at a chosen single, fixed pulse rate" that is not increased. PO Resp. 17. The concurrence disagrees. We need not resolve that issue here, however, because we find Lisogurski teaches switching the LED pulse rate from a cardiac cycle mode (1 Hz pulse rate) to a second mode that reduces ambient light noise, and Carlson teaches pulsing the LED at 1000 Hz to reduce ambient light noise. That is, the combination teaches increasing signal-to-noise by increasing the LED pulse rate from 1 Hz to 1000 Hz.

fail to teach it. *Id.* at 25–26.

We are not persuaded by this argument because it fails to consider the combined teachings of Carlson and Lisogurski. "Non-obviousness cannot be established by attacking references individually where the rejection is based upon the teachings of a combination of references." *In re Merck & Co.*, *Inc*., 800 F.2d 1091, 1097 (Fed. Cir. 1986). Rather, the test for obviousness is "what the combined teachings of the references would have suggested to those of ordinary skill in the art." *In re Keller 642 F.2d 413, 425* (Fed. Cir. 1981). As discussed above, the combined teachings of Lisogurski and Carlson are to (1) pulse an LED at 1 Hz in a cardiac cycle modulation mode, (2) detect ambient light noise, and (3) switch to a second mode to reduce the ambient light noise, such as a mode that pulses the LED at 1000 Hz. Thus, the proposed combination of Lisogurski and Carlson is the simple "substitution of one element for another known in the field" to achieve a predictable result. *KSR Int'l Co. v. Teleflex Inc.,* 550 U.S. 398, 416 (2007).

Accordingly, for the reasons discussed above, we find Petitioner has demonstrated that the combination of Lisogurski and Carlson teaches a light source configured to increase signal-to-noise by increasing LED pulse rate.

e. A plurality of lenses

Claim 13 further requires the wearable measurement device to include a plurality of lenses configured to receive a portion of the output optical beam and to deliver an analysis output beam to a sample. Ex. 1001 30:60–63. Petitioner demonstrates how Lisogurski's wireless sensor 102/312, when combined with the knowledge of a person of ordinary skill in the art or the teachings of Carlson, meets this limitation. See Pet. 39–43.

First, Petitioner demonstrates how a person skilled in the art would have known that LEDs are often covered by lensing encapsulants, and would have selected such LEDs for wireless sensor 102/312 in order to "direct more of the light produced by the LED outward toward the tissue," thereby improving the efficiency of wireless, battery-powered, sensor 102/312. *Id.* at 39–40 (citing Ex. 1003 ¶¶ 124–128; Ex. 1035, 97–98, 191–199). Second, Petitioner demonstrates that a person skilled in the art, knowing "a lens is a 'basic building block' of an optical sensor," would have included lenses in Lisogurski's wireless sensor 102/312. *Id.* at 41 (citing Ex. 1003 ¶ 129; Ex. 1019, 765). Third, Petitioner demonstrates that a person skilled in the art would have included lenses in Lisogurski's wireless sensor 102/312 because Carlson teaches the advantages of doing so. *Id.* at 41–43 (citing Ex. 1009 ¶¶ 13, 14, 24, 62, Fig. 4; Ex. 1003 ¶¶ 130–133). Figure 4 of Carlson is reproduced below.

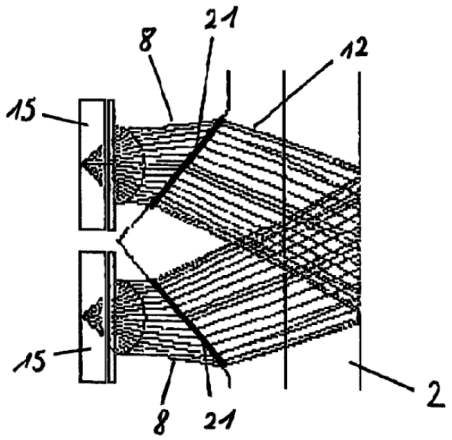

Figure 4

Figure 4 of Carlson schematically illustrates "two light emitting sources for an oximetric sensor, including beam shaping optics." Ex. 1009 ¶ 35. The beam shaping optics include "two lenses 21 that receive light beams 8

emitted by LEDs 15 . . . and deliver light bundles or beams 12 to sample 2." Pet. 42 (citing Ex. 1009 ¶¶ 54, 62). Carlson teaches lenses 21 "increase the optical signal power without increasing the actual power used by the system," thereby "increasing the Signal/Noise . . . ratio." *Id.* at 43 (citing Ex. 1009 ¶¶ 10, 14). Lisogurski teaches the importance of both reducing power consumption and increasing signal-to-noise ratio. *Id.* (citing Ex. 1003 ¶¶ 84, 118, 133–134; Ex. 1011, 14:40–55, 37:6–20). Therefore, a person skilled in the art would have incorporated Carlson's lenses 21 into Lisogurski's wireless sensor 102/312 to increase its optical signal power and signal-to-noise ratio without increasing its actual power. Patent Owner does not dispute this. See PO Resp. 14–32.

f. A receiver

Claim 13 further requires the wearable measurement device to include a receiver configured to receive and process at least a portion of the analysis output beam reflected or transmitted from the sample and to generate an output signal, and further configured to be synchronized to pulses of the light source. Ex. 1001, 30:64–31:3. Petitioner identifies Lisogurski's detector 140/318 and front end processing circuitry 150 in monitor 104 as the receiver. *See* Pet. 45 ("The detector described in Lisogurski is connected to front end processing circuitry (together a '*receiver configured to receive and process*')"). Petitioner provides a modified version of Figure 1 of Lisogurski, reproduced below, to illustrate the components of such a receiver.

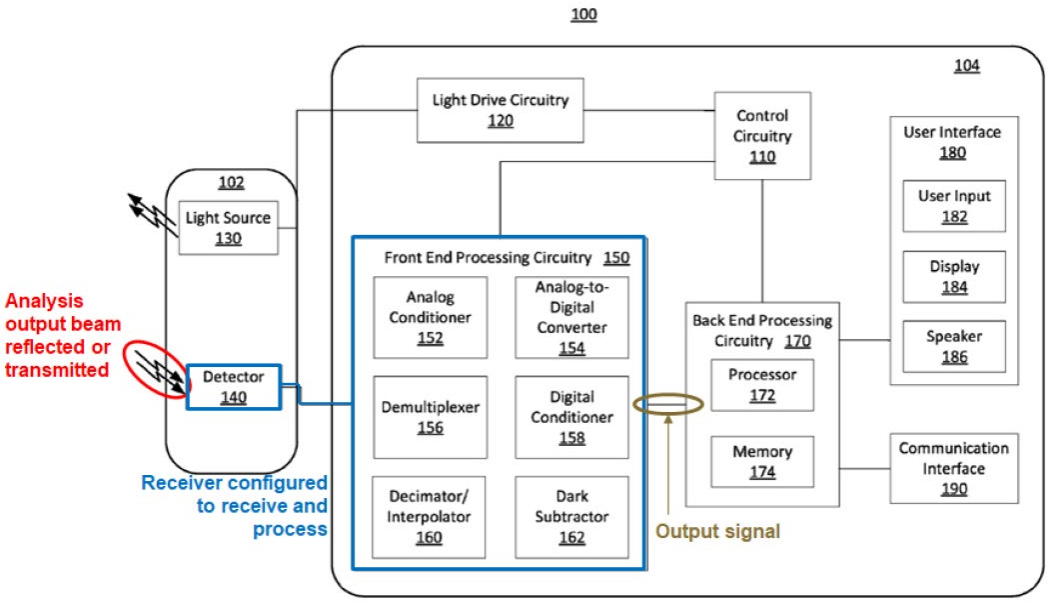

FIG. 1

The Figure is a Petitioner-modified version of Figure 1 of Lisogurski showing Petitioner's proposed modification of sensor 102 to include front end processing circuitry 150 from monitor 104. For the reasons discussed in § II.F.1, *supra*, Petitioner demonstrates why a person skilled in the art would have modified Lisogurski's wireless sensor 102/312 to include front end processing circuitry 150. These include Lisogurski's express suggestion, the industry trend to make wireless sensors for remote healthcare and personal fitness tracking, and the need to convert "the analog signal output from the detector . . . to digital form for wireless transmission. . . . in the sensor where the signal is captured." *Id.* at 48–49 (quoting Ex. 1011, 16:2–9; citing Ex. 1003 ¶¶ 144–146). Patent Owner does not dispute this. *See* PO Resp. 8–32.

Petitioner demonstrates how Lisogurski's receiver (i.e., detector 140/318 and front end processing circuitry 150) meets the "receiver" limitations. See Pet. 44–45 (citing/quoting Ex. 1011, 11:9–10, 11:14–17,

11:20–27, 11:41–46, 12:42–45, 17:40–42, Figs. 1, 3; Ex. 1003 ¶ 139). The receiver receives and processes the output beam because it includes detector 140/318, which "detect[s] the light that is reflected by or has traveled through the subject's tissue" and "convert[s] the intensity of the received light into an electrical signal." Ex. 1011, 11:14–17, 17:39–42, Figs. 1, 3. The receiver generates an output signal because front end processing circuitry 150 "receive[s] a detection signal from detector 140 and provide[s] one or more processed signals to back end processing circuitry 170." *Id.* at 11:20–27, 12:42–45. The receiver is synchronized to the light source's pulses of light because the "front end processing circuitry may use the timing control signals to operate synchronously with light drive circuitry 120," i.e., the circuitry that drives Lisogurski's LED-based light source. *Id.* at 11:41–46, 11:50–54. Patent Owner does not dispute this. *See* PO Resp. 14–32.

g. A personal device

Claim 13 further requires a personal device that includes a wireless receiver and transmitter, a display, a microphone, a speaker, one or more buttons or knobs, a microprocessor and a touch screen. Ex. 1001 31:3–7. Petitioner identifies Lisogurski's monitor 104/314, modified as described above to include only backend processing circuitry 170, user interface 180, and communication interface 190, as the personal device. *See* Pet. 49–53. Petitioner provides a modified version of Figure 1 of Lisogurski, reproduced below, to illustrate the components of such a personal device.

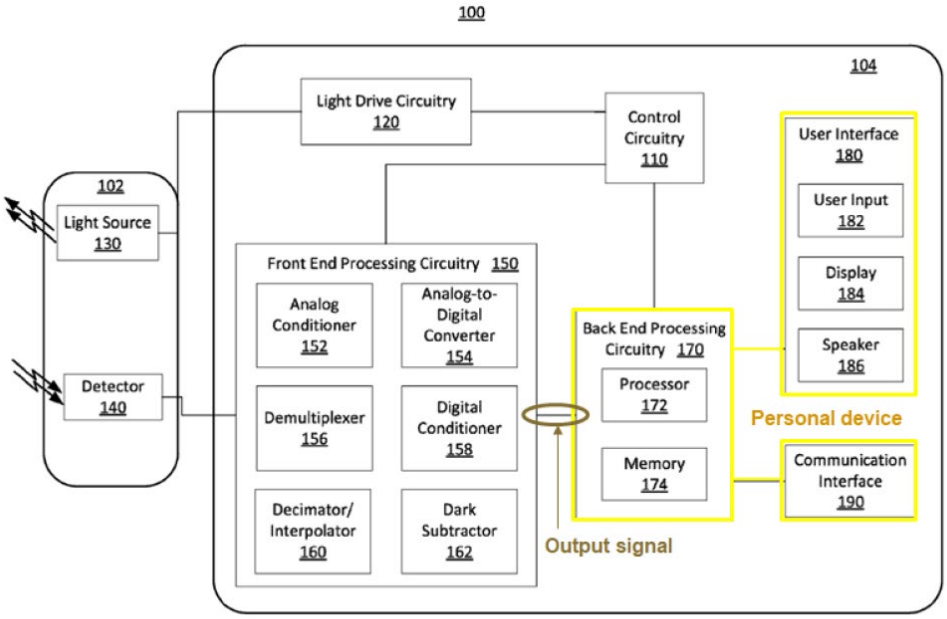

FIG. 1

The Figure is a Petitioner-modified version of Figure 1 of Lisogurski showing Petitioner's proposed modification of monitor 104 to include only backend processing circuitry 170, user interface 180, and communication interface 190. Petitioner demonstrates why a person skilled in the art would have modified Lisogurski's monitor 104 in the manner proposed, including Lisogurski's express suggestion and the industry trend to make wireless sensors for personal fitness tracking that transmit monitored physiological parameters to a personal device. See § II.F.1, *supra*.

Petitioner demonstrates how backend processing circuitry 170 includes microprocessor 172, user interface 180 includes a display, a microphone, a speaker, buttons, and a touch screen, and communication interface 190 includes wireless receivers and transmitters for wireless communications. *Id.* at 51 (citing Ex. 1011, 15:19–23, 15:49–56, Fig. 1). Patent Owner does not dispute this. *See* PO Resp. 14–32.

Claim 13 further requires the personal device to be configured to receive and process at least a portion of the output signal, to store and display the processed output signal, and to transmit at least a portion of the processed output signal over a wireless transmission link. Ex. 1001 31:7–12. Petitioner demonstrates how Lisogurski's monitor 104/314 (i.e., backend processing circuitry 170, user interface 180, and communication interface 190) meets these personal device limitations. See Pet. 50–53 (citing/quoting Ex. 1011, 14:60–15:16, 15:30–35, 15:43-48, 15:55-57, 18:11-15, 18:49-65, 26:55-60, 27:31–36, Fig. 1; Ex.1003, ¶¶150–153).

Monitor 104/314 receives and processes the output signal from the receiver (i.e., detector 140/318 and front end processing circuitry 150) because processor 172 in back end processing circuitry 170 "receive[s] and process[es] physiological signals [i.e., the output signal] received from front end processing circuitry 150" and "determine[s] one or more physiological parameters based on the received physiological signals." Ex. 1011, 14:56–64, Fig. 1. Monitor 104/314 displays the processed output signal (i.e., a determined physiological parameter) because it includes display 184/320, which can "display, for example, an estimate of a subject's blood oxygen saturation generated by monitor 104." *Id.* at 15:30–35, Figs. 1, 3. Monitor 104/314 stores the processed output signal because it includes memory 174, which can store "historical information [measured in] previous cardiac cycles." *Id.* at 14:64–15:16, 27:31–36, Fig. 1. Finally, monitor 104/314 transmits the processed output signal over a wireless link because communications interface 190 can use a wireless communications protocol to transmit the signal to MPPM 326 for display on remote display 328. *Id.*

at 15:43–57, 18:11–15, 18:49–65, 26:55–60, Figs. 1, 3. Patent Owner does not dispute this. *See* PO Resp. 14–32.

h. A remote device

Claim 13 further requires a remote device configured to receive over the wireless transmission link an output status including at least a portion of the processed output signal, to process the received output status to generate and store processed data, and to store a history of at least a portion of the received output status over a specified period of time. Ex. 1001, 31:13–20.

Petitioner demonstrates how Lisogurski's MPPM 326 meets these limitations. *See* Pet. 53–55 (citing Ex. 1011, 15:43–48, 18:49–53, 18:58–62, 20:8–13, 26:51–60; Ex. 1003 ¶¶ 154–163). MPPM 326 can be wirelessly coupled to monitor 104/314 and receive an output status that includes the processed output signal (i.e., a physiological parameter) over a wireless link. Ex. 1011, 15:43–48, 18:49–56, 18:58–62, Fig. 3. MPPM 326 can process the received output status to generate and store processed data, e.g., because monitor 104/314 can "publish" the data. *Id.* at 26:51–60. According to the unrebutted testimony of Dr. Anthony, MPPM 326 "would need to process the data and then store it" in order to "publish" it. Ex. 1003 ¶ 155. MPPM 326 can also store a history of the output status over a period of time because it can perform statistical analysis on a history of physiological parameter measurements, e.g., to determine the average value and standard deviation of the physiological parameter measurements. Ex. 1011, 20:8–13. Patent Owner does not dispute this. *See* PO Resp. 14–32.

For the reasons discussed above, we find Petitioner has demonstrated by a preponderance of evidence that the combination of Lisogurski and Carlson teaches all the limitations of claim 13 and that claim 13 is

unpatentable over the combination. As discussed in § II.B, *supra*, claim 5 is broader than, but substantially similar in scope to, claim 13. Petitioner's analysis of claim 5, therefore, relies on its analysis of claim 13. *See* Pet. 55–57. Accordingly, we find Petitioner has demonstrated by a preponderance of evidence that claim 5 is unpatentable over the combination of Lisogurski and Carlson for the same reasons discussed above for claim 13.

3. Claims 7 and 15

Claim 15 depends from claim 13, and further requires the remote device to be configured to transmit at least a portion of the processed data to one or more other locations selected from the group consisting of the personal device, a doctor, a healthcare provider, a cloud-based server and one or more designated recipients, and to be capable of transmitting information related to a time and a position associated with the at least a portion of the processed data. Ex. 1001, 32:1–9. Claim 7 depends from claim 5, and adds the same limitation to claim 5. *Compare id*. at 30:15–23, *with id*. at 32:1–9.

Petitioner demonstrates how the combination of Lisogurski and Carlson teaches these limitations. *See* Pet. 58–59 (citing Ex. 1011, 15:43–57, 18:11–15, 18:48–67, 20:53–60; Ex. 1009 ¶ 78; Ex. 1003 ¶¶ 176–178). As discussed in § II.F.2, *supra*, Lisogurski's MPPM 326 is a remote device that is wirelessly coupled to and receives an output signal from monitor 104/314 (i.e., a personal device) and that can be "coupled to a network to enable the sharing of information with servers or other workstations," (i.e., a cloud-based server). Ex. 1011, 15:43–48, 18:49–65, Fig. 3. Carlson teaches the server can be in a hospital's network or a doctor's network. Ex. 1009 ¶ 78. Carlson further teaches a wearable sensor, such as Lisogurski's

wearable sensor 102/312, can include a GPS receiver to enable it to communicate a patient's location to a monitoring hospital or doctor when the patient's physiological data in not within a predetermined range. *Id.*

Petitioner also provides sufficient reasoning, with a rational underpinning, to combine the teachings of Lisogurski and Carlson in the proposed manner. Specifically, Petitioner argues that a person skilled in the art would have found it obvious "to modify Lisogurski in the manner suggested by Carlson in order to use GPS data to track the location of a person wearing a sensor" to be able to "identify where the person was in case of emergency to allow any medical personnel at the central location to find the person to provide assistance." Pet. 59 (citing Ex. 1003 ¶ 178). Patent Owner does not dispute this. *See* PO Resp. 14–32.

For the reasons discussed above, we find Petitioner has demonstrated by a preponderance of evidence that claims 7 and 15 are unpatentable over the combination of Lisogurski and Carlson.

4. Claims 8 and 16

Claim 16 depends from claim 13, and further requires the receiver to be located a first distance from and to receive a first signal from a first one of the plurality of light emitting diodes, and to be located a different, second distance from and to receive a second signal from a second one of the plurality of light emitting diodes. Ex. 1001, 32:10–15. Claim 8 depends from claim 5, and adds the same limitations to claim 5. *Compare id*. at 30:24–30, *with id*. at 32:10–15.

Petitioner demonstrates how Lisogurski teaches these limitations. *See* Pet. 60–62 (citing Ex. 1011, 7:38–8:3, 12:29–33, 17:39–45, Figs. 2A, 2B; Ex. 1009 ¶ 78; Ex. 1003 ¶¶ 181–183). Lisogurski teaches "[s]ensor unit 312

may include one or more light source[s] 316 for emitting light at one or more wavelengths" and "[o]ne or more detector[s] 318." Ex. 1011, 17:37–42. Light sources 316 and detectors 318 may be arranged in "[a]ny suitable configuration," and "may be spaced apart." *Id.* at 17:42–45. Light sources 316 can include "a high efficiency infrared (IR) LED" and one or more "lower efficiency red LEDs." *Id.* at 7:58–61. The red and IR LEDs can be flashed on and off, during separate "Red light LED 'on' period[s] 202" and "IR light 'on' period[s] 204." *Id.* at 12:23–33, Figs. 2A, 2B. During these periods, detector 318 "detect[s] the light that is reflected by or has traveled through the subject's tissue," i.e., detector 318 detects a first signal from a first LED (red light from red LED) and a second signal from a second LED (IR light from IR LED). *Id.* at 12:29–33, 17:39–42, Figs. 2A, 2B.

Petitioner argues, and we agree, that because "[t]here are just two options for how two LEDs can be spaced in relation to a detector: either they are each the same distance from the detector or they are different distances from it," a person of ordinary skill in the art reading Lisogurski's disclosure that the sensors can be spaced apart would have "immediately envisioned both options." Pet. 61 (citing Ex. 1003 ¶ 181, *Kennametal, Inc. v. Ingersoll Cutting Tool Co.*, 780 F.3d 1376, 1381 (Fed. Cir. 2015)). Petitioner further argues, and we agree, that because "[t]here are just two choices for how to space the LEDs from the detector . . . the selection of one of those two ways is a simple design choice." *Id.*, n.8. Patent Owner does not dispute this. *See* PO Resp. 14–32.

For the reasons discussed above, we find Petitioner has demonstrated by a preponderance of evidence that claims 8 and 16 are unpatentable over the combination of Lisogurski and Carlson.

5. Claims 9 and 17

Claim 17 depends from claim 16, and further requires the receiver's output signal to be generated in part by comparing the first and second signals. Ex. 1001, 32:16–17. Claim 9 depends from claim 8, and adds the same limitations to claim 8. *Compare id*. at 30:31–32, *with id*. at 32:16–17.

Petitioner demonstrates how Lisogurski teaches this limitation. *See* Pet. 63 (citing Ex. 1011, 4:45–56; Ex. 1019, 769–770; Ex. 1003 ¶ 183). As discussed in § II.F.4, *supra*, Lisogurski teaches separately detecting red light (first signal) and IR light (second signal) at different points in a timing cycle, and further teaches "comparing the intensities of two wavelengths at different points in the pulse cycle . . . to estimate the blood oxygen saturation of hemoglobin in arterial blood." Ex.1011, 4:45-51. Specifically, Lisogurski teaches "determin[ing] blood oxygen saturation using two wavelengths of light and a ratio-of-ratios calculation." *Id.* at 4:52–56.

For the reasons discussed above, we find Petitioner has demonstrated by a preponderance of evidence that claims 9 and 17 are unpatentable over the combination of Lisogurski and Carlson.

6. Claim 10

Claim 10 depends from claim 5, and further requires the output signal to include one or more physiological parameters, and the remote device to be capable of storing a history of at least a portion of the one or more physiological parameters over a specified period of time. Ex. 1001, 30:33–57. As discussed in § II.B, *supra*, independent claim 5 is broader than independent claim 13 because it does not require the measurement device to output one or more physiological parameters and does not require the remote device to be capable of storing a history of the one or more physiological

parameters over a specified period of time. *Compare id.* at 29:43–30:10, *with id*. at 30:46–31:20. Claim 10 adds these limitations to claim 5, giving claim 10 the same scope as claim 13. *Id.* at 30:33–37.

Petitioner relies on its analysis of claim 13 to teach the limitations of claim 10. *See* Pet. 63. For the reasons explained in § II.F.2, *supra*, Petitioner demonstrates by a preponderance of evidence that the combination of Lisogurski and Carlson teaches all of the limitations of claim 10, and that claim 10 is unpatentable over the combination of Lisogurski and Carlson.

G. Patentability of claims 8, 9, 16, and 17 over Lisogurski, Carlson, and Mannheimer

Petitioner argues claims 8, 9, 16, and 17 are unpatentable as obvious over the combination of Lisogurski, Carlson, and Mannheimer. *See* Pet. 63–69. For the reasons stated below, we find Petitioner has demonstrated by a preponderance of evidence the unpatentability of these claims over Lisogurski, Carlson, and Mannheimer.

1. Petitioner's proposed combination

Petitioner proposes combining Lisogurski's physiological monitoring system shown in Figures 1 and 3, in which sensor 102/312 wirelessly communicates with monitor 104/314, with Carlson's teachings regarding pulsing an LED at a frequency that increases signal-to-noise in a wireless pulse oximeter sensor as discussed in § II.F.1, *supra*. We agree that a person skilled in the art would have been motivated to combine these references for the reasons discussed there. Petitioner further proposes combining Lisogurski and Carlson with the teachings of Mannheimer to detect light at a receiver placed first and second distances from first and second LEDs. *See* Pet. 64–66 (citing/quoting Ex. 1003 ¶ 192–194; Ex. 1008, 3:25–35, 3:38–40,

5:1–5, 5:58–62, 6:17–36, 6:66–7:4. Figs. 1B, 2, 4; Ex. 1011, 17:45, 19:42–50, 44:43–48).

Petitioner articulates sufficient reasoning with rational underpinning to combine the teachings of Mannheimer with the teachings of Lisogurski and Carlson. Mannheimer, like Lisogurski and Carlson, is directed to a "pulse oximetery monitoring and measurement system" that "uses one or more LEDs to alternately emit red and infrared light." Pet. 64 (citing Ex. 1008, 6:17–36, 6:66–7:4. Figs. 2, 4). Lisogurski teaches "light is attenuated differently depending on the tissue" with which it interacts, including skin, and Mannheimer teaches a method for removing interference from skin "by using signals detected from LEDs spaced different distances from a detector." *Id.* at 65 (citing Ex. 1011, 19:42–50, 44:43–48; Ex. 1008, 3:25–35, 5:1–5; Ex. 1003 ¶ 193).

Lisogurski teaches using "multiple light sources and detectors, which may be spaced apart," but does not "identify the spacing that should be used" or the reason to space the detectors apart. *Id.* at 65–66 (citing Ex. 1011, 17:45, Ex. 1003 ¶ 194). Mannheimer, by contrast, teaches a specific configuration of light sources and detectors consisting of a single detector spaced distances r_1 and r_2 from red and IR LEDs, respectively, and using that configuration to measure light absorption attributable to subdermal layer 12, a tissue layer of interest, based on r_1 and r_2. Ex. 1008, 3:25–35, 3:38–40, 5:58–62, 6:17–36, Figs. 1B. Mannheimer teaches this configuration "differs from the conventional single detector pulse oximetry algorithm in that the skin layer signals are excluded from the measurement." *Id.* at 5:1–5. Thus, Petitioner demonstrates that a person skilled in the art would have incorporated Mannheimer's teachings into Lisogurski to allow Lisogurski to

measure light absorption from a specific layer of tissue by removing or excluding the light absorption due to surface tissue layers. Patent Owner does not dispute this. *See* PO Resp. 14–32.

2. Claims 8 and 16

Claim 16 depends from claim 13, and further requires the receiver to be located a first distance from and to receive a first signal from a first one of the plurality of light emitting diodes, and to be located a different, second distance from and to receive a second signal from a second one of the plurality of light emitting diodes. Ex. 1001, 32:10–15. Claim 8 depends from claim 5, and adds the same limitations to claim 5. *Compare id*. at 30:24–30, *with id*. at 32:10–15.

Petitioner demonstrates how Mannheimer teaches this limitation by disclosing detector 24 receiving first signal 18 from first LED 17 located first distance r_1 from detector 24, and receiving second signal 22 from second LED 16 located second distances r_2 from detector 24. Pet. 66–67 (citing Ex. 1008, 3:18–24, 5:58–62. Fig. 1B; Ex. 1003 ¶ 198). Patent Owner does not dispute this. *See* PO Resp. 14–32.

For the reasons discussed above, we find Petitioner has demonstrated by a preponderance of evidence that claims 8 and 16 are unpatentable over the combination of Lisogurski, Carlson, and Mannheimer.

3. Claims 9 and 17

Claim 17 depends from claim 16, and further requires the receiver's output signal to be generated in part by comparing the first and second signals. Ex. 1001, 32:16–17. Claim 9 depends from claim 8, and adds the same limitations to claim 8. *Compare id*. at 30:31–32, *with id*. at 32:16–17.

Petitioner demonstrates how Mannheimer teaches this limitation by

"calculating an arterial oxygen saturation level" related to "the arterial blood saturation of . . . deeper tissue" by calculating "a ratio R from I_1 and I_2," where I_1 is a first intensity "corresponding to the [first] signal 18 detected from light emitted by [first LED] E_1" and I_2 is a second intensity "corresponding to the [second] signal 2[2] detected from light emitted by [second LED] E_2." Pet. 68–69 (quoting/citing Ex. 1008, 2:16–18, 3:35–5:9, 5:23–57; Ex. 1003 ¶¶ 202–204). Patent Owner does not dispute this. *See* PO Resp. 14–32.

For the reasons discussed above, we find Petitioner has demonstrated by a preponderance of evidence that claims 9 and 17 are unpatentable over the combination of Lisogurski, Carlson, and Mannheimer.

III. CONCLUSION

We have reviewed the Petition, Patent Owner Response, Petitioner Reply, and Patent Owner Sur-Reply. We have considered all of the evidence and arguments presented by Petitioner and Patent Owner, and have weighed and assessed the entirety of the evidence as a whole.

We determine, on this record, that Petitioner has demonstrated by a preponderance of evidence that claims 5, 7–10, 13, and 15–17 of the '533 patent are unpatentable over Lisogurski and Carlson.[8] We further determine

[8] Should Patent Owner wish to pursue amendment of the challenged claims in a reissue or reexamination proceeding subsequent to the issuance of this decision, we draw Patent Owner's attention to the April 2019 *Notice Regarding Options for Amendments by Patent Owner Through Reissue or Reexamination During a Pending AIA Trial Proceeding*. *See* 84 Fed. Reg. 16,654 (Apr. 22, 2019). If Patent Owner chooses to file a reissue application or a request for reexamination of the challenged patent, we remind Patent Owner of its continuing obligation to

that Petitioner has demonstrated by a preponderance of evidence that claims 8, 9, 16, and 17 of the ’533 patent are unpatentable over Lisogurski, Carlson, and Mannheimer.

Claims	35 U.S.C. §	Reference(s) /Basis	Claims Shown Unpatentable	Claims Not Shown Unpatentable
5, 7–10, 13, 15–17	103	Lisogurski, Carlson	5, 7–10, 13, 15–17	
8, 9, 16, 17	103	Lisogurski, Carlson, Mannheimer	8, 9, 16, 17	
Overall Outcome			5, 7–10, 13, 15–17	

IV. ORDER

It is hereby:

ORDERED that claims 5, 7–10, 13, and 15–17 of the ’533 patent are unpatentable under 35 U.S.C. § 103(a) as obvious over Lisogurski and Carlson;

FURTHER ORDERED that claims 8, 9, 16, and 17 of the ’533 patent are unpatentable under 35 U.S.C. § 103(a) as obvious over Lisogurski, Carlson, and Mannheimer; and

FURTHER ORDERED that this Decision is final, and a party to this proceeding seeking judicial review of the Decision must comply with the notice and service requirements of 37 C.F.R. § 90.2.

---

notify the Board of any such related matters in updated mandatory notices. *See* 37 C.F.R. § 42.8(a)(3), (b)(2).

UNITED STATES PATENT AND TRADEMARK OFFICE

BEFORE THE PATENT TRIAL AND APPEAL BOARD

APPLE INC.,
Petitioner,

v.

OMNI MEDSCI, INC.,
Patent Owner.

Case IPR2019-00916
Patent 9,651,533 B2

HORVATH, Administrative Patent Judge, Concurring

I concur with the panel decision, and write separately to express additional reasons I find Lisogurski alone or in combination with Carlson teaches the pulse rate limitation.

A. Lisogurski alone

As noted in § II.F.2.d(1) of the panel decision, Petitioner contends that Lisogurski alone teaches the pulse rate limitation. *See* Pet. 35–36. Although Patent Owner disputes this contention, Patent Owner nevertheless states that Lisogurski teaches "three different techniques for improving SNR," including "by modulating the light signal to correlate with 'physiological pulses' such as a 'cardiac pulse.'" PO Resp. at 15. Petitioner argues this statement is an admission that Lisogurski teaches the pulse rate limitation,

e.g., by increasing the LED pulse rate to match an increased cardiac cycle rate. *See* Pet. Reply 11.

I agree. Patent Owner's statement characterizing Lisogurski is an admission by a party-opponent under the Federal Rules of Evidence, which apply to this proceeding. *See* 37 CFR § 42.62(a). Petitioner offers the statement "against an opposing party." Fed. R. Evid. 801(d)(2) (2014); *see also* Pet. Reply 11 ("Omni admitted that cardiac cycle modulation is a technique for increasing SNR."). The statement appeared in Patent Owner's principal brief and was made by Patent Owner's designated counsel, who was appointed by Patent Owner "to transact all business . . . associated with any *inter partes* review . . . before the Patent Trial & Appeal Board pertaining to the above-captioned ['533] patent." PO Resp. 15, 32; Paper 8, 1–2; Paper 9, 2. Thus, the statement was made by an "agent or employee on a matter within the scope of that relationship and while it existed." Fed. R. Evid. 801(d)(2)(D) (2014). This makes the statement an admission that Lisogurski's light source is configured to increase signal-to-noise by increasing the LED firing rate to match an increased cardiac cycle rate. *See Cook Group Inc. v. Boston Scientific Scimed, Inc.*, 809 F. App'x 990, 1000 (Fed. Cir. 2020) ("It is well established . . . that a statement made by a party in an individual or representative capacity may be offered as evidence against that party.").

Given the disclosures in Lisogurski identified by Patent Owner and discussed in the panel decision at § II.F.2.d(1), particularly Lisogurski's disclosure that modulating an LED drive signal to match "particular segments of a respiratory cycle may provide an increased signal-to-noise ratio," I find Patent Owner's admission that Lisogurski teaches "improving

SNR" by "modulating the light signal to correlate with 'physiological pulses' such as a 'cardiac pulse'" to be credible evidence that Lisogurski teaches increasing signal-to-noise by increasing the LED pulse rate to match an increased cardiac cycle rate. PO Resp. at 15; Ex. 1011, 25:66–26:14; *see also Nekolny v. Painter*, 653 F.2d 1164, 1172 (7th Cir. 1981), *cert. denied*, 455 U.S. 1021 (1982) (finding admissions are credible evidence because "an agent or servant who speaks on any matter within the scope of his agency or employment during the existence of that relationship, is unlikely to make statements damaging to his principal or employer unless those statements are true.").

B. Lisogurski and Carlson

As also noted in § II.F.2.d(1) of the panel decision, Petitioner also argues that the combination of Lisogurski and Carlson teaches the pulse rate limitation. *See* Pet. 37–39. In our Institution Decision, we made a preliminary finding that Petitioner was reasonably likely to show how the combination of Lisogurski and Carlson teaches the pulse rate limitation because Carlson teaches it. *See* Dec. Inst. 34–35. Specifically, we found:

> Carlson teaches that "standard pulsoximeter sensors suffer from signal instability and insufficient robustness versus environmental disturbances," and provides, as an example, disturbances caused when a person wearing a sensor experiences alternating cycles of sunshine and shade "at a certain frequency" while walking or driving along a tree-lined avenue. Ex. 1009 ¶¶ 4, 68. Carlson teaches removing such disturbances by pulsing the sensor LEDs at a frequency that is "outside the frequency spectrum of sunlight[9] and of ambient

[9] Carlson identifies the "frequency spectrum" of sunlight as 0 Hz. *See* Ex. 1009, Fig. 7b. We understand this passage of Carlson to be referring to

> light" in order to "increas[e] significantly the Signal-to-Noise." *Id.* ¶ 69. Carlson does not teach pulsing the LEDs at any particular frequency, but instead teaches pulsing at some frequency f_0 and "using AC-Coupling or Lock-In Amplification . . . to temporarily modulate the optical radiation of the LED at the carrier frequency f_0 in order to shift the power spectrum of the pulsoximeter signals into a higher frequency range where environmental optical radiation is unlikely." *Id.* ¶¶ 65, 69. Although Carlson gives a particular example of pulsing the LEDs at 1000 Hz, that example pertains to sampling pulsed LED light that has been transmitted through or reflected from a sample in the presence of 0 to 120 Hz noise. *Id.* ¶ 69. Carlson more generally teaches "shift[ing] the power spectrum of the pulsoximeter signals into a higher frequency range where environmental optical radiation is unlikely."

Dec. Inst. 34–35 (footnote in original).

Patent Owner disagrees with that preliminary analysis, arguing "Carlson does ***not*** disclose increasing a pulse rate of a light source to increase SNR as claimed." PO Resp. 17 (citing Ex. 2122 ¶ 84). Patent Owner's argument is two-fold. First, Patent Owner argues that Carlson only teaches "modulating the light source at a chosen single, fixed pulse rate, not ***increasing*** the pulse rate." PO Resp. 17 (citing Ex. 2122 ¶ 79). Second, Patent Owner argues switching "from an ***unmodulated*** light source to a temporary modulated light source at a chosen, unvarying pulse rate" does not teach "increasing [the light source's] pulse rate." PO Sur-Reply 13.

---

the frequency of alternating periods of sunshine and shade, rather than to the actual frequency spectrum of sunlight, which is quite broad. The frequency spectrum of alternating periods of sunshine and shade would be 0 Hz when a person is standing in continual sunshine or continual shade, but would increase when travelling down a tree-lined street based on the spacing between trees and the speed of travel. *Id.* ¶ 68.

Petitioner replies that Carlson teaches "increasing the SNR of a pulsoximeter to improve its performance in the presence of noise, such as ambient light." Pet. Reply 13 (citing Pet. 23–24; Ex. 1009 ¶ 2). Petitioner argues that Carlson's "device is designed to address ***changing*** environmental conditions" because Carlson teaches "the amount of ambient light varies over time." *Id.* (citing Ex. 1009 ¶ 7). For example, Carlson teaches its "device '***temporarily*** modulate[s] the amplitude of the optical radiation of, e.g., the LED at a carrier frequency f_c in order ***to shift the power spectrum*** of the pulsoximeter signals ***into a higher frequency range*** where environmental optical radiation is unlikely." *Id.* at 14 (citing Ex. 1009 ¶ 20). Petitioner interprets this to mean the "device will change how its LEDs pulse based on the presence and characteristics of ambient light at any particular moment in time," and will do so by "shifting the frequency of an LEDs emission 'to a higher frequency range.'" *Id.*

Petitioner argues its interpretation of Carlson is supported by claims 10–13 of Carlson, which recite "a light source amplitude modulating means to modulate the frequency of the emitted light" that can "***shift the frequency*** of the emitted light." *Id.* at 15 (citing Ex. 1009, 6[10] (claims 10–13)). Moreover, Petitioner argues that "[b]ecause the nature of ambient light changes over time, it would be natural to interpret Carlson as describing multiple pulse frequencies." *Id.* at 16. Petitioner cites the testimony of Dr. MacFarlane, Patent Owner's expert, to support this contention. *Id.* According to Dr. MacFarlane, "[b]ecause sunlight variations and the weather

[10] The citation here is to Carlson's page number and claim number because the claims do not have separately numbered paragraphs.

are constantly changing environmental conditions, it would be impractical, as a matter of common sense, to have the user manually reconfigure the LED pulse rate as conditions change." Ex. 1060, 34:5–35:7.

Patent Owner argues we should ignore claims 10–13 of Carlson because Petitioner "never made this argument in its Petition." PO Sur-Reply 14. Patent Owner further argues we should ignore Dr. MacFarlane's "common sense" testimony because Petitioner "presented no 'common sense' argument in its Petition." *Id.* at 15.

As an initial matter, I disagree that the evidence presented in Petitioner's Reply should be ignored. Petitioner argued—*in the Petition*—that Carlson teaches increasing the pulse rate of an LED. *See* Pet. 38 ("Figure 8 of Carlson shows increasing the operating frequency F_0 of the LEDs as compared to Fig. 7c," and "[t]his frequency shift . . . corresponds to increasing the '*pulse rate*' of the emitter" LEDs). Although Petitioner supports this argument with new evidence in its Reply, the Reply does not raise a new issue or argument. *See Chamberlain Group, Inc. v. One World Techs., Inc*., 944 F.3d 919, 925 (Fed. Cir. 2019) ("Parties are not barred from elaborating on their arguments on issues previously raised."). Moreover, the new evidence cited in Petitioner's Reply can be considered because Patent Owner had an adequate opportunity to address it in its Sur-Reply. *See In re NuVasive, Inc.*, 841 F.3d 966, 972 (Fed. Cir. 2016) (finding "an opportunity to respond was needed when the petitioner . . . newly pointed to a previously unmentioned portion of the . . . prior-art patent, even though it had earlier focused extensively on other portions of that prior-art patent").

Upon consideration of all the evidence and argument presented by Petitioner and Patent Owner, discussed above, I am persuaded that a person

of ordinary skill in the art would have understood Carlson to teach a light source configured to increase signal-to-noise in the presence of changing environmental conditions by increasing the modulation frequency or pulse rate of the light source. I disagree with Patent Owner's contention that Carlson only chooses a "fixed" or "predetermined" value for the LED pulse rate or modulation frequency at design-time. *See* PO Resp. 17–27, PO Sur-Reply 11–13. The only evidence Patent Owner offers for this contention is Carlson's statement that the modulation frequency is "chosen," and Dr. MacFarlane's opinion that this means a "fixed" value for the modulation frequency is chosen at design-time. *Id.*; *see also* Ex. 2122 ¶¶ 75–79. This evidence is unpersuasive for two reasons. First, Carlson does not expressly disclose choosing a "fixed" modulation frequency at design-time. Second, Dr. MacFarlane's testimony to that effect is not credible in view of Dr. MacFarlane's testimony regarding how a person skilled in the art would design a light source for use in changing lighting conditions.

Carlson's only teaching about choosing the modulation frequency of the light source is the following: "[I]t is therefore proposed to emit light by the LEDs not as current or continuous light but as pulsed light. The [pulse] frequency is chosen in such a way that it is outside the frequency spectrum of sunlight and of ambient light which, according to FIG 7b, is in the range of above approximately 1000 Hz." Ex. 1009 ¶ 69. Although this passage of Carlson teaches choosing a 1000 Hz pulse rate or modulation frequency, that choice is based on the specific power spectrum of the environmental optical radiation that is shown in Figure 7b. *Id.* But Carlson does not teach that the power spectrum shown in Figure 7b is fixed. To the contrary, Carlson teaches "[t]he power spectrum of environmental optical radiation *strongly*

varies as a function o[f] time and place where the pulsoximeter is used." *Id.* ¶ 7 (emphasis added). Thus, a person skilled in the art would read Carlson as choosing an appropriate modulation frequency at run-time based on the power spectrum of the environmental optical radiation existing at run-time. That is, a person skilled in the art would read Carlson to teach choosing a modulation frequency at *run-time* that "shift[s] the power spectrum of the pulsoximeter signals into a higher frequency range where environmental optical radiation is unlikely" because the "power spectrum of [the] environmental optical radiation *strongly* varies as a function o[f] time and place where the pulsoximeter is used," i.e., as a function of run-time values of time and place. *Id.* ¶¶ 7, 65 (emphasis added).

Carlson's claims support this interpretation. Claim 10 recites a "light source modulating means to *shift the frequency* of the emitted light." *Id.* at 6 (emphasis added). Claim 11 recites "a light source amplitude modulating means to *modulate the frequency of the emitted light in a frequency range* substantially outside of [the] frequency of noise and/or environmental signals." *Id.* (emphasis added). Given Carlson's teachings that the frequency spectrum of the environmental optical radiation *strongly* depends on the time and place where the pulsoximeter is used (i.e., *run-time* conditions), claims 10 and 11 teach a person skilled in the art that Carlson's modulation frequency f_c or pulse rate is "chosen" at run-time to allow the device to operate outside the frequency range of the power spectrum of the environmental optical radiation that exists at run-time, and that the pulse rate can be "shifted" to allow the device to continue to operate outside the frequency range of that power spectrum as that frequency range varies with the time and place of pulsoximeter use. *Id.* ¶¶ 7, 65; *id.* at 6 (claims 10, 11).

In fact, in the course of explaining how the light source in the '533 patent "achieve[s] higher SNR despite 'variations due to sunlight' and the 'effects of weather, such as clouds and rain,'" Dr. MacFarlane provides a coherent explanation of *why* a person skilled in the art would read Carlson to teach choosing a suitable pulse rate or modulation frequency at run-time rather than a fixed pulse rate or modulation frequency at design-time. Ex. 2122 ¶ 36. According to Dr. MacFarlane, the light source disclosed in the '533 patent increases signal-to-noise by increasing its pulse rate or modulation frequency "[b]ecause sunlight variations and the weather are *constantly changing environmental conditions*, [and] it would be impractical—as a matter of common sense—to have the user manually reconfigure the LED pulse rate as conditions change to achieve higher SNR." *Id.* (emphasis added). Dr. MacFarlane testifies that a person skilled in the art would never "ask[] a consumer to learn what SNR is and force that consumer to -- adjust it as a cloud moves across the sun and then back again." Ex. 1060, 36:1–7. That, Dr. MacFarlane says, "would be impractical and not a very nice product design to -- to -- to force your user to do that. And that seems -- that seems a matter of common sense, to me, but, again, that's from the perspective of a person of ordinary skill in the art." *Id.* at 36:9–13.

To understand why this testimony supports Petitioner's interpretation of Carlson, it is necessary to first explore how Dr. MacFarlane finds support for the pulse rate limitation in columns 5, 16, 19, and 20 of the '533 patent, and two publications incorporated into the '533 patent in column 1. *See* Ex. 2121 ¶¶ 24–25, 35–36 (citing Ex. 1001, 1:33–37, 1:40–42, 5:11–15, 16:54–58, 19:67–20:2; Ex. 2120 ¶ 79; Ex. 2121 ¶ 45). As discussed in § II.D.3 of

the panel decision, the passage in column 5 of the '533 patent identically supports the pulse rate limitation because it repeats it verbatim. *Compare* Ex. 1001, 5:11–15, *with id.* at 30:56–60. It does not, however, illuminate the meaning of the limitation because the passage was added to the Specification at the same time the limitation was added to then pending claim 14, which issued as claim 13, and no explanation was provided to indicate how the originally filed Specification supports the limitation. *See* Ex. 1002, 495–496, 502–503, 505–507.

The remaining passages cited by Dr. MacFarlane do not illuminate the meaning of the pulse rate limitation because they do not disclose a light source configured to increase signal-to-noise by increasing its pulse rate. For example, although the passage from column 19, line 67 to column 20, line 2 states that LEDs can be operated in "continuous wave or pulsed mode," it does not state that the pulse rate can be increased to increase signal-to-noise.[11] Ex. 1001, 19:67–20:2. Similarly, although the passage in the PCT publication incorporated by reference in column 1[12] states the "active illuminator" achieves high signal-to-noise using "modulation and lock-in techniques" whereby "the light source may be modulated, and then the detection system would be synchronized with the light source," it does not state that signal-to-noise is increased by increasing the modulation

[11] Carlson also discloses that LEDs can be operated in either continuous or pulsed mode. *See* Ex. 1009 ¶ 69 (proposing to emit LED light "not as current or continuous light but as pulsed light").

[12] This disclosure is nearly identical to the disclosure in the '533 patent. *Compare* Ex. 2120 ¶ 75 *with* Ex. 1001, 16:54–65.

frequency or pulse rate of the light source.[13] Ex. 2120 ¶ 75. Likewise, although the passage in the published patent application incorporated by reference in column 1 states "continuous-wave systems emit light at approximately constant intensity or modulated at low frequencies, such as 0.1–100 kHz," it does not state that the modulation frequency or pulse rate of the light source is increased to increase signal-to-noise.[14] Ex. 2121 ¶ 45. In sum, to conclude the '533 patent's "active illuminator" increases signal-to-noise by increasing its pulse rate, Dr. MacFarlane ultimately relies on the "common sense" and knowledge of a person of ordinary skill in the art rather than on any actual disclosure in the '533 patent.

As discussed above, Carlson also teaches that sunlight and ambient light can interfere with a pulsoximeter signal in a manner that varies with time and place, and that the resulting interference can be reduced to increase signal-to-noise by modulating the pulsoximeter's LED. *See* Ex, 1009 ¶¶ 2, 7, 65, 67. For example, Carlson is "particularly concerned with increasing the technical performance of pulsoximetry in terms of quality and robustness of the measurement signal versus environmental disturbances." Ex. 1009 ¶ 2. Carlson teaches the modulation "frequencies of sunlight and ambient

---

[13] Carlson also discloses increasing signal-to-noise by "using AC-Coupling or Lock-In Amplification (synchronous detection) to temporarily modulate the optical radiation of the LED." Ex. 1009 ¶¶ 65, 69. According to Carlson, lock-in detection techniques are "well known out of the state of the art." *Id.* ¶ 65.

[14] Carlson also discloses that LEDs can be pulsed at different pulse rates. *See* Ex. 1009 ¶ 69 (disclosing the LED pulse rate "F_0 could be e.g., as mentioned, 1000 Hz" or "can be chosen at any other frequency, as e.g. 2000 Hz or even higher.").

light" are sources of interference because they are within "the range of frequencies of physiological signals." *Id.* ¶ 67. Carlson teaches "[t]he power spectrum of [this] environmental optical radiation *strongly varies* as a function o[f] time and place where the pulsoximeter is used." *Id.* ¶ 7 (emphasis added). This strong variation means the "detected optical power varies in a large [frequency] range, making difficult the analog and digital signal processing of the primary sensor signal." *Id.* Carlson's solution is to "temporarily modulate the . . . LED at the carrier frequency f_c in order to shift the power spectrum of the pulsoximeter signals into a higher frequency range where environmental optical radiation is unlikely." *Id.* ¶ 65. Carlson does this by choosing modulation frequency f_c "in such a way that it is outside the frequency spectrum of sunlight and ambient light" using a light source modulating means that "shift[s] the frequency of the emitted light" and "modulate[s] the frequency of the emitted light in a frequency range substantially outside of the frequency of noise and/or environmental signals." *Id.* ¶ 69 (emphasis added); *id.* at 6 (claims 10, 11).

Yet, despite all of Carlson's teachings about the variable nature of the interference caused by sunlight and how that interference can be reduced by modulating the LEDs at a pulse rate or modulation frequency that exceeds the varying frequency spectrum of the interference, and despite Dr. MacFarlane's testimony that a person skilled in the art would never "ask[] a consumer to learn what SNR is and force that consumer to -- adjust it as a cloud moves across the sun and then back again," Dr. MacFarlane opines that a person skilled in the art would read Carlson as choosing a "fixed" pulse rate at design-time rather than a "suitable" pulse rate at run-time that reduces the actual interference seen at run-time. *See* Ex. 1060, 36:1–7l; *see*

also Ex. 2122 ¶¶ 75–79. That is, Dr. MacFarlane opines that a person skilled in the art would read Carlson to teach choosing a "fixed" pulse rate at design-time that either will or will not improve signal-to-noise because it either will or will not shift the pulsoximeter power spectrum beyond the power spectrum of the run-time environmental noise. This is not a credible reading of Carlson. A more credible reading is that a person skilled in the art would read Carlson to teach choosing a suitable pulse rate at run-time that *will* improve the signal-to-noise ratio because it *will* shift the pulsoximeter power spectrum beyond the power spectrum of the run-time environmental noise. Moreover, Carlson's pulsoximeter will update its choice of pulse rate during operation, as needed, as the power spectrum of the environmental noise varies with the time and place of the pulsoximeter's use, e.g., by increasing the LED pulse rate.

In addition to disagreeing with Patent Owner's contention that Carlson only teaches switching from continuous light to light modulated at 1000 Hz for the reasons explained above, I also disagree with Patent Owner's contention that such switching does not increase the pulse rate of the light source. Implicit in Patent Owner's argument is the assumption that a light source emitting continuous light does not have a pulse rate or modulation frequency that can be increased. This assumption is contrary to the teachings of Carlson.

Figure 7b of Carlson is reproduced below.

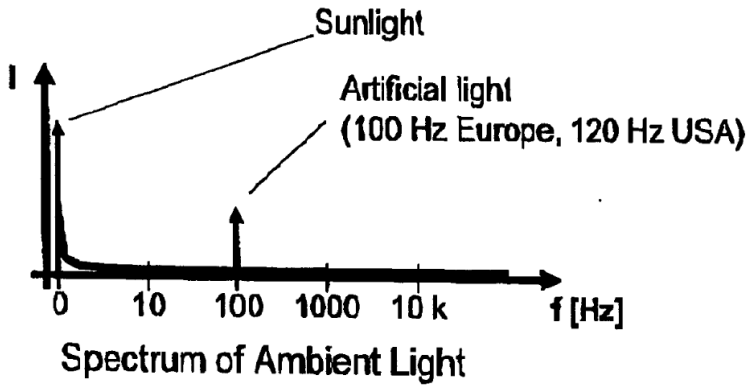

Figure 7b is "a diagram showing [the] power spectrum of ambient light." Ex. 1009 ¶ 43. In the exemplary power spectrum shown in Figure 7b, the noise contribution due to "[s]unlight is 0 Hz." *Id.* ¶ 67, Fig. 7b. The power spectrum shown in Figure 7b is exemplary because Carlson more generally teaches the noise contribution due to sunlight depends on its modulation frequency, i.e., how frequently a pulsoximeter experiences alternating periods of sunlight and shade. *See id.* ¶ 68 ("Another serious possibility is caused by a tree avenue when driving along the trees. Sunlight is then received, e.g., by the pulsoximeter sensor at *a certain frequency*, which means that every time when passing a tree, sunlight is attenuated and between trees sunlight is influencing the measurement of the pulsoximetric sensor.") (emphasis added).

In our Institution Decision, we made a preliminary finding that Figure 7b of Carlson teaches sunlight contributes noise at 0 Hz when pulsoximeter measurements are taken in either continuous sunshine or continuous shade. *See* Dec. Inst. 34, n.7 ("The *frequency spectrum* of alternating periods of sunshine and shade *would be 0 Hz* when a person is standing *in continual sunshine or continual shade*, *but would increase when travelling down a*

tree-lined street based on the spacing between trees and the speed of travel.") (emphases added). Patent Owner does not dispute this finding, despite having had two opportunities to do so. *See* PO Resp. 14–32; PO Sur-Reply 11–16. Carlson's teaching that continuous sunlight contributes noise at a frequency of 0 Hz is a teaching that continuous sunlight has a modulation frequency of 0 Hz, i.e., that it is not modulated or that its intensity does not periodically vary between sunshine and shade. That is, Carlson teaches that continuous light has a modulation frequency or pulse rate of 0 Hz. Therefore, even under Patent Owner's narrow interpretation of Carlson, in which Carlson increases signal-to-noise by switching from emitting continuous light to emitting light modulated at 1000 Hz, Carlson teaches increasing signal-to-noise by increasing the modulation frequency or pulse rate of the light source from 0 Hz to 1000 Hz.

For PETITIONER:

Jeffrey Kushan
Ching-Lee Fukuda
Thomas Broughan
SIDLEY AUSTIN LLP
jkushan@sidley.com
clfukuda@sidley.com
tbroughan@sidley.com

For PATENT OWNER:

Thomas Lewry
John LeRoy
Robert Tuttle
John Halan
Christopher Smith
BROOKS KUSHMAN P.C.
tlewry@brookskushman.com
jleroy@brookskushman.com
rtuttle@brookskushman.com
jhalan@brookskushman.com
csmith@brookskushman.com