IN THE UNITED STATES DISTRICT COURT
FOR THE EASTERN DISTRICT OF TEXAS
MARSHALL DIVISION

XIFI NETWORKS R&D, INC., Plaintiff, v. SAMSUNG ELECTRONICS, CO., LTD. and SAMSUNG ELECTRONICS AMERICA, INC., Defendants.	Case Nos. 2:24-cv-01057-JRG JURY TRIAL DEMANDED

SAMSUNG'S P.R. 3-3 AND 3-4 INVALIDITY CONTENTIONS

I. INTRODUCTION

Defendants Samsung Electronics, Co., Ltd. and Samsung Electronics America, Inc. (collectively, "Samsung") provide these Invalidity Contentions to Plaintiff XiFi Networks R&D, Inc. ("XiFi") for the following patents (collectively, "Asserted Patents") and claims (collectively, "Asserted Claims"), which were identified as asserted in XiFi's Disclosure of Asserted Claims and Infringement Contentions served on March 26, 2025 ("Infringement Contentions"):

U.S. Patent No.	Asserted Claims
11,818,591 ("'591 patent")	1-5, 10, 13-18, 20-22, 26
11,849,337 ("'337 patent")	1-2, 15-26, 30
11,856,414 ("'414 patent")	1-4, 13-26, 30
11,974,143 ("'143 patent")	1, 5-10, 12-20, 25, 30
11,950,105 ("'105 patent")	1-8, 10-11, 14-23, 30
12,003,976 ("'976 patent")	1-8, 10-11, 14-30
12,015,933 ("'933 patent")	1-8, 10-11, 14-30
12,114,177 ("'177 patent")	1-9, 11-12, 14-21, 24-26
12,169,756 ("'756 patent")	1-8, 10, 12, 14-30
12,190,198 ("'198 patent")	1-8, 10, 12, 14-30
12,250,564 ("'564 patent")	1-8, 10, 12, 14-29

II. RESERVATIONS AND EXPLANATIONS

These Invalidity Contentions and accompanying document productions are subject to

Patent Owner's Ex. 2005
Samsung v. iCashe (PGR2025-00069)
Page 001

further revision as follows. Nothing in these contentions constitutes an admission concerning the priority date, conception date, or date of reduction to practice of the Asserted Claims. Samsung reserves the right to modify or supplement these Invalidity Contentions, including in response to any positions taken or information disclosed regarding the priority date, conception date, or date of reduction to practice of the Asserted Claims.

This disclosure is directed to invalidity issues only and does not address other defenses or grounds, including but not limited to: claim construction, non-infringement, patent misuse, inequitable conduct, estoppel, prosecution laches, waiver, acquiescence, patent exhaustion, unfair competition, unclean hands, express or implied license, or non-statutory defenses of any sort. Samsung reserves all rights with respect to such issues, including but not limited to their position that the Asserted Claims are to be construed in a particular manner and are not infringed.

For prior art patents and prior art publications identified in these Invalidity Contentions, Samsung reserves the right to rely on the public use, offer for sale, sale, and/or actual products embodying the methods and systems described therein uncovered during discovery. Samsung also reserves the right to rely on any related patents and patent applications, foreign patent counterparts and foreign patent applications of U.S. patents identified in these Invalidity Contentions, and U.S. counterparts of foreign patents and foreign patent applications identified in these Invalidity Contentions.

Samsung also contends that the Asserted Patents are invalid in view of public knowledge and uses and/or offers for sale or sales of products and services qualifying as prior art under 35 U.S.C. § 102(a)(1).

Samsung also reserves the right to rely on any system, public knowledge or use embodying or otherwise incorporating any of the prior art disclosed herein alone or in combination. Samsung

Patent Owner's Ex. 2005
Page 002

further reserves the right to rely on any other documents or references describing any such system, knowledge, or use. Samsung also reserves the right to rely on physical exemplars of these prior art systems (and will make the same available for inspection).

Samsung's Invalidity Contentions are based in part on Samsung's present understanding of the Asserted Claims and XiFi's apparent interpretation of these claims as reflected in its Infringement Contentions. By including prior art that anticipates or renders obvious claims based on XiFi's apparent or explicit claim interpretations, Samsung is not agreeing that XiFi's claim interpretations are correct. Any invalidity analysis depends on claim construction, which is a question of law reserved for the Court. Samsung reserves the right to amend, supplement, or materially modify its Invalidity Contentions in response to any claim construction positions that XiFi may take in this case or any claim construction the Court may adopt in this case. Samsung also reserves the right to assert that a claim is indefinite, not enabled, or fails to meet the written description requirement, in response to any additional claim construction positions XiFi may take in this case or any further claim construction the Court may adopt in this case. And to the extent any element in an Asserted Claim is governed by 35 U.S.C. § 112(f), Samsung's invalidity charts identify the corresponding structure and function as present in the prior art.

Samsung contends that XiFi appears to be pursuing overly broad constructions of the Asserted Claims in an effort to piece together an infringement claim where none exists and to accuse products that do not practice the claims as properly construed. At the same time, XiFi's Infringement Contentions are in many respects too general and vague to discern exactly how XiFi contends the accused instrumentalities practice each element of the Asserted Claims. These Invalidity Contentions are not intended to be, and are not, an admission that the Asserted Claims are infringed by any of Samsung's products or technology, that any particular feature or aspect of

the accused instrumentalities practices any element of the Asserted Claims, or that any of XiFi's proposed constructions are supportable or proper. To the extent that any of the prior art references disclose the same functionality or feature of any of the accused instrumentalities, Samsung reserves the right to argue that said feature or functionality does not practice the Asserted Claims, and to argue, in the alternative, that if said feature or functionality is found to practice the Asserted Claims, then the prior art reference demonstrates that that feature or functionality is not novel, is obvious, or is not patentable.

The accompanying invalidity claim charts provide examples of prior art that discloses, either expressly or inherently, every limitation of certain claims and/or teachings, suggestions and motivations through which a POSITA at the time of the alleged invention would have considered the limitations obvious in view of the state of the art at the time, the differences between the claimed invention and the state of the art, and the foreseeability from a technical perspective and/or marketing and/or natural and expected evolution of the art. Where Samsung cites to a particular figure in a reference, the citation should be understood to encompass the caption and description of the figure and any text relating to the figure. Conversely, where Samsung cites to particular text referring to a figure, the citation should be understood to include the figure as well. As discovery progresses and the scope and focus of the liability issues become clearer, Samsung may rely on uncited portions of the prior art.

Samsung reserves the right to revise its contentions concerning the invalidity of the Asserted Claims, which may change depending on discovery taken in the case, the Court's construction of the Asserted Claims, any findings as to the priority date of the Asserted Claims, and/or positions that XiFi or expert witness(es) may take concerning claim construction, infringement, and/or invalidity issues.

Patent Owner's Ex. 2005
Page 004

Samsung may rely on XiFi's or any inventor's admissions concerning the scope of prior art relevant to the Asserted Patents; deposition testimony of relevant third-parties; the patent prosecution histories for the Asserted Patents; any deposition testimony of the named inventor on the Asserted Patents; and the papers filed and any evidence submitted by XiFi in connection with this litigation. For example, Samsung reserves the right to assert that the Asserted Claims are invalid under 35 U.S.C. §§ 102(a)(1), 102(a)(2), and/or 282 in the event that Samsung obtains evidence that the named inventor did not invent (either alone or in conjunction with others) the subject matter claimed in the Asserted Patents. Samsung further reserves the right to assert that the Asserted Claims are invalid and/or unenforceable should evidence arise that the applicant of the Asserted Patents failed to name all proper inventors and/or omitted as an inventor a material contributor to the purported conception of the claimed inventions. Should Samsung obtain such evidence, it will provide the name(s) of the person(s) from whom and the circumstances under which the claimed invention or any part of it was derived.

Prior art not included in this disclosure, whether known or not known to Samsung, may become relevant. In particular, Samsung is currently unaware of the extent, if any, to which XiFi will contend that limitations of the Asserted Patents are not disclosed in the prior art identified by Samsung. To the extent such an issue arises, Samsung reserves the right to identify other references that would render obvious the allegedly missing limitation(s) of the disclosed device or method. Further, because Samsung has not yet completed its search for or analysis of relevant prior art, Samsung reserves the right to revise, amend, and/or supplement the information provided herein, including identifying, charting, and relying on additional references, should Samsung's further search and analysis yield additional information or references, consistent with the Federal Rules of Civil Procedure. XiFi also has a duty to produce to Samsung all relevant documents from other

proceedings involving the patents related to the asserted patents or their subject matter, including but not limited to all prior art invalidity contentions and expert reports on invalidity among other relevant items.

Additionally, because third-party discovery is not yet complete, Samsung reserves the right to present additional items of prior art located during the course of such discovery or further investigation, and to assert invalidity to the extent that such discovery or investigation yields information forming the basis for such invalidity. For example, Samsung has issued or plans to issue subpoenas to (and has received and expects to receive, voluntarily or subject to subpoenas, information from) third parties believed to have knowledge, documentation, and/or corroborating evidence concerning some of the prior art listed below and/or additional prior art. These third parties include, without limitation, some or all of the authors, inventors, vendors, or assignees of some or all of the references listed in these disclosures.

Samsung further reserve the right to modify or add additional contentions in the event that XiFi provides amended infringement contentions and to the extent the Court orders or allows XiFi to amend its infringement contentions.

Pursuant to the Scheduling Order, and in light of XiFi's Infringement Contentions and accompanying claim chart, Samsung lists in these Invalidity Contentions the prior art now known to it that it contends anticipates or renders obvious the Asserted Claims. Although Samsung has identified at least one disclosure of a limitation for each prior art reference, each and every disclosure of the same limitation in the same reference is not necessarily identified. In an effort to focus the issues, Samsung's citations are only to representative portions of an identified reference, even where a reference may contain additional support for a particular claim limitation. POSITAs generally read an item of prior art as a whole and in the context of other publications and literature.

Thus, to understand and interpret any specific statement or disclosure within a prior art reference, such persons would rely on other information within the reference, along with other publications and their general scientific knowledge. Samsung may rely on uncited portions of the prior art references and on other publications and expert testimony to provide context, and as aids to understanding and interpreting the portions that are cited.

Samsung incorporates in these Invalidity Contentions, in full, all prior art references cited in the Asserted Patents and their prosecution histories.

Subject to Samsung's reservation of rights, Samsung identifies each item of prior art that anticipates and/or renders obvious the Asserted Claims. The patents/applications, publications, and systems identified are also relevant to show the state of the art and reasons and motivations for making improvements, additions, and combinations.

III. PRIORITY DATE OF THE ASSERTED PATENTS AND CLAIMS

XiFi asserts that the Asserted Claims are each entitled to a priority date of October 30, 2013. (Infringement Contentions, p. 6). XiFi's asserted priority claims are as set forth in the table and the tree diagram below:

Patent	Priority Claim
'591 patent	Continuation of App. Ser. No. 16/039,660 (unasserted '834 patent), which is Continuation of App. Ser. No. 14/526,799 (unasserted '179 patent), which claims priority to: (1) Prov. App. Ser. No. 61/897,219 and (2) Prov. App. Ser. No. 61/897,216 (both filed Oct. 30, 2013)
'337 patent	Continuation of App. Ser. No. 17/468,509 ('591 patent)
'414 patent	Continuation of App. Ser. No. 17/468,509 ('591 patent)
'143 patent	Continuation of App. Ser. No. 17/468,509 ('591 patent)
'105 patent	Continuation of App. Ser. No. 18/448,281 ('337 patent)
'976 patent	Continuation of App. Ser. No. 18/532,175 ('105 patent)
'933 patent	Continuation of App. Ser. No. 18/532,175 ('105 patent)
'177 patent	Continuation of App. Ser. No. 18/532,175 ('105 patent)
'756 patent	Continuation of App. Ser. No. 18/621,425 ('564 patent)
'198 patent	Continuation of App. Ser. No. 18/787,267 ('756 patent)
'564 patent	Continuation of App. Ser. No. 18/532,175 ('105 patent)

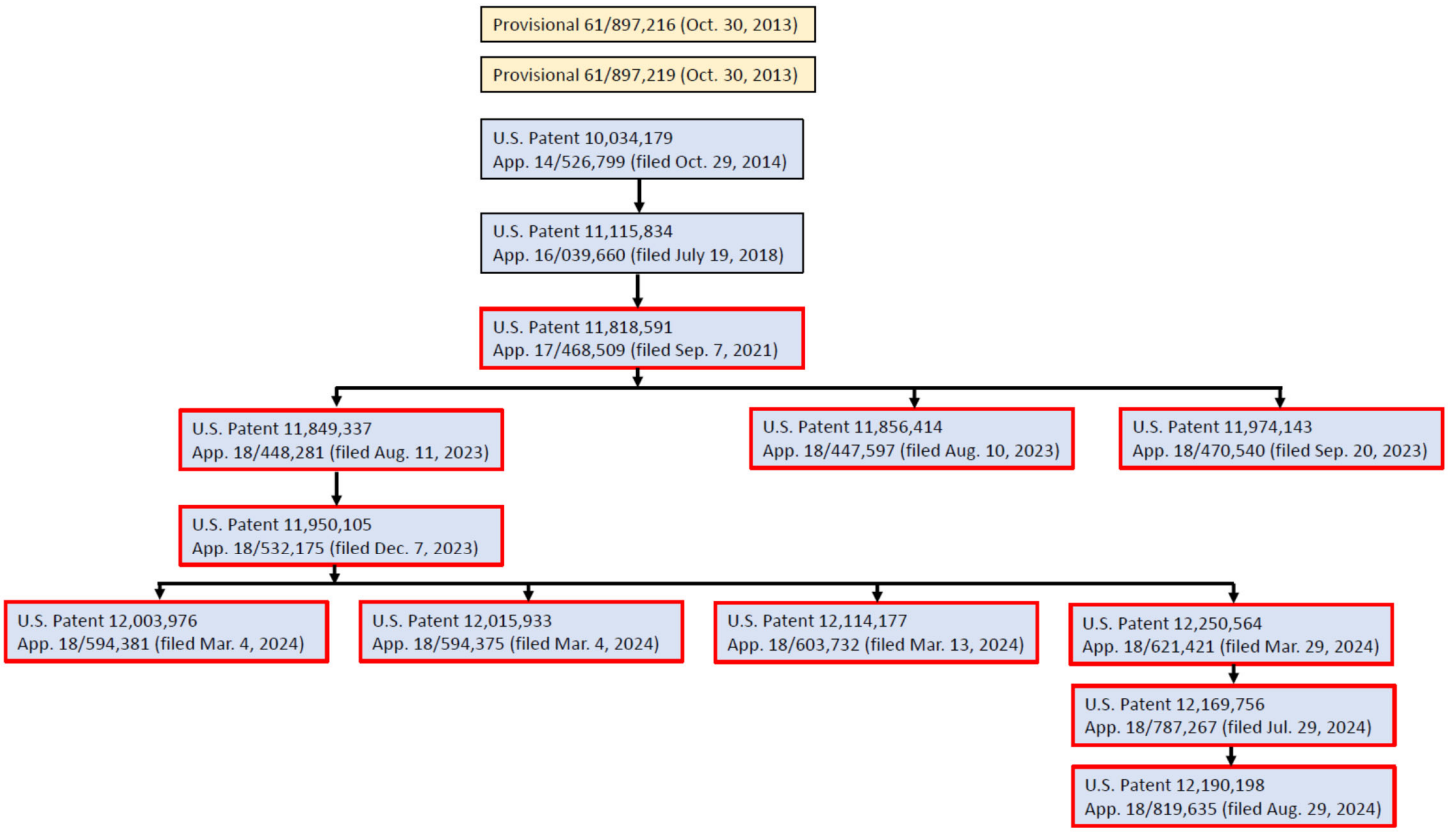

It is XiFi's burden to show entitlement to its asserted priority date, and Samsung asserts that XiFi has failed to meet that burden. *See Tech. Licensing Corp. v. Videotek, Inc.*, 545 F.3d 1316, 1327 (Fed. Cir. 2008); *see also, In re Magnum Oil Tools Int'l, Ltd.*, 829 F.3d 1364, 1376 (Fed. Cir. 2016) ("[A] patentee bears the burden of establishing that its claimed invention is entitled to an earlier priority date than an asserted prior art reference."). For example, XiFi has failed to show that Asserted Claims in the continuation patents are supported by the parent application that resulted in the allowed '591 patent (Application No. 17/468,509), much less U.S. Provisional Applications 61/897,216 and 61/897,219, to which all Asserted Patents ultimately claim priority. To the extent it is determined that any claim of any of the Asserted Patents cover subject matter unsupported by prior applications and/or the provisional applications, and are thus

entitled to a later priority date and not the asserted priority date, Samsung reserves the right to rely on intervening prior art to demonstrate the invalidity of such claims.

Samsung has focused on prior art that predates the asserted priority date. Samsung reserves the right to amend these Invalidity Contentions with additional prior art and/or with additional charts of the art if XiFi alleges earlier or later priority dates or if it is determined that some or all of the Asserted Claims are not entitled to the asserted priority date.

In addition, XiFi has not identified a date of conception or reduction to practice for the Asserted Patents. In purported compliance with Patent Rule 3-2(b), XiFi has produced scanned or photographed images of papers that may or may not be from the alleged inventor's files. *See* Infringement Contentions, p. 7. Some of these are undated, some appear to bear dates from November and December 2012, and some bear dates from 2002. Samsung therefore also reserves its right to amend its Invalidity Contentions if XiFi supplements this production, is permitted to allege earlier dates of conception for the patents-in-suit, or if XiFi does not meet its burden to prove the priority dates it asserts.

IV. PRIOR ART REFERENCES

Samsung identifies the following prior art now known to Samsung to anticipate the Asserted Claims under at least 35 U.S.C. §§ 102(a)(1) and/or 102(a)(2), either expressly or inherently as understood by a POSITA, and/or render obvious under 35 U.S.C. § 103, either alone or in combination. Samsung contends that the prior art references described below anticipate or render obvious, either alone or in combination, one or more of the Asserted Claims. These prior art references also provide evidence of the level of ordinary skill in the art and provide background information showing the state of the art and demonstrating the knowledge of a person of ordinary skill in the art. Samsung reserves the right to rely on these references for those purposes.

Samsung additionally incorporates by reference all prior art references cited on the face of the Asserted Patents, each related patent, and each foreign counterpart. Samsung further incorporates by reference all prior art references identified in the file histories of the same. Samsung reserves the right to rely upon foreign counterparts of the U.S. Patents identified in these Invalidity Contentions; U.S. counterparts of foreign patents and foreign patent applications identified in these Invalidity Contentions; U.S. and foreign patents and patent applications corresponding to articles and publications identified in these Invalidity Contentions; and any systems, products, or prior inventions related to any references identified in these Invalidity Contentions.

In these Invalidity Contentions, including the exhibits, any citation to a printed publication or other reference describing a prior art system should also be construed to include a reference to the prior art system itself.

Each Asserted Patent has asserted claims with limitations that are substantially similar to limitations of other asserted claims of that Asserted Patent. Each Asserted Patent also has asserted claims with limitations that are substantially similar to limitations of asserted claims from other Asserted Patents. For example, many of the asserted claims recite a "wireless networking device" recite "transceivers" with various properties, recite virtual and actual MAC and PHY interfaces, recite a similar sequence of identifying bandwidth of interest, evaluating that bandwidth, and using that bandwidth to send or receive data streams, etc. Samsung reserves the right to rely on references and obviousness arguments charted for a limitation of one asserted claim when invalidating another asserted claim with a similar limitation.

Similarly, these Invalidity Contentions, including the exhibits, may contain citations to certain embodiments disclosed in a prior art reference but not to all embodiments disclosed in that

Patent Owner's Ex. 2005
Page 010

reference. Samsung reserves the right to rely on variant embodiments in cited prior art references even if those variant embodiments are not otherwise specifically cited.

A. Prior Art Patents and Publications

Prior Art	Effective Filing Date	Publication / Issue Date	Country of Origin
EP1775888A2	Jul. 7, 2000	Apr. 18, 2007	EPO
EP1878169B1	April 29, 2005	November 7, 2018	EPO
EP2016750B1	April 21, 2006	September 27, 2017	EPO
EP2055072B1	August 24, 2006	April 17, 2013	EPO
EP2330843A1	December 3, 2009	June 8, 2011	EPO
EP2555578A1	August 4, 2011	February 6, 2013	EPO
EP2713670A1	September 27, 2012	April 2, 2014	EPO
EP3174323B1	April 18, 2012	November 14, 2018	EPO
EP3220697B1	January 22, 2013	June 6, 2018	EPO
GB2516132A	February 12, 2013	January 14, 2015	Great Britain
KR20070061684A	December 10, 2005	June 14, 2007	Republic of Korea
KR20100067038A	Nov. 11, 2009	Jun. 18, 2010	Republic of Korea
TWI500350B	Oct. 4, 2013	Sep. 11, 2015	Taiwan
US 61/788,556	Mar. 15, 2013	Jun. 11, 2019	USA
US 61/824,338	May 16, 2013	Dec. 3, 2015	USA
US 61/835,488	June 14, 2013	Jan. 18, 2018	USA
US 61/836,571	June 18, 2013	Jan. 18, 2018	USA
US 61/843,797	July 8, 2013	Oct. 11, 2018	USA
US 61/870,762	August 27, 2013	Jan. 18, 2018	USA
US 61/888,692	October 9, 2013	Apr. 9, 2015	USA
US 61/890,309	October 13, 2013	Sep. 27, 2018	USA
US 61/890,713	October 13, 2013	Apr. 16, 2015	USA
US10027452B2	September 1, 2009	July 17, 2018	USA
US10034147B2	September 26, 2013	July 24, 2018	USA
US10044613B2	May 16, 2013	August 7, 2018	USA
US10050762B2	Sep. 24, 2013	Aug. 14, 2018	USA
US10321484B2	Mar. 15, 2013	Jun. 11, 2019	USA
US10567147B2	Aug. 27, 2013	Feb. 18, 2020	USA
US10912083B2	October 9, 2013	February 2, 2021	USA
US10932229B2	April 30, 2012	February 23, 2021	USA
US11115834B2	October 30, 2013	September 7, 2021	USA
US11429407B2	March 15, 2013	August 30, 2022	USA
US20020122465A1	Aug. 3, 2001	Sep. 5, 2002	USA

US20020152305A1	March 3, 2000	October 17, 2002	USA
US20020173271A1	Mar. 21, 2001	Nov. 21, 2002	USA
US20020188723A1	Oct. 12, 2001	Dec. 12, 2002	USA
US20040053602A1	September 18, 2002	March 18, 2004	USA
US20040054766A1	September 16, 2002	March 18, 2004	USA
US20040057461A1	Sep. 4, 2003	Mar. 25, 2004	USA
US20040077338A1	Oct. 4, 2002	Apr. 22, 2004	USA
US20040264362A1	Jun. 27, 2003	Dec. 30, 2004	USA
US20050089064A1	May 21, 1999	April 28, 2005	USA
US20050157638A1	Dec. 30, 2003	Jul. 21, 2005	USA
US20050180460A1	Apr. 18, 2003	Aug. 18, 2005	USA
US20050195821A1	March 3, 2004	September 8, 2005	USA
US20060114851A1	November 30, 2004	June 1, 2006	USA
US20060120473A1	Jan. 24, 2006	Jun. 8, 2006	USA
US20060126577A1	May 17, 2005	Jun. 15, 2006	USA
US20060140123A1	December 2, 2004	June 29, 2006	USA
US20060182145A1	Jan. 19, 2006	Aug. 17, 2006	USA
US20070002898A1	Jun. 13, 2006	Jan. 4, 2007	USA
US20070005675A1	Jun. 29, 2005	Jan. 4, 2007	USA
US20070098093A1	Aug. 29, 2006	May 3, 2007	USA
US20070110198A1	November 14, 2005	May 17, 2007	USA
US20070121573A1	November 25, 2005	May 31, 2007	USA
US20070180119A1	January 31, 2006	August 2, 2007	USA
US20070242695A1	April 18, 2006	October 18, 2007	USA
US20070270121A1	May 18, 2006	November 22, 2007	USA
US20080002631A1	June 28, 2006	January 3, 2008	USA
US20080084855A1	October 5, 2006	April 10, 2008	USA
US20080101280A1	Sep. 24, 2007	May 1, 2008	USA
US20080232337A1	Mar. 21, 2008	Sep. 25, 2008	USA
US20080320156A1	Jun. 23, 2008	Dec. 25, 2008	USA
US20090002556A1	Jun. 11, 2008	Jan. 1, 2009	USA
US20090034460A1	July 31, 2007	February 5, 2009	USA
US20090074051A1	May 14, 2007	March 19, 2009	USA
US20090141691A1	November 30, 2007	June 4, 2009	USA
US20090141691A1	Nov. 30, 2007	Jun. 4, 2009	USA
US20090180451A1	January 10, 2008	July 16, 2009	USA
US20090290524A1	October 10, 2007	November 26, 2009	USA
US20100061346A1	Sep. 16, 2008	Mar. 11, 2010	USA
US20100111023A1	Oct. 31, 2009	May 6, 2010	USA
US20100128630A1	July 13, 2006	May 27, 2010	USA

US20110110289A1	November 6, 2009	May 12, 2011	USA
US20110128919A1	Nov. 30, 2009	Jun. 2, 2011	USA
US20110188487A1	Sep. 7, 2009	Aug. 4, 2011	USA
US20110211541A1	July 8, 2008	September 1, 2011	USA
US20110286404A1	November 20, 2009	November 24, 2011	USA
US20110320625A1	Jun. 28, 2010	Dec. 29, 2011	USA
US20120057536A1	Aug. 16, 2011	Mar. 8, 2012	USA
US20120113320A1	June 17, 2009	May 10, 2012	USA
US20120127857A1	Nov. 19, 2010	May 24, 2012	USA
US20120134328A1	October 11, 2010	May 31, 2012	USA
US20130028150A1	August 8, 2006	January 31, 2013	USA
US20130182601A1	Dec. 7, 2011	Jul. 18, 2013	USA
US20130196653A1	January 30, 2012	August 1, 2013	USA
US20130201847A1	April 26, 2010	August 8, 2013	USA
US20130208589A1	Mar. 15, 2013	Aug. 15, 2013	USA
US20130258921A1	April 3, 2012	October 3, 2013	USA
US20130281049A1	April 18, 2012	October 24, 2013	USA
US20130308543A1	Oct. 28, 2011	Nov. 21, 2013	USA
US20140003449A1	June 28, 2012	January 2, 2014	USA
US20140056209A1	August 24, 2012	February 27, 2014	USA
US20140075189A1	September 7, 2012	March 13, 2014	USA
US20140075523A1	September 10, 2012	March 13, 2014	USA
US20140213219A1	January 16, 2013	July 31, 2014	USA
US20140269468A1	Mar. 14, 2013	Sep. 18, 201	USA
US20140269505A1	March 15, 2013	September 18, 2014	USA
US20140269560A1	March 15, 2013	September 18, 2014	USA
US20140269610A1	March 1, 2013	September 18, 2014	USA
US20140321282A1	December 8, 2011	October 30, 2014	USA
US20150023245A1	July 17, 2013	January 22, 2015	USA
US20150098359A1	October 4, 2013	April 9, 2015	USA
US20150103740A1	Oct. 14, 2013	Apr. 16, 2015	USA
US20150110036A1	May 23, 2012	April 23, 2015	USA
US20150181486A1	September 27, 2013	June 25, 2015	USA
US20150237667A1	August 15, 2013	August 20, 2015	USA
US20160014127A1	January 16, 2013	January 14, 2016	USA
US20160044711A1	March 15, 2013	February 11, 2016	USA
US20160157231A1	June 28, 2013	June 2, 2016	USA
US3488445A	Nov. 14, 1966	Jan. 6, 1970	USA
US5073899A	July 12, 1989	December 17, 1991	USA
US5345599A	Feb. 21, 1992	Sep. 6, 1994	USA

US5805804A	Mar. 12, 1997	Sep. 8, 1998	USA
US5818830A	1995-12-29	October 6, 1998	USA
US6097771A	Jul. 1, 1996	Aug. 1, 2000	USA
US6317466B1	Apr. 15, 1998	Nov. 13, 2001	USA
US6385752B1	Jun. 1, 1999	May 7, 2002	USA
US7110374B2	Apr. 16, 2002	Sep. 19, 2006	USA
US7120138B2	Mar. 7, 2002	Oct. 10, 2006	USA
US7206840B2	Oct. 12, 2001	Apr. 17, 2007	USA
US7245879B2	Dec. 31, 2003	Jul. 17, 2007	USA
US7372890B2	Jan. 27, 2006	May 13, 2008	USA
US7373443B2	December 18, 2003	May 13, 2008	USA
US7539175B2	Nov. 18, 2005	May 26, 2009	USA
US7664072B1	July 14, 2000	February 16, 2010	USA
US7706326B2	Dec. 21, 2004	Apr. 27, 2010	USA
US7764742B2	Aug. 28, 2007	Jul. 27, 2010	USA
US7784076B2	October 30, 2004	August 24, 2010	USA
US7797723B2	October 30, 2004	September 14, 2010	USA
US7929409B2	Jan. 13, 2005	Apr. 19, 2011	USA
US8059611B2	Feb. 19, 2008	Nov. 15, 2011	USA
US8078208B2	March 20, 2003	December 13, 2011	USA
US8140076B2	Dec. 17, 2007	Mar. 20, 2012	USA
US8165091B2	Jun. 27, 2008	Apr. 24, 2012	USA
US8175539B2	April 22, 2002	May 8, 2012	USA
US8223721B2	Nov. 25, 2008	Jul. 17, 2012	USA
US8279876B2	October 14, 2005	October 2, 2012	USA
US8355358B2	Dec. 1, 2009	Jan. 15, 2013	USA
US8363597B2	April 9, 2009	January 29, 2013	USA
US8369349B2	Mar. 25, 2010	Feb. 5, 2013	USA
US8411608B2	February 26, 2010	April 2, 2013	USA
US8451735B2	Sep. 28, 2009	May 28, 2013	USA
US8483236B2	Jul. 31, 2007	Jul. 9, 2013	USA
US8531946B2	October 16, 2007	September 10, 2013	USA
US8565178B2	December 3, 2010	October 22, 2013	USA
US8565194B2	Oct. 27, 2005	Oct. 22, 2013	USA
US8619581B2	January 11, 2011	December 31, 2013	USA
US8667318B2	Jun. 11, 2008	Mar. 4, 2014	USA
US8671302B2	Jun. 11, 2008	Mar. 11, 2014	USA
US8699418B2	Jun. 8, 2011	Apr. 15, 2014	USA
US8718558B2	April 18, 2012	May 6, 2014	USA
US8767726B2	January 12, 2007	July 1, 2014	USA

US8813142B2	May 25, 2004	Aug. 19, 2014	USA
US8818276B2	May 16, 2012	August 26, 2014	USA
US8837454B2	May 8, 2012	September 16, 2014	USA
US8848608B1	January 14, 2011	September 30, 2014	USA
US8848639B2	April 18, 2011	September 30, 2014	USA
US8873453B2	May 14, 2008	Oct. 28, 2014	USA
US8875193B2	May 14, 2008	Oct. 28, 2014	USA
US8880104B2	Feb. 28, 2007	Nov. 4, 2014	USA
US8897279B2	September 5, 2008	November 25, 2014	USA
US8908493B2	Jan. 11, 2013	Dec. 9, 2014	USA
US8923816B2	July 28, 2011	December 30, 2014	USA
US8971273B2	October 9, 2012	March 3, 2015	USA
US8977218B2	May 4, 2011	Mar. 10, 2015	USA
US8982762B2	September 27, 2012	March 17, 2015	USA
US8982820B1	Oct. 15, 2012	Mar. 18, 2015	USA
US8989101B1	June 27, 2013	March 24, 2015	USA
US8989165B2	July 14, 2000	March 24, 2015	USA
US9014196B2	Sep. 9, 2003	Apr. 21, 2015	USA
US9055592B2	Jan. 7, 2013	Jun. 9, 2015	USA
US9060352B2	Aug. 14, 2012	Jun. 16, 2015	USA
US9083568B2	October 11, 2010	July 14, 2015	USA
US9131511B2	January 11, 2012	September 8, 2015	USA
US9144037B2	Aug. 9, 2010	Sep. 22, 2015	USA
US9160396B2	November 17, 2010	October 13, 2015	USA
US9198184B2	January 30, 2013	November 24, 2015	USA
US9204489B2	February 2, 2011	December 1, 2015	USA
US9241370B2	June 14, 2013	January 19, 2016	USA
US9258712B2	September 4, 2012	February 9, 2016	USA
US9281928B2	April 18, 2011	March 8, 2016	USA
US9294926B2	October 7, 2011	March 22, 2016	USA
US9320019B2	December 23, 2011	April 19, 2016	USA
US9379868B2	Jul. 31, 2012	Jun. 28, 2016	USA
US9380470B2	August 9, 2007	June 28, 2016	USA
US9397943B2	August 31, 2012	July 19, 2016	USA
US9402199B2	October 14, 2013	July 26, 2016	USA
US9408254B2	September 9, 2011	August 2, 2016	USA
US9467379B2	August 28, 2013	October 11, 2016	USA
US9467953B2	July 8, 2013	October 11, 2016	USA
US9516540B2	December 17, 2013	December 6, 2016	USA
US9526022B2	August 3, 2012	December 20, 2016	USA

US9532253B2	September 26, 2013	December 27, 2016	USA
US9560656B2	October 17, 2013	January 31, 2017	USA
US9560661B2	May 22, 2013	January 31, 2017	USA
US9578663B2	December 8, 2011	February 21, 2017	USA
US9596169B2	Mar. 15, 2013	Mar. 14, 2017	USA
US9603192B2	January 15, 2014	March 21, 2017	USA
US9650794B2	August 8, 2013	May 16, 2017	USA
US9699734B2	November 17, 2011	July 4, 2017	USA
US9706383B2	January 4, 2013	July 11, 2017	USA
US9716659B2	March 23, 2011	July 25, 2017	USA
US9736714B2	March 3, 2011	August 15, 2017	USA
US9743345B2	October 4, 2013	August 22, 2017	USA
US9785455B2	October 13, 2013	October 10, 2017	USA
WO199908464A1	Jul. 21, 1998	Feb. 18, 1999	WIPO
WO2007014310A2	Jul. 27, 2006	Feb. 1, 2007	WIPO
WO2013126859A2	Feb. 24, 2013	Aug. 29, 2013	WIPO
WO2014020407A1	Jul. 30, 2013	Feb. 6, 2014	WIPO

Publication	**Author**	**Pub. Date**	**Publisher**
On The Use of Bandwidth Aggregation Over Heterogeneous Last Miles	Balakrishnan	2005	IEEE
A Crosslayer-aware Bandwidth Aggregation & Network Condition Determination System Using Multiple Physical Links	Bandyopadhyay	2011	IARIA
A Novel Crosslayer-aware Transmission Queue Adaptation System Using Multiple Physical Links	Bandyopadhyay	2012	IEEE
Bandwidth Aggregation for Real-Time Applications in Heterogeneous Wireless Networks	Chebrolu	2006	IEEE
Aggregating the Bandwidth of Multiple Network Interfaces to Increase the Performance of Networked Applications	Evensen	2011	University of Oslo
Multi-path Scheduling Algorithm for Real-Time Video Applications in Next Generation Wireless Networks	Fernandez	2008	IEEE
OPERETTA: Demonstrating An Optimal Energy Efficient Bandwidth Aggregation System	Habak	2012	IEEE

Optimal Packet Allocation with Airtime Constraint for Multi-Access Links	Kim	2007	IEEE
Dynamic Bandwidth Aggregation for a Mobile Device with Multiple Interfaces	Lin	2005	ISCOM
A-MAC: Adaptive Medium Access Control for Next Generation Wireless Terminals	Vuran	2007	IEEE
An Architecture for Exploiting Multihoming in Mobile Devices for Vertical Handovers & Bandwidth Aggregation	Yousaf	2012	International Journal on Wireless Personal Communications
Developing Practical Wireless Applications	Gratton	2007	Elsevier Digital Press
Robust Security Network (RSN) Fast BSS Transition (FT)	Akin	2008	Certified Wireless Network Professional
Make-Without-Break Horizontal IP Handovers for Distributed Mobility Management Schemes	Condeixa	Prior to October 30, 2013	IEEE
On the Evaluation of Make-Before-Break Handovers in Urban WiFi Networks for Moving Vehicles	Mouton	Prior to October 30, 2013	WONS
Fast-handoff support in IEEE 802.11 wireless networks	Pack	2007	IEEE
Make-Before-Break MAC Layer Handoff in 802.11 Wireless Networks	Ramachandran	2006	IEEE
Transmission of Multiplexed PAM Signals Over Multiple Channel and Diversity Systems	Kaye	Oct. 1970	IEEE
The Bell System Technical Journal, Vol. 53, No. 5	Brandenburg	1974	Bell Systems
On the Capacity of Radio Communications with Diversity in a Rayleigh Fading Environment	Winters	Jun. 1987	Journal on Selected Areas in Communications
Optimum Combining in Digital Mobile Radio with Cochannel Interference	Winters	Jul. 1984	IEEE
Transmitter Diversity for Digital FM paging System	Adachi	Nov. 1979	IEEE
Blind Channel Estimation in Transmit-Receive Antenna Diversity Schemes Using Antenna Precoding	Bolcskei	Oct. 1999	IEEE

Optimizing the Spectral Efficiency of Multiuser MIMO Smart Antenna Systems	Wong	Sep. 2000	IEEE
A Blind Multi-User MIMO Transceiver using Code Modulation in a Multipath Context	Rousseaux	Jul. 2002	IEEE
Multiuser MIMO Systems and Interference Avoidance	Popescu	Apr. 2003	IEEE
Transceiver Optimization for Multiuser MIMO Systems	Serbetli	Jan. 2004	IEEE
IEEE 802.11-2012 Standard for Information Technology—Telecommunications and Information Exchange Between Systems Local and Metropolitan Area Networks—Specific Requirements	IEEE	Mar. 2012	IEEE
P802.11ac/D7.0, Sept 2013 - IEEE Approved Draft Standard for IT - Telecommunications and Information Exchange Between Systems - LAN/MAN - Specific Requirements	IEEE	Sep. 2013	IEEE
IEEE 802.11ac Standard for Information Technology—Telecommunications and Information Exchange Between Systems Local and Metropolitan Area Networks—Specific Requirements[1]	IEEE	Dec. 2013	IEEE

[1] On information and belief, the IEEE 802.11ac standard is substantially reflective of (if not identical to) "P802.11ac/D7.0, Sept 2013 - IEEE Approved Draft Standard for IT - Telecommunications and Information Exchange Between Systems - LAN/MAN - Specific Requirements - Part 11: Wireless LAN Medium Access Control and Physical Layer Specifications - Amd 4: Enhancements for Very High Throughput for operation in bands below 6GHz" ("802.11ac Draft 7.0"). 802.11ac Draft 7.0 was published on September 19, 2013 and is prior art to the asserted patents under at least 35 U.S.C. § 102(a) regardless of whether the asserted patents are entitled to the October 30, 2013 priority date. To the extent the asserted patents are not entitled to the October 30, 2013 priority date, 802.11ac is prior art under at least 35 U.S.C. § 102(a). Discovery is ongoing, but at least the following support Samsung's position:

- From the IEEE 802.11 Grouper page, the first draft of the 802.11ac standard as generated by the 802.11ac Task Group was voted on June 25, 2011. The Task Group worked on five drafts of the 802.11ac standard before circulating Draft 5.00 to the Working Group for voting on April 4, 2013. *See* https://grouper.ieee.org/groups/802/11/LetterBallots.shtml at 17, 19, last visited June 10, 2025.

Simultaneous Transmission and Reception for Improved Wireless Network Performance	Bliss	Aug. 2007	IEEE
Achieving Single Channel, Full Duplex Wireless Communication	Choi	Sep. 2010	MobiCom
Practical, Real-time, Full Duplex Wireless	Jain	Sep. 2011	MobiCom
Pushing the limits of Full-duplex: Design and Real-time Implementation	Sahai	Jul. 2011	Rice University
Distributed Algorithms for Multipath Routing in Full-Duplex Wireless Networks	Fang	Oct. 2011	IEEE
VBLAST A High Capacity Space-Time Architecture	Golden	Sep. 1998	ISART
Detection algorithm and initial laboratory results using V-BLAST space-time communication architecture	Golden	Jan. 1999	IET
V-BLAST: An Architecture for Realizing Very High Data Rates Over the Rich-scattering Wireless Channel	Wolniansky	1998	IEEE
A Spread-Spectrum Multiaccess System with Cochannel Interference	Yoon	Sep. 1993	IEEE

- As shown on the Official IEEE 802.11 Working Group Project Timelines page, Draft 5.0 was then amended twice, with the final revision being 802.11ac Draft 7.0. *See* https://ieee802.org/11/Reports/802.11_Timelines.htm at page 4; last visited June 10, 2025.
- The date of IEEE Standards Association (SA) Ballots on 802.11ac Draft 7.0 was October 23, 2013. Final 802.11 Working Group approval of 802.11ac Draft 7.0 was on November 1, 2013. RevCom & Standards Board Final or Continuous Process Approval was on December 9, 2013. The publication date is listed as December 18, 2013. The 802.11ac Task Group webpage shows that the last Task Group meeting was in September 2013. This page states "This project is now complete. Thank you to everyone who helped." *See* https://grouper.ieee.org/groups/802/11/Reports/tgac_update.htm, last visited June 10, 2025.
- This page also indicates that two of the main achievements of the September 2013 meeting were: i) "Prepare draft D7.0 and start a second recirculation sponsor ballot. Ballot started on September 19 and closed on October 4, 2013," and ii) "Prepared draft report to Revcom requesting conditional approval by November.
- The draft report is available at 11-13/1175r1." The IEEE Xplore website, the digital library and research database of technical content published by the Institute of Electrical and Electronics Engineers (IEEE), provides a list of all "Active," "Superseded," and "Inactive" IEEE 802.11 standards. Under "Inactive" standards is "Draft: P802.11ac/D7.0, Sept 2013 - Dec 20, 2013." *See* https://ieeexplore.ieee.org/document/7797535/versions#versions at page 6, last visited June 10, 2025. 802.11ac Draft 7.0 is the last draft prior to 802.11ac being published as an official 802.11 standard on December 18, 2013.

Cancellation for Multipath Fading Channels			
BLAST Training: Estimating Channel Characteristics for High Capacity Space-Time Wireless	Marzetta	Sep. 1999	Bell Labs
Near Shannon Limit Error-Correcting Coding and Decoding Turbocodes	Berrou	1993	Ecole Nationale Superieure des Telecommunications de Bretagne
The Impact of Antenna Diversity on the Capacity of Wireless Communication Systems	Winters	1994	IEEE
Layered Space-Time Architecture for Wireless Communication in a Fading Environment When Using Multiple Antenna	Foschini	1996	IEEE
On Limits of Wireless Communications in a Fading Environment when Using Multiple Antennas	Foschini	1998	Springer Nature
Capacities of Multi-Element Transmit and Receive Antennas: Correlations and Keyholes	Chiznik	Jun. 2000	IET
Iterative Space-time Processing for Multiuser Detection in Multipath CDMA Channels	Dai	Sep. 2000	IEEE
Achieving High Capacities in CDMA Systems Using Multiuser Detection Based on BLAST	Sfar	Jun. 2001	IEEE
Analysis of Slotted CDMA Packet Access Based on Non-linear Multiuser Detection	Sfar	Feb. 2001	IEEE
Performance of Packetized Layered Space-Time Detection Over Wireless Links	Sfar	Jul. 2001	IEEE
Performance Evaluation of the VBLAST Algorithm in W-CDMA Systems	Samardzija	Oct. 2001	IEEE
Turbo Multiuser Detection for Coded DMT VDSL	Dai	Feb. 2002	IEEE
Layered Space-time Multiuser Detection Over Wireless Uplink Systems	Sfar	Mar. 2002	IEEE
Multiuser Detection for Interference-Limited MIMO Systems	Dai	May 2002	IEEE

MIMO CDMA Antenna System for SINR Enhancement	Choi	Mar. 2003	IEEE
Performance Evaluation of Multiuser Detectors with V-BLAST	Park	Dec. 2005	IEEE
Beamforming in Combination with Space-Time Diversity for Broadband OFDM Systems	Dammann	2002	IEEE
Directional Power-Based Admission Control for WCDMA Systems Using Beamforming Antenna Array Systems	Pederson	2002	IEEE
Application and Performance of Downlink Beamforming Techniques in UMTS	Pederson	Oct. 2003	IEEE
Point to Multipoint Transport in Multichannel Wireless Environments	Khalife	Prior to October 30, 2013	IEEE
Virtual subcarrier assignment with multiple subcarrier puncturing for spatial filtering of OFDM signals	Asai	2004	IEICE
Interference Suppression for OFDM Systems	Wang	2005	IEEE
A pseudo random postfix OFDM based modulator for multiple antennae systems	Muquet	2004	IEEE
Subcarrier Nulling: OFDM Active Interference Cancellation for Coexistence of Heterogeneous Wireless Systems	Leu	2007	IEEE
A selection region based routing protocol for OFDM systems	Li	2008	Beijing Univeristy of Posts and Telecommunications, and Texas A&M University
An Efficient Implementation of NC-OFDM Transceivers for Cognitive Radios	Rajbanshi	2007	IEEE
Interference Avoidance in OFDM-Based Wireless Systems	Huang	2009	IEEE
Multi-carrier OFDM	Mobius Consulting	2008	Mobius Consulting
Advanced Techniques to Improve the Performance of OFDM Systems	Segkos	2004	DTIC
IEEE 802.11ac Task Group Meeting Update, Draft 1.0, Comments (https://mentor.ieee.org/802.11/dcn/1	IEEE	Jul. 2011	IEEE

1/11-11-0907-06-00ac-tgac-d0-1-comments.xls)			
IEEE 802.11ac Task Group Meeting Update (https://grouper.ieee.org/groups/802/11/Reports/tgac_update.htm)	IEEE	Nov. 2009	IEEE
IEEE 802.11, The Working Group for Wireless LANs Standards	IEEE	May 2025	IEEE
Official IEEE 802.11 Working Group Project Timelines	IEEE	May 2025	IEEE
The Evolution of Wi-Fi Technology and Standards (https://standards.ieee.org/beyond-standards/the-evolution-of-wi-fi-technology-and-standards/)	IEEE SA	2023	IEEE
IEEE Standards for Local Area Networks: Carrier Sense Multiple Access with Collision Detection (CSMA/CD) Access Method and Physical Layer Specifications (https://standards.ieee.org/ieee/802.3/1057/)	IEEE SA	1985	IEEE
IEEE Standard for Wireless LAN Medium Access Control (MAC) and Physical Layer (PHY) specifications (https://standards.ieee.org/ieee/802.11/1163/)	IEEE SA	1997	IEEE
802.11ac: The Fifth Generation of Wi-Fi (http://euro.ecom.cmu.edu/resources/elibrary/auto/5th_gen_Wi-Fi.pdf)	Cisco	Aug. 2012	Cisco
802.11ac: A Survival Guide (https://www.oreilly.com/library/view/80211ac-a-survival/9781449357702/ch05.html)	Gast	May 2012	O'Reilly
802.11ac: The Fifth Generation of Wi-Fi (http://euro.ecom.cmu.edu/resources/elibrary/auto/5th_gen_Wi-Fi.pdf)	Cisco	Aug. 2012	Cisco
Amendment 4: Enhancements for Very High Throughput for Operation in Bands below 6 GHz.		Prior to October 30, 2013	IEEE Computer Society
Envisioning llax PHY Structure-Part I	Choi et al.	Jul. 14, 2014	IEEE ll-14/0804rl.

Discussion on OFDMA in Hew	Choi et al.	Nov. 11, 2013	LG Electronics
An Efficient Cooperative Retransmission MAC Protocol for IEEE 802.lln Wireless LANs	Gong, D.; Yang, Y; and Li, H.	Prior to October 30, 2013	IEEE 10th International Conference on Mobile Ad-Hoc and Sensor Systems
Proposed direction and priorities for HEW	Hiertz et al.	Nov. 12, 2013	IEEE 11-13-1331-01
DL-MU-MIMO Transmission with Unequal Bandwidth	Huang et al.	Sep. 16, 2013	IEEE 802. ll-13/ ll 54rl
IEEE 802.ll-13/0544r3		Prior to October 30, 2013	IEEE
IEEE std 802.llac(trn)-2013. Part 11: Wireless LAN Medium Access Control (MAC) and Physical Layer (PHY) Specifications		Prior to October 30, 2013	IEEE
Beyond 802.llac-A Very High Capacity WLAN	Inoue et al.	Mar. 19, 2013	IEEE ll-13/0287r3.
Glia: A Practical Solution for Effective High Datarate Wifi-Arrays	Kakumanu, S. and Sivakumar, R.	Sep. 20-25, 2009	MobiCom '09
Multicast Transmission for Hew	Kim et al.	Sep. 16, 2013	IEEE 802 .11-13/ 106 lr0.
Discussion on Potential Techniques for HEW	Koskela et al.	Jul. 15, 2013	IEEE 802.ll-13/087lr0
A Channel Splitting Strategy for Reducing Handoff Delay in Internet-Based Wireless Mesh Networks	Li, H. and Xie, J.	Jul. 2012	IEEE Transactions on Vehicular Techonolgy,
Envisioning llax PHY Structure-Part II	Lim et al.	Jul. 14, 2014	IEEE 11-14/0S0lr0
Discussions on llac PHY Efficiency	Liu et al.	May 9, 2013	
Performance Analysis of OFDMA in LTE	Prasad, S.S; Shukla, C.K.; and Chisab, R.F.	Jul. 26-28, 2012	IEEE
WiSP: A Protocol for Overcoming MAC Overheads Using Packet Size Dependent Channel Widths	Raman, V. and Vaidya, N.H.	2011	8th Annual IEEE Communications Society Conference on Sensor, Mesh and Ad Hoc Communications and Networks
Analysis of LTE Radio Frame by eliminating Cyclic Prefix in OFDM	Selvakumar, V.; Nemalladinne, S.S.; and Arumugam, P.	Sep. 10, 2012	Degree project. Linnaeus University,

and comparison of QAM and Offset-QAM			
Discretionary bandwidth granting scheme for homogenous real-time applications	Wee et al.	Prior to October 30, 2013	EURASIP Journal on Wireless Communications and Networking
Discussion on Access Mechanism for HEW	Yang et al.	Sep. 18, 2013	IEEE ll-13/1105r0

Samsung additionally identifies and relies on patent or publication references that describe or are otherwise related to the prior art systems identified below, including any patents or publications cited in the claim charts for these systems or elsewhere in these Invalidity Contentions, including Sections V and VI, below. Samsung's investigation into prior art patent and publication references is ongoing, and Samsung reserves the right to identify and rely on additional patent or publication references that are identified through further investigation or discovery.

B. Prior Art Systems and Products

Samsung also contends that the Asserted Claims are invalid based on public knowledge and uses and/or offers for sale or sales of products and services that are prior art under 35 U.S.C. § 102(a)(1) and that anticipate or render obvious the Asserted Claims.

Prior Art	Date of Public Use, Sale, Offer, or Availability	Offering Entity
Picongen Multi-Streaming	April 8, 2009	Picongen Systems
High Speed Packet Access (HSPA), Emcompassing HSDPA and HSUPA, and Its Use of HARQ	2005	3GPP
Qualcomm's EV-DO (Standardized Via 3GPP2)	Jan. 2002	Qualcomm
LTE / 4G (3GPP Release 8)	Mar. 2009	3GPP
LTE-A / LTE Advanced / 4G+ (3GPP Release 10)	June 2011	3GPP
Quantenna 802.11ac chipset for retail Wi-Fi routers and consumer electronics	Nov. 15, 2011	Quantenna
Redpine Signals 802.11ac technology for smartphone application processors	Dec. 14, 2011	Redpine Signals
Broadcom 802.11ac Wi-Fi chips	Jan. 5, 2012	Broadcom

Netgear's Broadcom-enabled router	April 27, 2012	Netgear
Buffalo Technology 802.11ac wireless router and client bridge adapter.	May 14, 2012	Buffalo Technology
Huawei enterprise-level 802.11ac Access Point	Dec. 6, 2012	Huawei
Huawei AP5030DN and AP5130DN	2014	Huawei
Asus ROG G75VX gaming notebook	Jun. 7, 2012	Asus
Apple MacBook Air	Jun. 2013	Apple
HTC One (M7)	Apr. 2012	HTC
Samsung Galaxy S4	Oct. 2013	Samsung
Samsung Galaxy Note 3	Sep. 2013	Samsung
LG Nexus 5	October 31, 2013	LG
IEEE 802.11e-2005	November 11, 2005	IEEE
DVB-S2	March 2005	ETSI
Airflow	December 2001	Airflow
Android 2.2	May 2010	Google
Apple iOS 4.3	2011	Apple
Linksys WRT610N	July 2009	Linksys
Photron Ultra Spectral Modulation	Prior to October 30, 2013	Photron Technologies
Routers and Ultrastreaming Products	Prior to October 30, 2013	XiFi Smart Networks and/or XiFi Networks

Samsung has begun to take discovery of third parties, but the process of identifying and engaging with entities that may have prior art from more than a decade ago is ongoing. Samsung reserves the right to conduct such discovery and supplement these Invalidity Contentions to include any prior art systems and products that render the asserted claims invalid, if necessary. Samsung may use documentation and publications, physical samples, executable software, or source code as evidence of the relevant functionality of these prior art products or services. Samsung will make available for inspection any physical samples of products, systems, or software listed above, and/or any source code therefor, that it has in its possession or that becomes available during discovery.

V. ADMITTED PRIOR ART AND THE COMMON SPECIFICATION

The Asserted Patents share a common specification. Citations in this section (and throughout these Invalidity Contentions) are to the '591 patent, unless otherwise noted.

The ’591 patent relates to evaluating the wireless bandwidth requirements of applications and the wireless bandwidth availabilities of wireless transceiver resources, and allocating bandwidth of the wireless transceivers to satisfy the bandwidth requirements of the applications. ’591 patent at Abstract.

The wireless networking architecture described in the ’591 patent “includes an application layer, actual MAC and PHY layers, and a processing layer between the actual MAC and PHY layers.” *Id.* at 2:41-44. The patent describes how the processing layer may comprise “virtual MAC and PHY layers” that “enable simultaneous allocation of multiple PHY resources for different signal types associated with different applications.” *Id.* at 3:36-38.

For example, in the embodiment of Figure 6, the virtual MAC and PHY layers enable the wireless networking device to configure the resources of two separate transceivers to each handle the bandwidth requirement of a respective application for a single recipient device using asymmetric transmit and receive cycles. *Id.* at 5:31-50.

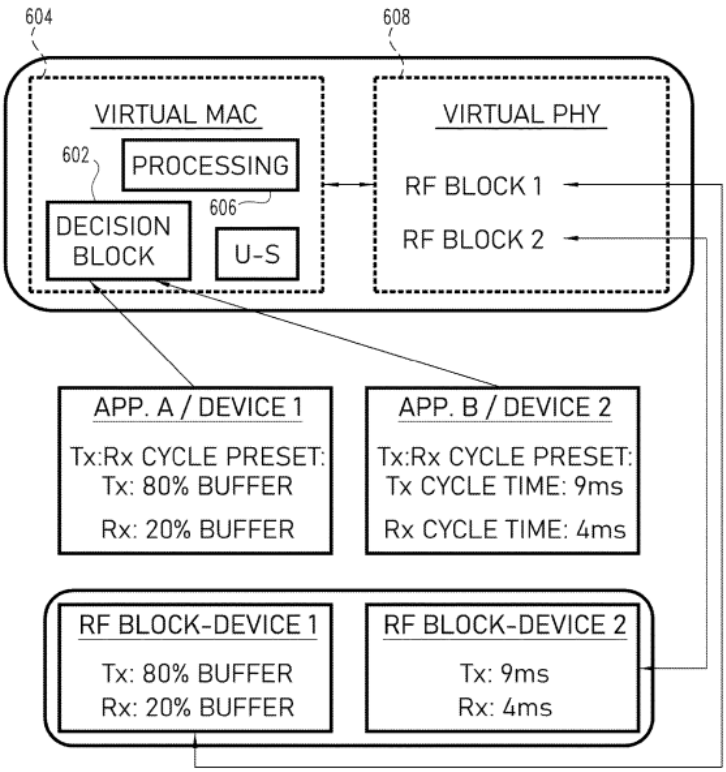

Fig. 6

VI. INVALIDITY UNDER 35 U.S.C. §102 AND §103

A. Anticipation

Samsung contends that the Asserted Claims are invalid as anticipated under 35 U.S.C. § 102 in view of each of the prior art references charted in Exhibits 591-01 to 591-44, 337-01 to 337-44, 414-01 to 414-44, 143-01 to 143-44, 105-01 to 105-44, 976-01 to 976-44, 933-01 to 933-44, 177-01 to 177-44, 756-01 to 756-44, 198-01 to 198-44, and 564-01 to 564-44:

Exhibit No.	Prior Art
###-01	Balakrishnan 2005
###-02	Bandyopadhyay ’601
###-03	Bandyopadhyay 2011
###-04	Bandyopadhyay 2012
###-05	Batra ’890
###-06	Casey ’142
###-07	Chebrolu 2006

###-08	Chen ’156
###-09	Chincholi ’859
###-10	Clegg ’592
###-11	Cordeiro ’543
###-12	Emmanuel ’713
###-13	Emmanuel ’740
###-14	Evensen 2011
###-15	Ginzburg ’675
###-16	Habak 2012
###-17	Hirano '460
###-18	Karaoguz ’273
###-19	Kim ’337
###-20	Kim 2007
###-21	Lin
###-22	Manapragada ’193
###-23	Manapragada ’302
###-24	Manapragada ’318
###-25	Manapragada ’453
###-26	Manapragada ’556
###-27	Seo ’145
###-28	Seong ’037
###-29	Verma ’536
###-30	Vuran 2007
###-31	White ’175
###-32	Yousaf
###-33	Asus
###-34	Broadcom
###-35	HTC
###-36	Huawei
###-37	Macbook
###-38	Netgear
###-39	Quantenna
###-40	Redpine Signals
###-41	Samsung
###-42	3GPP (v 10.10.0)
###-43	80211-2012
###-44	802.11ac

To the extent any item of prior art cited above does not disclose, explicitly or inherently, any limitation of an Asserted Claim, Samsung reserves the right to argue that any difference between that prior art and the corresponding patent claim would have been inherent to the art.

Additional prior art has not been charted, but is still relevant to the anticipation of the Asserted Patents, including without limitation as combination references for prior art that is charted, as well as for evidence of the state of the art at the alleged time of invention, defining the relevant POSITA, and demonstrating how a POSITA would understand the charted prior art. This includes, for example, prior art identified in Sections IV and V of these cover pleadings and in the accompanying exhibits.

B. Obviousness

Each charted prior art reference also renders the Asserted Claims obvious, either alone or in combination with other prior art, as demonstrated in the previously listed claim charts and as further explained in this section.

To the extent any limitation is deemed not to be exactly met by an item of prior art listed above and in the appended charts, then any purported differences are such that the claimed subject matter as a whole would have been obvious to a POSITA at the time of the alleged invention, in view of the state of the art and knowledge of those of ordinary skill in the art. The item of prior art would, therefore, render the relevant claims invalid for obviousness under 35 U.S.C. § 103.

In addition, the references identified above render the Asserted Claims obvious when the references are read in combination with each other. To the extent any reference charted in the exhibits hereto is deemed to lack a particular claim limitation, the limitation and the claim as a whole obvious are obvious because that reference can be combined with one or more of the charted references that do teach the limitation, which combination a POSITA would attempt (for at least the reasons set forth below, in the charts, and in Samsung's forthcoming expert report) with a reasonable expectation of success (for at least the reasons set forth below, in the charts, and in Samsung's forthcoming expert reports).

Also, to the extent any charted reference or combination of charted references is deemed to lack a particular claim limitation even in view of the state of the art, that reference or combination can also be combined with other charted prior art references (as set forth above) or with one or more of the non-charted references described in this section. A POSITA would attempt that combination for at least the reasons set forth below, in the charts, and in Samsung's forthcoming expert report and would do so with a reasonable expectation of success for at least the reasons set forth below, in the charts, and in Samsung's forthcoming expert reports. Such a combination renders that limitation and the claim as a whole obvious.

Additional uncharted prior art, including material referenced herein or produced in conjunction with these Invalidity Contentions, is also relevant to the obviousness of the Asserted Patents, including without limitation as evidence of the state of the art at the alleged time of invention, to define the relevant POSITA, and to demonstrate how a POSITA would have understood the charted prior art and the references disclosed below. This includes prior art identified in Sections IV and V of these cover pleadings and in the accompanying exhibits.

C. Motivations to Combine

For at least the reasons set forth in this section C and the following section D, elsewhere in this invalidity contention cover pleading, and in the charts that are exhibits to these invalidity contentions, a POSITA would have been motivated to combine any of the charted references not disclosing some or all of a limitation of an Asserted Claim with one or more of (1) any of the charted references disclosing that limitation, (2) any of the references specifically identified in these cover pleadings (including section D, below) as disclosing that limitation, and (3) the POSITA's own common sense and knowledge in view of the state of the art. A POSITA would have done so with a reasonable expectation of success, for at least the reasons set forth in the same locations.

These disclosures of motivation and expectation are without prejudice to expert testimony that may be presented in forthcoming expert reports and any testimony that experts retained by Samsung may present according to the Court's schedule. Samsung intends to present expert evidence demonstrating a POSITA's motivation to combine and expectation of success. Such facts and evidence are expert testimony and will be presented in expert reports according to the schedule of the Court. Samsung incorporates by reference its forthcoming expert reports and any testimony of its experts presented according to the Court's schedule.

Motivation to combine or modify the above items of prior art are present, for example, in the references themselves, the Asserted Patents, references cited on the face of the Asserted Patents, the knowledge, skill, or creativity of one of ordinary skill in the art, the prior art as a whole, and/or the nature of the problems allegedly addressed by the Asserted Patents. The law requires no showing of a specific motivation to combine or modify prior art references disclosed herein and in the charts, as each combination or modification of art would have no unexpected results and at most would simply represent a known alternative to one of skill in the art. *See KSR Int'l Co. v. Teleflex, Inc.*, 127 S.Ct. 1727, 1739-40 (2007) (rejecting the Federal Circuit's "rigid" application of the teaching, suggestion, or motivation to combine test, instead espousing an "expansive and flexible" approach). Indeed, the Supreme Court held that a person of ordinary skill in the art is "a person of ordinary creativity, not an automaton" and "in many cases, a person of ordinary skill in the art will be able to fit the teachings of multiple patents together like pieces of a puzzle." *Id*. at 1742. Thus, to a person of ordinary skill in the art, the Asserted Claims represent solutions that would have been obvious to try, with predictable results.

Nevertheless, should additional evidence of motivation to combine or modify be required to render the Asserted Claims obvious, Samsung contends that there was a motivation to combine

the references identified above. That motivation was provided in the nature of the problem allegedly solved by the Asserted Patents, the teachings of the cited prior art itself, and/or the knowledge of a person of ordinary skill in the art. For example, the combinations identified above would have been combined or modified using: known methods to yield predictable results; common sense; known techniques in the same way; a simple substitution of one known, equivalent element for another to obtain predictable results; and/or a teaching, suggestion, or motivation in the prior art generally. In addition, it would have been obvious to try combining or modifying the prior art references identified above because there were only a finite number of predictable solutions and/or because known work in one field of endeavor prompted variations based on predictable design incentives and/or market forces either in the same field or a different one. In addition, the combination of the prior art references would have been obvious because the combination represents known potential options with a reasonable expectation of success.

Additional evidence that there would have been a motivation to combine or modify the prior art references above includes the interrelated teachings of multiple prior art references; the effects of demands known to the design community or present in the marketplace; the existence of a known problem for which there was an obvious solution encompassed by the Asserted Claims; the existence of a known need or problem in the field of the endeavor at the time of the alleged invention(s); and the background knowledge, skill, or creativity that would have been possessed by a person having ordinary skill in the art. Samsung may rely on uncited portions of the prior art references cited and produced, other publications and testimony, and the testimony of experts to establish that a person of ordinary skill in the art would have been motivated to modify or combine certain of the cited references so as to render the claims obvious.

For example, where multiple publications describe the same system, describe devices that are intended to be used together, or are from the same author, publisher, or manufacturer, one of ordinary skill would be motivated and find it obvious to read those publications together and combine their disclosure. As another example, where a product was available in another country, the availability of such a product would motivate a person of ordinary skill to arrive at the same or similar product in the United States. As yet another example, where the prior art identifies the desirability of or plans for future enhancements of a system, a person of ordinary would be motivated to incorporate such enhancements even if the original developer or author was unable to complete those enhancements.

References identified by Samsung relate to the same technological and commercial field as each other and the Asserted Patents. The common specification defined the "technical field" as "relat[ing] to wireless networks, and more specifically to high-bandwidth wireless networks for distributing multi-media content." '591 patent at 1:22-26. Included, therefore, in the field of invention are those references that are or relate to wireless networks and wireless networking devices, methods and systems for improving the bandwidth use of such networks and devices, and methods and systems for distributing multi-media content using such networks and devices. All of the prior art identified by Samsung is within this field.

References identified by Samsung address the same technical issues as each other and as the Asserted Patents, and those references suggest very similar (if not identical) solutions to each other, to those discussed in the Asserted Patents, and to what was generally known as of the asserted priority date.

D. Particular Limitations and Concepts of the Asserted Claims

1. A wireless network device

The Asserted Claims each recite a "wireless networking device" (the preamble of claim 1 of each Asserted Patent) or a variant thereof, and dependent claims further recite that the wireless networking device comprises a "wireless access point" (claim 2 of each of the '591, '105, '976, '933, '177, and ' 564 patents; '337 claim 15, '414 claim 13, '143 claim 18, '756 claim 14, and '198 claim 14), "a handheld computing device" or "handheld computer" ('591 claim 3, '337 claim 16, '414 claim 14), "a tablet" ('414 claim 14) or "a telephone" ('414 claim 22).

The Asserted Patents do not purport to have invented these forms of wireless networking devices. Instead, they merely recite without further elaboration that "the wireless networking system may be employed and/or embedded into a variety of electronic devices, including ***wireless access points***, base stations, ***handhelds***, ***tablets***, computers, ***telephones***, televisions, DVD players, BluRay players, media players, storage devices, or any such devices that use wireless networks to send and receive data." '591 patent at 3:63-4:3.

As of the asserted priority date of October 30, 2013, it was well established that wireless networking device could take on any of the claimed form factors or functions.

A wireless access point is similar to a wireless router or base station and was a fundamental feature of wireless networking, especially 802.11 networking, because it housed the components and provided the processing necessary to connect devices or clients of various sorts to other devices on the wireless network. Although there may be no precise defining line between a router or base station and an access point, an access point generally had fewer value-features than a router, and may have functioned primarily to extend the range of a wireless network provided by a router or base station. But with respect to the features recited in the Asserted Claims and disclosed by the charted references, a POSITA would have understood that

any features disclosed as being part of a router or base station could also be applied to an access point, and the motivation to do so would have been the same as the motivation to implement such functionality on a router or base station. E.g., to deliver improved bandwidth management and a better user experience to users of devices connected to the access point.

Handheld computing devices, including tablets and telephones, were also ubiquitous and well known by the asserted priority date. Handheld telephones and tablets were canonical wireless networking clients. *See, e.g.*, Emmanuel '740 at [0003] and [0142]-[0143]; Chincholi '859 at [0074] and Fig. 1A; Manapragada '453 at 1:18-23, 1:45-51, 5:21-35, Fig. 1; Manapragada '193 at 5:25-39; and Clegg '592 at 5:6-19.

Handheld devices also often had the ability to act as access points themselves, providing "mobile" or "personal" "hot spot" functionality to other clients. For example, the HTC One, released in the United States in April 2012, had this ability. See https://www.informationweek.com/it-leadership/htc-one-x-big-screen-in-thin-fast-phone, https://www.techlicious.com/review/review-of-the-htc-one-x-att/, https://www.theverge.com/2012/4/2/2919202/htc-one-x-review. Android 2.2, released in May 2010 had native support for this functionality (https://developer.android.com/about/versions/android-2.2-highlights.html, https://web.archive.org/web/20111212014923/http://www.geek.com/articles/mobile/android-2-2-to-support-tethering-and-turn-your-phone-into-a-mobile-wifi-hotspot-20100514, https://www.wired.com/2010/05/android-22-froyo-features-usb-wi-fi-tethering/, https://www.engadget.com/2010-05-21-android-2-2-froyo-everything-you-ever-wanted-to-know.html), as did Apple's iOS 4.3 on the iPhone 4, released in the first half of 2011 (https://www.youtube.com/watch?v=CWnZl63JS_g, https://www.engadget.com/2011-03-29-

iphone-4-personal-hotspot-put-to-the-test.html, https://devices.vodafone.com.au/apple/iphone-4-ios4/change-settings/use-tethering-personal-hotspot/, https://appleinsider.com/articles/11/01/11/apples_new_cdma_iphone_has_built_in_wi_fi_hotspot_with_ios_4_2_5, https://lowendmac.com/inews/11ios/0314.html).

If a charted reference does not disclose that the wireless networking device has one of the recited forms (e.g., is an access point, a handheld device, a phone, or a tablet), it would have been obvious to a POSITA to apply the teachings of that reference to a wireless networking device that did have the recited form. Users of such devices often demanded or required support for cutting edge functionality, and a POSITA would therefore have been motivated to apply the other limitations of the asserted claims to these form factors. To the extent the other references disclose implementations of functionality that was standardized before the priority date or that was being considered, before the priority date, for inclusion in a standard, a POSITA would have been motivated to provide that implementation in these form factors because of, for example, the expectations of customers and the competitive market for these products. Also, the same factors that motivated the development of the features disclosed in these references, including for example increased use of multimedia, video communications, and large file transfers, would have motivated a POSITA to apply those features in phone, tablet, and handheld devices, whose users consumed and produced data in ways similar to users of desktop and laptop computers, and to support them in access points, which would have been used in conjunction with client devices.

A POSITA would have had a reasonable expectation of success when applying teaching of a charted reference or knowledge in the state of the art to access points, phones, tables, or handheld devices, even if such wireless networking devices are not explicitly disclosed by the charted reference. One reason is that the charted references teach methods that can be

implemented in software or firmware but use standard transceiver componentry. A POSITA would have known how to deploy the same solution in different form factors or with different ancillary capabilities (e.g., those of an access point, a telephone, or a tablet). Also, and as noted above, various of the charted references disclose these different form factors. Not only would this motivate a POSITA to deploy the similar teachings of the other charted references in such form factors, it would provide POSITA with a reasonable expectation of success in doing so.

2. Applications and Application Interfaces

Each of the Asserted Patents has a single independent claim, and each of those recites that the wireless networking device ***interacts with an application*** (two of the Asserted Patents) or connects with an ***application interface associated with an application*** (the other Asserted Patents). See the below table, with relevant limitations highlighted.

’591[1a]	“an application interface connected to a processing interface, the application interface being associated with a first application, the first application providing, when the wireless networking device is being used, a first data stream and having a first wireless bandwidth requirement”
’337[1a]	“connecting an application interface to a processing interface, the application interface being associated with a first application, the first application providing, when the wireless networking device is being used, a first data stream and having a first wireless bandwidth requirement”
’414[1a]	’337[1a]
’143[1a]	’337[1a]
’105[1a]	’337[1a]
’976[1a]	“a processing interface that is connected to an application interface, the application interface being associated with a first application, the first application providing, when the wireless networking device is being used, a first data stream and having a first wireless bandwidth requirement”
’933[1a]	“providing a processing interface that is adapted to be connected to an application interface of a wireless networking device, the application interface being associated with a first application, the first application providing, after the circuitry has been connected to the application interface and when the wireless networking device is being used, a first data stream and having a first wireless bandwidth requirement”
’177[1a]	’993[1a]

’756[1a]	“a processing interface configured to, during use of the wireless networking device, interact with an application providing a data stream and having a wireless bandwidth requirement”
’198[1a]	“providing a processing interface configured to, during use of the wireless networking device, interact with an application providing a data stream and having a wireless bandwidth requirement”
’564[1a]	’976[1a]

Some of the Asserted Claims also recite a ***second application***:

’591[10a]	“wherein the application interface is associated with a second application, the second application providing, when the wireless networking device is being used, a second data stream and having a second wireless bandwidth requirement”
’337[2a]	’337[2a]
’414[2a]	’337[2a]
’143[10a]	“the first and second wireless bandwidth requirements of the first and second applications”[2]
’976[30d]	“the first wireless bandwidth requirement of the second application”[3]
’933[30d]	’976[30d][4]

Nearly all of the charted references disclose that wireless networking device interacting or connecting to one or more applications, each providing a data stream and having a wireless bandwidth requirement. See the relevant portions cited in the charts, including, e.g., Emmanuel ’740 at [0082], [0088], [0098]; Chincholi ’859 at [0132], [0191], [0320], [0383[, [0386]; White ’175 at Abstract, 3:12-16, 3:20-25, 4:39-45, 5:19-22, Fig. 1A, Fig. 4, 10:38-64, 11:43-52, 12:5-28; Casey ’142 at 8:7-12, 10:41-52, 25:21-25; Hirano ’460 at [0081]-[0097].

To the extent any of the charted references do not explicitly disclose connecting to one or more such applications, a POSITA would have found it obvious to deploy the charted reference

[2] As set forth in the section regarding 35 U.S.C. § 112, this recitation of “second application” lacks antecedent basis. Unasserted claim 30 of the ’143 patent recites language identical to that of ’591 claim 10[a], but ’143 claim 19 does not depend from ’143 claim 30.

[3] As set forth in the section regarding 35 U.S.C. § 112, this recitation of “second application” lacks antecedent basis.

[4] As set forth in the section regarding 35 U.S.C. § 112, this recitation of “second application” lacks antecedent basis.

in such a fashion based on the state of the art. As acknowledged in the patent itself, since long before the alleged priority date there was a "proliferation of multi-media content over wireless networks" and an associated "insatiable demand for more bandwidth over the networks." '591 patent at 1:38-40. In addition to multi-media content, there were large files of other sorts (e.g., CAD files, computer programs, and databases) and interactive services with high bandwidth consumption such as online games and voice/video communication. In each of these scenarios, one or more applications is providing a data stream with the associated content and has a requirement for sufficient bandwidth to allow it to transmit the necessary data in a reasonable amount of time. Indeed, a POSITA would have understood that most applications communicating over a wireless network provide some data stream and have some bandwidth requirement. A wireless networking device is intended to facilitate wireless communication, which necessarily involves communicating with one or more applications each providing a data stream and having a wireless bandwidth requirement.

A POSITA also would have understood that an application interface is what it says: an interface between an application and the rest of a wireless networking device. The Asserted Claims recite no properties of an application interface other than that it be associated with an application, and the Asserted Patents do not even mention an application interface other than in the claims. Accordingly, a POSITA would find that any wireless networking device that communicates or interacts with an application necessarily has something that corresponds to application interface and is responsible for the communication between the application and the wireless networking device.

Beyond this being long-standing state of the art, a POSITA also would have found it obvious to use the wireless networking device as disclosed by each of the charted references with

the applications or application interfaces disclosed by any of the other charted references. A POSITA would have been motivated to attempt the combination for the reasons set forth in the individual charts and for many of the reasons set forth elsewhere in this section. For example, given that interacting with applications was within the state of the art (indeed, was *de rigueur*), a POSITA would have looked to any of the charted references, which are within the same art, if specific examples were necessary. To the extent any of the charted references do not explicitly discloses that the application in question provide a data stream and have a wireless bandwidth requirement, a POSITA would found it obvious to apply the teachings of those charted references that make such a disclosure. For example, although a charted reference might not explicitly recite that data being communicated over the reference's wireless network by the reference's wireless networking device is part of a data stream from an application, all of the charted references are compatible with such a data source. And as a POSITA would have had a reasonable expectation of success, if not a certain expectation of success, in combining the applications disclosed by any of the charted references with the wireless networking devices disclosed by any of the other charted references, because such a combination required little if any modification of the wireless networking device.

3. Transceivers, PHYs, and MACs

All Asserted Claims require the wireless networking device to have two or three ***transceivers***, with each transceiver associated with an actual PHY interface and an actual MAC interface. Also, each requires that each transceiver support a different frequency band.[5] And

[5] As set forth in the section regarding 35 U.S.C. § 112, with respect to these limitations in particular, as least some of the Asserted Claims are worded such that they do not inform a POSITA of their scope with reasonable certainty. For the purposes of this portion of this invalidity contentions, Samsung has construed similar limitations similarly across the Asserted Patents. Samsung reserves the right to amend these invalidity contentions as necessary if the Court orders a different construction.

each of the Asserted Patents has one or more asserted dependent claims that specify those frequences be as set forth in IEEE 802.11 standards. See the below table, where materially identical language is consistently highlighted.

’591[1b]	“first, second, and third actual MAC interfaces connected to the processing interface”
’591[1c]	“first, second, and third actual PHY interfaces connected to the first, second, and third actual MAC interfaces”
’591[1d]	“first, second, and third wireless transceivers respectively associated with the first, second, and third actual PHY interfaces, wherein each one of the first, second, and third wireless transceivers (i) is suitable for use in a wireless local area network, (ii) has a first, second, and third bandwidth availability up to a first, second, and third actual bandwidth, and (iii) is adapted to emit radio waves in first, second, and third different bands of frequencies, the second, and third frequency bands both being higher in frequency than the first frequency band”
’591[4]	“wherein at least one of the first, second and third wireless frequency bands are specified in at least one member of the family of IEEE 802.11 standards”
’591[5]	“wherein the at least one member of the family of IEEE 802.11 standards was in existence as of Oct. 30, 2013”
’337[1b]	“connecting first and second actual MAC interfaces to the processing interface”
’337[1c]	“connecting first and second actual PHY interfaces respectively to the first and second actual MAC interfaces”
’337[1d]	“respectively associating first and second wireless transceivers with the first and second actual PHY interfaces, wherein each one of the first and second wireless transceivers (i) is suitable for use in a wireless local area network, (ii) has a first and second bandwidth availability up to a first and second actual bandwidth, and (iii) is adapted to emit radio waves in first and second different bands of frequencies”
’337[17]	“wherein each one of the first and second frequency bands are specified in at least one member of the family of IEEE 802.11 standards”
’337[18]	’591[5]
’414[1b]	’337[1b]
’414[1c]	’337[1c]
’414[1d]	’337[1d]
’414[16]	’337[17] (but ’414[16] recites “is specified” and not “are specified”)
’414[17]	’591[5]
’143[1b]	“connecting first, second and third actual MAC interfaces to the processing interface”

’143[1c] ’143[1d] ’143[17]	“connecting first, second and third actual PHY interfaces respectively to the first, second and third actual MAC interfaces” “associating first, second and third wireless transceivers respectively with the first, second and third actual PHY interfaces, wherein each of the first, second and third wireless transceivers (i) is suitable for use in a wireless local area network, (ii) has a first, second and third bandwidth availability up to first, second and third actual bandwidths, and (iii) is adapted to emit radio waves in first, second and third bands of frequencies, the first and second frequency bands being different from each other” “wherein at least two of the first, second and third frequency bands are specified in at least one member of the family of IEEE 802.11 standards in existence as of Oct. 30, 2013.
’105[1b] ’105[1c] ’105[1d] ’105[3]	’337[1b] ’337[1d] “respectively associating first and second wireless transceivers with the first and second actual PHY interfaces, wherein each of the first and second wireless transceivers is suitable for use in a wireless local area network, and the first and second wireless transceivers, respectively, (i) have a first and second bandwidth availability up to first and second actual bandwidths, and (ii) are adapted to emit radio waves in first and second different bands of frequencies” “wherein the first and second frequency bands are specified in at least one member of the family of IEEE 802.11 standards that was in existence as of Oct. 30, 2013”
’976[1b] ’976[1c] ’976[1d] ’976[3]	“first and second actual MAC interfaces connected to the processing interface” “first and second actual PHY interfaces respectively connected to the first and second actual MAC interfaces” “first and second wireless transceivers respectively associated with the first and second actual PHY interfaces, wherein each of the first and second wireless transceivers is suitable for use in a wireless local area network, and the first and second wireless transceivers, respectively, (i) have a first and second bandwidth availability up to first and second actual bandwidths, and (ii) are adapted to emit radio signals in first and second different bands of frequencies” ’105[3]
’933[1b] ’933[1c] ’933[1d] ’933[3]	’337[1b] ’337[1c] ’105[1d] ’105[3]
’177[1b] ’177[1c]	’143[1b] ’143[1c]

’177[1d] ’177[3]	“respectively associating first, second and third wireless transceivers with the first, second and third actual PHY interfaces, wherein each of the first, second and third wireless transceivers is suitable for use in a wireless local area network, and the first, second and third wireless transceivers, respectively, (i) have a first, second and third bandwidth availability up to first, second and third actual bandwidths, and (ii) are adapted to emit radio signals in first, second and third bands of frequencies, at least two of the first, second and third bands of frequencies being different” ’143[17] (but ’177[3] recites “that was in existence” and not “in existence”)
’756[1b] ’756[1c] ’756[1d] ’756[2] ’756[3]	’976[1b] ’976[1c] “first and second wireless transceivers respectively associated with the first and second actual PHY interfaces, wherein the first and second wireless transceivers (i) are suitable for use in a wireless local area network, (ii) respectively have first and second bandwidth availabilities up to first and second actual bandwidths, and (iii) are adapted to respectively emit radio waves in first and second different bands of frequencies” “wherein the first frequency band is specified in at least one member of the family of IEEE 802.11 standards that was in existence as of Oct. 30, 2013” “wherein the second frequency band is specified in at least one member of the family of IEEE 802.11 standards that was in existence as of Oct. 30, 2013”
’198[1b] ’198[1c] ’198[1d] ’198[2] ’198[3]	’337[1b] “respectively connecting first and second actual PHY interfaces to the first and second actual MAC interfaces” “respectively associating first and second wireless transceivers with the first and second actual PHY interfaces, wherein the first and second wireless transceivers (i) are suitable for use in a wireless local area network, (ii) respectively have first and second bandwidth availabilities up to first and second actual bandwidths, and (iii) are adapted to respectively emit radio waves in first and second different bands of frequencies” ’756[2] ’756[3]
’564[1b] ’564[1c] ’564[1d] ’564[3]	’976[1b] ’976[1c] ’976[1d] (but ’564[1d] recites “radio waves” and not “radio signals”) ’105[3]

It was known well before the alleged priority date for a wireless networking device to have one or more actual MAC (medium access control) interfaces, each of which was connected to an actual PHY (physical layer) interface. A POSITA would have known that MAC and PHY

interfaces are basic networking concepts: they were included in the IEEE 802.3 standard for ethernet in 1985 and in the first IEEE 802.11 (no suffix) standard for wireless LAN communication in 1997. At least since 2009, wireless networking devices that used multiple wireless transceivers with different frequency bands and were associated with different actual MAC/PHY pairs were not just known in the art but were commercially available. For example, the Linksys WRT610N was released in the United State by July 2009 and featured simultaneous 2.5 GHz and 5 GHz connectivity via an implementation of the draft 802.11n standard. *See, e.g.*, https://www.cnet.com/reviews/linksys-wrt610n-simultaneous-dual-n-band-wireless-router-review/, https://www.smallnetbuilder.com/wireless/wireless-reviews/linksys-wrt610n-simultaneous-dual-n-band-wireless-router-reviewed/, https://www.smallnetbuilder.com/wireless/wireless-features/inside-story-linksys-wrt610n-vs-wrt600n/, https://downloads.linksys.com/downloads/WRT610N_DS_V20_NC-WEB.pdf, https://downloads.linksys.com/downloads/userguide/WRT610N_V20_UG_NC-WEB.pdf, https://downloads.linksys.com/downloads/datasheet/1224644049587/WRT610N_DS_V20_NC-WEB.pdf.

The 2.4 GHz and 5 GHz frequency bands used by the WRT610N and other routers (see, e.g., a 2007 of review of pre-standard routers at https://www.networkcomputing.com/switches-routers/review-802-11n-wi-fi-routers and a 2010 review of post-standard routers at https://www.tomshardware.com/reviews/802.11n-wireless-router-access-point,2605.html (first page of 20 page review)) are specified in the 802.11, 802.11b, 802.11g, and 802.11n standards (2.4 GHz) and 802.11a and 802.11n standards (5 GHz), each of which was in existence as of October 30, 2013. The 5 GHz band is also specified in the 802.11ac standard. Although not finalized until December 2013, starting earlier in 2013 a formal IEEE project certified "Wave 1" wireless

networking devices that implemented Draft 3 of the 802.11ac standard, which was released in May 2012. See http://euro.ecom.cmu.edu/resources/elibrary/auto/5th_gen_Wi-Fi.pdf pp. 18-19 and https://www.oreilly.com/library/view/80211ac-a-survival/9781449357702/ch05.html.

A WLAN device to having multiple transceivers each supporting a different frequency was disclosed in, for example, U.S. Patent No. 10,321,484 ("Lou") at Abstract ("A multiband device may send a request via a first frequency band. The request may include a multiband Request to Send (MRTS) transmission. The request may be associated with a second frequency band and/or a beamforming training schedule. The first frequency band may be associated with a quasi-omni transmission and the second frequency band may be associated with a directional transmission. The first frequency band may be a 5 GHz band and the second frequency band may be a 60 GHz band. . . . The multiband device may be configured to send a beamforming signal in accordance with the request, for example, via the second frequency band."), at 1:45-47 ("The first frequency band may be a 5 GHz band and the second frequency band may be a 60 GHz band."), at 4:41-49 ("In multi-band operation, a communication session may be transferred from a 60 GHz frequency band to a lower frequency band, such as a 5 GHz frequency band, for example. A multi-band capable device may manage operation over one or more frequency bands. The multi-band capable device may support operation on multiple frequency bands, for example, simultaneously. The multi-band capable device may support operation on one frequency band at a time and may transfer between frequency bands."), 6:39-47 ("A device that is capable of transmitting and/or receiving on multiple frequency bands may choose to operate on the multiple bands in parallel. The operations on multiple-bands may be independent. For example, a dual band WiFi AP may operate on a 2.4 GHz band and a 5 GHz band, which may be equivalent to having two co-located APs, one operating on a 2.4 GHz band and another operating on a 5 GHz band, for example, with or without

cooperation between the two APs."), 6:48-58 ("Multiple bands may be allowed to cooperate such that the transmissions on the one or more bands may be more efficient. Multiband operation (e.g., cooperative multiband operation) may consider the characteristics of one or more bands (e.g., each band). For example, a band with longer coverage range but limited bandwidth may be utilized to carry control and/or management information. A band with shorter coverage range and large bandwidth may be utilized to carry data traffic. A band with less interference may be used for control information. A band with more interference may be used for data transmission."), 14:14-17 ("For example, a multi-band device (e.g., MBD1) may include a STA (e.g., STA1-B1, operating on frequency band 1 (B1)), and another STA (e.g., STA1-B2, operating on frequency band 2 (B2))."), at 19:41-53 ("The transmit/receive element 922 may be configured to transmit signals to, or receive signals from, a base station (e.g., the base station 914 a) over the air interface 915/916/917. For example, in one embodiment, the transmit/receive element 922 may be an antenna configured to transmit and/or receive RF signals. . . . It will be appreciated that the transmit/receive element 922 may be configured to transmit and/or receive any combination of wireless signals."), 19:54-61 ("In addition, although the transmit/receive element 922 is depicted in FIG. 9B as a single element, the WTRU 902 may include any number of transmit/receive elements 922. More specifically, the WTRU 902 may employ MIMO technology. Thus, in one embodiment, the WTRU 902 may include two or more transmit/receive elements 922 (e.g., multiple antennas) for transmitting and receiving wireless signals over the air interface 915/916/917."), at 19:62-20:2 ("The transceiver 920 may be configured to modulate the signals that are to be transmitted by the transmit/receive element 922 and to demodulate the signals that are received by the transmit/receive element 922. As noted above, the WTRU 902 may have multi-mode capabilities. Thus, the transceiver 920 may include multiple transceivers for enabling the

WTRU 902 to communicate via multiple RATs, such as UTRA and IEEE 802.11, for example."), Figure 1-3.

As another example, U.S. Patent No. 8,977,218 ("Yen") discloses "[a] multi-mode wireless transceiver and a multi-mode switching method thereof are disclosed to provide at least one wireless transceiving interface capable of dynamically switching between multiple frequency bands." Yen at Abstract. For example, Yen discloses multiple "multi-mode" wireless transceivers that can be reconfigured between the 2.4 GHz and 5 GHz bands, in order to satisfy "bandwidth demand." Yen at 4:23-34 ("Referring to FIG. 3, in Mode I, the RF transceiving circuits 11 and 12 both operate in the 5 GHz frequency band."), 4:30-32 ("In Mode II, the RF transceiving circuits 11 and 12 operate in the 5 GHz and 2.4 GHz frequency bands, respectively."), 4:57-61 ("[T]he wireless transceiver 10 is configured to switch among the four operational modes according to the bandwidth demand for each of the first frequency band and the second frequency band, which depends on the wireless service required by a subscriber.").

In addition, most if not all of the charted references disclose connecting two or three actual MAC interfaces connected to a wireless networking device's processing interface, with each of those actual MAC interfaces connected to a separate actual PHY interface. They also disclose that each of those actual PHY interfaces is connected to a wireless transceiver, and that each of those transceivers has a bandwidth availability up to an actual bandwidth and uses a frequency, such that at least one transceiver uses a frequency that is different from the frequency used by another transceiver and wherein the frequences are set forth in a pre-October 30, 2013 IEEE 802.11 family standard. This is explained in the respective charts, and is further evidence of what was well within the state of the art at the time.

It would have been a routine application of common sense for a POSITA to augment the wireless networking device of any of the charted reference to use actual MAC interfaces, actual PHY interfaces, and wireless transceivers as claimed in the limitations discussed in this section if the charted reference does not itself disclose as much. As explained, these were standard (and sometimes mandated) features of wireless networking devices, routinely implemented using off the shelf components and widely available. Adding additional transceivers (that used a second or a third frequency) to a wireless networking device tended to increase the bandwidth available to that device, improve availability by providing alternatives in case of frequency conflicts, and provide a platform for additional security, usability, and performance features. A POSITA would know that adding those transceivers (and the associated MAC/PHY pairs) in a manner consistent with promulgated or emerging standards would tend to improve interoperability of the networking device with both network infrastructure and client devices and be likely to increase the availability and reduce the cost of components and implementation because of the expected industry-wide adoption of the standard.

For at least similar reasons, a POSITA would have been motivated to apply the transceiver and actual PHY / actual MAC teachings of the charted references to any of the references that do not have similar disclosures, and would have done so with a similarly reasonable expectation of success.

4. Processing Layer Features

All Asserted Claims recite a ***virtual MAC interface*** and either (1) two or more ***virtual PHY interfaces*** or (in the more recently filed of the Asserted Patents) (2) at least one ***resource monitoring interface***. The claimed ***resource monitoring interface*** of the more recently filed patents would be understood to encompass and therefore broaden the previously claimed ***virtual PHY interfaces*** of the earlier patents. Dependent claims of the Asserted Patents recite a variety

of additional limitations in connection with these elements, but as discussed below and as would have been understood by POSITA, these constraints are all relevantly similar in purpose and nature. See the below table, where relevantly similar language is consistently highlighted.

’591[1e] ’591[1f]	“wherein the processing interface comprises (i) at least one virtual MAC interface” and “(ii) first, second, and third virtual PHY interfaces that, during operation of the wireless networking device, feed information regarding the bandwidth availabilities of the first, second, and third wireless transceivers back to the at least one virtual MAC interface”
’591[20]	“wherein the virtual MAC interface includes a decision block”
’591[21]	“wherein the virtual MAC interface includes a processing block”
’591[22]	“wherein the virtual MAC interface includes an ultra-streaming block”
’591[26]	“wherein the processing interface includes a bandwidth allocator”
’337[1e] ’337[1f]	“forming in the processing interface (i) at least one virtual MAC interface” and “(ii) first and second virtual PHY interfaces that, during operation of the wireless networking device, feed information regarding the bandwidth availabilities of the first and second wireless transceivers back to the at least one virtual MAC interface”
’337[19]	’591[20]
’337[20]	’591[21]
’337[21]	’591[22]
’337[22]	“wherein each of the virtual PHY interfaces includes an RF block”
’337[30]	’591[26]
’414[1e]	’337[1e]
’414[1f]	’337[1f]
’414[18]	’591[20]
’414[19]	’591[21]
’414[20]	’591[22]
’414[21]	’337[22] (recites “each one of” instead of “each of”)
’414[30]	’591[26]
’143[1e]	’337[1e]
’143[1f]	“(ii) first, second and third virtual PHY interfaces that, during operation of the wireless networking device, feed information regarding the bandwidth availabilities of the first, second and third wireless transceivers back to the at least one virtual MAC interface;
’143[5]	“wherein the first virtual PHY interface includes an RF block”
’143[6]	“wherein the second virtual PHY interface includes an RF block”
’143[7]	“wherein the third virtual PHY interface includes an RF block”
’143[8]	’591[20]
’143[9]	’591[21]
’143[10]	’591[22]
’143[12]	’591[26]
’105[1e]	’337[1e]
’105[1f]	’337[1f]
’105[4]	“wherein the at least one virtual MAC interface includes a decision block”
’105[5]	“wherein the at least one virtual MAC interface includes a processing block”

’105[6] ’105[7] ’105[8] ’105[10]	“wherein the at least one virtual MAC interface includes an ultra-streaming block” ’143[5] ’143[6] ’591[26]
’976[1e] ’976[1f] ’976[4] ’976[5] ’976[6] ’976[7] ’976[8] ’976[10]	“at least one virtual MAC interface” “first and second virtual PHY interfaces formed in the processing interface that, during operation of the wireless networking device, feed information regarding the bandwidth availabilities of the first and second wireless transceivers back to the at least one virtual MAC interface” ’105[4] ’105[5] ’105[6] ’143[5] ’143[6] ’591[26]
’933[1e] ’933[1f] ’933[4] ’933[5] ’933[6] ’933[7] ’933[8] ’933[10]	’337[1e] ’337[1f] (adding “after the circuitry has been connected to the application interface”) ’105[4] ’105[5] ’105[6] ’143[5] ’143[6] ’591[26]
’177[1e] ’177[1f] ’177[4] ’177[5] ’177[6] ’177[7] ’177[8] ’177[9] ’177[11]	’337[1e] “(ii) at least one resource monitoring interface that, after the circuitry has been connected to the application interface and during operation of the wireless networking device, feeds information regarding the bandwidth availabilities of the first, second and third wireless transceivers back to the at least one virtual MAC interface” ’105[4] ’105[5] ’105[6] “wherein the resource monitoring interface includes an RF block” “wherein the resource monitoring interface include first, second and third RF blocks” “wherein the processing interface comprises multiple resource monitoring interfaces” ’591[26]
’756[1e] ’756[1f] ’756[4] ’756[5] ’756[6] ’756[7] ’756[8] ’756[10] ’756[12]	“wherein the processing interface comprises, at least one virtual MAC interface” “at least one resource monitoring interface that, during operation of the wireless networking device, provides information regarding the first and second bandwidth availabilities to the virtual MAC interface, and” ’105[4] ’105[5] ’105[6] “wherein the resource monitoring interface comprises at least one RF block” “wherein the resource monitoring interface comprises multiple RF blocks” ’177[9] ’591[26] (recites “comprises” instead of “includes”)

’756[15] ’756[16]	“wherein the information provided by the resource monitoring interface to the virtual MAC interface is received by the resource monitoring interface directly from at least one of the first and second actual PHY interfaces” “wherein the information provided by the resource monitoring interface to the virtual MAC interface is received by the resource monitoring interface directly from at least one of the first and second actual MAC interfaces”
’198[1e] ’198[1f] ’198[4] ’198[5] ’198[6] ’198[7] ’198[8] ’198[10] ’198[12] ’198[15] ’198[16]	’756[1e] ’756[1f] (“after the circuitry has been connected to the wireless networking device”) ’105[4] ’105[5] ’105[6] ’756[7] ’756[8] ’177[9] ’591[26] ’756[15] ’756[16]
’564[1e] ’564[1f] ’564[4] ’564[5] ’564[6] ’564[7] ’564[8] ’564[10]	’976[1e] “at least one resource monitoring interface formed in the processing interface that, during operation of the wireless networking device, feeds information regarding the bandwidth availabilities of the first and second wireless transceivers back to the at least one virtual MAC interface” ’105[4] ’105[5] ’105[6] ’177[7] ’177[9] ’591[26]

A POSITA would have found it obvious to add a ***processing interface*** with ***virtual MAC interfaces*** and ***virtual PHY interfaces*** or ***resource monitoring interfaces***) to the wireless networking device of any of the charted references that does itself disclose that the device has such interfaces. *See, e.g.,* Lou at 4:51-64 (“A multi-band capable device may support multiple MAC sublayers. The multi-band capable device may be coordinated by ***a multiple MAC station management entity (MM-SME)***. A multi-band management entity may be defined in the SME and may be responsible for the operations and/or functions of fast session transfer (FST).”), at

6:62-65 ("The multiband management sublayer may be located in the upper MAC. The upper MAC may be in charge of the coordination of one or more MAC sublayers."), Figure 1-3.

As disclosed elsewhere in these cover pleadings, charts, and cited references, at the time of alleged invention a POSITA would have known or found it obvious to include multiple transceivers, with corresponding actual MACs and actual PHYs, in a single networking device. Given such a wireless networking device, a POSITA would have found it obvious to add a processing interface that interacted with virtual interfaces having the functional subcomponents of the Asserted Claims.

Common sense and the state of the art would motivate a POSITA to do so. For example, the wireless network device providing an interface for the applications to take advantage of the device's communication resources means that individual applications do not have to be aware of the underlying components of the wireless networking device. It also allows the wireless networking device to be improved or even replaced, without requiring the application to be re-written. Similar motivations would have resulted in a POSITA abstracting the actual MAC and actual PHY layers of the wireless networking device behind virtual MACs and virtual PHYs. Because applications and other components of a wireless networking stack (as well as those who developed and designed those applications and components) were accustomed to working with a MACs and PHYs, it made common sense to expose enhanced functionality that leveraged the improved communication capabilities of these devices as virtual MACs and virtual PHYs. Years of experience with virtualization and abstractions and the familiar functionality of PHY and MAC layers (whether actual or virtual), would have given a POSITA a reasonable expectation of success.

It was also obvious to a POSITA to implement the virtual PHY with a component that has information about "actual resource availability" (the only disclosed function of the RF block)

because ultimately a virtual layer must have information about the underlying actual capabilities so that the requests of the virtual layer's clients can eventually be actually performed. The routine nature of the "RF block" would have given a POSITA a reasonable expectation of success.

Virtual PHYs or resource monitoring interfaces that may include the RF block for resource monitoring and allocation and reside in a virtual PHY layer that sits between a virtual MAC layer and actual MAC and PHY layers were disclosed in, for example, for example, U.S. Patent No. 8,369,349 and its related application U.S. Patent Application Publication No. 2011/0320625 (Riggert); U.S. Patent Application Publication No. 2013/0182601 (Bandyopadhyay); U.S. Patent No. 7,539,175 (White); U.S. Patent Application Publication No. 2009/0141691 (Jain); U.S. Patent No. 8,483,236 (Moratt); U.S. Patent Application Publication No. 2011/0128919 (Kim); U.S. Patent No. 10,321,484 ("Lou") at Figures 1-3. For example, Riggert discloses "bondable virtual interfaces," which are "instantiated by the software library based on the information communicated by the traffic monitor" ('349 Patent at 11:9-10) and "logical virtual interfaces," which is "an abstraction of a physical interface" (*Id.* at 11:6-7). "A bondable virtual interface is a clustering of two or more logical physical interfaces as a bondable object that aggregates available bandwidth with a single thread to manage a common buffer memory." *Id.* at 12-15. Similarly, Bandyopadhyay discloses "creating a virtual physical interface for encapsulating at least one existing physical interface" (claim 1(a)). Jain discloses that, "[d]epending upon the selected mode of operation, the access point PHY may be configured to function as two or more virtual PHYs wherein each virtual PHY supports data streams for different standards. The selection of the PHY operating modes may be made dynamically by the user or access point during operation in one embodiment, such as selecting channel modes based upon channel quality and client or application demand." Jain at [0037]. White, for example, discloses a monitoring daemon, which "is a

resource-monitoring daemon, responsible for gathering measurements for all network interfaces." White at 13:34-36. These measurements "could include connection availability, packet error rate, Mean Time To Recovery (MTTR, the average time for a hardware or software interface to recover from a non-terminal failure), congestion, latency, Round Trip Time (RTT), signal quality, and various statistics about usage." White at 13:38-42. Similarly, Kim discloses "a scheduler [to] allocate[] transmission resources by considering the amount of resources to be transmitted, the channel states, the amount of data, and the like." Jain at [0005]. This is further evidence of the state of the art and the knowledge that a POSITA would have applied to the charted references, and for the reasons set forth herein a POSITA would also have been motivated to combine the relevant teaching of any or all of these references with any of the charted references.

It was similarly obvious to a POSITA to implement the virtual MAC layer with components or blocks that correspond to the claimed ***decision block***, ***processing block***, and ***ultra-streaming block***. The specified functionality of these blocks corresponds to functionality normally or logically performed within the MAC layer and sensibly encapsulated within a virtual MAC layer. Moreover, a POSITA would have decomposed that functionality into separate conceptual blocks in a similar fashion: one block to evaluate inbound data streams (like the claimed ***decision block***), one block to actually process the inbound data at a logical level (like the claimed ***processing block***), and one block to further process the data in preparation for routing it to the PHY layer for communication (like the claimed ***ultra-streaming block***). Functional decomposition is a routine task in technology architecture, and this particular decomposition is particularly standard, giving a POSITA a reasonable expectation of success.

It would also have been obvious to a POSITA to include multiple virtual PHY interfaces or multiple RF blocks within a resource monitoring interface. As explained by the common

specification and the references cited herein, a POSITA would have been motivated to address the multitude of demands on a wireless networking device by efficiently allocating the available bandwidth and frequency bands provided by the device's various transceivers. Given that networking technologies and standards that were well known at the time, a POSITA would have known that parallel or simultaneous use of the available communication resources was possible and desirable, and that simultaneous use of those resources my multiple applications was also possible and desirable. A POSITA would also have understood that in the context of the above-described obvious architecture, and a design to allow this would include multiple virtual PHY interfaces (or, analogously, multiple RF blocks, because the RF block is the only identified component of the virtual PHY layer).

Some asserted claims recite "wherein the information provided by the resource monitoring interface to the virtual MAC interface is received by the resource monitoring interface directly from at least one of the first and second [actual PHY or actual MAC] interfaces." In this regard, the common specification discloses that in some embodiments, "the virtual PHY RF block may directly communicate with the virtual MAC decision block and/or the processing block." '591 patent at 4:42-44. This type of communication between virtual interfaces for the purpose of monitoring and feeding back information regarding wireless communication resources was well known to POSITAs prior to October 30, 2013. It was part of the state of the art and is disclosed by many of the charted references and other references cited herein. The information provided by the resource monitoring interface is "information regarding the first and second bandwidth availabilities" of transceivers. See, e.g., '756 patent claim 1. Two of the most reasonable places from which the resource monitoring interface could source that information are the actual MAC and actual PHY associated with the transceivers, Thus, to the extent a charted reference does not

discloses these features, a POSITA would have found it obvious, either in view of the state of the art or in view of any of the references (charted or disclosed herein) that does disclose these features, to add these features to that charted reference's wireless networking device.

The contentions above are further corroborated by the cited references charted in the exhibits to these invalidity contentions, and the charted references themselves contain additional motivations to combine and provide further evidence that a POSITA would have had a reasonable expectation of success in applying these common sense features to wireless networking devices that did not have them.

Many of the charted references do explicitly disclose these limitations. For at least the reasons set forth above, a POSITA would been motivated to combine the flexible, familiar, and logical virtual architecture as taught by any one of the charted references with a the wireless networking device of a reference that does not teach such an architecture or teaches only part of it. And for at least the reasons set forth above, a POSITA would have had a reasonable expectation of success in doing so.

5. Transparency and Associations

All Asserted Claims recite that the ***processing interface*** performs the claimed operations "in a manner transparent to any layer of the wireless networking device above the processing interface"—with the exception of the asserted claims of the '756 and '198 patents, which also recite that the ***virtual MAC interface*** operates in that manner. All Asserted Claims, except those of the '337 patent, require that the ***processing interface*** (the ***virtual MAC interface*** for the '756 and '198 patents) request or create associations between a single "recipient" and the actual MAC/PHY interfaces. On the other hand, all Asserted Patents except the '591, '756, and '198 patents contain at least some asserted claims that require the ***processing interface*** to perform certain claimed operations "without requiring" the recipient to "disassociate" from a

transceiver's actual MAC or actual PHY. Finally, all of the Asserted Claims except those of the '756 and '198 patents require that the wireless networking device's use of the its transceivers' bandwidth "does not prevent" other wireless networking devices "from utilizing a range of frequencies corresponding to the remaining portion of the bandwidth availability of" those transceivers. See the below table, where relevantly similar language is consistently highlighted.

'591[1g], [10b] '591[1h] '591[1l]	"… the processing interface is configured to… in a manner transparent to any layer of the wireless networking device above the processing interface…" "(a) request or create (i) a first association between a recipient and the first actual MAC and PHY interfaces, (ii) a second association between the recipient and the second actual MAC and PHY interfaces and (iii) a third association between the recipient and the third actual MAC and PHY interfaces" "[using available bandwidth of wireless transceivers as claimed] does not prevent other wireless networking devices [or, "any wireless networking device"] from utilizing a range of frequencies corresponding to the remaining portion of the bandwidth availability of [those wireless transceivers at the same time data is being sent using those transceivers as claimed]"
'337[1g], [1l], [2b] '337[1n], [1o] '337[1p]	'591[1g] "…without requiring the disassociation of the recipient from the actual MAC and PHY interfaces of any wireless transceiver…" '591[1l]
'414[1g], [2b] '414[1h] '414[3b] '414[3c] '414[4b] '414[4c] '414[1l]	'591[1g] '591[1h] (but without the "third association…" of '591[1h]) "…without requiring the disassociation of the recipient from the actual MAC and PHY interfaces associated with any wireless transceiver…" "…without requiring the disassociation of the recipient from the actual MAC and PHY interfaces of any wireless transceiver…" '414[3b] '414[3c] '591[1l]

’143[g], 3[1l] ’143[1h] ’143[19b] ’143[19c] ’143[20b] ’143[1p], [1q]	’591[1g] “(i) respectively request or create first, second and third associations between a first recipient and the first, second and third actual MAC and PHY interfaces” “…without requiring the disassociation of the recipient from the actual MAC and PHY interfaces associated with any wireless transceiver…” “…without requiring the disassociation of the recipient from the actual MAC and PHY interfaces of any wireless transceiver…” ’591[1l]
’105[1g], [14a], [16a], [17a], [18a], [19a], [21], [22] ’105[1h] ’105[1k], [16d], [17d], [18d], [19c], [19d] ’105[1l] ’105[18d]	’591[1g] ’591[1h] (but without the “third association…” of ’591[1h]) “…without requiring disassociation of the recipient from either or both of the first and second actual MAC and PHY interfaces…” ’591[1l] ’591[1l]
’976[1g], [14a], [16a], [17a], [18a], [19a], [21], [23], [25a], [29a], [30a] ’976[1h] ’976[1k], [14d], [16d], [17d], [18d], [19c], [19d], [25d], [25[e], [29d], [30d] ’976[1l], [18e], [25f]	’591[1g] ’591[1h] (but without the “third association…” of ’591[1h]) “…without requiring disassociation of the recipient from either or both of the first and second actual MAC and PHY interfaces…” “…without requiring disassociation of either or both of the first and second associations…” ’591[1l]

’933[1g], [14a], [16a], [17a], [18a], [19a], [21], [23], [25a], [29a], [30a]	’591[1g]
’933[1h]	’591[1h] (but without the “third association…” of ’591[1h])
’933[1k], [14d], [16d], [17d], [18d], [19c], [19d], [25d], [25[e], [29d], [30d]	“…without requiring disassociation of the recipient from either or both of the first and second actual MAC and PHY interfaces…”
’933[1l], [18e], [25f]	’591[1l]
’177[1g], [14], [17], [20a]	’591[1g]
’177[1h]	’591[1h]
’177[1k], [1n], [20d]	“…without requiring disassociation of the recipient from either or both of the first, second and third actual MAC and PHY interfaces…”
’177[o], [p]	’591[1l]
’756[1g]	“… the virtual MAC interface being configured to… in a manner transparent to any layer of the wireless networking device above the processing interface…”
’756[18], [19], [25], [26]	’591[1g]
’756[1h]	591[1h] (but without the “third association…” of ’591[1h])
’198[1g]	’756[1g]
’198[18], [19], [25], [26]	’591[1g]
’198[1h]	’591[1h] (but without the “third association…” of ’591[1h])
’564[1g], [15], [16a], [18a], [20a], [22a], [26], [28]	’591[1g]

’564[1h]	’591[1h] (but without the “third association…” of ’591[1h])
’564[1k], [1l], [16d], [16e], [22c], [22d]	“…without requiring disassociation of the recipient from either or both of the first and second actual MAC and PHY interfaces…”
’564[1m], [16f], [18d], [20d], [22e]	’591[1l]

A POSITA would have found it obvious to make the relevant operations of the processing interface (or virtual MAC interface) transparent to the layers above the processing interface, such as the application layer. At the relevant time, “transparent” interfaces were known to a POSITA. A POSITA would have been motivated to make operation of the processing interface (and the virtual MAC interface within that processing interface) transparent to the application layer for reasons similar to those referenced above in the context of creating the processing interface to begin with. Making the operations transparent would allow them to be changed and improved without requiring modifications to applications. It would also increase the value of the wireless networking device by making it compatible with existing applications. And transparency is consistent with one of the very purposes of having distinct network layers in the first place: logically distinct functionality can be implemented and modified without requiring changes to other functionality.

A WLAN device using a MAC management entity operating transparently was disclosed in, for example, U.S. Patent No. 10,321,484 (“Lou”) at 4:51-64 (“A multi-band capable device may support multiple MAC sublayers. The multi-band capable device may be coordinated by a multiple MAC station management entity (MM-SME). A multi-band management entity may be defined in the SME and may be responsible for the operations and/or functions of fast session transfer (FST). There may be two FST modes defined in IEEE 802.11ad, e.g., transparent FST

and/or non-transparent FST. With transparent FST, the multi-band capable device may use the same media access control (MAC) address on multi-bands. For example, the source and the destination MAC addresses (e.g., in both the old and the new frequency bands) may be the same. With non-transparent FST, one or more bands in the device may utilize one or more MAC addresses."), Figures 1-3.

A POSITA would have been motivated to apply common sense to modify any of the charted references in view of the state of the art so that the reference's processing interface (or virtual MAC interface) operated transparently—and would have done so with a reasonable expectation of success. A POSITA would also have been motivated to combine transparency as taught by any of the charted references with the wireless networking device of any charted reference that does not itself teach such transparency. This is for the reasons previously cited above, in the charts, and in the charted references, including that the charted references are all directed to wireless networking devices that operate in the closely related domain of 802.11 networking, and a POSITA would have known that a feature disclosed with respect to one such device is likely both useful and readily implementable in another such device.

In wireless communication systems, it is essential that there be some association between a "recipient" and the actual PHY and actual MAC of a transceiver, because ultimately data must actually be sent to the recipient. For the very reasons that a POSITA would have found it obvious to augment a wireless networking device with a processing interface and with transparency, a POSITA would have known that the association between the recipient and the actual MAC/PHY pairs should be created (or at least requested) by the processing interface. Were it otherwise, the recipient would have to be intimately familiar with the resource management operations of the processing interface, but those very operations are preferably implemented without the awareness

of the recipient, as discussed above. Just as a POSITA would have a reasonable expectation of success in implementing the virtual MAC, virtual PHY, and other elements of the processing interface, a POSITA would have a reasonable expectation of success in implementing this routine aspect of such an architecture.

Again, and for the reasons set forth above with respect to transparency (of which this is a sub-feature), a POSITA would also have been motivated to combine this feature as taught by any of the charted references with the wireless networking device of any charted reference that does not disclose it, and a POSITA would have done so with a reasonable expectation of success.

The negative limitation that the wireless networking device should perform some operations "without requiring" disassociation of a recipient from a transceiver's actual MAC and actual PHY was also within the state of the art at the time of alleged invention. Indeed, a POSITA would have no reason to always require a disassociation from a transceiver that is actively being used by a recipient. Also, a POSITA concerned about dynamically adapting the wireless networking device to make improved use of the communication resources would have known that even an association not in active use at one point in time might be put to use soon, such that it would be deleterious to disassociate a recipient from a transceiver with which it was associated. Maintaining previously established associations would not materially negatively impact the wireless networking device, and a POSITA would have a reasonable expectation of success in not forcing or requiring disassociation. To the extent a POSITA would not have found it obvious based on common sense in view of the state of the art, a POSITA would also have been motivated to not require disassociations as taught by any of the charted references that disclose this negative feature with the wireless networking device of any charted reference that does not disclose it, and a POSITA would have done so with a reasonable expectation of success.

Moreover, performing network operations, including transmitting data to a recipient without requiring disassociation of the recipient from any previously connected MAC or PHY interfaces, was disclosed in, for example, U.S. Patent No. 8,355,358 ("Bajic"), U.S. Patent No. 8,223,721 ("Berglund"), U.S. Patent No. 9,596,169 ("Choudhury"), U.S. Patent No. U.S. Patent No. 8,451,735 ("Li"), U.S. Patent No. 7,706,326 ("Marinier"), U.S. Patent No. 8,880,104 ("Meylan"), U.S. Patent No. 8,165,091 ("Nix"), U.S. Patent No. 8,140,076 ("Ponce De Leon"), U.S. Patent App. No. 2006/0126577 ("Yano"), U.S. Patent 9,379,868 ("Wang"), Akin et al. ("Robust Security Network (RSN) Fast BSS Transition (FT)," *Certified Wireless Network Professional*. 2008.), Condeixa et al. ("Make-Without-Break Horizontal IP Handovers for Distributed Mobility Management Schemes," *2013 IEEE Globecom Workshops (GC Wkshps)*. 2013.), Mouton et al. ("On the Evaluation of Make-Before-Break Handovers in Urban WiFi Networks for Moving Vehicles," *2013 10th Annual Conference on Wireless On-demand Network Systems and Services (WONS)*. 2013.), Pack et al. ("Fast-handoff support in IEEE 802.11 wireless networks," *9-1 IEEE Communications Surveys & Tutorials 2.* 2007.), and Ramachandran et al. ("Make-Before-Break MAC Layer Handoff in 802.11 Wireless Networks," *2006 IEEE International Conference on Communications.* 2006.). For example, Ponce De Leon identifies a problem with "long latency period associated with… handoff," which may "prevent running of certain applications and interrupt data transfer between the wireless device and the network." Ponce De Leon at 1:36-40. To address this, Ponce De Leon discloses a method facilitating fast handoff by monitoring current mobile station parameters and comparing them against historical and measured parameter data of target base stations. *Id.* at 6:24-50. Only when the measured signal quality meets a predefined threshold is a handoff procedure initiated. *Id.* at 7:6-50. This enables a seamless handoff wherein data can be transmitted without requiring disassociation of the recipient

from previous base stations. Further, Wang recognizes that requiring disassociation of a terminal before re-association is "undesirable, can be blunt and can disrupt the on-going services." Wang at 24:42-43. Thus, Wang describes techniques in a multiple transceiver/MIMO system for effectuating an update to a recipient's unique association identifier ("AID") through various interactions with the system without requiring a disassociation of a wireless device from an access point. Wang at 24:63-25:57. This is further evidence of the state of the art and the knowledge a POSITA would have applied to the charted references, and for the reasons set forth herein a POSITA would also have been motivated to combine the relevant teaching of any or all of these references with any of the charted references.

Using a portion of a transceiver's bandwidth while not preventing other wireless networking devices from using frequencies "corresponding to the remaining portion of the bandwidth" of those transceivers was also obvious at the time of invention. A POSITA would have known, for example, that the different channels supported by a transceiver can be simultaneously used. That was one of the very purposes the industry subdivided frequency bands into discrete channels. For all the reasons set forth above, a POSITA would also have been motivated to add this feature, as taught by any of the charted references that disclose it, to the wireless networking device of any charted reference that does not disclose it. A POSITA would have done so with a reasonable expectation of success because of the standard nature of this feature and because of its successful implementation as documented in the charted prior art.

6. Identifying And Using Available Bandwidth or Network Resources

All Asserted Claims recite that the wireless networking device uses information about available bandwidth for one or more wireless transceivers (example limitations highlighted below in yellow) and eventually allocate network resources to at least partially satisfy the bandwidth requirements of (a) one or more applications that are transmitting data and/or (b) one

or more data streams that the wireless networking device is receiving from a recipient [sic] (example limitations highlighted below in light blue).

Some Asserted Claims require that the identified network resources include portion of bandwidth that form a "single portion," are "contiguous," or both, as highlighted in green below. On the other hand, some of the Asserted Patents include claims that require the wireless networking device to identify bandwidth portions that are **not** contiguous, as highlighted in orange.

'591[1i], [10c]	"identify at least one portion of each one of the first, second, and third bandwidths of the first, second, and third wireless transceivers that are available for communication"
'591[1k]	"wherein, if… preparing the first data stream for simultaneous transmission to the recipient… and causing the prepared first data to be transmitted… to thereby at least partially satisfy the first wireless bandwidth requirement of the first application"
[10e]	"wherein if … preparing the first and second data streams for simultaneous transmission to the recipient… and causing the prepared first and second data streams to be transmitted… to thereby at least partially satisfy the first and second wireless bandwidth requirements of the first and second applications"
'591[13], [15], [17]	"wherein the at least one portion of the [first/second/third] bandwidth of the [first/second/third] transceiver comprises a single portion"
'591[14], [16], [18]	"wherein the at least one portion of the [first/second/third] bandwidth of the [first/second/third] transceiver is contiguous"
'337[1h]	"identify at least one portion of each one of the first and second actual bandwidths of the first and second wireless transceivers that are available for communication"
'337[23], [25]	"wherein the at least one portion of the [first/second] bandwidth of the [first/second] transceiver comprises a single portion"
'337 [24], [26]	"wherein the at least one portion of the [first/second] bandwidth of the [first/second] transceiver is contiguous"
'337[1j]; [1k]	"prepare the first data stream for transmission to a recipient …"; "cause the prepared first data stream to be transmitted… to thereby at least partially satisfy the first wireless bandwidth requirement of the first application"
'337[1n], [1o]	"prepare the first data stream… for transmission to the recipient …; "cause the prepared first data stream to be transmitted to the recipient … to thereby continue to at least partially satisfy the first wireless bandwidth requirement of the first application"

’414[1i]	“identify at least one portion of each one of the first and second bandwidth availabilities of the first and second wireless transceivers”
’414[1k]	“wherein, if … preparing the first data stream for simultaneous transmission to the recipient… and causing the prepared first data stream to be transmitted… to thereby at least partially satisfy the first wireless bandwidth requirement of the first application”
’414[23], [25] ’414[24], [26]	’337[23], [25] ’337[24], [26]
’143[1i]	“identify at least a portion of bandwidth available for communication of a first selected wireless transceiver of the first, second and third wireless transceivers”
’143[1m]	“identify at least a portion of bandwidth available for communication of a second selected wireless transceiver of the first, second and third wireless transceivers to receive a data stream transmitted from a second recipient”
’143[1j], [1k]	“prepare the first data stream for transmission… ; “cause the prepared first data stream to be transmitted… to thereby at least partially satisfy the first wireless bandwidth requirement of the first application”
’143[19b], [19c]	“prepare the first data stream… for transmission …”; “cause the prepared first data stream to be transmitted … to thereby continue to at least partially satisfy the first and second wireless bandwidth requirements of the first and second applications.
’143[1n]	“receive the data stream transmitted to the wireless networking device from the second recipient… utilizing a specific subset of frequencies corresponding to the identified portion of the bandwidth available for communication of the second selected wireless transceiver”
’143[20b]	“receive the data stream transmitted by the second recipient… to thereby continue to at least partially satisfy a bandwidth requirement associated with the data stream transmitted by the recipient to the wireless networking device”
’143[13], [15]	“wherein the portion of the bandwidth available for communication of the [first/second] selected wireless transceiver comprises a single portion”
’143[14], [16]	“wherein the portion of the bandwidth available for communication of the [first/second] selected wireless transceiver is contiguous”
’105[1i]	“identify at least one first portion of the first actual bandwidth of the first wireless transceiver, the identified at least one first portion comprising a set of given resources”
’105[1k], [14d], [16d], [17d], [18d], [19c], [19d]	“… transmit the first data stream to the recipient… to thereby at least partially satisfy the first wireless bandwidth requirement of the first application”
’105[14b]	[1]: “… the first and second identified actual bandwidth portions not being contiguous with each other”

’105[11], [15]	[1], [14]: “wherein the [first/second] identified actual bandwidth portion is contiguous”
’976[1i] ’976[1k], [14d], [16d], [17d], [18d], [19c], [19d] ’976[25e] ’976[30d] ’976[14b] ’976[11], [15]	’105[1i] “… transmit the first data stream to the recipient, … to thereby at least partially satisfy the first wireless bandwidth requirement of the first application” “… use the second wireless transceiver to receive a second data stream from the recipient… to thereby at least partially satisfy a second wireless bandwidth requirement associated with the second data stream” “… use the second wireless transceiver to receive the second data stream from the recipient… to thereby at least partially satisfy the first wireless bandwidth requirement of the second application” ’105[14b] ’105[11], [15]
’933[1i] ’933[1k], [14d], [16d], [17d], [18d], [19c], [19d] ’933[25e] ’933[30d] ’933[14b] ’933[11], [15]	’105[1i] “… transmit the first data stream to the recipient, … to thereby at least partially satisfy the first wireless bandwidth requirement of the first application” “… use the second wireless transceiver to receive a second data stream from the recipient… to thereby at least partially satisfy a second wireless bandwidth requirement associated with the second data stream” “… use the second wireless transceiver to receive the second data stream from the recipient… to thereby at least partially satisfy the first wireless bandwidth requirement of the second application” ’105[14b] ’105[11], [15]
’177[1i] [1l] ’177[1n] ’177[1k], [20d] ’177[12] [16], [19]	’105[1i] “identify at least one first portion of the second actual bandwidth of the second wireless transceiver, the identified at least one first portion of the second actual bandwidth of the second wireless transceiver comprising a set of given resources” “… use the second wireless transceiver to receive a second data stream from the recipient… to thereby at least partially satisfy a wireless bandwidth requirement associated with the second data stream” “use the first wireless transceiver to transmit the first data stream to the recipient … to thereby at least partially satisfy the first wireless bandwidth requirement of the first application” [1]: “wherein the first identified actual bandwidth portion is contiguous” [14], [17]: “wherein the identified first portion of the available bandwidth of the

	third wireless transceiver is contiguous”
’177[20b]	“identify at least one second portion of bandwidth available for communication of the first wireless transceiver, the identified at least one second portion of the first wireless transceiver comprising a set of given resources”
’177[21]	[20]: “wherein the first and second identified bandwidth portions of the first wireless transceiver are not contiguous”
’756[18]	[1]: “wherein the processing interface is configured to … identify at least one portion of the actual bandwidth of one of the first and second wireless transceivers, the identified bandwidth portion comprising a set of given resources…”
’756[1i]	“use the information provided to it by the resource monitoring interface to make allocation decisions with respect to first and second bandwidth availabilities to at least partially satisfy the bandwidth requirement of the data stream”
’756[18]	[1]: “… transmit the data stream to the recipient … to thereby at least partially satisfy the bandwidth requirement”
’756[22], [23]	[18]/[22]: “wherein the first identified bandwidth portion of the first wireless transceiver comprises two non-contiguous portions of the bandwidth of the [first/second] wireless transceiver”
’198[18]	’756[18]
’198[1i]	“use the information provided to it by the resource monitoring interface to make allocation decisions with respect to first and second bandwidth availabilities to at least partially satisfy the bandwidth requirement of the data stream”
’198[18]	[1]: “… transmit the data stream to the recipient … to thereby at least partially satisfy the bandwidth requirement”
’198[22], [23]	’756[22], [23]
’564[1i]	“identify at least one first and second portions of the first actual bandwidth of the first wireless transceiver, each one of the first and second identified bandwidth portions each having a set of given resources”
[16b], [18b], [20b], [22b]	“identify at least one first portion of the second actual bandwidth of the second wireless transceiver, [wherein] the first identified bandwidth portion of the second wireless transceiver comprising a set of given resources”
’564[1k], [1l], [16d], [22c]	“… use the first wireless transceiver to transmit the first data stream to the recipient … to thereby at least partially satisfy the first wireless bandwidth requirement of the first application”
[16e]	“…use the second wireless transceiver to transmit the first data stream to the recipient… to thereby at least partially satisfy the first wireless bandwidth requirement of the first application”
[22d]	“… use the second wireless transceiver to receive a second data stream from the recipient… to thereby at least partially satisfy a second wireless bandwidth requirement associated with the second data stream”
’564[12]	[1]: “wherein the second identified actual bandwidth portion is contiguous”

To the extent there are charted references that do not disclose a wireless networking device that obtains information about its transceivers' available bandwidth and then routing traffic (either inbound or outbound) based on that information, it would have been obvious for a POSITA to add such functionality. Ascertaining bandwidth availability and conveying that availability to the relevant components of a wireless networking device was part of the state of the art at the time. This is evidenced by at least those charted references that expressly disclose this concept. A POSITA would have been motivated to add this functionality to the wireless networking device of any of the charted references for at least the reasons set forth above.

For example, with the advent multi-transceiver devices, is was both an efficient use of resources and a net performance benefit for multiple applications or recipients to share a transceiver's bandwidth or (and for similar reasons) a device's bandwidth. Serializing access to such resources would tend to leave bandwidth unused even as data streams that could use that bandwidth waited to be transmitted or received.

A POSITA also would have found it obvious to combine any of the charted references that teach this concept with any of the charted references that do not, again for at least the reasons already set forth. For example, Emmanuel '740 discloses at [0113] determining "whether there is a channel available with a minimum margin of improvement" and if there is, moving traffic to it. Karaoguz '196 has similar disclosures, including at, e.g., 9:48-10:3. Indeed, it is such a fundamental concept that dozens of charted references disclose it, and it would have been obvious for a POSITA to add that functionality as taught by any of those references to those that do not, and to do so with a reasonable expectation of success.

As for limitations relating to the available bandwidth forming a "single portion," being "contiguous," or not being "contiguous," all of these varieties were also known to a POSITA at

the time. A POSITA would have recognized that these were among the only options: that available bands form a single portions and be contiguous, or that they not be contiguous. Each would have had relative advantages and disadvantages, including in terms of interference, ease of implementation and management, and efficiency, but a POSITA would have tried all three, as appropriate to the particular problem being addressed and the other requirements of the wireless networking device. Certain charted references discuss these scenarios extensively, including Clegg '592 and Chincholi '859. For at least the reasons already set forth, a POSITA would have been motivated to combine the relevant disclosures of any charted reference that teaches this with any of the charted reference that does not, and would have done so with a reasonable expectation of success.

7. Evaluating Available Networking Resources

Many of the Asserted Claims recite that available bandwidth, transceivers, or other network resources are "evaluated" or that certain actions are taken "if" something is true of those resources. Examples of such limitations are highlighted in yellow, below. The nature of the evaluation is sometimes recited with further specificity, as illustrated by some example limitations highlighted below in light blue.

'591[1j]	"evaluate the identified bandwidth availabilities of the first, second, and third wireless transceivers with respect to the first bandwidth requirement of the first application;"
'591[1k]	"wherein, if the first bandwidth requirement is at least partially satisfied by the bandwidth availabilities of a selected two transceivers of the first, second, and third wireless transceivers…
'591[10d]	"evaluate the identified bandwidth availabilities of the first, second, and third wireless transceivers with respect to the first and second bandwidth requirements of the first and second applications"
'591[10e]	"wherein if the bandwidth requirements of the first and second applications are at least partially satisfied by the bandwidth availabilities of the selected transceivers of the first, second, and third wireless transceivers…"
'337[1i]	"select one transceiver of the first and second transceivers which has the most

	bandwidth available"
’337[1l]	"wherein, if the unselected wireless transceiver has more bandwidth availability than the selected transceiver during use of the wireless networking device…"
’414[1j]	"evaluate the identified bandwidth availabilities of the first and second wireless transceivers with respect to the first bandwidth requirement of the first application"
’414[1k]	"wherein, if the first bandwidth requirement is at least partially satisfied by the bandwidth availabilities of the first and second wireless transceivers,
’414[3a]	[2]: "wherein, if the identified at least one portion of the bandwidth of the first wireless transceiver becomes unavailable during use of the wireless networking device or if it has an unidentified portion of bandwidth availability that is greater than its identified at least one portion of bandwidth availability during use of the wireless networking device,
’414[4a]	[3]: "wherein, if the identified at least one portion of the bandwidth of the second wireless transceiver becomes unavailable during use of the wireless networking device or if it has an unidentified portion of bandwidth availability that is greater than its identified at least one portion of bandwidth availability during use of the wireless networking device…"
’143[19a]	[1]: "wherein, if the identified portion of the bandwidth of the first selected wireless transceiver becomes unavailable during use of the wireless networking device or if the first selected wireless transceiver has an unidentified portion of bandwidth availability that is greater than the identified portion of bandwidth availability of the first selected wireless transceiver during use of the wireless networking device…
’143[20a]	[19]: "wherein, if the identified portion of the bandwidth of the second selected wireless transceiver becomes unavailable during use of the wireless networking device or if the second selected wireless transceiver has an unidentified portion of bandwidth availability that is greater than the identified portion of bandwidth availability of the second selected wireless transceiver during use of the wireless networking device…"
’105[1j]	"evaluate whether any of the given resources of the first identified actual bandwidth portion are unavailable for communication"
’105[14c]	"evaluate whether any of the given resources of the second identified actual bandwidth portion are unavailable for communication"
’105[16b]	"if all of the given resources of the first identified bandwidth portion are unavailable…
’105[16c]	"evaluate whether any of the given resources of the third identified bandwidth portion are unavailable for communication"
’105[17b]	"if all of the given resources of the second actual bandwidth portion are unavailable…"
’105[17c]	"evaluate whether any of the given resources of the fourth identified bandwidth

	portion are unavailable for communication”
’105[18c]	“evaluate whether any of the given resources of the first identified actual bandwidth portion of the second wireless transceiver are unavailable for communication”
’105[18d]	“if none of the given resources of the first identified bandwidth portion of the first wireless transceiver are available for communication and if the first identified bandwidth portion of the second wireless transceiver is available for communication…”
’105[19b]	“if both the first identified actual bandwidth portions of the first and second wireless transceivers are available for communication, evaluate the data transfer characteristics of both”
’105[19c]	“if the data transfer characteristics of the first identified bandwidth portion of the first wireless transceiver are better than those of the first identified bandwidth portion of the second wireless transceiver…
’105[19d]	“if the data transfer characteristics of the first identified portion of the second wireless transceiver are better than those of the first identified bandwidth portion of the first wireless transceiver…
’105[20]	“wherein the data transfer characteristics are representative of one or more environmental conditions where the wireless networking device is used”
’976[1j]	’105[1j]
[14c]	’105[14c]
’976[16b] [16c]	’105[16b] ’105[16c]
’976[17b] [17c]	’105[17b] ’105[17c]
’976[18c] [18d]	’105[18c] ’105[18d]
’976[19b] [19c] [19d]	’105[19b] ’105[19c] ’105[19d]
’976[29c]	“evaluate whether any of the given resources of the at least one first and identified portions of the first wireless transceiver are not unavailable for communication”
’976[30c]	“evaluate whether any of the given resources of the at least one first and identified portions of the second wireless transceiver are not unavailable for communication”
’976[20]	’105[20]

’976[25c]	“evaluate whether any of the given resources of the at least one first identified portions of the first and second wireless transceivers are not unavailable for communication”
’933[1j] [14c] ’933[16b] [16c] ’933[17b] [17c] ’933[18c] [18d] ’933[19b] [19c] [19d] ’933[29c] ’933[30c] ’933[20] ’933[25c]	’105[1j] ’105[14c] ’105[16b] ’105[16c] ’105[17b] ’105[17c] ’105[18c] ’105[18d] ’105[19b] ’105[19c] ’105[19d] ’976[29c] ’976[30c] ’105[20] ’976[25c]
’177[1j] ’177[1m] ’177[20c]	“evaluate whether any of the given resources of the first identified actual bandwidth portion are unavailable for communication” “evaluate whether any of the given resources of the first identified actual bandwidth portion of the second wireless transceiver are unavailable for communication” “evaluate whether any of the given resources of the first and second identified bandwidth portions of the first wireless transceiver are not unavailable for communication”
’756[1i] ’756[19] ’756[20] ’756[21]	“use the information provided to it by the resource monitoring interface to make allocation decisions with respect to first and second bandwidth availabilities to at least partially satisfy the bandwidth requirement of the data stream” [18], “…evaluate at least one data transfer characteristic of a first identified bandwidth portion of each of the first and second wireless transceivers… [19], “wherein the evaluation of the at least one data transfer characteristic comprises evaluation of bandwidth unavailability” [20], “wherein the evaluation of the at least one data transfer characteristic comprises evaluation of bandwidth unavailability and received signal strength of at least one communication from the recipient”

’756[24]	[18], “wherein the allocation decisions are based at least upon a signal type associated with the data stream”
’198[1i] ’198[19] ’198[20] ’198[21] ’198[24]	’756[1i] ’756[19] ’756[20] ’756[21] ’756[24]
’564[1j] ’564[1k] ’564[1l] ’564[14] [16c] [16d] [16e] [17]	“evaluate the data transfer characteristics of the given resources of both the first and second identified bandwidth portions” “if the data transfer characteristics of the first identified bandwidth portion are better than those of the second identified bandwidth portion…” “if the data transfer characteristics of the second identified bandwidth portion are better than those of the first identified bandwidth portion…” [1], “wherein the data transfer characteristics of at least one of the first and second identified bandwidth portions of the first wireless transceiver are representative of one or more environmental conditions where the wireless networking device is used” [1], “evaluate data transfer characteristics of the given resources of the first identified bandwidth portion of the second wireless transceiver” [1], “if the data transfer characteristics of the first identified bandwidth portion of the first wireless transceiver are better than the data transfer characteristics of the first identified bandwidth portion of the second wireless transceiver …” [1], “if the data transfer characteristics of the first identified portion of the second wireless transceiver are better than the data transfer characteristics of the first identified bandwidth portion of the first wireless transceiver…” [16], “wherein the data transfer characteristics of at least one of the first identified bandwidth portion of the first wireless transceiver and the first identified bandwidth portion of the second wireless transceiver are representative of one or more environmental conditions where the wireless networking device is used”

The Asserted Patents do not purport to disclose novel properties of network resources or novel ways of evaluating them. At the time of alleged invention, a POSITA understood the concept of identifying and evaluating network resources, including the bandwidth associated with those resources. That this was well-established within the state of the art is confirmed by disclosure of this in numerous prior art references, including the charted references and others disclosed in these invalidity contentions.

A POSITA would have been motivated to improve the performance of a wireless networking device by adding features pertaining to evaluating bandwidth and network resources (as recited in these limitations) to such a wireless networking device for all the reasons set forth herein, and also at least because evaluating resources is a well-recognized pre-requisite to efficiently allocating and using them. For at least the same reasons, a POSITA would have been motivated to combine evaluation as disclosed by any of the charted referenced with the wireless networking device of any of the other charted references.

Some of the asserted claims recite that evaluating "data transfer characteristics" includes (1) evaluating conditions that are "representative" of "environmental conditions" around the wireless networking device, (2) evaluating "bandwidth unavailability," and/or (3) evaluating "received signal strength." Other asserted claims require that bandwidth allocation decisions be "based at least upon a signal type associated with the data stream" being transmitted.

As shown by the charted prior art references, these limitations are common sense in view of the state of the art. For example, a POSITA would have known that environmental conditions such as ambient temperature or the properties of surrounding physical structures can affect the performance of wireless networking devices, and may have different effects on signals with different power or different frequencies. A POSITA would also have known that bandwidth unavailability can be a useful metric, both in terms of a complete unavailability but also, for example, as an indicator of how much additional bandwidth is unavailable for future use. Signal strength is another metric that was well-know and well understood at the time, and a POSITA would have tried to use measured signal strength when improving a wireless networking device. Finally, a POSITA would have known that different data streams might be more synergistically transmitted or received by transceivers using a particular protocol or operating at a particular

frequency, might particularly benefit from being entirely transmitted by a single transceiver, or might be particular amenable to distribution over multiple transceivers.

Accordingly, and consistent with the motivations and expectations previously discussed, a POSITA would found it obvious in view of the state of the art to augment the wireless networking device of any charted reference with the above-discussed features. A POSITA would have been similarly motivated—with a similar expectation of success—to augment the wireless networking device of any charted reference with these features as taught by any of the other charted references, or as taught by any of the references discussed in the next two subsections.

8. Data Transfer Characteristics

Some of the Asserted Patents have claims about identifying and selecting bandwidth portions or transceivers based on data transfer characteristics, such as (without limitation):

’976[19]	The wireless networking device of claim 18, wherein the processing interface is configured to, when the wireless networking device is being used, . . . (a) if both the first identified actual bandwidth portions of the first and second wireless transceivers are available for communication, ***evaluate the data transfer characteristics of both***, (b) ***if the data transfer characteristics of the first identified bandwidth portion of the first wireless transceiver are better than those of the first identified bandwidth portion of the second wireless transceiver, use the first wireless transceiver*** to transmit the first data stream to the recipient, without requiring disassociation of the recipient from either or both of the first and second actual MAC and PHY interfaces, using a subset of frequencies corresponding to only the given resources of the first identified bandwidth portion of the first wireless transceiver that are not unavailable for communication to thereby at least partially satisfy the first wireless bandwidth requirement of the first application, and (c) ***if the data transfer characteristics of the first identified portion of the second wireless transceiver are better than those of the first identified bandwidth portion of the first wireless transceiver, use the second wireless transceiver*** to transmit the first data stream to the recipient, without requiring disassociation of the recipient from either or both of the first and second actual MAC and PHY interfaces, using a subset of frequencies corresponding to only the given resources of the first identified bandwidth portion of the second wireless transceiver that are not unavailable for communication to thereby at least partially satisfy the first wireless bandwidth requirement of the first application.

’564[1]	(b) ***identify at least one first and second portions of the first actual bandwidth*** of the first wireless transceiver, each one of the first and second identified bandwidth portions each having a set of given resources, (c) ***evaluate the data transfer characteristics of the given resources of both the first and second identified bandwidth portions***, (d) ***if the data transfer characteristics of the first identified bandwidth portion are better than those of the second identified bandwidth portion, use the first wireless transceiver to transmit the first data stream to the recipient***, without requiring disassociation of the recipient from either or both of the first and second actual MAC and PHY interfaces, ***using a subset of frequencies corresponding to only the given resources of the first identified bandwidth portion*** that are available for communication to thereby at least partially satisfy the first wireless bandwidth requirement of the first application, and (e) ***if the data transfer characteristics of the second identified bandwidth portion are better than those of the first identified bandwidth portion, use the first wireless transceiver to transmit the first data stream to the recipient***, without requiring disassociation of the recipient from either or both of the first and second actual MAC and PHY interfaces, ***using a subset of frequencies corresponding to only the given resources of the second identified bandwidth portion*** that are available for communication to thereby at least partially satisfy the first wireless bandwidth requirement of the first application, and

To the extent a charted reference does not explicitly disclose identifying and selecting bandwidth portions from a single transceiver based on data transfer characteristics or selectively choosing a transceiver based on data transfer characteristics, a POSITA would have found it obvious to deploy the charted reference in such a fashion based on the state of the art. Before the alleged priority date, it was already well known to identify and select bandwidth portions based on data transfer characteristics in wireless communications. *E.g.*:

- U.S. Patent No. 10,050,762 (“Mack”) at 1:57-62 (“Disclosed herein are methods, systems and apparatuses for performing channel quality measurements, selecting channels for carrier aggregation and allocating transmit power for carrier aggregation in a Dynamic Spectrum Management (DSM) system.”), 2:33-60 (e.g., “The DSM engine may select channels for carrier aggregation based on the channel quality measurements based on one or more channel quality thresholds. The DSM engine may compare the channel quality of an available channel to a low channel quality threshold, and may determine whether to add the channel to a candidate list associated with the DSM client based on the comparing. For example, the DSM engine may determine that the channel is excluded from the candidate list when the channel quality is below the low channel quality threshold. The DSM engine may compare the channel quality of a candidate channel (e.g., a channel on the candidate list) to a range extension threshold. For example, the

DSM engine may determine that the candidate channel is excluded from the active set associated with DSM client if the channel quality of the candidate channel is below the range extension threshold.”);

- U.S. Patent No. 2002/0188723 (“Choi 723”) at Abstract (“Disclosed is a method and system for dynamically selecting a communication channel between an access point (AP) and a plurality of stations (STAs) in an IEEE 802.11 wireless local area network (WLAN). The method includes the steps of: determining whether a new channel to be used by the plurality of STAs is needed; measuring the channel quality of a plurality of frequency channels by at least one of the plurality of STAs; reporting the quality of the plurality of frequency channels in terms of a received signal strength indication (RSSI), Clear Channel Assessment (CCA) busy periods and periodicity; and, selecting one of the candidate channels based on the channel quality report for use in communication between the AP and the plurality of STAs.”)

- U.S. Patent No. 7,206,840 (“Choi 840”) describes “a method and system for dynamically selecting a communication channel” based on “channel quality” measurements. Choi 840 at Abstract.

- U.S. Patent Application Publication No. 2010/0111023 (“Pelletier”) ¶[0152] (“Since the uplink channels 925, 927, 945 on the two uplink carriers may not behave the same, it is possible that the channel quality changes on one carrier 920 differently than on another carrier 940. It is also possible that the channel quality on one carrier 920 changes whereas channel quality does not change on another carrier 940. In one example, channel quality degrades on one uplink carrier 920 while it improves on the other uplink carrier 940. In this case the Node-B has different options for setting the value of the TPC bits on the F-DPCH 975.”), ¶[0185] (“This allows, even a buffer limited WTRU to transmit most of its data, or its highest priority data, over the carrier with the best channel quality or over the carrier that allows transmission of the highest priority data, such as non-scheduled transmissions.”);

- U.S. Patent Application Publication No. 2010/0061346 (“Wang”) at Abstract (“[A] method may include broadcasting, in a downlink direction to one or more mobile stations in a wireless network, a message that includes a channel quality threshold, and receiving a signal from at least one of the one or more mobile stations, the signal being received in an uplink direction on one or more resource blocks that have a channel quality, as measured by one of the one or more mobile station in a downlink direction, that is greater than or equal to the channel quality threshold.”), ¶[0012] (“The apparatus (e.g., the controller and the wireless transceiver) may be configured to receive a message at a mobile station from a base station in a wireless network, a message that includes a channel quality threshold, measure a channel quality for each of a plurality of resource blocks in a downlink direction. The controller may be configured to select, based on the measuring, one or more resource blocks of the plurality of resource blocks that have a channel quality that is greater than or equal to the channel quality threshold.”); ¶[0047] (“In various embodiments, measuring the channel quality of some or all of the sub-carriers may include measuring the channel quality (e.g., SNR) of the resource block or resource band used to transmit the broadcast channel quality threshold message 412. In

some embodiments, the SNR may be measured for each antenna (e.g., MS antennas 404 and 406). In another embodiment, the channel quality may be measured at one antenna or an average of all antennas may be computed for the MS."); ¶[0058] ("In such an embodiment, the BS 402 may receive a plurality of reporting messages 416 via a plurality of resource blocks. In various embodiments, the BS 402 may determine which resource blocks or resource bands experience a sufficient (e.g., as defined by the channel quality threshold) channel quality and are therefore considered "good", and from which MS or MS antenna (e.g., MS antennas 404 and 406) the reporting message 416 delivered via each "good" resource block originated."); Claim 23 ("The method of claim 20 wherein a mobile station includes a plurality of antennas; and wherein the threshold message causes the mobile station to measure the channel quality of the resource blocks of the communications channel for each antenna of the mobile station and compare with the broadcasting channel quality threshold;")

- U.S. Patent Application Publication No. 2007/0098093 ("Kwon") ¶[0013] ("Thus, each MS feeds back CQI information on a sub-band-by-sub-band basis. The BS receives channel quality information of sub-bands to schedule the sub-bands and transmits user data on the sub-band-by-sub-band basis. In an example of the scheduling process, the BS selects MSs of the best channel qualities on the sub-band-by-sub-band basis and transmits data to the selected MSs, such that system capacity can be maximized."), ¶[0014] ("The above-described AMC operation maximizes system capacity by selecting subcarriers relating to good channel responses and transmitting data through the selected subcarriers. Therefore, it is preferred that a structure can select multiple adjacent subcarriers relating to good channel responses to transmit data through the selected adjacent subcarriers. ");

- U.S. Patent Application Publication No. 2008/0101280 ("Gholmieh") at ¶[0036] ("[A] receiver may send CQIs on a feedback link in a wireless communication system to provide a transmitter with information to select appropriate parameters (e.g., modulation scheme, code rate, block size, etc.) for data transmission on a data link to the receiver."); ¶[0072] ("In general, reporting of channel state information may be adjusted by a receiver based on data activity at the receiver. The channel state information may comprise CQI, precoding control indication (PCI) used to precode or spatially process data sent from multiple antennas, antenna selection information indicating which antenna(s) to use to send data, rank information indicating the number of data steams to send simultaneously, etc.").

- U.S. Patent App. Pub. No. 2002/0122465 A1 ("Agee") describes a "spread spectrum communication method, which entails "exploiting the spectral diversity of the channel" to "selectively spread" signals over "more desirable bands" that have "better response than other bands." Agee at Abstract, [0217].

- U.S. Patent App. Pub. No. 2002/0173271 A1 ("Blair") describes a "controller" with a "sensing system that senses … at least one characteristic associated with at least two channels" of a wireless networks, "channel information" stored in a table that is associated with the characteristics of the two channels, and "a selection system that selects channels in accordance with the channel information." Blair at Abstract.

- U.S. Patent No. 7,110,374 ("Malhotra") describes "an algorithm for the assignment of channels used by access points (APs) in wireless LANs in a dynamic way in order to achieve the best performance," which includes "listening" to channels, "calculating the optimal channel with the least interference," and "switch[ing] to the calculated optimal channel." Malhotra at Abstract.

- U.S. Patent No. 7,120,138 ("Soomro") describes "channel measurements" used "to enable selection of a new channel." Soomro at 6:45-51.

- U.S. Patent No. 9,060,352 ("Chan") describes a "dynamic channel assignment scheme[]" for "selecting channels for use by access points operating in a wireless local area network" based on computed "metrics" that reflect the level of activity on each channel. Chan at Abstract, 1:21-25, 1:53-61; see also Chan '437 at Abstract.

- U.S. Patent No. 8,977,218 ("Yen") describes switching "wireless services where stability of real-time response is important" from the 2.4 GHz band to the 5 GHz band. Yen at 5:42-50.

- U.S. Patent App. Pub. No. 2014/0269468 A1 ("Jia") describes communication devices that "dynamically switch between frequency bands to optimize one or more desired performance characteristics as warranted by a given situation." Jia at [0005].

- U.S. Patent No. 8,699,418 ("Iyer") describes that "[c]onnections made on the non-preferred wireless bands may be moved to the preferred wireless band," and that this determination may be based on several considerations, including "roaming characteristics, or on a desire to keep one band available for single-band only devices." Iyer at Abstract, 2:40-53.

- U.S. Patent No. 8.982,820 ("Cordeiro") describes switching between first and second channels operating on different bands during communications, where "the first channel 150 is a 2.4 GHz band and/or 5 GHz band and the second channel 160 is 60 GHz band," in order "to provide a method for reliable multi-band communications between two or more stations where communications over a communication channel in a multi-band communication is less robust than an alternate channel." Cordeiro at 1:22-30, 5:21-42.

- U.S. Patent No. 10,321,484 ("Lou") at 6:48-58 ("Multiple bands may be allowed to cooperate such that the transmissions on the one or more bands may be more efficient. Multiband operation (e.g., cooperative multiband operation) may consider the characteristics of one or more bands (e.g., each band). For example, a band with longer coverage range but limited bandwidth may be utilized to carry control and/or management information. A band with shorter coverage range and large bandwidth may be utilized to carry data traffic. A band with less interference may be used for control information. A band with more interference may be used for data transmission."), Figure 1-3.

Also, to the extent a charted reference does not explicitly disclose identifying and selecting bandwidth portions from a single transceiver based on data transfer characteristics or selectively choosing a transceiver based on data transfer characteristics, a POSITA would have found it obvious to deploy the charted reference with such functionality as taught by any of the above listed references.

9. Simultaneous transmission and receipt using multiple transceivers

Each of the Asserted Patents has asserted claims that recite simultaneous transmission and receipt of data streams using multiple transceivers, such as:

- simultaneous transmission of one data stream using two transceivers ('591 claim 1; '414 claim 1; '105 claims 21, 30; '976 claim 21, 22; '933 claim 21, 22; '177 claims 14, 15; '564 claim 18, 19)
- simultaneous transmission of more than one data streams using two transceivers ('591 claim 10; '337 claim 5; '414 claim 2)
- simultaneous transmission of one data stream using three transceivers ('591 claim 6; '105 claim 24)
- simultaneous transmission of more than one data streams using three transceivers ('591 claim 11; '414 claim 5)
- Simultaneous receipt of one data stream using two transceivers ('105 claims 22, 23; '976 claims 23, 24; '933 claims 23, 24; '177 claims 17, 18; '564 claims 20, 21; '564 claims 26-27)
- Simultaneous receipt of one data stream using three transceivers ('105 claim 28)
- Simultaneous transmission from one transceiver and receipt by another transceiver ('143 claims 1, 30; '976 claims 25-28; '933 claims 25-28; '177 claims 25-26; '756 claims 27-28; '198 claims 27-28; '564 claims 22-25)

See the below table, identifying examples of relevant portions:

'591 Claim 1	first, second, and third wireless transceivers . . . wherein, if the first bandwidth requirement is at least partially satisfied by the bandwidth availabilities of a ***selected two transceivers*** of the first, second, and third wireless transceivers, ***preparing the first data stream for simultaneous transmission to the recipient from both the selected transceivers of the first, second, and third wireless transceivers*** . . .

’591 Claim 6	The wireless networking device of claim 1, wherein, if the first bandwidth requirement is not at least partially satisfied by the bandwidth availabilities of the selected transceivers of the first, second, and third wireless transceivers, ***preparing the first data stream for simultaneous transmission to the recipient from all of the first, second, and third wireless transceivers*** . . .
’591 Claim 10	wherein if the bandwidth requirements of the first and second applications are at least partially satisfied by the bandwidth availabilities of the selected transceivers of the first, second, and third wireless transceivers***, preparing the first and second data streams for simultaneous transmission to the recipient from both the selected transceivers of the first, second, and third wireless transceivers*** . . .
’591 Claim 11	The wireless networking device of claim 10, wherein if the bandwidth requirements of the first and second applications are not at least partially satisfied by the bandwidth availabilities of the selected transceivers of the first, second, and third wireless transceivers, ***preparing the first and second data streams for simultaneous transmission to the recipient from all of the first, second, and third wireless transceivers*** . . .
’337 Claim 2	(to the extent it is construed as reciting simultaneous transmission)
’337 Claim 5	during operation of the wireless networking device, the first and second bandwidth requirements of the first and second applications are at least partially satisfied by the bandwidth availability of the selected transceiver, ***preparing the first and second data streams for simultaneous transmission to the recipient from both of the first and second wireless transceivers*** . . .
’414 Claim 1	wherein, if the first bandwidth requirement is at least partially satisfied by the bandwidth availabilities of the first and second wireless transceivers, ***preparing the first data stream for simultaneous transmission to the recipient from both of the first and second wireless transceiver***s . . .
’414 Claim 2	wherein the processing interface is configured to, when the wireless networking device is being used, in a manner transparent to any layer of the wireless networking device above the processing interface, (i) ***prepare the first and second data streams for simultaneous transmission to the recipient from both of the first and second wireless transceivers*** . . .
’414 Claim 5	wherein, if the first and second bandwidth requirements are not at least partially satisfied by the bandwidth availabilities of the first and second wireless transceivers, (i) identifying at least one portion of the bandwidth availability of the third wireless transceiver, (ii) ***preparing the first and second data streams for simultaneous transmission to the recipient from all of the identified at least one portions of the bandwidths of the first, second and third wireless transceivers*** . . .
’143 Claim 1	wherein the processing interface is configured to, . . . (ii) identify at least a portion of bandwidth available for communication of a ***first selected wireless transceiver*** of the first, second and third wireless transceivers, (iii) ***prepare the first data stream for transmission*** to the first recipient from the first selected wireless transceiver using a specific subset of frequencies corresponding to the identified portion of the available bandwidth of the first selected wireless transceiver, and . . .

	(i) identify at least a portion of bandwidth available for communication of a ***second selected wireless transceiver*** of the first, second and third wireless transceivers to receive a data stream transmitted from a second recipient, (ii) ***receive the data stream transmitted to the wireless networking device from the second recipient*** utilizing a specific subset of frequencies corresponding to the identified portion of the bandwidth available for communication of the second selected wireless transceiver; wherein the ***transmission of the first data stream to the first recipient occurs at least partially simultaneously with the reception of the data stream transmitted from the second recipient***;
’143 Claim 30	The method of claim 1, wherein the ***transmission of the first data stream to the first recipient occurs simultaneously with reception of the data stream transmitted from the second recipient***.
’105 Claim 21	The method of claim 1, wherein the processing interface is configured to, . . . aggregate the first identified actual bandwidth portion of the first wireless transceiver with an identified first portion of an available bandwidth of the second wireless transceiver to at least partially ***simultaneously transmit the first data stream to the first recipient from both of the first and second wireless transceivers***.
’105 Claim 22	The method of claim 21, wherein the processing interface is configured to, . . . aggregate the first identified actual bandwidth portion of the first wireless transceiver with an identified first portion of an available bandwidth of the second wireless transceiver ***to cause the first and second wireless transceivers to at least partially simultaneously receive a second data stream from the recipient***.
’105 Claim 23	The method of claim 22, wherein the second data stream is substantially ***simultaneously received by both of the first and second wireless transceivers***.
’105 Claim 24	wherein the processing interface is configured to, when the wireless networking device is being used, and in a manner transparent to any layer of the wireless networking device above the processing interface, aggregate a first identified actual bandwidth portion of the third wireless transceiver with the identified first portions of available bandwidth of the first and second wireless transceivers to ***simultaneously transmit the first data stream to the first recipient from the first, second and third wireless transceivers***.
’105 Claim 28	The method of claim 24, wherein the processing interface is configured to, when the wireless networking device is being used, and in a manner transparent to any layer of the wireless networking device above the processing interface, aggregate the first identified actual bandwidth portions of the first, second and third wireless transceivers ***to cause the first, second and third wireless transceivers to at least partially simultaneously receive the second data stream from the recipient***.
’105 Claim 30	The method of claim 1, wherein the first data stream is substantially ***simultaneously transmitted to the recipient from both of the first and second wireless transceivers***.
’976 Claim 21	The wireless networking device of claim 1, wherein the processing interface is configured to, when the wireless networking device is being used, and in a manner transparent to any layer of the wireless networking device above the processing interface, aggregate the first identified actual bandwidth portion of the first wireless transceiver with an identified first portion of an available bandwidth of the second

	wireless transceiver ***to at least partially simultaneously transmit the first data stream to the first recipient from both of the first and second wireless transceivers.***
’976 Claim 22	The wireless networking device of claim 21, wherein the first data stream is ***substantially simultaneously transmitted to the recipient from both of the first and second wireless transceivers***.
’976 Claim 23	The wireless networking device of claim 21, wherein the processing interface is configured to, when the wireless networking device is being used, and in a manner transparent to any layer of the wireless networking device above the processing interface, aggregate the first identified actual bandwidth portion of the first wireless transceiver with an identified first portion of an available bandwidth of the second wireless transceiver to ***cause the first and second wireless transceivers to at least partially simultaneously receive a second data stream from the recipient***.
’976 Claim 24	The wireless networking device of claim 23, wherein the second data stream is ***substantially simultaneously received by both of the first and second wireless transceivers***.
’976 Claim 25	***use the second wireless transceiver to receive a second data stream from the recipient at least partially simultaneously with the first data stream being transmitted to the recipient from the first wireless transceiver***, . . .
’976 Claim 26	The wireless networking device of claim 25, wherein ***the second data stream is received by the second wireless transceiver substantially simultaneously with the transmission of the first data stream from the first wireless transceiver***.
’976 Claim 27	The wireless networking device of claim 25, wherein the ***start of the reception of the second data stream by the second wireless transceiver is substantially simultaneous with the start of the transmission of the first data stream from the first wireless transceiver***.
’976 Claim 28	The wireless networking device of claim 25, ***wherein the end of the reception of the second data stream by the second wireless transceiver is substantially simultaneous with the end of the transmission of the first data stream from the first wireless transceiver***.
’933 Claim 21	The method of claim 1, wherein the processing interface is configured to, . . . aggregate the first identified actual bandwidth portion of the first wireless transceiver with an identified first portion of an available bandwidth of the second wireless transceiver to ***at least partially simultaneously transmit the first data stream to the first recipient from both of the first and second wireless transceivers***.
’933 Claim 22	The method of claim 21, wherein the ***first data stream is substantially simultaneously transmitted to the recipient from both of the first and second wireless transceivers***.
’933 Claim 23	The method of claim 21, wherein the processing interface is configured to, after the circuitry has been connected to the application interface and when the wireless networking device is being used, . . . aggregate the first identified actual bandwidth portion of the first wireless transceiver with an identified first portion of an available bandwidth of the second wireless transceiver to cause the ***first and second wireless transceivers to at least partially simultaneously receive a second data stream from the recipient***.
’933 Claim 24	The method of claim 23, wherein the ***second data stream is substantially simultaneously received by both of the first and second wireless transceivers***.

’933 Claim 25	***use the second wireless transceiver to receive a second data stream from the recipient at least partially simultaneously with the first data stream being transmitted to the recipient from the first wireless transceiver***, . . .
’933 Claim 26	The method of claim 25, wherein ***the second data stream is received by the second wireless transceiver substantially simultaneously with the transmission of the first data stream from the first wireless transceiver***.
’933 Claim 27	The method of claim 25, wherein ***the start of the reception of the second data stream by the second wireless transceiver is substantially simultaneous with the start of the transmission of the first data stream from the first wireless transceiver***.
’933 Claim 28	The method of claim 25, wherein ***the end of the reception of the second data stream by the second wireless transceiver is substantially simultaneous with the end of the transmission of the first data stream from the first wireless transceiver***.
’177 Claim 14	The method of claim 1, wherein the processing interface is configured to, . . . aggregate the first identified actual bandwidth portion of the first wireless transceiver with an identified first portion of an available bandwidth of the third wireless transceiver ***to at least partially simultaneously transmit the first data stream to the recipient from both of the first and third wireless transceivers***.
’177 Claim 15	The method of claim 14, wherein the ***first data stream is substantially simultaneously transmitted to the recipient from both of the first and second wireless transceivers***.
’177 Claim 17	The method of claim 1, wherein the processing interface is configured to, . . . ***aggregate the second identified actual bandwidth portion of the second wireless transceiver with an identified first portion of an available bandwidth of the third wireless transceiver to at least partially simultaneously receive the second data stream from the recipient***.
’177 Claim 18	The method of claim 17, wherein the second data stream ***is substantially simultaneously received***.
’177 Claim 25	The method of claim 1, wherein ***the transmission of the first data stream to the recipient occurs at least partially simultaneously with the reception of the second data stream from the recipient***.
’177 Claim 26	The method of claim 25, wherein ***the transmission of the first data stream to the recipient occurs simultaneously with the reception of the second data stream from the recipient***.
’756 Claim 27	The wireless networking device of claim 26, wherein ***the transmission of the data stream from the first wireless transceiver is at least partially simultaneous with the reception of the second data stream by the second wireless transceiver***.
’756 Claim 28	The wireless networking device of claim 27, wherein ***the transmission of the data stream from the first wireless transceiver is simultaneous with the reception of the second data stream by the second wireless transceiver***.
’198 Claim 27	The method of claim 26, wherein ***the transmission of the data stream from the first wireless transceiver is at least partially simultaneous with the reception of the second data stream by the second wireless transceiver***.
’198 Claim 28	The method of claim 27, wherein ***the transmission of the data stream from the first wireless transceiver is simultaneous with the reception of the second data stream by the second wireless transceiver***.

’564 Claim 18	aggregate the given resources of the first identified bandwidth portion of the first wireless transceiver that are available for communication with the given resources of the first identified bandwidth portion of the second wireless transceiver that are available for communication ***to at least partially simultaneously transmit the first data stream to the first recipient from both of the first and second wireless transceivers***; and
’564 Claim 19	The wireless networking device of claim 18, wherein ***the first data stream is substantially simultaneously transmitted to the recipient from both of the first and second wireless transceivers***.
’564 Claim 20	aggregate the given resources of the first identified bandwidth portion of the first wireless transceiver that are available for communication with the given resources of the first identified bandwidth portion of the second wireless transceiver that are available for ***communication to cause the first and second wireless transceivers to at least partially simultaneously receive a second data stream from the recipient***; and
’564 Claim 21	The wireless networking device of claim 20, wherein ***the second data stream is substantially simultaneously received by both of the first and second wireless transceivers***.
’564 Claim 22	***use the second wireless transceiver to receive a second data stream from the recipient at least partially simultaneously with the first data stream being transmitted to the recipient from the first wireless transceiver***, . . .
’564 Claim 23	The wireless networking device of claim 22, wherein ***the second data stream is received by the second wireless transceiver substantially simultaneously with the transmission of the first data stream from the first wireless transceiver***.
’564 Claim 24	The wireless networking device of claim 22, wherein ***the start of the reception of the second data stream by the second wireless transceiver is substantially simultaneous with the start of the transmission of the first data stream from the first wireless transceiver***.
’564 Claim 25	The wireless networking device of claim 22, wherein ***the end of the reception of the second data stream by the second wireless transceiver is substantially simultaneous with the end of the transmission of the first data stream from the first wireless transceiver***.
’564 Claim 26	The wireless networking device of claim 22, wherein the processing interface is configured to, . . . aggregate at least one first portion of an actual bandwidth of a third wireless transceiver with the given resources of the first identified bandwidth portion of the second wireless transceiver that are available for communication to ***cause the second and third wireless transceivers to at least partially simultaneously receive a second data stream from the recipient***.
’564 Claim 27	The wireless networking device of claim 26, wherein ***the second data stream is substantially simultaneously received by both of the first and second wireless transceivers***.

To the extent any of the charted references do not explicitly disclose simultaneous transmission and receipt using multiple transceivers, a POSITA would have found it obvious to

deploy the charted reference in such a fashion based on the state of the art. A POSITA would also have found it obvious to augment any charted reference that does not disclose simultaneous transmission and receipt using multiple transceivers with that functionality as disclosed by any one or more of the references discussed below.

In radio communications, multiple-input multiple-output (MIMO) techniques have been used to increase the capacity of a radio link by using multiple transmission antennas and multiple receiving antennas to exploit multipath propagation. Analytical models for MIMO systems were first introduced in the context of multipair telephone cable systems in 1970 by Kaye and George in a paper published on the "Transmission of Multiplexed PAM Signals Over Multiple Channel and Diversity Systems." *See IEEE Transactions on Communication Technology*, Vol. Com-18, No. 5, October 1970, pp. 520 – 526. This paper extended an optimum receiver design for pulse amplitude-modulated (PAM) signals over a single channel to a general case of *M* multiplexed PAM signals over random-time and frequency-dispersive multichannel systems with *l* inputs and *N* outputs (See Fig. 2 below). *Id.* at Abstract.

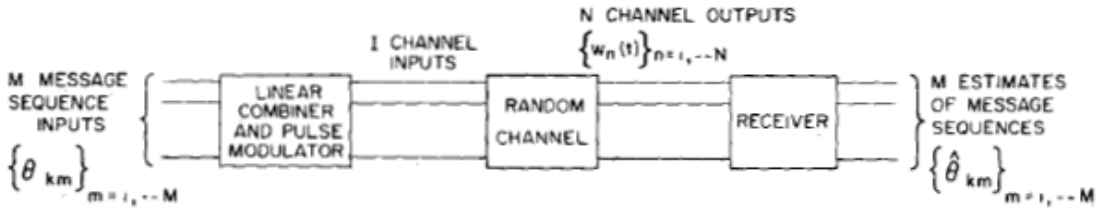

Fig. 2. General form of communication system.

Id. at pp. 521.

Subsequently in 1974, a journal article which presented "[a] formula [] derived for the capacity of a multi-input, multi-output linear channel" describing an analytic expression for information capacity of MIMO channels with discrete-time signals and perfect channel state information was published. *See* Brandenburg and Wyner, *The Bell System Technical Journal*, Vol.

53, No. 5, May-June 1974. This led to several subsequent information theoretic papers dealing with optimizing channel capacity for MIMO systems.

An early reference to the application of MIMO techniques specifically in the context of cellular communications may be found in a 1987 paper on the capacity limits in systems with diversity in a Rayleigh fading environment. *See* Winters, *Journal on Selected Areas in Communications*, "On the Capacity of Radio Communications with Diversity in a Rayleigh Fading Environment", Vol. SAC-5, No. 5, June 1987, pp. 871 – 878. Winters is specifically addressed to "radio communication system[s] … such as a mobile radio or indoor wireless system, the communication channels between multiple transmit and/or receive antennas". "Thus, communication systems, with appropriate signal processing techniques, can use antenna diversity (e.g., space, direction, or polarization) to establish independent channels within the same bandwidth between the transmitters and receivers, thereby achieving large capacity." *Id.* at pp. 871. The figure below from Winters shows a base station with multiple antennas (multiple input) to multiple remote devices which constitute multiple receive antennas (multiple output).

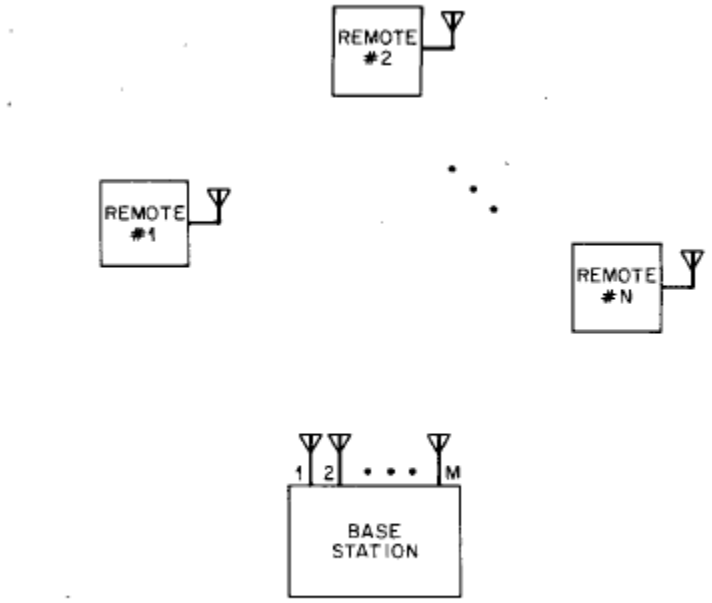

Fig. 1. Radio system consisting of a base station with M antennas and N remotes, each with one antenna.

Id. at pp. 872.

Winters references spatial diversity in a paper he authored in 1984, "Optimum Combining in digital Mobile Radio with Cochannel Interference," which appeared in the *IEEE Journal on Selected Areas in Communications*, Vol. SAC-2, No. 4, July 1984, pp. 528 – 539. This paper mainly focuses on receive diversity; "[p]revious studies of mobile radio systems [] have considered space diversity only for combating multipath fading … [h]owever, in most systems the same interfering signals are present at each of the receiving antennas. Thus, the received signals can be combined to suppress these interfering signals…." *Id.* at pp. 528.

As a specific example of transmit diversity, Adachi published a paper in 1979 entitled, "Transmitter Diversity for Digital FM paging System," IEEE Transactions on Vehicular Technology, Vol. VT-28, No. 4, November 1979, pp. 333 – 338. "Multipath fading is one of the most serious problems for the signal transmission in mobile radio. To combat this problem, the application of transmitter diversity to a digital paging system is described. The method is to transmit two digital FM paging signals with different modulation indices, each of which is modulated by an identical binary signal, from separate antennas." *Id.* at Abstract.

Spatial multiplexing involves "[d]eploying multiple antennas at both the transmitter and the receiver of a wireless system" and was known since the early 1990s when it was shown "to yield extraordinary bit rates []." *See* Bolcskei, et al., "Blind Channel Estimation in Transmit-Receive Antenna Diversity Schemes Using Antenna Precoding," in IEEE *Conference Record of the Thirty-Third Asilomar Conference on Signals, Systems, and Computers*, 24-27b October, 1999, Vol. 2, pp. 1127–1132 ("Bolcskei"). In 1992, A. Paulraj and T. Kailath filed a provisional application for a patent entitled "Increasing Capacity in Wireless Systems Using Distributed Transmission/Directional Reception (DTDR)" which issued as U.S. Patent No. 5,345,599 on September 6, 1994. The '599 patent discloses "A method and apparatus for increasing the capacity

of wireless broadcasts communications system for a central studio to a plurality of users in a service area… Given a source signal whose information rate exceeds the practical information carrying capacity of the available broadcast channel bandwidth, the invention increases the effective capacity of the broadcast system to effectively communication such a source signal. The high-rate signal is split into several low-rate signals such that each can be accommodated within the allocated bandwidth. These low-rate signals are transmitted from spatially separated transmitters, all radiating into the service area in the same frequency channel. Each receiver uses a plurality of antennas to receive these multiple cochannel signals that arrive from different directions-of-arrival." *See* U.S. Patent No. 5,345,599 at Abstract. Thus, this patent discloses a method and apparatus for a MIMO spatial multiplexing system.

By the late 1990's and early 2000's a POSITA would be very familiar with the concept of spatial multiplexing to transmit multiple data streams simultaneously in a MIMO system to significantly increase data throughput rates compared to single input single output and diversity systems. As presented in Bolcskei, spatial multiplexing systems "have been shown to have the potential of achieving extraordinary bit rates." "In the following M_T and M_R denote the number of transmit-and-receive antennas, respectively. Using single-carrier modulation, M_T different data streams are sent simultaneously from the M_T transmit antennas, pass through a time-dispersive matrix channel, and arrive at the M_R receive antennas." *See* Bolcskei at Abstract, pp. 1128.

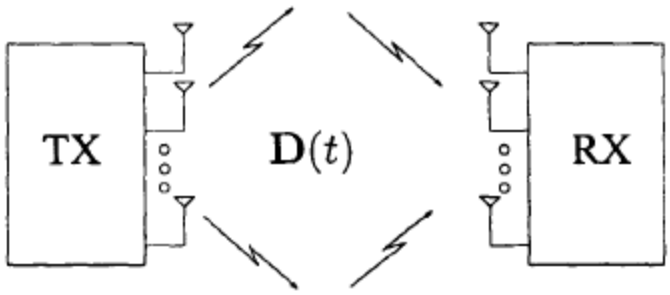

Fig. 1. Space-time coding modem.

Id. at pp. 1128.

In the *IEEE Wireless Communications and Networking Conference*, 23-28 September, 2000, Vol. 3, pp. 426 – 430, Wong, et al., published "Optimizing the Spectral Efficiency of Multiuser MIMO Smart Antenna Systems." In this paper, Wong considered "the maximization of spectral efficiency of a multiuser MIMO system for downlink communications (one base to many mobiles) … [e]ach mobile (user) in the system incorporates an array of n_R antennas and in general transmits $K_m \geq$ space-time subchannels, in the same frequency spectrum and time slot." *See* Wong at Abstract. The authors presented a technique that maximizes the spectral efficiency of the system in the context of the downlink: "…we consider the downlink (base station to many mobiles) communications for wireless systems where smart antennas are employed at both the BS and all MS." *Id.* at pp. 426. The presented multi-user (MU)-MIMO system consists of a single base station with multiple antennas transmitting to multiple mobile stations, each with multiple antennas as shown in Fig. 1 below. A POSITA would understand that the proposed system is a downlink MU-MIMO system where the receivers are all separate radios controlling their own multiple antennas.

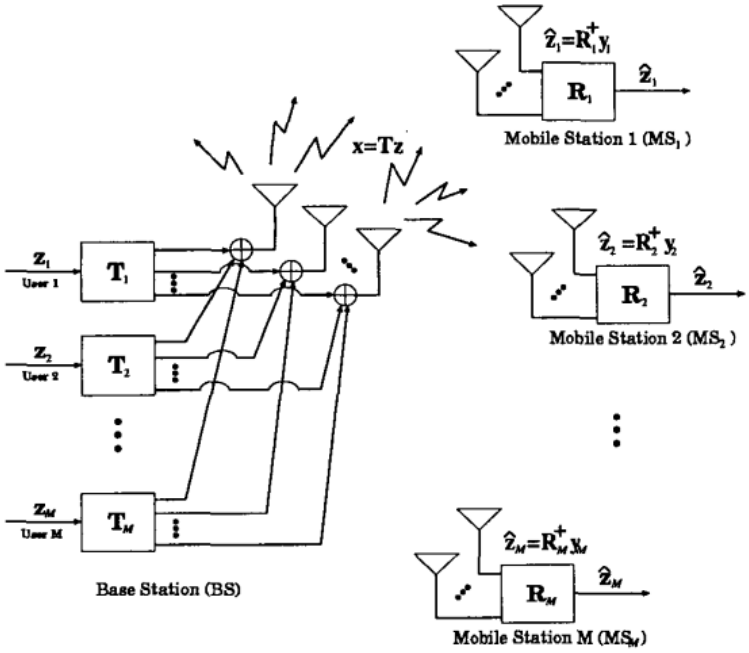

Fig. 1. System configuration of a multiuser MIMO system.

Id. at pp. 430.

Likewise, Rousseaux, et al., published "A Blind Multi-User MIMO Transceiver using Code Modulation in a Multipath Context," in the *14th International Conference on Digital Signal Processing Proceedings,* 1-3 July, 2002, Vol. 2, pp. 267–70. This paper was also focused on "multi-user systems where both the base station and the users have multiple antennas" in a "wideband context" using "OFDM … and related block transmission techniques that use a cyclic prefix." *Id.* at pp. 267.

Other papers presented uplink MU-MIMO systems where mobile stations with multiple antennas transmit data up to the base station which uses multiple antennas to receive the spatially multiplexed data from the multiple mobile stations. In the paper, "Multiuser MIMO Systems and Interference Avoidance", *IEEE International Conference on Acoustics, Speech, and Signal Processing,* 6-10 April, 2003, pp. 828 – 831, Popescu and Rose present "[a] general signal space formulation" used to make "the approach applicable to any MIMO system model regardless of the

choice of basis functions." They further state: "We also note that the approach is general and applicable to any MIMO system model." *See* Popescu and Rose at Abstract, pp. 828. The authors present an application of interference avoidance techniques "to multiuser MIMO systems such as those associated with the uplink of a wireless system in which users and the base station are equipped with multiple antennas." *Id.* at pp. 828.

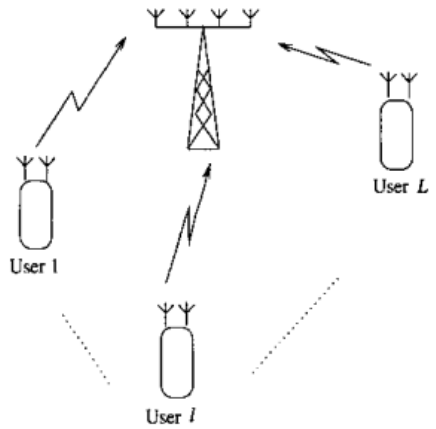

Fig. 1. Multiuser MIMO system in which users and the base station are equipped with antenna arrays for transmission/reception.

By 2004, many papers discussing uplink MU-MIMO were known to a POSITA, such as "Transceiver Optimization for Multiuser MIMO Systems," Serbetli and Yener, *IEEE Transactions on Signal Processing,* Vol. 52, No. 1, January 2004, pp. 214 – 226. "We consider the uplink of a multiuser system where the transmitters as well as the receiver are equipped with multiple antennas. Each user multiplexes its symbols." *See* Serbatli and Yener at Abstract. "We consider the uplink of a single cell synchronous system with K users. The receiver employs N_R antennas. We assume that the ith user multiplexes a fixed number of data streams M_i through its N_T transmit antennas employing an $N_T x M_i$ linear transmitter $\boldsymbol{F}_i$ in one symbol period (Fig. 1)." *Id.* at pp. 215.

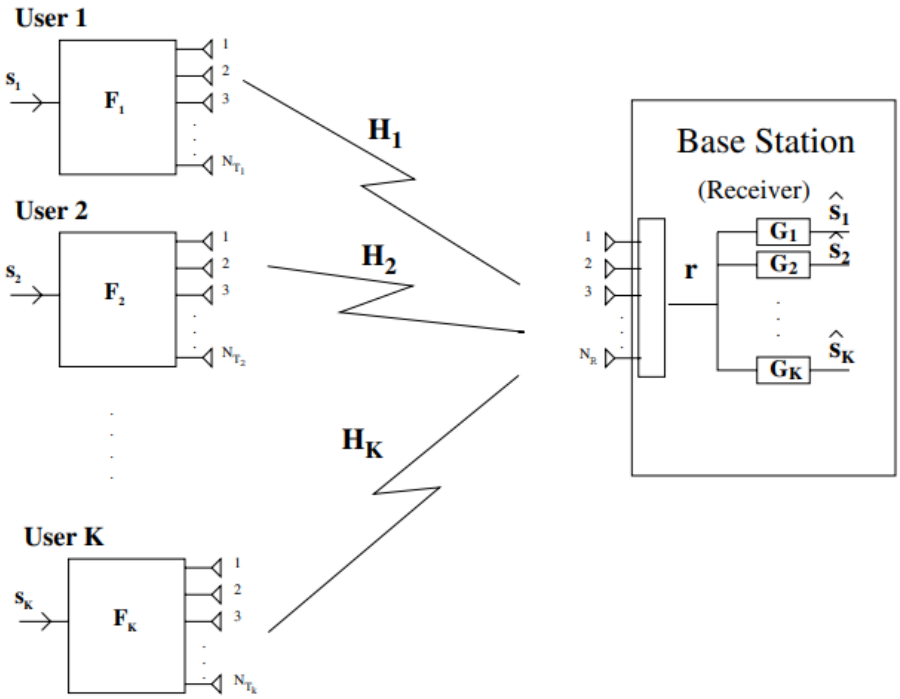

Fig. 1. System model of multiuser MIMO system.

In a MIMO system, each pair of {transmitting antenna (TX_y), receiving antenna (RX_y)} create a distinct communication channel. This is true even if all of the transmitting-receiving antenna pairs utilize the same radio resources (*e.g.*, the same time slot, the same frequency band, and the same modulating code). As such, at least in theory, the MIMO technique can increase the capacity of the given radio resource by the factor of the number of distinct transmitter-receiver antenna pairs. For example, if the number of the transmitting antennas is 4 and the number of receiving antennas is 3, then each of the 12 transmitter-receiver antenna pairs has its own distinct channel, thereby increasing the theoretical capacity of the radio resource by a factor of 12. The overall MIMO system creates a channel "matrix" of all possible transmitter-receiver antenna pairs. As shown below, a 2x2 MIMO system results in four distinct channels, h_{11}, h_{12}, h_{21}, and h_{22}.

Patent Owner's Ex. 2005
Page 094

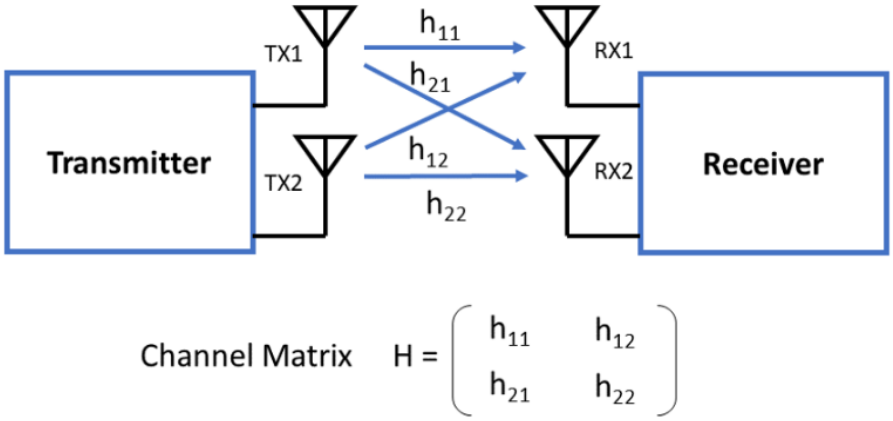

Courtesy of 5G Technology World (WTWH Media LLC).

The increased capacity by the MIMO technique may be allocated to a single user at any given time, which makes this MIMO technique called Single-User MIMO (SU-MIMO). When the increased capacity by the MIMO technique is allocated to multiple users simultaneously, the technique is referred to as the Multi-User MIMO (MU-MIMO). Both the SU-MIMO and the MU-MIMO are widely used in today's wireless communications.

IEEE 802.11ac Standard for Information Technology—Telecommunications and Information Exchange Between Systems Local and Metropolitan Area Networks—Specific Requirements (29 March 2012) ("802.11ac") was formally published on December 18, 2013. On information and belief, 802.11ac is substantially reflective of (if not identical to) Draft 7.0 with a publication date of September 19, 2013. The 802.11ac Task Group was working on MU-MIMO as early as November 2009 (IEEE 802.11ac Task Group Meeting Update, https://grouper.ieee.org/groups/802/11/Reports/tgac_update.htm). MU-MIMO was also addressed in the May 2010, September 2010, and November 2010 meetings. The Comments Spreadsheet of the July 2011 meeting, Draft 1.0 (https://mentor.ieee.org/802.11/dcn/11/11-11-0907-06-00ac-tgac-d0-1-comments.xls) shows significant work on MU-MIMO functionality.

To be sure, to achieve this theoretical capacity increase (*i.e.*, the factor of 12 in the 4x3 MIMO example or the factor of 4 in the 2x2 MIMO example), the signals transmitted over the distinct channels created by different transmitter-receiver antenna pairs must not interfere with each other. In communication systems, one signal (*e.g.*, the first signal) is said to be "interference" with another signal (*e.g.*, the second signal) when the first signal cannot be separated from the second signal by the receiver. For example, suppose a signal is transmitted over a radio channel, which experiences certain external noise at the same frequency where the radio signal is being transmitted. In this case, at the receiver, it is not possible to eliminate the external noise entirely, and thus the external noise is interfering with the transmitted radio signal. In practice, it is often the case that the radio signals transmitted over the distinct channels created by different transmitter-receiver antenna pairs do interfere. For the MIMO technique, an important design goal is to create the distinct channels created by different transmitter-receiver antenna pairs in such a way as to minimize the interference between the channels.

In 2007, Dr. D. W. Bliss published an article explaining the use of MIMO techniques in an ad hoc network to enable simultaneous transmission and receipt. D. W. Bliss Bliss, *Simultaneous Transmission and Reception for Improved Wireless Network Performance*, 2007 IEEE (Aug. 2007) ("A combination of adaptive transmit and receive antenna array approaches is exploited. A number of important types of networking limitations can be resolved given simultaneous transmit and receive technology. The first example is the simultaneous link problem. By employing transmit and receive spatial adaptivity, two links can operate in close proximity using the same frequency at the same time."). Dr. Bliss also goes into detail about how his proposed technology could be used for full duplex relaying—*i.e.*, using the same frequency for both links, a given node can simultaneously receive packets from one node while forwarding them to another. *Id.*

Full-duplex wireless communications, enabling simultaneous transmission and receipt, was also well studied before the priority date of the asserted patents. *E.g.*, Jung Il Choi et al., *Achieving Single Channel, Full Duplex Wireless Communication*, MobiCom (Sept. 20-24, 2010) ("This paper combines three self-interference cancellation schemes, antenna cancellation, RF interference cancellation, and digital cancellation, to implement a practical 802.15.4 full-duplex radio."); Mayank Jain et al., *Practical, Real-time, Full Duplex Wireless*, MobiCom (Sept. 19-23, 2011) ("This paper presents a full duplex radio design using signal inversion and adaptive cancellation. Signal inversion uses a simple design based on a balanced/unbalanced (Balun) transformer. This new design, unlike prior work, supports wideband and high power systems. . . . This paper also presents a full duplex medium access control (MAC) design and evaluates it using a testbed of 5 prototype full duplex nodes."); Achaleshwar Sahai et al., *Pushing the limits of Full-duplex: Design and Real-time Implementation*, Rice University Technical Report TREE1104 (July 4, 2011) ("Recent work has shown the feasibility of single-channel full-duplex wireless physical layer, allowing nodes to send and receive in the same frequency band at the same time."); Xi Fang, et al., *Distributed Algorithms for Multipath Routing in Full-Duplex Wireless Networks*, Conference Paper (Oct. 2011) ("Recently Choi et al. designed the first practical wireless full-duplex system, which challenges the basic assumption in wireless communications that a radio cannot transmit and receive on the same frequency at the same time."). In 2013, Robert A. DiFazio, among other inventors, filed an application for a patent, that later issued as U.S. Patent No. 10,567,147, directed to a full duplex single channel communications system. The '147 disclosed both a frequency division duplexing method where the transmit and receive bands may be sufficiently separated in frequency such that filters can adequately attenuate leakage from one signal to the other. '147 patent 1:26-3, 16:51-67, 17:48-18:23. This patent also taught a full duplex

signal channel capability where a base station may simultaneously transmit and receive data streams in a single frequency channel. ’147 patent at 13:31-56.

The Vertical-Bell Laboratories Layered Space-Time (“V-BLAST”) algorithm and architecture were a prototype MIMO technology developed by Bell Labs in the mid-1990s. The V-BLAST system was in public use at least as of September 10, 1998 when the system was presented at The International Symposium on Advanced Radio Technologies (ISART) conference (ISART-98). G.D. Golden et al., VBLAST A High Capacity Space-Time Architecture (Sept. 10, 1998) (“V-BLAST Slides”).

In 1993, researchers in the telecommunications field were studying and seeking solutions for spread-spectrum multiaccess receivers that employ a cascade of cochannel interference cancellers for communication over multipath fading channels. Y. Yoon, A Spread-Spectrum Multiaccess System with Cochannel Interference Cancellation for Multipath Fading Channels, 11 IEEE 7 (Sep. 1993) (“Yoon”) at Abstract. Yoon proposed a receiver that first coherently demodulates and despreads received signals to produce correlator outputs and data estimates, and that uses these estimates to remove the interference. *Id.* Yoon taught that its receiver could be used either in multiuser or single-user structures, Yoon at 1067, and that the received signal is the sum of all the signals arriving from each user. Yoon at 1068. Other researchers applied Turbo-codes and feedback loops to improve and develop iterative decoder schemes. C. Berrou, A. Glavieux and P. Thitimajshima, Near Shannon Limit Error-Correcting Coding and Decoding Turbocodes 1993 (“Berrou”) at 1064-68. Researchers were also considering spatial diversity using multiple antennas, and optimum combining for increasing system capacity. J. H. Winters, J. Salz, and R. D. Gitlin, The Impact of Antenna Diversity on the Capacity of Wireless Communication Systems (1994) (“Winters”) at Abstract, 1740-46.

On July 1, 1996, Gerard J. Foschini filed U.S. Patent Application No. 08/673,981 that issued on August 1, 2000 as U.S. Patent No. 6,097,771, titled Wireless Communications System Having a Layered Space-time Architecture Employing Multi-element Antenna. The '711 patent taught an enhanced wireless receiver designed to approach the Shannon limit by decomposing a n-dimensional system into n-one dimensional systems of equal capacity. '711 Patent at Abstract. The '711 patent is analogous to Foschini's 1996 paper titled *On Limits of Wireless Communications in a Fading Environment when Using Multiple Antennas* which taught a new layered space-time architecture for wireless systems involving multiple transmit elements and receive elements. G. J. Foschini, Layered Space-Time Architecture for Wireless Communication in a Fading Environment When Using Multiple Antenna (1996) ("Foschini 1996"). Foschini's layered space-time architecture involved a transmission process wherein a data stream is demultiplexed into multiple data streams. *Id.* at 47. Received signals are pre-processed in a layered manner wherein a spatial element is associated with each layer of the stack, specifically a transmit antenna. *Id.* at 49. The purpose of the preprocessing stage is to help later determine the signal sent from a specific transmit antenna and to yield a vector free of interference from all signals that were simultaneously transmitted. *Id.*at 51. The central theme of the architecture is interference avoidance, and that interfering signals will be nulled out. *Id.* at 50.

On April 15, 1998, Foschini filed U.S. Patent Application No. 09/060,657 that issued on November 13, 2001 as U.S. Patent 6,317,466, titled "Wireless Communications System Having a Space-time Architecture Employing Multi-element Antennas at Both the Transmitter and Receiver." Foschini taught that the bit rate at which wireless communications system communicates data in scattering environments may be increased by using multiple antennas at both the transmitter and receiver and by decomposing the channel into multiple subchannels. '466

Patent at Abstract. That same year, Foschini published an article titled *On Limits of Wireless Communications in a Fading Environment when Using Multiple Antennas* in which he examined the use of multi-element array technology, i.e. processing the spatial dimension, to improve wireless capacities. G. J. Foschini et al, On Limits of Wireless Communications in a Fading Environment (1998) ("Foschini 1998") at 1.

In 1998, G. D. Golden, G. J. Foschini, R. A. Valenzuela, and P. W. Wolniansky introduced V-BLAST in a presentation titled *V-BLAST: A High Capacity Space-Time Architecture for the Rich-Scattering Wireless Channel*. V-BLAST Slides. Golden, Foschini, Valenzuela, and Wolniansky described the multiple transmit and multiple receive antenna wireless communication system shown below:

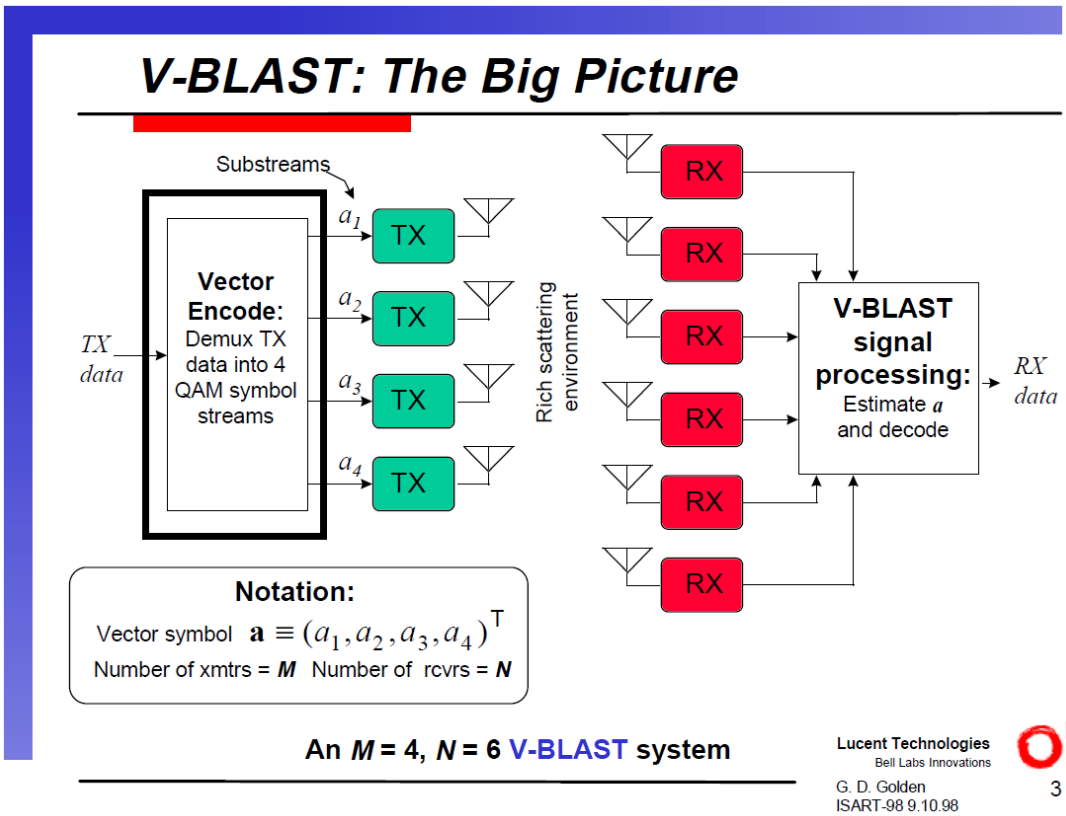

Key assumptions of V-BLAST are that transmitters operate co-channel, symbol-synchronized, and the transmitted substreams are independent. V-BLAST Slides at 4. Substreams

are not uncoupled and interfere with each other, but V-BLAST treats each substream as a desired signal and the rest of the substreams as interferers while exploiting substream synchronism, permitting symbol cancellation with optimal ordering. V-BLAST Slides at 12.

In 1998, Peter Wolniansky wrote an article titled *V-BLAST: An Architecture for Realizing Very High Data Rates Over the Rich-scattering Wireless Channel* in which he described D-BLAST and V-BLAST systems, including how receivers operate co-channel and how V-BLAST detection works, including specific computations for nulling vectors. V-BLAST inventors and other researchers have published articles describing the architecture and algorithms of V-BLAST. *E.g.*, G. D. Golden, et al., *Detection algorithm and initial laboratory results using V-BLAST space-time communication architecture*, 35 ELECTRONICS LETTERS 1 (Jan. 7, 1999); Thomas L. Marzetta, *BLAST Training: Estimating Channel Characteristics for High Capacity Space-Time Wireless*, 37 Allerton Conference (Sept. 22, 1999); *see also* D. Chiznik, et al., *Capacities of Multi-Element Transmit and Receive Antennas: Correlations and Keyholes*, 36 Electronics Letters 13 (June 22, 2000).

In 2000, researchers began investigating and analyzing V-BLAST, a space-time processing technique, as a potential multiuser detection technique *E.g.*, Huaiyu Dai, et al., *Iterative Space-time Processing for Multiuser Detection in Multipath CDMA Channels*, Proc. IEEE 6th Int. Symp. Spread Spectrum Techniques, vol. 2, pp. 343-347, Parsippany, NJ, (Sept. 6-8, 2000) [also submitted to IEEE Trans. Signal Processing, pp. 2116-2127].). Researchers recognized that to overcome the computational burden of increasing numbers of users and receive antennas, iterative implementation of space-time multiuser detection algorithms should be considered. *Id.*; *see also* S. Sfar, et al., *Achieving High Capacities in CDMA Systems Using Multiuser Detection Based on BLAST* (June 11-14, 2001); S. Sfar et al., *Analysis of Slotted CDMA Packet Access Based on Non-*

linear Multiuser Detection (June 11-14, 2001)); S. Sfar, et al., *Performance of Packetized Layered Space-Time Detection Over Wireless Links*, IEEE Symposium on Computers and Comms. (July 5, 2001); D. Samardzija, et al., *Performance Evaluation of the VBLAST Algorithm in W-CDMA Systems*, IEEE Vehicular Tech. Conf. (Oct. 2001); Huaiyu Dai, et al., *Turbo Multiuser Detection for Coded DMT VDSL*, 20 IEEE Comms. 351 (Feb. 2002); S. Sfar, et al., *Layered Space-time Multiuser Detection Over Wireless Uplink Systems*, In Review in IEEE (rev. Mar. 25, 2002); Huaiyu Dai, et al., *Multiuser Detection for Interference-Limited MIMO Systems*, IEEE Vehicular Tech. Conf. (May 2002); Ruly Lai-U Choi, et al., *MIMO CDMA Antenna System for SINR Enhancement*, 2 IEEE Transactions on Wireless Comms. 2 (Mar. 31, 2003); Mincheol Park, *Performance Evaluation of Multiuser Detectors with V-BLAST*.

Additionally, MIMO beamforming techniques for downlink transmission to multiple users using multiple antennas simultaneously was also known by POSITAs before the priority date of the asserted patents. For example, in 2002, Dr. Dammann described beamforming techniques using "[m]ultiple beams of one or more smart transmission antennas … aimed at the receiver," and "each of the beams reaches the receiver by using the topographical scenarios of the wireless channel." Armin Dammann et al., *Beamforming in Combination with Space-Time Diversity for Broadband OFDM Systems*, 2002 IEEE ICC. In 2002 and 2003, Dr. Pederson described the use of multiple-antenna array systems for beamforming in WCDMA and UMTS. Klaus I. Pedersen, *Directional Power-Based Admission Control for WCDMA Systems Using Beamforming Antenna Array Systems*, IEEE Transactions on Vehicular Tech (2002) ("A directional power-based admission control (AC) scheme is proposed for base stations deploying beamforming antenna arrays."); Klaus I. Pedersen, *Application and Performance of Downlink Beamforming Techniques in UMTS*, IEEE Communications Magazine (Oct. 2003) ("The use of antenna arrays is one promising

technique that can help increase the capacity of terrestrial cellular systems significantly, or alternatively improve the coverage. The basic principle is to multiply the signals at the different antenna branches . . . . Antenna array systems can basically be designed to operate in one of two distinct modes: diversity or beamforming.”).

Additionally, point to multipoint wireless systems—wherein a single access point transmits data to multiple receiving locations simultaneously—were also well known. E.g., U.S. Patent Application 2004/0077338 (“Hsu”) at ¶¶[0006]-[0007] (“This and other objects are achieved by a point to multipoint wireless communication system having an access point configured to receive data signals from an external system. . . . A plurality of subscriber units are provided within the area, each subscriber unit having an antenna, a processor and circuitry controlled by the subscriber unit processor to transmit wireless electromagnetic signals to, and receive wireless electromagnetic signals from, the access point.”); Hicham Khalife et al., *Point to Multipoint Transport in Multichannel Wireless Environments*, 2013 IEEE Wireless Comm. And Networking Conference (April 7-10, 2013) (“We propose a transport protocol capable of dynamically adapting to network and receiver properties in multi-destination, multi-channel wireless networks.”).

Simultaneous transmission and receipt of data streams using multiple transceivers was also disclosed in U.S. Patent No. 10,321,484 (“Lou”) at 4:41-49 (“In multi-band operation, a communication session may be transferred from a 60 GHz frequency band to a lower frequency band, such as a 5 GHz frequency band, for example. A multi-band capable device may manage operation over one or more frequency bands. The multi-band capable device may support operation on multiple frequency bands, for example, simultaneously. The multi-band capable device may support operation on one frequency band at a time and may transfer between frequency bands.”), 19:41-53 (“The transmit/receive element 922 may be configured to transmit signals to,

or receive signals from, a base station (e.g., the base station 914 a) over the air interface 915/916/917. For example, in one embodiment, the transmit/receive element 922 may be an antenna configured to transmit and/or receive RF signals. . . . It will be appreciated that the transmit/receive element 922 may be configured to transmit and/or receive any combination of wireless signals."), 19:54-61 ("In addition, although the transmit/receive element 922 is depicted in FIG. 9B as a single element, the WTRU 902 may include any number of transmit/receive elements 922. More specifically, the WTRU 902 may employ MIMO technology. Thus, in one embodiment, the WTRU 902 may include two or more transmit/receive elements 922 (e.g., multiple antennas) for transmitting and receiving wireless signals over the air interface 915/916/917."), at 19:62-20:2 ("The transceiver 920 may be configured to modulate the signals that are to be transmitted by the transmit/receive element 922 and to demodulate the signals that are received by the transmit/receive element 922. As noted above, the WTRU 902 may have multi-mode capabilities. Thus, the transceiver 920 may include multiple transceivers for enabling the WTRU 902 to communicate via multiple RATs, such as UTRA and IEEE 802.11, for example."), Figure 1-3.

10. Simultaneously transmitting and receiving over the same RF cycle

Some Asserted Claims include a recitation that data is transmitted over a portion of the RF cycle and data is simultaneously received over that same portion of the RF cycle. However, that feature was a part of the state of the art by the time of alleged invention, and a POSITA would have found it obvious, in view of the state of the art, to add that feature to the wireless networking device of any charted reference that does not disclose it. A POSITA also would have found it obvious to augment any of the charted references that does not disclose this feature with this feature as taught by the references set forth below.

This feature was disclosed in, for example, references Choi, Jung Il, et al. ("Achieving single channel, full duplex wireless communication." *Proceedings of the sixteenth annual international conference on Mobile computing and networking*. 2010.), Jain, Mayank, et al. ("Practical, real-time, full duplex wireless." *Proceedings of the 17th annual international conference on Mobile computing and networking*. 2011.), and U.S. Patent 10,567,147 (DiFazio). For example, Jain describes a "design for a full duplex radio based on a novel cancellation technique called balun [balanced/unbalanced transformer] cancellation. Unlike prior designs, balun cancellation can work on wideband, high power signals, such that it is possible to build full duplex 802.11n devices. These devices can automatically tune their cancellation circuits and so operate in dynamic environments. The paper describes the implementation of a full duplex prototype that uses an 802.11-like OFDM link layer which can operate in real time." Jain at 11. This is further evidence of the state of the art and the knowledge that a POSITA would have applied to the charted references, and for the reasons set forth herein a POSITA would also have been motivated to combine the relevant teaching of any or all of these references with any of the charted references.

11. "Puncturing" or "Preamble Puncturing"

XiFi's infringement contentions repeatedly assert that Asserted Claim cover a feature known in the art as, inter alia, "puncturing" or "preamble puncturing."

Reflecting that this feature was a well-known concept in the state of the art as of the time of alleged invention, it was specifically disclosed in, for example, U.S. Patent App. No. 2006/0120473 ("Chitrapu"), Int'l Patent App. No. WO1999/08464 ("Posti"), U.S. Patent No. 7,764,742 ("Shoemake"), U.S. Patent No. 7,929,409 ("Chitrapu '409"), U.S. Patent No. 8,908,493 ("Park"), U.S. Patent No. 7,245,879 ("Sadri"), U.S. Patent App. No. 2004/0264362 ("Ali"), U.S. Patent App. No. 2005/0157638 ("Sedarat"), U.S. Patent No. 6,385,752

("Callaway"), U.S. Patent No. 8,565,194 ("Shen"), U.S. Patent No. 3,488,445 ("Chang"), U.S. Patent No. 8,059,611 ("Nakamura"), U.S. Patent No. 9,055,592 ("Clegg"), Int'l Patent App. No. WO2007/014310 ("Mahadevappa"), U.S. Patent No. 10,827,385 ("Chu"), as well as academic papers including "Virtual subcarrier assignment with multiple subcarrier puncturing for spatial filtering of OFDM signals" (Asai et al., 2004), "Interference Suppression for OFDM Systems" (2005), "A pseudo random postfix OFDM based modulator for multiple antennae systems" (Muquet et al., 2004), "Subcarrier Nulling: OFDM Active Interference Cancellation for Coexistence of Heterogeneous Wireless Systems" (Leu et al., 2007), "A selection region based routing protocol for OFDM systems" (2008), "An Efficient Implementation of NC-OFDM Transceivers for Cognitive Radios" (Rajbanshi et al., 2007), "Interference Avoidance in OFDM-Based Wireless Systems" (IEEE Transactions on Wireless Communications, 2009), "Multi-carrier OFDM" (Mobius Consulting, 2008), and "Advanced Techniques to Improve the Performance of OFDM Systems" (DTIC, 2004).

For example, Chitrapu explicitly teaches "subcarrier puncturing" and provides a detailed implementation as shown in Figure 2. The patent states: "The first inventive method of interference averaging utilizes subcarrier puncturing. Sub carrier puncturing involves transmitting zeros (nulls) on selected subcarriers. Since a null subcarrier does not contribute to the transmitted signal power, the total signal power over a symbol period is reduced by the presence of the null subcarriers." Chitrapu at [0024]. The patent further explains that "For the exemplary 50% loading/two OFDM symbol transmission assumption, half of the N subcarriers would contain data symbols and the other half would contain zeros. This would reduce the transmitted signal power over an OFDM symbol period by 50%." Id.

A POSITA would have found it obvious to add "puncturing" to the wireless networking device of any charted reference that does not itself disclose the feature, either in view of the state of the art or in view of any of the charted references or references set forth in this section that disclose the feature.

12. Other Ways of Using Network Resources

All Asserted Patents includes claims reciting that (typically at least in part in response to the above-described evaluations) network resources are used in particular way. A sample of those claim recitations are set forth in the table below. These include, for example:

- preparing to transmit or transmitting a data stream using an identified bandwidth portion
- receiving a data stream using an identified bandwidth portion
- selecting between different bandwidth portions of a single transceiver based on evaluation of data transfer characteristics
- making bandwidth allocation decisions between transceivers
- making bandwidth allocation decisions based on data stream signal type
- selectively using different transceivers based on data transfer characteristics
- identifying a first bandwidth portion of a transceiver and only using a subset that is not unavailable
- identify a second bandwidth portion of a transceiver and only use subset that is not unavailable
- identify an alternative bandwidth portion of a transceiver when an initially identified portion becomes unavailable and only using a subset of the newly identified portion that is not unavailable
- identify a bandwidth portion of a second transceiver when initially an identified portion becomes unavailable and only using a subset of the newly identified portion that is not unavailable
- using bandwidth of two transceivers to transmit and/or receive non-simultaneously
- using bandwidth of two transceivers for partially/substantially simultaneous transmission of a single data stream

- using bandwidth of two transceivers for partially/substantially simultaneous receipt of a single data stream
- using bandwidth of two transceivers for partially/substantially simultaneous transmit/receipt of a single data stream
- using bandwidth of three transceivers for partially/substantially simultaneous operation
- using bandwidth of two transceivers for partially/substantially simultaneous transmission of two data streams

Some of these limitations are specifically addressed in other subsections of this section. More generally, all of these limitations do nothing more than recite techniques or features that were not only part of the state of the art at the time of alleged invention (as evidenced at least by their disclosure in the charted references and other references cited herein), but that are also just common sense ways of using a one or more (possibly subdividable) communication resources like bandwidth or transceivers.

For example, they cover techniques such as: apply more bandwidth or transceivers to the communication, subdivide the bandwidth resources and make more granular use of it, use available resources in parallel, and dynamically adapt to changing resource availability or communication needs. For at least this reason, all of the claimed techniques are features that a POSITA would have found obvious, in view of the state of the art, to apply to the wireless networking device disclosed by any of the charted references. Similarly, to the extent a charted reference does not disclose one of these techniques or features, a POSITA would have found it obvious to augment that reference's wireless networking device with these features or techniques as disclosed by a reference (charted or identified in these cover pleadings) that does.

E. Simultaneous "Invention" By Others

As evidenced by the material presented above and the invalidity charts, the subject matter of the Asserted Patents was being (indeed, had been) actively explored by others at the time of

alleged invention. The breadth of this activity is itself indicative of obviousness, as Samsung will more fully explain at the appropriate time in accordance with the schedule set by the Court.

F. No Secondary or Objective Indications of Non-Obviousness

Objective indications of non-obviousness include: (1) commercial success, (2) copying, (3) industry praise, (4) skepticism, (5) long-felt but unsolved need, and (6) failure of others. *See*, *e.g.*, *Transocean Offshore Deepwater Drilling, Inc. v. Maersk Drilling U.S., Inc.*, 699 F.3d 1340, 1349–56 (Fed. Cir. 2012). Samsung is not aware of any evidence that would tend to establish any secondary indications of non-obviousness. This lack of evidence further renders the Asserted Claims obvious. Proving any such secondary considerations is XiFi's burden. *See*, *e.g.*, *ZUP, LLC v. Nach Mfg., Inc.*, 896 F.3d 1365, 1373 (Fed. Cir. 2018) ("[A] patentee bears the burden of production with respect to evidence of secondary considerations of nonobviousness."). Accordingly, Samsung reserves all rights regarding its full contention in this respect until after XiFi completes its final and binding disclosure of any such evidence and contentions. In the meantime, Samsung note the complete lack of any such evidence in the record.

XiFi has disclosed no evidence of, and Samsung knows of no viable evidence to suggest:

The alleged invention's commercial success. No products are known to practice the Asserted Claims. To the extent XiFi asserts that Samsung's products practice the Asserted Patents, Samsung denies that assertion and incorporates its responses to date and any future contentions, expert reports, and testimony. Further, Samsung knows of no nexus between any commercial success and the Asserted Claims. *See, e.g.*, *Windsurfing Int'l Inc. v. AMF*, 782 F.2d 995 (Fed. Cir. 1986) (considerations such as intervening, non-covered technological innovations, popularity of accessories, and advertising expense are all relevant to the nexus determination). If any commercial success is due to any of the concepts discussed in the Asserted Patents, those concepts are also present in the prior art, as described above, and thus do not support any commercial

success that is relevant to the question of obviousness. *See Tokai Corp. v. Easton Enters, Inc.*, 632 F.3d 1358, 1369–70 (Fed. Cir. 2011) ("If commercial success is due to an element in the prior art, no nexus exists."); *In re Huai-Hung Kao*, 639 F.3d 1057, 1068 (Fed. Cir. 2011) ("Where the offered secondary consideration actually results from something other than what is both claimed and novel in the claim, there is no nexus to the merits of the claimed invention."); *Ormco Corp. v. Align Tech., Inc.*, 463 F.3d 1299, 1312 (Fed. Cir. 2006) ("[I]f the feature that creates the commercial success was known in the prior art, the success is not pertinent.").

Nor has XiFi presented evidence of commercial success via a licensing program.

Long felt but unresolved needs. XiFi has presented no evidence of any long felt and unresolved need. To the contrary, multiple solutions to the alleged problems pre-dated the Asserted Claims.

Industry praise. There is also no evidence of industry praise for the alleged invention of the Asserted Claims. To the extent any praise is related to any functionality that allegedly practices the Asserted Claims, that praise is not due to any novel features of the Asserted Patents, but instead only to features present in the prior art, which is not a sufficient nexus to be relevant to the question of industry praise for purposes of obviousness. *See Muniauction, Inc. v. Thomson Corp.*, 532 F.3d 1318, 1328 (Fed. Cir. 2008). Praise of accused devices and their features is not praise of the Asserted Patents.

Unexpected results. No evidence of any such unexpected results is known. As discussed above, the concepts contained in the Asserted Claims were already combined in the same manner as in those claims. These prior art systems, as described in the above-referenced exhibits, disclosed the same combination of elements, and the same result of that combination, that is recited in the

claims. Thus, there were no unexpected results that arose from combining the well-known elements in the Asserted Claims.

The failure of others. No evidence of any such failure is known, and no such failure is associated with a problem that was first solved by the Asserted Claims.

Skepticism by experts. No experts or person of skill expressed skepticism about implementing the alleged inventions.

Teaching away by others. No evidence of any such teaching is known.

Recognition of a problem. As discussed above, the industry recognized the problem and had already discussed multiple approaches that implemented the Asserted Claims to solve that problem.

Copying of the alleged invention by competitors. No evidence of any such copying is known. *See Amazon.com, Inc. v. Barnesandnoble.com, Inc.*, 239 F.3d 1343, 1366 (Fed. Cir. 2001) (allegedly copied feature must be an embodiment of the patented claims).

G. Amendment or Supplementation

Samsung reserves the right to amend these Invalidity Contentions to assert these references depending on the infringement positions XiFi may take as the case proceeds and/or on Samsung's ongoing investigation.

Samsung also reserves the right to amend or supplement these contentions regarding anticipation or the obviousness of the Asserted Claims in view of further information from XiFi, or information discovered during discovery. XiFi has not identified what elements or combinations it alleges were not known to one of ordinary skill in the art at the time. Therefore, for any claim limitation that XiFi alleges is not disclosed in a particular prior art reference, Samsung reserves the right to assert that any such limitation is either inherent in the disclosed reference or obvious to one of ordinary skill in the art at the time in light of the same, or that the limitation is disclosed

in another of the references disclosed above and in combination would have rendered the asserted claim obvious.

VII. INVALIDITY UNDER 35 U.S.C. § 112

Pursuant to the Order Governing Proceedings, Samsung identifies below grounds of invalidity under 35 U.S.C. § 112.

A. Legal Background Regarding The Indefiniteness, Enablement, And Written Description Requirements

United States Code Title 35, Section 112(b) includes a definiteness requirement: "The specification shall conclude with one or more claims particularly pointing out and distinctly claiming the subject matter which the inventor or joint inventor regards as the invention." 35 U.S.C. § 112(b). "[A] patent is invalid for indefiniteness if its claims, read in light of the patent's specification and prosecution history, fail to inform, with reasonable certainty, those skilled in the art about the scope of the invention." *Nautilus, Inc. v. Biosig Instruments, Inc.*, 134 S. Ct. 2120, 2124 (2014).

The definiteness requirement requires that the claim set forth what the applicant regards as the invention, and do so with sufficient particularity and definiteness. *Allen Eng'g Corp. v. Bartell Indus.*, 299 F.3d 1336, 1348 (Fed. Cir. 2002). Where it would be apparent to one of skill in the art, based on the patent specification, that the "invention" set forth in a claim is not what the patent applicant regarded as the invention, the claim is invalid. *Id.*

35 U.S.C. § 112 further includes an enablement requirement: "The specification shall contain a written description . . . of the manner and process of making and using [the invention] in such full, clear, concise and exact terms as to enable any person skilled in the art to which it pertains, or with which it is most nearly connected, to make and use the same." 35 U.S.C. § 112(a). To satisfy the enablement requirement, the disclosure "must teach those skilled in the art how to

make and use the full scope of the claimed invention without 'undue experimentation.'" *Genentech, Inc. v. Novo Nordisk A/S*, 108 F.3d 1361, 1366 (Fed. Cir. 1997); *MagSil Corp. v. Hitachi Glob. Storage Techs., Inc.*, 687 F.3d 1377, 1381 (Fed. Cir. 2012); *Sitrick v. Dreamworks, LLC*, 516 F.3d 993, 999 (Fed. Cir. 2008). If a specification teaches away from a substantial portion of the claim or does not enable the full scope of the claim, there is no enablement. *AK Steel Corp. v. Sollac*, 344 F.3d 1234 (Fed. Cir. 2003); *see also MagSil Corp.*, 687 F.3d at 1383-84 (Fed. Cir. 2012).

35 U.S.C. § 112 further includes a written description requirement: "The specification shall contain a written description of the invention . . . ." 35 U.S.C. § 112(a). "To satisfy the written description requirement, a patent applicant must convey with reasonable clarity to those skilled in the art that, as of the filing date sought, he or she was in possession of the invention." *ICU Medical Inc. v. Alaris Medical Systems, Inc.*, 558 F.3d 1368, 1377 (Fed. Cir. 2009) (internal quotation marks and citations omitted); *see also Synthes USA, LLC v. Spinal Kinetics, Inc.*, 734 F.3d 1332, 1340 (Fed. Cir. 2013). "The test [for written description support] requires an objective inquiry into the four corners of the specification from the perspective of a person of ordinary skill in the art. Based on that inquiry, the specification must describe an invention understandable to that skilled artisan and show that the inventor actually invented the invention claimed." *Ariad Pharmaceuticals, Inc. v. Eli Lilly & Co.*, 598 F.3d 1336, 1351 (Fed. Cir. 2010) (en banc).

The specification must describe the claimed invention in sufficient detail so that a POSITA can recognize what is claimed. "The appearance of mere indistinct words in a specification or a claim, even an original claim, does not necessarily satisfy that requirement." *University of Rochester v. G.D. Searle & Co.*, 358 F.3d 916, 923 (Fed. Cir. 2004) (internal quotation marks and citations omitted).

B. Invalidity Grounds Under 35 U.S.C. § 112

Based on XiFi's Infringement Contentions, and subject to the reservations set out above, Samsung identifies grounds upon which it contends that the Asserted Claims are invalid for failure to meet the requirements of 35 U.S.C. § 112(a), (b), and/or (d). Although its investigation continues, Samsung believes that the Asserted Claims identified below are invalid for failure to comply with 35 U.S.C. § 112 for at least the following reasons: (1) the common specification of the Asserted Patents lacks a written description of the alleged inventions of the Asserted Claims in full, clear, concise, and exact terms as required by 35 U.S.C. § 112(a); (2) the common specification of the Asserted Patents does not enable the Asserted Claims as required by 35 U.S.C. § 112(a); (3) one or more of the Asserted Claims fail to specify the scope of the claimed inventions with reasonable particularity as required under 35 U.S.C. § 112(b); and/or (4) to the extent the common specification enables or does not lack a written description of the alleged inventions of the Asserted Claims, the claims rely on new matter added to the specifications of the Asserted Patents or their priority applications during prosecution, and/or patents incorporated by reference in the Asserted Patents, and thus are not entitled to the claimed priority date.

Samsung specifically reserves the right to amend and/or supplement these Invalidity Contentions based on a failure to comply with the requirements of 35 U.S.C. § 112, including, for example, based on supplementation or amendments to XiFi's deficient Infringement Contentions.

The Asserted Claims fail to meet the written description requirement because the alleged inventions claimed therein are not sufficiently described in the common specification of the Asserted Patents. Specifically, the Asserted Claims fail to meet the written description requirement for at least the terms identified below because, based on those terms, the common specification of the Asserted Patents does not adequately convey to those skilled in the art that the inventors had possession of the claimed subject matter as of the filing date. The Asserted Claims additionally

fail to meet the enablement requirement because the common specification of the Asserted Patents does not describe the manner and process of making and using the alleged inventions in the Asserted Claims to enable a person of skill in the art to make and use the full scope of the alleged invention without undue experimentation. Specifically, the Asserted Claims fail to meet the enablement requirement for at least the terms identified below because the common specification of the Asserted Patents does not describe the manner and process of making and using the alleged invention in the Asserted Claims. Based on Samsung's present understanding of the Asserted Claims and XiFi's apparent interpretation of these claims as reflected in its Infringement Contentions, the Asserted Claims may fail to satisfy the requirements of § 112(b) because the precise scope of at least the phrases listed below (or terms contained therein) cannot be determined with reasonable certainty by a POSITA when reading the claims in light of the specification and prosecution history.

The Asserted Claims fail the requirements of 35 U.S.C. § 112 in view of at least the following claim terms and phrases:

Asserted Claims[6]	**Claim Term**	**Invalidity Based on 35 U.S.C. § 112**
'591 Patent		
All claims	"wherein each one of the first, second, and third wireless transceivers … is adapted to emit radio waves in first, second, and third different bands of frequencies"	Lack of Written Description; Lack of Enablement; Indefinite
All claims	"in a manner transparent to any layer of the wireless networking device above the processing interface"	Lack of Written Description; Lack of Enablement; Indefinite

[6] Includes unlisted claims that depend from listed claims.

Asserted Claims[6]	Claim Term	Invalidity Based on 35 U.S.C. § 112
All claims	"request or create (i) a first association between a recipient and the first actual MAC and PHY interfaces, (ii) a second association between the recipient and the second actual MAC and PHY interfaces and (iii) a third association between the recipient and the third actual MAC and PHY interfaces"	Lack of Written Description; Lack of Enablement; Indefinite
All claims	"identify at least one portion of each one of the first, second, and third bandwidths of the first, second, and third wireless transceivers that are available for communication"	Lack of Written Description; Lack of Enablement; Indefinite
All claims	"simultaneous transmission"	Lack of Written Description; Lack of Enablement; Indefinite
All claims	"specific subset of frequencies corresponding to the identified portions of their available bandwidth"	Lack of Written Description; Lack of Enablement; Indefinite
All claims	"utilization of the available bandwidth of the first, second, and third wireless transceivers does not prevent other wireless networking devices from utilizing a range of frequencies corresponding to the remaining portion of the bandwidth availability"	Lack of Written Description; Lack of Enablement; Indefinite
All claims	"interface[s]"	Lack of Written Description; Lack of Enablement; Indefinite
Claims 13, 15, and 17	"wherein the at least one portion of the [first/second/third] bandwidth of the [first/second/third] transceiver comprises a single portion"	Lack of Written Description; Lack of Enablement; Indefinite

Asserted Claims[6]	Claim Term	Invalidity Based on 35 U.S.C. § 112
Claims 14, 16, and 18	"wherein the at least one portion of the [first/second/third] bandwidth of the [first/second/third] transceiver is contiguous"	Lack of Written Description; Lack of Enablement; Indefinite
Claim 26	"wherein the processing interface includes a bandwidth allocator"	Lack of Written Description; Lack of Enablement; Indefinite
Claims 20, 21, and 22	"the virtual MAC interface"	Indefinite
'337 Patent		
All claims	"wherein each of the first and second wireless transceivers … is adapted to emit radio waves in first and second different bands of frequencies"	Lack of Written Description; Lack of Enablement; Indefinite
All claims	"in a manner transparent to any layer of the wireless networking device above the processing interface"	Lack of Written Description; Lack of Enablement; Indefinite
All claims	"without requiring the disassociation of the recipient from the actual MAC and PHY interfaces of any wireless transceiver"	Lack of Written Description; Lack of Enablement; Indefinite
All claims	"identify at least one portion of each one of the first and second actual bandwidths of the first and second wireless transceivers that are available for communication"	Lack of Written Description; Lack of Enablement; Indefinite
All claims	"if the unselected wireless transceiver has more bandwidth availability than the selected transceiver … identify at least one portion of the bandwidth of the unselected transceiver that is available for communication"	Lack of Written Description; Lack of Enablement; Indefinite

Asserted Claims[6]	Claim Term	Invalidity Based on 35 U.S.C. § 112
All claims	"select one transceiver of the first and second transceivers which has the most bandwidth available"	Lack of Written Description; Lack of Enablement; Indefinite
All claims	"specific subset of frequencies corresponding to [the/its] identified at least one portion of [its] available bandwidth"	Lack of Written Description; Lack of Enablement; Indefinite
All claims	"utilization of the available bandwidth of the selected and unselected transceivers does not prevent other wireless networking device from utilizing a range of frequencies corresponding to the remaining portion of the bandwidth availabilities"	Lack of Written Description; Lack of Enablement; Indefinite
All claims	"interface[s]"	Lack of Written Description; Lack of Enablement; Indefinite
Claim 2	"simultaneous transmission" / "simultaneously transmitted"	Lack of Written Description; Lack of Enablement; Indefinite
Claims 23 and 25	"wherein the at least one portion of the [first/second] bandwidth of the [first/second] transceiver comprises a single portion"	Lack of Written Description; Lack of Enablement; Indefinite
Claims 24 and 26	"wherein the at least one portion of the [first/second] bandwidth of the [first/second] transceiver is contiguous"	Lack of Written Description; Lack of Enablement; Indefinite
Claim 30	"wherein the processing interface includes a bandwidth allocator"	Lack of Written Description; Lack of Enablement; Indefinite
Claims 19, 20, and 21	"the virtual MAC interface"	Indefinite

Asserted Claims[6]	Claim Term	Invalidity Based on 35 U.S.C. § 112
'414 Patent		
All claims	"wherein each one of the first and second wireless transceivers … is adapted to emit radio waves in first and second different bands of frequencies"	Lack of Written Description; Lack of Enablement; Indefinite
All claims	"in a manner transparent to any layer of the wireless networking device above the processing interface"	Lack of Written Description; Lack of Enablement; Indefinite
All claims	"request or create (i) a first association between a recipient and the first actual MAC and PHY interfaces and (ii) a second association between the recipient and the second actual MAC and PHY interfaces"	Lack of Written Description; Lack of Enablement; Indefinite
All claims	"identify at least one portion of each one of the first and second bandwidth availabilities of the first and second wireless transceivers"	Lack of Written Description; Lack of Enablement; Indefinite
All claims	"simultaneous transmission" / "simultaneously transmitted"	Lack of Written Description; Lack of Enablement; Indefinite
All claims	"specific subset of frequencies corresponding to the identified at least one portions of their available bandwidth"	Lack of Written Description; Lack of Enablement; Indefinite
All claims	"utilization of the available bandwidth of the first and second wireless transceivers does not prevent other wireless networking devices from utilizing a range of frequencies corresponding to the remaining portion of the bandwidth availability"	Lack of Written Description; Lack of Enablement; Indefinite

Asserted Claims[6]	Claim Term	Invalidity Based on 35 U.S.C. § 112
All claims	"interface[s]"	Lack of Written Description; Lack of Enablement; Indefinite
Claims 3 and 4	"specific subset of frequencies corresponding to the newly identified at least one portion of available bandwidth of the first wireless transceiver as well as the identified at least one portion of available bandwidth of the second wireless transceiver"	Lack of Written Description; Lack of Enablement; Indefinite
Claims 3 and 4	"if the identified at least one portion of the bandwidth of the [first/second] wireless transceiver becomes unavailable … or if it has an unidentified portion of bandwidth availability that is greater than its identified at least one portion of bandwidth availability … identify at least one new portion of the bandwidth of the [first/second] wireless transceiver that is available for communication"	Lack of Written Description; Lack of Enablement; Indefinite
Claim 3 and 4	"without requiring the disassociation of the recipient from the actual MAC and PHY interfaces [associated with/of] any wireless transceiver"	Lack of Written Description; Lack of Enablement; Indefinite
Claim 4	"specific subset of frequencies corresponding to the identified at least one portion of the bandwidth availability of the first wireless transceiver and the newly identified at least one portion of available bandwidth of the second wireless transceiver"	Lack of Written Description; Lack of Enablement; Indefinite
Claims 23 and 25	"wherein the at least one portion of the [first/second] bandwidth of the	Lack of Written Description; Lack of Enablement; Indefinite

Asserted Claims[6]	Claim Term	Invalidity Based on 35 U.S.C. § 112
	[first/second] transceiver comprises a single portion"	
Claims 24 and 26	"wherein the at least one portion of the [first/second] bandwidth of the [first/second] transceiver is contiguous"	Lack of Written Description; Lack of Enablement
Claim 30	"wherein the processing interface includes a bandwidth allocator"	Lack of Written Description; Lack of Enablement
Claims 18, 19, and 20	"the virtual MAC interface"	Indefinite
'143 Patent		
All claims	"wherein each of the first, second and third wireless transceivers … is adapted to emit radio waves in first, second and third bands of frequencies, the first and second frequency bands being different from each other"	Lack of Written Description; Lack of Enablement; Indefinite
All claims	"in a manner transparent to any layer of the wireless networking device above the processing interface"	Lack of Written Description; Lack of Enablement; Indefinite
All claims	"respectively request or create first, second and third associations between a first recipient and the first, second and third actual MAC and PHY interfaces"	Lack of Written Description; Lack of Enablement; Indefinite
All claims	"identify at least a portion of bandwidth available for communication of a [first/second] selected wireless transceiver of the first, second and third wireless transceivers"	Lack of Written Description; Lack of Enablement; Indefinite

Asserted Claims[6]	Claim Term	Invalidity Based on 35 U.S.C. § 112
All claims	"wherein the transmission of the first data stream to the first recipient occurs at least partially simultaneously with the reception of the data stream transmitted from the second recipient"	Lack of Written Description; Lack of Enablement; Indefinite
All claims	"specific subset of frequencies corresponding to the identified portion of the [available bandwidth/bandwidth available for communication] of the [first/second] selected wireless transceiver"	Lack of Written Description; Lack of Enablement; Indefinite
All claims	"utilization of the available bandwidth of the [first/second] selected wireless transceiver does not prevent other wireless networking devices from utilizing a range of frequencies corresponding to the remaining portion of the bandwidth availability"	Lack of Written Description; Lack of Enablement; Indefinite
All claims	"interface[s]"	Lack of Written Description; Lack of Enablement; Indefinite
Claim 12	"wherein the processing interface includes a bandwidth allocator"	Lack of Written Description; Lack of Enablement; Indefinite
Claims 13 and 15	"wherein the portion of the bandwidth available for communication of the [first/second] selected wireless transceiver comprises a single portion"	Lack of Written Description; Lack of Enablement; Indefinite
Claims 14 and 16	"wherein the portion of the bandwidth available for communication of the [first/second] selected wireless transceiver is contiguous"	Lack of Written Description; Lack of Enablement; Indefinite

Asserted Claims[6]	Claim Term	Invalidity Based on 35 U.S.C. § 112
Claims 19, 20, and 25	"specific subset of frequencies corresponding to the new portion of available bandwidth of the [first/second] selected wireless transceiver"	Lack of Written Description; Lack of Enablement; Indefinite
Claims 19, 20, and 25	"without requiring the disassociation of the recipient from the actual MAC and PHY interfaces [associated with/of] any wireless transceiver"	Lack of Written Description; Lack of Enablement; Indefinite
Claims 19, 20, and 25	"if the identified portion of the bandwidth of the [first/second] selected wireless transceiver becomes unavailable … or if the [first/second] selected wireless transceiver has an unidentified portion of bandwidth availability that is greater than the identified portion of bandwidth availability … identify at least one new portion of the bandwidth of the [first/second] selected wireless transceiver that is available for communication"	Lack of Written Description; Lack of Enablement; Indefinite
Claim 25	"at least one portion of the available bandwidth of the third wireless transceiver is aggregated with the identified portion of the available bandwidth of the first selected wireless transceiver"	Lack of Written Description; Lack of Enablement; Indefinite
Claim 30	"wherein the transmission of the first data stream to the first recipient occurs simultaneously with reception of the data stream transmitted from the second recipient"	Lack of Written Description; Lack of Enablement; Indefinite
Claims 19, 20, and 25	"the first and second applications"	Indefinite
Claims 8, 9, and 10	"the virtual MAC interface"	Indefinite

Asserted Claims[6]	Claim Term	Invalidity Based on 35 U.S.C. § 112
'105 Patent		
All claims	"the first and second wireless transceivers, respectively … are adapted to emit radio waves in first and second different bands of frequencies"	Lack of Written Description; Lack of Enablement; Indefinite
All claims	"in a manner transparent to any layer of the wireless networking device above the processing interface"	Lack of Written Description; Lack of Enablement; Indefinite
All claims	"request or create (i) a first association between a recipient and the first actual MAC and PHY interfaces and (ii) a second association between the recipient and the second actual MAC and PHY interfaces"	Lack of Written Description; Lack of Enablement
All claims	"without requiring disassociation of the recipient from either or both of the first and second actual MAC and PHY interfaces"	Lack of Written Description; Lack of Enablement; Indefinite
All claims	"identify at least one [first/second] portion of the [first/second] actual bandwidth of the [first/second] wireless transceiver … comprising a set of given resources"	Lack of Written Description; Lack of Enablement; Indefinite
All claims	"evaluate whether any of the given resources of the [first/second/third/fourth] identified [actual] bandwidth portion … are unavailable for communication"	Lack of Written Description; Lack of Enablement; Indefinite
All claims	"subset of frequencies corresponding to only the given resources of the [first/first and second/third/fourth] [identified] [actual] bandwidth	Lack of Written Description; Lack of Enablement; Indefinite

Asserted Claims[6]	Claim Term	Invalidity Based on 35 U.S.C. § 112
	portion[s] … that are not unavailable for communication"	
All claims	"utilization of the first [available/identified actual] bandwidth portion of the [first/second] wireless transceiver does not prevent any [other] wireless networking device device[s] from utilizing a range of frequencies corresponding to the remaining portion of the bandwidth availability"	Lack of Written Description; Lack of Enablement; Indefinite
All claims	"interface[s]"	Lack of Written Description; Lack of Enablement; Indefinite
Claim 10	"wherein the processing interface includes a bandwidth allocator"	Lack of Written Description; Lack of Enablement; Indefinite
Claims 11 and 15	"wherein the [first/second] identified actual bandwidth portion is contiguous"	Lack of Written Description; Lack of Enablement; Indefinite
Claims 14, 15, 16, and 17	"the first and second identified actual bandwidth portions not being contiguous with each other"	Lack of Written Description; Lack of Enablement; Indefinite
Claims 16 and 17	"if all of the given resources of the [first identified/second actual] bandwidth portion are unavailable, identify at least one [third/fourth] portion of the [first] actual bandwidth of the first wireless transceiver … comprising a set of given resources"	Lack of Written Description; Lack of Enablement; Indefinite
Claims 18, 19, and 20	"if none of the given resources of the first identified bandwidth portion of the first wireless transceiver are available for communication and if the first identified bandwidth portion of the second wireless transceiver is	Lack of Written Description; Lack of Enablement; Indefinite

Asserted Claims[6]	Claim Term	Invalidity Based on 35 U.S.C. § 112
	available for communication, use the second wireless transceiver to transmit the first data stream to the recipient"	
Claims 19 and 20	"if both the first identified actual bandwidth portions of the first and second wireless transceivers are available for communication, evaluate the data transfer characteristics of both"	Lack of Written Description; Lack of Enablement; Indefinite
Claims 19 and 20	"if the data transfer characteristics of the first identified [bandwidth] portion of the [first/second] wireless transceiver are better than those of the first identified bandwidth portion of the [second/first] wireless transceiver, use the [first/second] wireless transceiver to transmit the first data stream to the recipient"	Lack of Written Description; Lack of Enablement; Indefinite
Claim 20	"wherein the data transfer characteristics are representative of one or more environmental conditions"	Lack of Written Description; Lack of Enablement; Indefinite
Claims 21, 22, and 23	"at least partially simultaneously [transmit/receive]"	Lack of Written Description; Lack of Enablement; Indefinite
Claims 21, 22, and 23	"aggregate the first identified actual bandwidth portion of the first wireless transceiver with an identified first portion of an available bandwidth of the second wireless transceiver"	Lack of Written Description; Lack of Enablement; Indefinite
Claims 22 and 23	"receive a second data stream from the recipient"	Lack of Written Description; Lack of Enablement; Indefinite
Claims 23 and 30	"substantially simultaneously [received/transmitted]"	Lack of Written Description; Lack of Enablement; Indefinite

Asserted Claims[6]	Claim Term	Invalidity Based on 35 U.S.C. § 112
'976 Patent		
All claims	"the first and second wireless transceivers, respectively, … are adapted to emit radio signals in first and second different bands of frequencies"	Lack of Written Description; Lack of Enablement; Indefinite
All claims	"in a manner transparent to any layer of the wireless networking device above the processing interface"	Lack of Written Description; Lack of Enablement; Indefinite
All claims	"request or create (i) a first association between a recipient and the first actual MAC and PHY interfaces and (ii) a second association between the recipient and the second actual MAC and PHY interfaces"	Lack of Written Description; Lack of Enablement; Indefinite
All claims	"without requiring disassociation of [the recipient from] either or both of the first and second [actual MAC and PHY interfaces/associations]"	Lack of Written Description; Lack of Enablement; Indefinite
All claims	"identify at least one [first/second] portion of the [first/second] actual bandwidth of the [first/second] wireless transceiver … comprising a set of given resources"	Lack of Written Description; Lack of Enablement; Indefinite
All claims	"evaluate whether any of the given resources of the [first/second/third/fourth] identified [actual] bandwidth portion … are unavailable for communication"	Lack of Written Description; Lack of Enablement; Indefinite
All claims	"subset of frequencies corresponding to only the given resources of the [first/first and second/third/fourth] [identified] [actual] bandwidth	Lack of Written Description; Lack of Enablement; Indefinite

Asserted Claims[6]	Claim Term	Invalidity Based on 35 U.S.C. § 112
	portion[s] … that are not unavailable for communication"	
All claims	"utilization of the [at least one] first [available/identified actual] bandwidth portion[s] of the [first/second/first and second] wireless transceiver[s] does not prevent any [other] wireless networking device [devices] from utilizing a range of frequencies corresponding to the remaining portion of the bandwidth [availability/availabilities]"	Lack of Written Description; Lack of Enablement; Indefinite
All claims	"interface[s]"	Lack of Written Description; Lack of Enablement; Indefinite
Claim 10	"wherein the processing interface includes a bandwidth allocator"	Lack of Written Description; Lack of Enablement; Indefinite
Claims 11 and 15	"wherein the [first/second] identified actual bandwidth portion is contiguous"	Lack of Written Description; Lack of Enablement; Indefinite
Claims 14, 15, 16, and 17	"the first and second identified actual bandwidth portions not being contiguous with each other"	Lack of Written Description; Lack of Enablement; Indefinite
Claims 16 and 17	"if all of the given resources of the [first identified/second actual] bandwidth portion[s] are unavailable, identify at least one [third/fourth] portion of the [first] actual bandwidth of the first wireless transceiver … comprising a set of given resources"	Lack of Written Description; Lack of Enablement; Indefinite
Claims 18, 19, and 20	"if none of the given resources of the first identified bandwidth portion of the first wireless transceiver are available for communication and if the first identified bandwidth portion of	Lack of Written Description; Lack of Enablement; Indefinite

Asserted Claims[6]	Claim Term	Invalidity Based on 35 U.S.C. § 112
	the second wireless transceiver is available for communication, use the second wireless transceiver to transmit the first data stream to the recipient"	
Claims 19 and 20	"if both the first identified actual bandwidth portions of the first and second wireless transceivers are available for communication, evaluate the data transfer characteristics of both"	Lack of Written Description; Lack of Enablement; Indefinite
Claims 19 and 20	"if the data transfer characteristics of the first identified [bandwidth] portion of the [first/second] wireless transceiver are better than those of the first identified bandwidth portion of the [second/first] wireless transceiver, use the [first/second] wireless transceiver to transmit the first data stream to the recipient"	Lack of Written Description; Lack of Enablement; Indefinite
Claim 20	"wherein the data transfer characteristics are representative of one or more environmental conditions"	Lack of Written Description; Lack of Enablement; Indefinite
Claims 21, 22, 23, and 24	"aggregate the first identified actual bandwidth portion of the first wireless transceiver with an identified first portion of an available bandwidth of the second wireless transceiver"	Lack of Written Description; Lack of Enablement; Indefinite
Claims 21, 22, 23, 24, 25, 26, 27, 28, 29, and 30	"at least partially simultaneously [transmit/receive]"	Lack of Written Description; Lack of Enablement; Indefinite
Claims 22, 24, and 26	"substantially simultaneously [transmitted/received]"	Lack of Written Description; Lack of Enablement; Indefinite

Asserted Claims[6]	Claim Term	Invalidity Based on 35 U.S.C. § 112
Claims 23, 24, 25, 26, 27, 28, 29, and 30	"receive a second data stream from the recipient"	Lack of Written Description; Lack of Enablement; Indefinite
Claims 25, 26, 27, 28, 29, and 30	"evaluate whether any of the given resources of the at least one first [and] identified portions of the [first/second/first and second] wireless transceiver[s] are not unavailable for communication"	Lack of Written Description; Lack of Enablement; Indefinite
Claims 25, 26, 27, 28, 29, and 30	"identify at least one [first/second] portion of bandwidth available for communication of the [second/first] wireless transceiver … comprising a set of given resources"	Lack of Written Description; Lack of Enablement; Indefinite
Claims 25, 26, 27, 28, 29, and 30	"specific subset of frequencies corresponding to [only] the given resources of the identified at least one [first/first and second] bandwidth portion of the [first/second] wireless transceiver that are not unavailable for communication"	Lack of Written Description; Lack of Enablement; Indefinite
Claims 27 and 28	"[start/end] of the reception of the second data stream by the second wireless transceiver is substantially simultaneous with the [start/end] of the transmission of the first data stream from the first wireless transceiver"	Lack of Written Description; Lack of Enablement; Indefinite
Claim 30	"the second application"	Indefinite
'933 Patent		
All claims	"the first and second wireless transceivers, respectively, … are adapted to emit radio signals in first and second different bands of frequencies"	Lack of Written Description; Lack of Enablement; Indefinite

Asserted Claims[6]	Claim Term	Invalidity Based on 35 U.S.C. § 112
All claims	"in a manner transparent to any layer of the wireless networking device above the processing interface"	Lack of Written Description; Lack of Enablement; Indefinite
All claims	"request or create (i) a first association between a recipient and the first actual MAC and PHY interfaces and (ii) a second association between the recipient and the second actual MAC and PHY interfaces"	Lack of Written Description; Lack of Enablement; Indefinite
All claims	"without requiring disassociation of [the recipient from] either or both of the first and second [actual MAC and PHY interfaces/associations]"	Lack of Written Description; Lack of Enablement; Indefinite
All claims	"identify at least one [first/second] portion of the [first/second] actual bandwidth of the [first/second] wireless transceiver … comprising a set of given resources"	Lack of Written Description; Lack of Enablement; Indefinite
All claims	"evaluate whether any of the given resources of the [first/second/third/fourth] identified [actual] bandwidth portion… are unavailable for communication"	Lack of Written Description; Lack of Enablement; Indefinite
All claims	"subset of frequencies corresponding to only the given resources of the [first/first and second/third/fourth] [identified] [actual] bandwidth portion[s] … that are not unavailable for communication"	Lack of Written Description; Lack of Enablement; Indefinite
All claims	"utilization of the first [available/identified actual] bandwidth portion of the [first/second] wireless transceiver does not prevent any [other] wireless networking device device[s] from utilizing a range of frequencies corresponding to the	Lack of Written Description; Lack of Enablement; Indefinite

Asserted Claims[6]	Claim Term	Invalidity Based on 35 U.S.C. § 112
	remaining portion of the bandwidth availability"	
All claims	"interface[s]"	Lack of Written Description; Lack of Enablement; Indefinite
Claim 10	"wherein the processing interface includes a bandwidth allocator"	Lack of Written Description; Lack of Enablement; Indefinite
Claims 11 and 15	"wherein the [first/second] identified actual bandwidth portion is contiguous"	Lack of Written Description; Lack of Enablement; Indefinite
Claims 14, 15, 16, and 17	"the first and second identified actual bandwidth portions not being contiguous with each other"	Lack of Written Description; Lack of Enablement; Indefinite
Claims 16 and 17	"if all of the given resources of the [first identified/second actual] bandwidth portion[s] are unavailable, identify at least one [third/fourth] portion of the [first] actual bandwidth of the first wireless transceiver … comprising a set of given resources"	Lack of Written Description; Lack of Enablement; Indefinite
Claims 18, 19, and 20	"if none of the given resources of the first identified bandwidth portion of the first wireless transceiver are available for communication and if the first identified bandwidth portion of the second wireless transceiver is available for communication, use the second wireless transceiver to transmit the first data stream to the recipient"	Lack of Written Description; Lack of Enablement; Indefinite
Claims 19 and 20	"if both the first identified actual bandwidth portions of the first and second wireless transceivers are available for communication, evaluate	Lack of Written Description; Lack of Enablement; Indefinite

Asserted Claims[6]	Claim Term	Invalidity Based on 35 U.S.C. § 112
	the data transfer characteristics of both"	
Claims 19 and 20	"if the data transfer characteristics of the first identified [bandwidth] portion of the [first/second] wireless transceiver are better than those of the first identified bandwidth portion of the [second/first] wireless transceiver, use the [first/second] wireless transceiver to transmit the first data stream to the recipient"	Lack of Written Description; Lack of Enablement; Indefinite
Claim 20	"wherein the data transfer characteristics are representative of one or more environmental conditions"	Lack of Written Description; Lack of Enablement; Indefinite
Claims 21, 22, 23, and 24	"at least partially simultaneously [transmit/receive]"	Lack of Written Description; Lack of Enablement; Indefinite
Claims 21, 22, 23, and 24	"aggregate the first identified actual bandwidth portion of the first wireless transceiver with an identified first portion of an available bandwidth of the second wireless transceiver"	Lack of Written Description; Lack of Enablement; Indefinite
Claims 22 and 24	"substantially simultaneously [transmitted/received]"	Lack of Written Description; Lack of Enablement; Indefinite
Claims 23 and 24	"receive a second data stream from the recipient"	Lack of Written Description; Lack of Enablement; Indefinite
Claims 25, 26, 27, 28, 29, and 30	"specific subset of frequencies corresponding to the given resources of the identified at least one [first/first and second] bandwidth portion of the [first/second] wireless transceiver that are not unavailable for communication"	Lack of Written Description; Lack of Enablement; Indefinite

Asserted Claims[6]	Claim Term	Invalidity Based on 35 U.S.C. § 112
Claims 25, 26, 27, 28, 29, and 30	"receive a second data stream from the recipient at least partially simultaneously with the first data stream being transmitted to the recipient"	Lack of Written Description; Lack of Enablement; Indefinite
Claims 25, 26, 27, 28, 29, and 30	"evaluate whether any of the given resources of the at least one first [and] identified portions of the [first/first and second/second] wireless transceiver[s] are not unavailable for communication"	Lack of Written Description; Lack of Enablement; Indefinite
Claims 25, 26, 27, 28, 29, and 30	"identify at least one [first/second] portion of bandwidth available for communication of the [second/first] wireless transceiver … comprising a set of given resources"	Lack of Written Description; Lack of Enablement; Indefinite
Claim 26	"wherein the second data stream is received by the second wireless transceiver substantially simultaneously with the transmission of the first data stream from the first wireless transceiver"	Lack of Written Description; Lack of Enablement; Indefinite
Claims 27 and 28	"[start/end] of the reception of the second data stream by the second wireless transceiver is substantially simultaneous with the [start/end] of the transmission of the first data stream from the first wireless transceiver"	Lack of Written Description; Lack of Enablement; Indefinite
Claim 30	"the second application"	Indefinite
'177 Patent		
All claims	"the first, second and third wireless transceivers, respectively, … are adapted to emit radio signals in first, second, and third bands of frequencies,	Lack of Written Description; Lack of Enablement; Indefinite

Asserted Claims[6]	Claim Term	Invalidity Based on 35 U.S.C. § 112
	at least two of the first, second and third bands of frequencies being different"	
All claims	"in a manner transparent to any layer of the wireless networking device above the processing interface"	Lack of Written Description; Lack of Enablement; Indefinite
All claims	"request or create (i) a first association between a recipient and the first actual MAC and PHY interfaces, (ii) a second association between the recipient and the second actual MAC and PHY interfaces, and (iii) a third association between the recipient and the third actual MAC and PHY interfaces"	Lack of Written Description; Lack of Enablement; Indefinite
All claims	"without requiring disassociation of [the recipient from] any of the first, second and third [actual MAC and PHY interfaces/associations]"	Lack of Written Description; Lack of Enablement; Indefinite
All claims	"identify at least one first portion of the [first/second] actual bandwidth of the [first/second] wireless transceiver … comprising a set of given resources"	Lack of Written Description; Lack of Enablement; Indefinite
All claims	"evaluate whether any of the given resources of the first identified actual bandwidth portion … are unavailable for communication"	Lack of Written Description; Lack of Enablement; Indefinite
All claims	"receive a second data stream from the recipient"	Lack of Written Description; Lack of Enablement; Indefinite
All claims	"subset of frequencies corresponding to only the given resources of the first	Lack of Written Description; Lack of Enablement; Indefinite

Asserted Claims[6]	Claim Term	Invalidity Based on 35 U.S.C. § 112
	bandwidth portion … that are not unavailable for communication"	
All claims	"resource monitoring interface"	Lack of Written Description; Lack of Enablement; Indefinite
All claims	"utilization of the first available bandwidth portion of the [first/second] wireless transceiver does not prevent any wireless networking device from utilizing a range of frequencies corresponding to the remaining portion of the bandwidth availability"	Lack of Written Description; Lack of Enablement; Indefinite
All claims	"interface[s]"	Lack of Written Description; Lack of Enablement; Indefinite
Claim 9	"multiple resource monitoring interfaces"	Lack of Written Description; Lack of Enablement; Indefinite
Claim 11	"wherein the processing interface includes a bandwidth allocator"	Lack of Written Description; Lack of Enablement; Indefinite
Claim 12	"wherein the first identified actual bandwidth portion is contiguous"	Lack of Written Description; Lack of Enablement; Indefinite
Claims 14 and 17	"at least partially simultaneously [transmit/receive]"	Lack of Written Description; Lack of Enablement; Indefinite
Claims 14, 15, 16, 17, 18, and 19	"aggregate the [first/second] identified actual bandwidth portion of the [first/second] wireless transceiver with an identified first portion of an available bandwidth of the third wireless transceiver"	Lack of Written Description; Lack of Enablement; Indefinite
Claims 15 and 18	"substantially simultaneously [transmitted/received]"	Lack of Written Description; Lack of Enablement; Indefinite

Asserted Claims[6]	Claim Term	Invalidity Based on 35 U.S.C. § 112
Claims 16 and 19	"wherein the identified first portion of the available bandwidth of the third wireless transceiver is contiguous"	Lack of Written Description; Lack of Enablement; Indefinite
Claims 20 and 21	"specific subset of frequencies corresponding to the given resources of the identified first and second bandwidth portions of the first wireless transceiver that are not unavailable for communication"	Lack of Written Description; Lack of Enablement; Indefinite
Claims 20 and 21	"identify at least one second portion of bandwidth available for communication of the first wireless transceiver … comprising a set of given resources"	Lack of Written Description; Lack of Enablement; Indefinite
Claims 20 and 21	"evaluate whether any of the given resources of the first and second identified bandwidth portions of the first wireless transceiver are not unavailable for communication"	Lack of Written Description; Lack of Enablement; Indefinite
Claim 21	"wherein the first and second identified bandwidth portions of the first wireless transceiver are not contiguous"	Lack of Written Description; Lack of Enablement; Indefinite
Claims 25 and 26	"wherein the transmission of the first data stream to the recipient occurs at least partially simultaneously with the reception of the second data stream from the recipient"	Lack of Written Description; Lack of Enablement; Indefinite
Claims 26	"wherein the transmission of the first data stream to the recipient occurs simultaneously with the reception of the second data stream from the recipient"	Lack of Written Description; Lack of Enablement; Indefinite

Asserted Claims[6]	Claim Term	Invalidity Based on 35 U.S.C. § 112
'756 Patent		
All claims	"wherein the first and second wireless transceivers … are adapted to respectively emit radio waves in first and second different bands of frequencies"	Lack of Written Description; Lack of Enablement; Indefinite
All claims	"in a manner transparent to any layer of the wireless networking device above the processing interface"	Lack of Written Description; Lack of Enablement; Indefinite
All claims	"request or create a first association between a recipient and the first actual MAC and PHY interfaces and a second association between the recipient and the second actual MAC and PHY interfaces"	Lack of Written Description; Lack of Enablement; Indefinite
All claims	"use the information provided to it by the resource monitoring interface to make allocation decisions with respect to first and second bandwidth availabilities"	Lack of Written Description; Lack of Enablement; Indefinite
All claims	"resource monitoring interface"	Lack of Written Description; Lack of Enablement; Indefinite
All claims	"interface[s]"	Lack of Written Description; Lack of Enablement; Indefinite
Claim 10	"multiple resource monitoring interfaces"	Lack of Written Description; Lack of Enablement; Indefinite
Claim 12	"wherein the processing interface comprises a bandwidth allocator"	Lack of Written Description; Lack of Enablement; Indefinite
Claims 15 and 16	"wherein the information provided by the resource monitoring interface to the virtual MAC interface is received by the resource monitoring interface	Lack of Written Description; Lack of Enablement; Indefinite

Asserted Claims[6]	Claim Term	Invalidity Based on 35 U.S.C. § 112
	directly from at least one of the first and second actual [PHY/MAC] interfaces"	
Claim 17	"wherein the allocation decisions involve use of at least some of the first and second bandwidth availabilities"	Lack of Written Description; Lack of Enablement; Indefinite
Claims 18, 19, 20, 21, 22, 23, 24, 25, 26, 27, 28, 29, and 30	"identify at least one portion of the actual bandwidth of one of the first and second wireless transceivers … comprising a set of given resources"	Lack of Written Description; Lack of Enablement; Indefinite
Claims 18, 19, 20, 21, 22, 23, 24, 25, 26, 27, 28, 29, and 30	"transmit the data stream to the recipient using only the given resources of the identified bandwidth portion that are not unavailable"	Lack of Written Description; Lack of Enablement; Indefinite
Claims 19, 20, and 21	"evaluate at least one data transfer characteristic"	Lack of Written Description; Lack of Enablement; Indefinite
Claims 19, 20, and 21	"transmit the data stream to the recipient using the first identified bandwidth portion of either the first or second wireless transceiver based upon a comparison of the evaluated data transfer characteristics"	Lack of Written Description; Lack of Enablement; Indefinite
Claims 20 and 21	"wherein the evaluation of the at least one data transfer characteristic comprises evaluation of bandwidth unavailability"	Lack of Written Description; Lack of Enablement; Indefinite
Claim 21	"wherein the evaluation of the at least one data transfer characteristic comprises evaluation of bandwidth unavailability and received signal strength of at least one communication from the recipient"	Lack of Written Description; Lack of Enablement; Indefinite

Asserted Claims[6]	Claim Term	Invalidity Based on 35 U.S.C. § 112
Claims 22 and 23	"wherein the first identified bandwidth portion of the [first/second] wireless transceiver comprises two non-contiguous portions"	Lack of Written Description; Lack of Enablement; Indefinite
Claim 24	"wherein the allocation decisions are based at least upon a signal type associated with the data stream"	Lack of Written Description; Lack of Enablement; Indefinite
Claim 25	"aggregate a first identified bandwidth portion of the first wireless transceiver with a first identified bandwidth portion of the second wireless transceiver"	Lack of Written Description; Lack of Enablement; Indefinite
Claims 26, 27, 28, 29, and 30	"wherein the processing interface is configured to … transmit the data stream to the recipient using the first wireless transceiver and to receive a second data stream that is transmitted from the recipient using the second transceiver"	Lack of Written Description; Lack of Enablement; Indefinite
Claims 27, 28, 29, and 30	"wherein the transmission of the data stream from the first wireless transceiver is at least partially simultaneous with the reception of the second data stream by the second wireless transceiver"	Lack of Written Description; Lack of Enablement; Indefinite
Claim 28	"wherein the transmission of the data stream from the first wireless transceiver is simultaneous with the reception of the second data stream by the second wireless transceiver"	Lack of Written Description; Lack of Enablement; Indefinite
Claims 29 and 30	"wherein a first identified portion of a bandwidth availability of a third wireless transceiver is aggregated with the first identified portion of the bandwidth of the [first/second]	Lack of Written Description; Lack of Enablement; Indefinite

Asserted Claims[6]	Claim Term	Invalidity Based on 35 U.S.C. § 112
	wireless transceiver to [transmit/receive]"	
'198 Patent		
All claims	"wherein the first and second wireless transceivers … are adapted to respectively emit radio waves in first and second different bands of frequencies"	Lack of Written Description; Lack of Enablement; Indefinite
All claims	"in a manner transparent to any layer of the wireless networking device above the processing interface"	Lack of Written Description; Lack of Enablement; Indefinite
All claims	"request or create a first association between a recipient and the first actual MAC and PHY interfaces and a second association between the recipient and the second actual MAC and PHY interfaces"	Lack of Written Description; Lack of Enablement; Indefinite
All claims	"use the information provided to it by the resource monitoring interface to make allocation decisions with respect to first and second bandwidth availabilities"	Lack of Written Description; Lack of Enablement; Indefinite
All claims	"resource monitoring interface"	Lack of Written Description; Lack of Enablement; Indefinite
All claims	"interface[s]"	Lack of Written Description; Lack of Enablement; Indefinite
Claim 10	"multiple resource monitoring interfaces"	Lack of Written Description; Lack of Enablement; Indefinite
Claim 12	"wherein the processing interface comprises a bandwidth allocator"	Lack of Written Description; Lack of Enablement; Indefinite

Asserted Claims[6]	Claim Term	Invalidity Based on 35 U.S.C. § 112
Claims 15 and 16	"wherein the information provided by the resource monitoring interface to the virtual MAC interface is received by the resource monitoring interface directly from at least one of the first and second actual [PHY/MAC] interfaces"	Lack of Written Description; Lack of Enablement; Indefinite
Claim 17	"wherein the allocation decisions involve use of at least some of the first and second bandwidth availabilities"	Lack of Written Description; Lack of Enablement; Indefinite
Claims 18, 19, 20, 21, 22, 23, 24, 25, 26, 27, 28, 29, and 30	"identify at least one portion of the actual bandwidth of one of the first and second wireless transceivers … comprising a set of given resources"	Lack of Written Description; Lack of Enablement; Indefinite
Claims 18, 19, 20, 21, 22, 23, 24, 25, 26, 27, 28, 29, and 30	"transmit the data stream to the recipient using only the given resources of the identified bandwidth portion that are not unavailable"	Lack of Written Description; Lack of Enablement; Indefinite
Claims 19, 20, and 21	"evaluate at least one data transfer characteristic"	Lack of Written Description; Lack of Enablement; Indefinite
Claims 19, 20, and 21	"transmit the data stream to the recipient using the first identified bandwidth portion of either the first or second wireless transceiver based upon a comparison of the evaluated data transfer characteristics"	Lack of Written Description; Lack of Enablement; Indefinite
Claims 20 and 21	"wherein the evaluation of the at least one data transfer characteristic comprises evaluation of bandwidth unavailability"	Lack of Written Description; Lack of Enablement; Indefinite
Claim 21	"wherein the evaluation of the at least one data transfer characteristic comprises evaluation of bandwidth unavailability and received signal	Lack of Written Description; Lack of Enablement; Indefinite

Asserted Claims[6]	Claim Term	Invalidity Based on 35 U.S.C. § 112
	strength of at least one communication from the recipient"	
Claims 22 and 23	"wherein the first identified bandwidth portion of the [first/second] wireless transceiver comprises two non-contiguous portions"	Lack of Written Description; Lack of Enablement; Indefinite
Claim 24	"wherein the allocation decisions are based at least upon a signal type associated with the data stream"	Lack of Written Description; Lack of Enablement; Indefinite
Claim 25	"aggregate a first identified bandwidth portion of the first wireless transceiver with a first identified portion of the second wireless transceiver"	Lack of Written Description; Lack of Enablement; Indefinite
Claims 26, 27, 28, 29, and 30	"wherein the processing interface is configured to … transmit the data stream to the recipient using the first wireless transceiver and to receive a second data stream that is transmitted from the recipient using the second transceiver"	Lack of Written Description; Lack of Enablement; Indefinite
Claims 27, 28, 29, and 30	"wherein the transmission of the data stream from the first wireless transceiver is at least partially simultaneous with the reception of the second data stream by the second wireless transceiver"	Lack of Written Description; Lack of Enablement; Indefinite
Claim 28	"wherein the transmission of the data stream from the first wireless transceiver is simultaneous with the reception of the second data stream by the second wireless transceiver"	Lack of Written Description; Lack of Enablement; Indefinite
Claims 29 and 30	"wherein a first identified portion of a bandwidth availability of a third wireless transceiver is aggregated with	Lack of Written Description; Lack of Enablement; Indefinite

Asserted Claims[6]	Claim Term	Invalidity Based on 35 U.S.C. § 112
	the first identified portion of the bandwidth of the [first/second] wireless transceiver to [transmit/receive]"	
'564 Patent		
All claims	"the first and second wireless transceivers, respectively, … are adapted to emit radio waves in first and second different bands of frequencies"	Lack of Written Description; Lack of Enablement; Indefinite
All claims	"in a manner transparent to any layer of the wireless networking device above the processing interface"	Lack of Written Description; Lack of Enablement; Indefinite
All claims	"request or create (i) a first association between a recipient and the first actual MAC and PHY interfaces and (ii) a second association between the recipient and the second actual MAC and PHY interfaces"	Lack of Written Description; Lack of Enablement; Indefinite
All claims	"without requiring disassociation of [the recipient from] either or both of the first and second [actual MAC and PHY interfaces/associations]"	Lack of Written Description; Lack of Enablement; Indefinite
All claims	"identify at least one [first and second/first] portion[s] of the [first/second] actual bandwidth of the [first/second] wireless transceiver … [having/comprising] a set of given resources"	Lack of Written Description; Lack of Enablement; Indefinite
All claims	"if the data transfer characteristics of the first identified bandwidth portion are better than those of the second identified bandwidth portion, use the	Lack of Written Description; Lack of Enablement; Indefinite

Asserted Claims[6]	Claim Term	Invalidity Based on 35 U.S.C. § 112
	first wireless transceiver to transmit the first data stream to the recipient"	
All claims	"evaluate [the] data transfer characteristics"	Lack of Written Description; Lack of Enablement; Indefinite
All claims	"subset of frequencies corresponding to only the given resources of the [first/second] identified bandwidth portion … that are available for communication"	Lack of Written Description; Lack of Enablement; Indefinite
All claims	"resource monitoring interface"	Lack of Written Description; Lack of Enablement; Indefinite
All claims	"utilization of the first and second identified bandwidth portions do not prevent any wireless networking device from utilizing a range of frequencies corresponding to the remaining portion of the bandwidth availability"	Lack of Written Description; Lack of Enablement; Indefinite
All claims	"interface[s]"	Lack of Written Description; Lack of Enablement; Indefinite
Claim 8	"multiple resource monitoring interfaces"	Lack of Written Description; Lack of Enablement; Indefinite
Claim 10	"wherein the processing interface includes a bandwidth allocator"	Lack of Written Description; Lack of Enablement; Indefinite
Claim 12	"wherein the second identified actual bandwidth portion is contiguous"	Lack of Written Description; Lack of Enablement; Indefinite
Claims 14 and 17	"wherein the data transfer characteristics … are representative of one or more environmental conditions"	Lack of Written Description; Lack of Enablement; Indefinite

Asserted Claims[6]	Claim Term	Invalidity Based on 35 U.S.C. § 112
Claim 15	"aggregate the first and second identified actual bandwidth portions"	Lack of Written Description; Lack of Enablement; Indefinite
Claims 15, 18, 19, 20, 21, 26, 27, 28, and 29	"at least partially simultaneously [transmit/receive]"	Lack of Written Description; Lack of Enablement; Indefinite
Claims 16 and 17	"if the data transfer characteristics of the first identified [bandwidth] portion of the [first/second] wireless transceiver are better than the data transfer characteristics of the first identified bandwidth portion of the [second/first] wireless transceiver, use the [first/second] wireless transceiver to transmit the first data stream to the recipient"	Lack of Written Description; Lack of Enablement; Indefinite
Claims 16, 17, 18, 19, 20, 21, 22, 23, 24, 25, 26, 27, 28, and 29	"utilization of the first identified available bandwidth portion of the second wireless transceiver does not prevent any wireless networking device from utilizing a range of frequencies corresponding to the remaining portion of the bandwidth availability"	Lack of Written Description; Lack of Enablement; Indefinite
Claims 18, 19, 20, 21, 22, 23, 24, 25, 26, 27, 28, and 29	"identify at least one first portion of the second actual bandwidth of the second wireless transceiver, wherein the first identified bandwidth portion of the second wireless transceiver comprises a set of given resources"	Lack of Written Description; Lack of Enablement; Indefinite
Claims 18, 19, 20, 21, 28, and 29	"aggregate the given resources of the [first/first and second] identified [actual] bandwidth portion[s] of the first wireless transceiver that are available for communication [with the given resources of the first identified bandwidth portion of the second	Lack of Written Description; Lack of Enablement; Indefinite

Asserted Claims[6]	Claim Term	Invalidity Based on 35 U.S.C. § 112
	wireless transceiver that are available for communication]"	
Claims 19, 21, 27, and 29	"substantially simultaneously [transmitted/received]"	Lack of Written Description; Lack of Enablement; Indefinite
Claims 20 and 21	"receive a second data stream from the recipient"	Lack of Written Description; Lack of Enablement; Indefinite
Claims 22, 23, 24, 25, 26, 27, 28, and 29	"receive a second data stream from the recipient at least partially simultaneously with the first data stream being transmitted to the recipient"	Lack of Written Description; Lack of Enablement; Indefinite
Claims 22, 23, 24, 25, 26, 27, 28, and 29	"specific subset of frequencies corresponding to [only] the given resources of the first identified bandwidth portion of the [first/second] wireless transceiver that are available for communication"	Lack of Written Description; Lack of Enablement; Indefinite
Claim 23	"wherein the second data stream is received by the second wireless transceiver substantially simultaneously with the transmission of the first data stream from the first wireless transceiver"	Lack of Written Description; Lack of Enablement; Indefinite
Claims 24 and 25	"[start/end] of the reception of the second data stream … is substantially simultaneous with the [start/end] of the transmission of the first data stream"	Lack of Written Description; Lack of Enablement; Indefinite
Claims 26 and 27	"aggregate at least one first portion of an actual bandwidth of a third wireless transceiver with the given resources of the first identified bandwidth portion	Lack of Written Description; Lack of Enablement; Indefinite

Asserted Claims[6]	Claim Term	Invalidity Based on 35 U.S.C. § 112
	of the second wireless transceiver that are available for communication"	

Samsung reserves the right to modify, amend, or supplement its contentions relating to 35 U.S.C. § 112 as the case progresses, including in view of any claim construction orders entered by the Court in this matter.

VIII. INVALIDITY UNDER 35 U.S.C. § 101

Pursuant to Judge Gilstrap's Standing Order, Exhibits 591-101, 337-101, 414-101, 143-101, 105-101, 976-101, 933-101, 177-101, 756-101, 198-101, and 564-101 provide charts identifying (1) each exception to eligibility (e.g., abstract idea, law of nature, and natural phenomenon) to which each Asserted Claim of the Asserted Patents is directed and the factual and legal basis therefor; (2) whether one or more of the Asserted Claims of the Asserted Patents are representative of any other claims; (3) a description of the industry, at the relevant time, in which the Asserted Claims of the Asserted Patents are alleged to be well understood, routine, and conventional, and the factual and legal basis therefor; (4) a description of how each element of the Asserted Claims of the Asserted Patents, both individually and in combination with the other elements of that claim, was well understood, routine, conventional, in the relevant industry at the relevant time, and the legal and factual basis therefor; and (5) any other factual or legal basis for how the Asserted Claims of the Asserted Patents are otherwise ineligible for patent protection.

These Ineligibility Contentions, like the rest of these Invalidity Contentions and the exhibits hereto, are based on the facts and law currently available to Samsung, and Samsung reserves the right to update these contentions in light of additional cases and guidance as they become available, the Court's claim construction order, or positions XiFi takes on infringement.

IX. DOCUMENT PRODUCTION ACCOMPANYING INVALIDITY CONTENTIONS

With these Invalidity Contentions and Subject Matter Eligibility Contentions, Samsung produces the documents required under Local Patent Rule 3-4 and the Standing Order Regarding Subject Matter Eligibility Contentions Applicable to All Patent Infringement Cases Assigned to Chief District Judge Rodney Gilstrap, as ordered on 25 July, 2019.

Dated: June 18, 2025 *_/s/Patrick T. Schmidt_____*

Sean Pak (*pro hac vice*)
seanpak@quinnemanuel.com
QUINN EMANUEL URQUHART & SULLIVAN, LLP
50 California Street, 22nd Floor
San Francisco, California 94111
Telephone: (415) 875-6600
Facsimile: (415) 875-6700

Patrick T. Schmidt (*pro hac vice*)
patrickschmidt@quinnemanuel.com
QUINN EMANUEL URQUHART & SULLIVAN, LLP
865 S. Figueroa St., 10th Floor
Los Angeles, California 90017
Telephone: (213) 443-3100
Facsimile: (213) 443-3900

Kevin Hardy
D.C. Bar No. 473941 (admitted in E.D. Tex.)
kevinhardy@quinnemanuel.com
QUINN EMANUEL URQUHART & SULLIVAN, LLP
1300 I Street, N.W., Suite 900
Washington, DC 20005
Telephone: (202) 538-8000
Facsimile: (202) 538-8100
Attorney for Defendants
Samsung Electronics America, Inc. and
Samsung Electronics Co., Ltd.

CERTIFICATE OF SERVICE

Pursuant to the Federal Rules of Civil Procedure and Local Rule CV-5, I hereby certify that, on June 18, 2025, all counsel of record who have appeared in this case are being served with a copy of the foregoing via email.

Dated: June 18, 2025 *<u>/s/Joseph LeRoy</u>*
Joseph LeRoy