US 20140298492A1

(19) United States
(12) Patent Application Publication
Simpson

(10) Pub. No.: US 2014/0298492 A1
(43) Pub. Date: Oct. 2, 2014

(54) **SECURITY CASE**

(71) Applicant: **Rollaguard Security, LLC**, Lake Park, FL (US)

(72) Inventor: **Anthony T. Simpson**, Lake Park, FL (US)

(73) Assignee: **Rollaguard Security, LLC**, Lake Park, FL (US)

(21) Appl. No.: **14/214,439**

(22) Filed: **Mar. 14, 2014**

Related U.S. Application Data

(60) Provisional application No. 61/800,958, filed on Mar. 15, 2013.

Publication Classification

(51) **Int. Cl.**
G06F 21/86 (2006.01)

(52) **U.S. Cl.**
CPC *G06F 21/86* (2013.01)
USPC **726/35**

(57) **ABSTRACT**

The present invention is a self contained, portable security case or container. The case is secure in its locked condition by locks which are preferably operated by an electronic key. The electronic key can be programmed to open the case or container dependent upon various different conditions, for example, location, time, identification of operator, etc. In addition to the electronic key, a biometric identification device can be employed. The exterior of the case or container is made from different materials which are impermeable and resistant to heat, drilling and ballistic impact. A GPS type of location device located within the case enables the case to be tracked from remote locations.

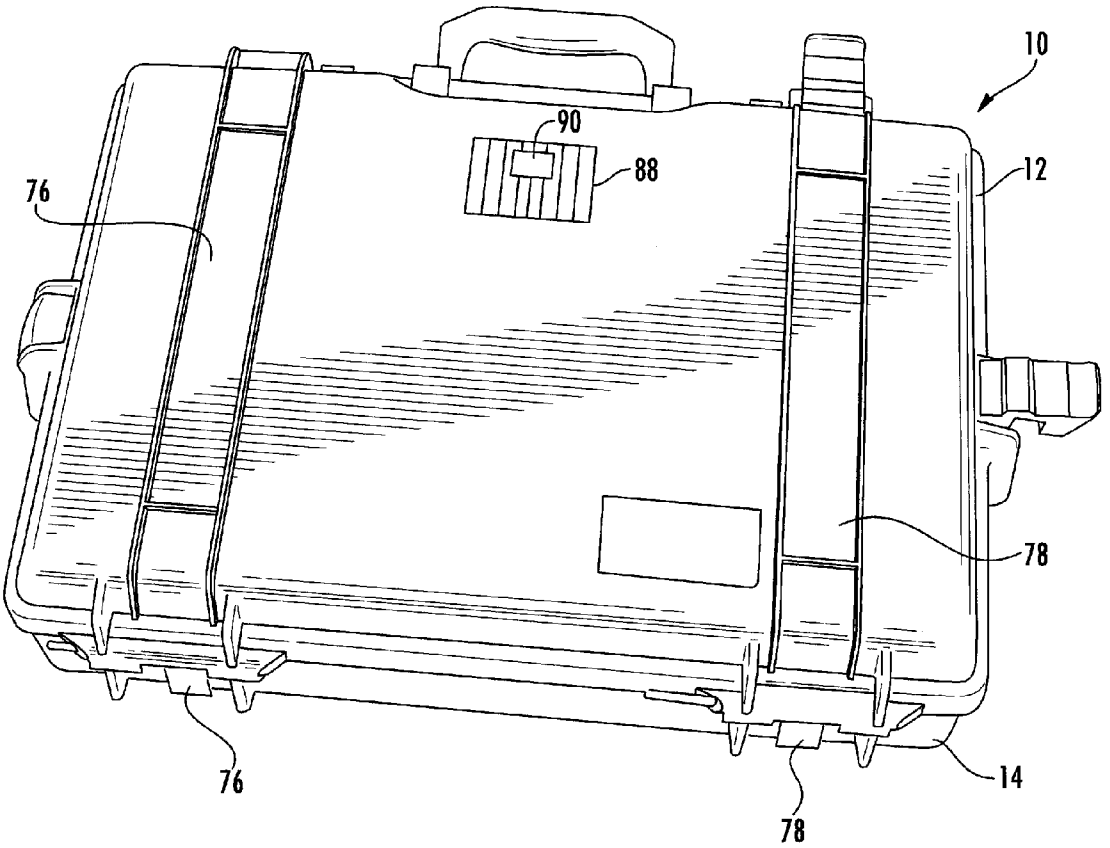

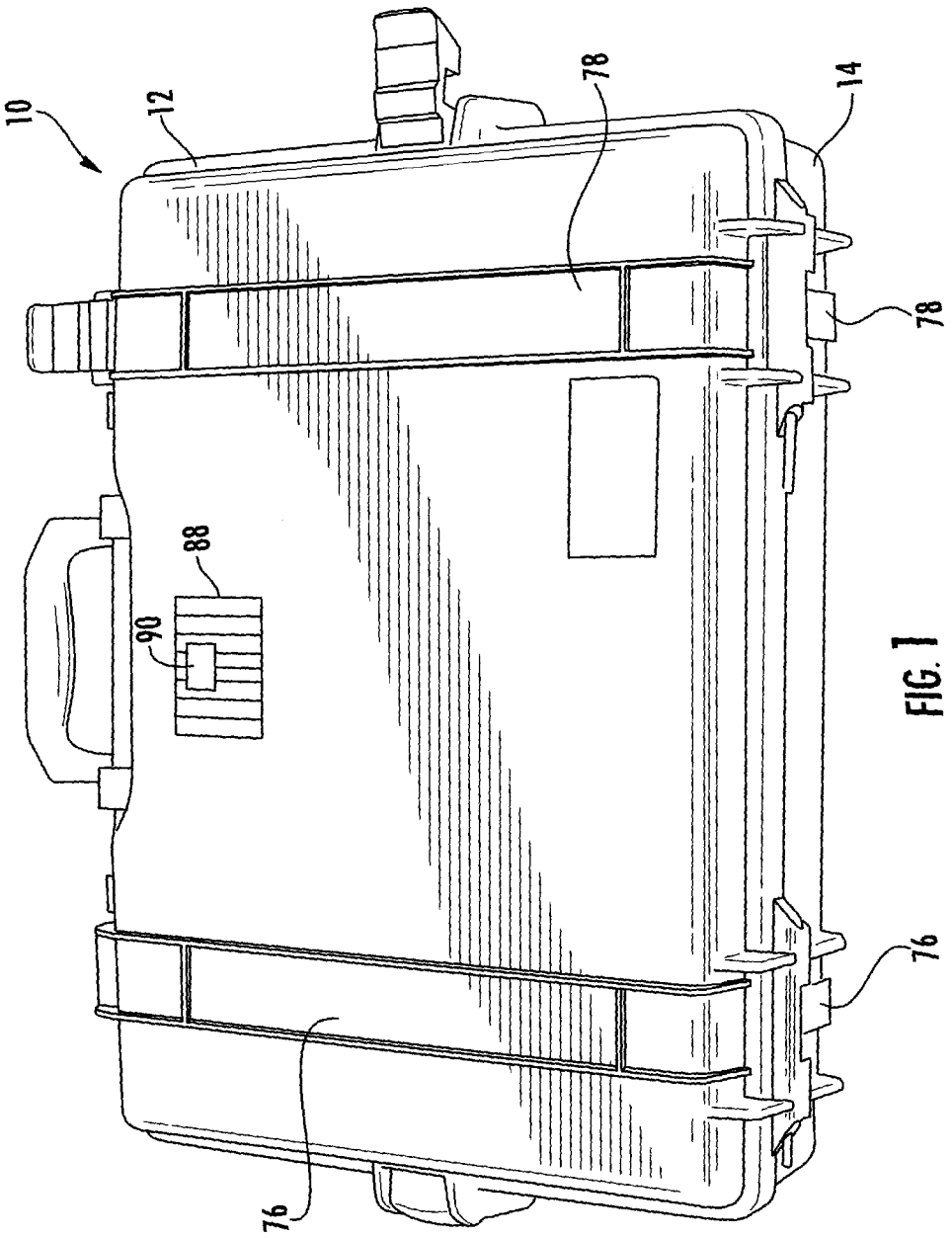

FIG. 1

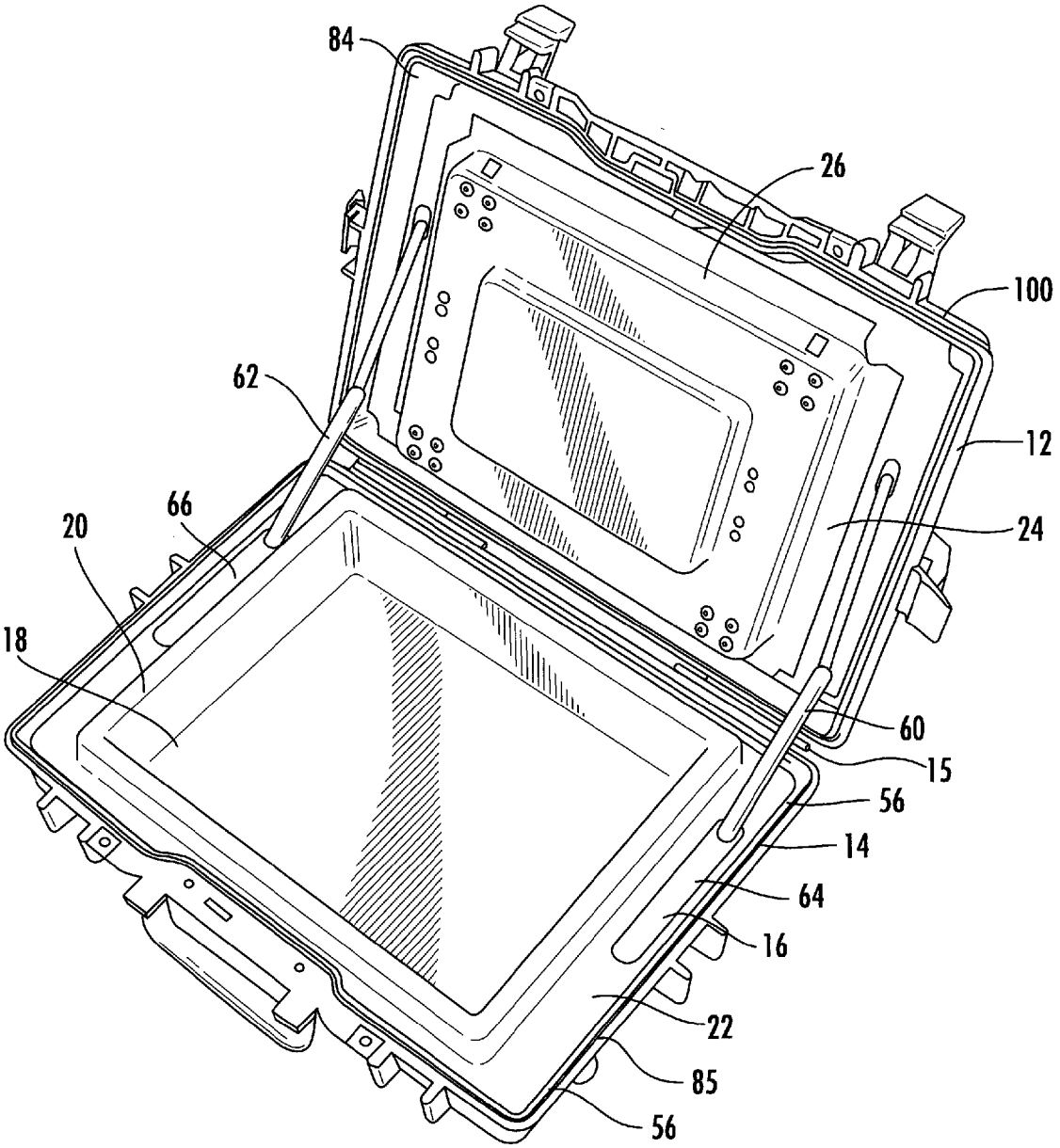

FIG. 2

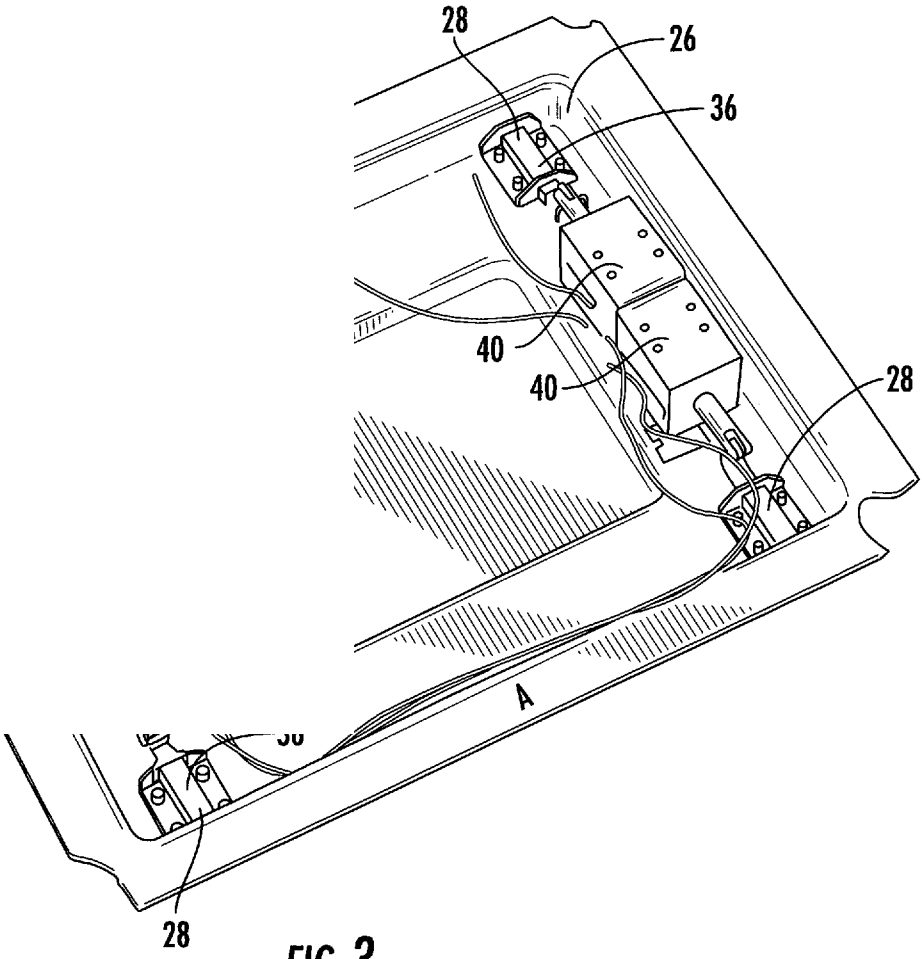

FIG. 3

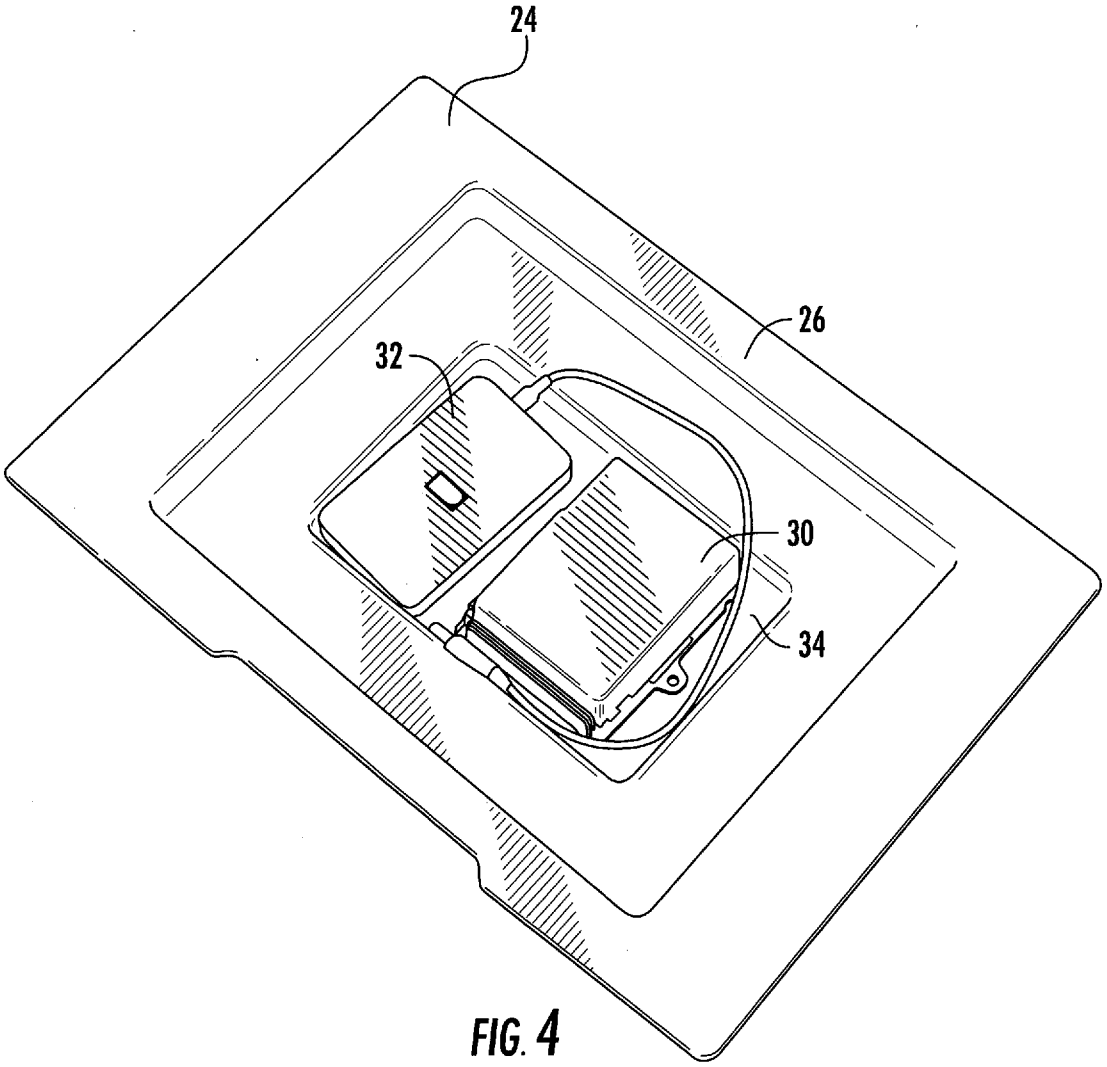

FIG. 4

FIG. 5

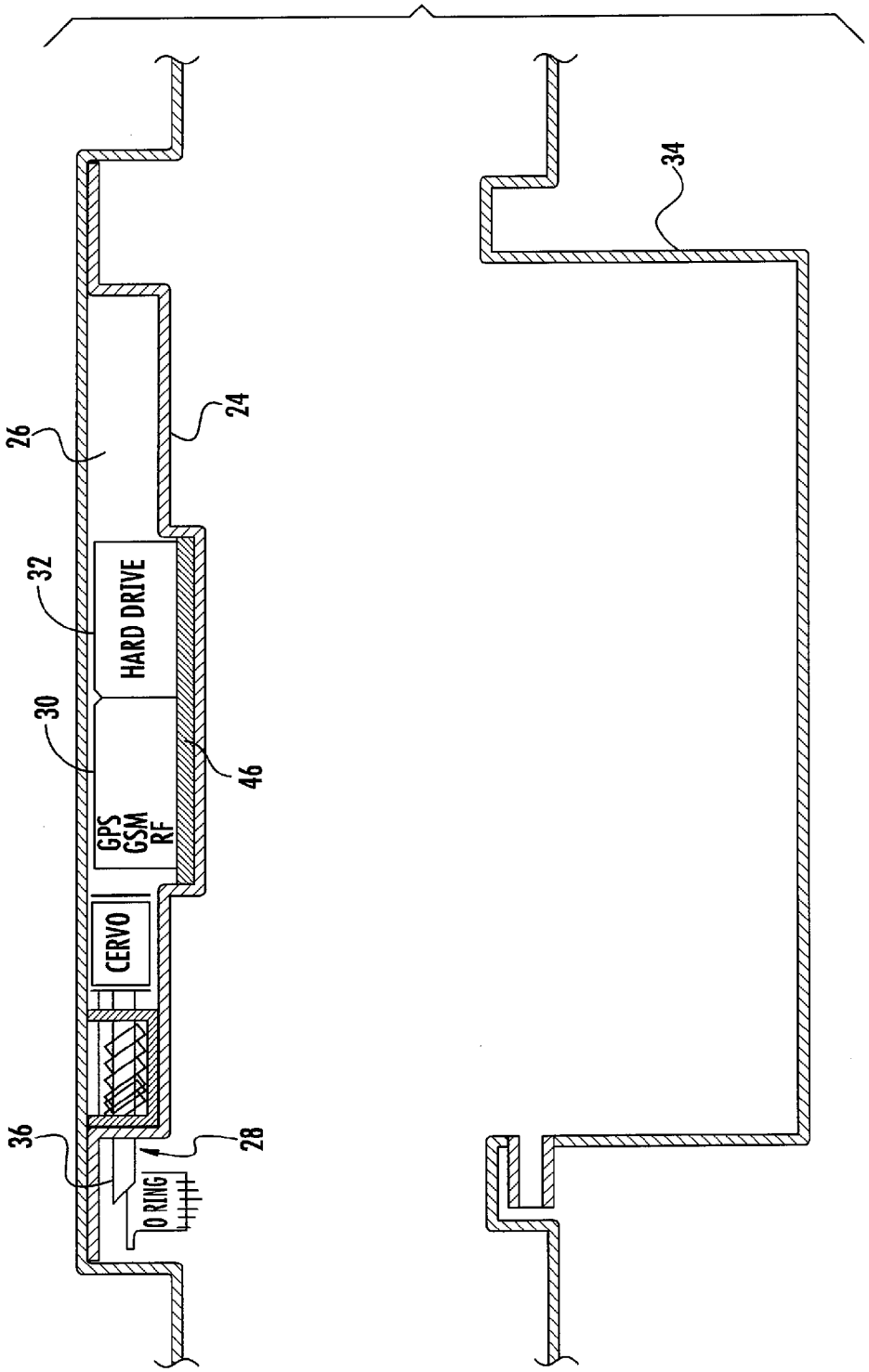

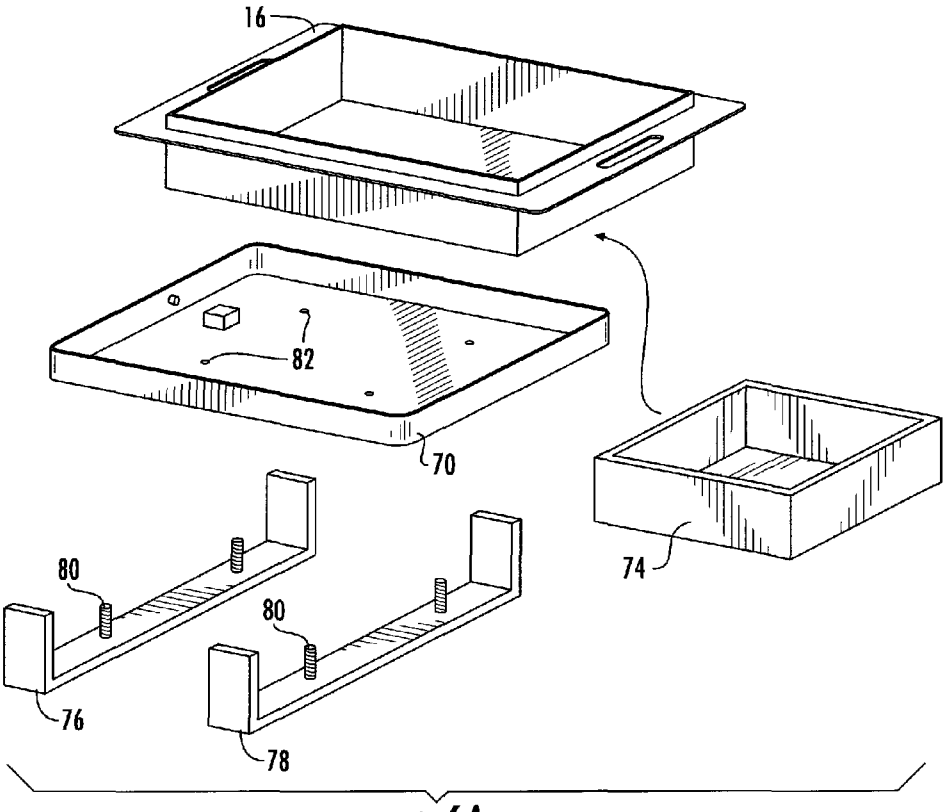

FIG. 6A

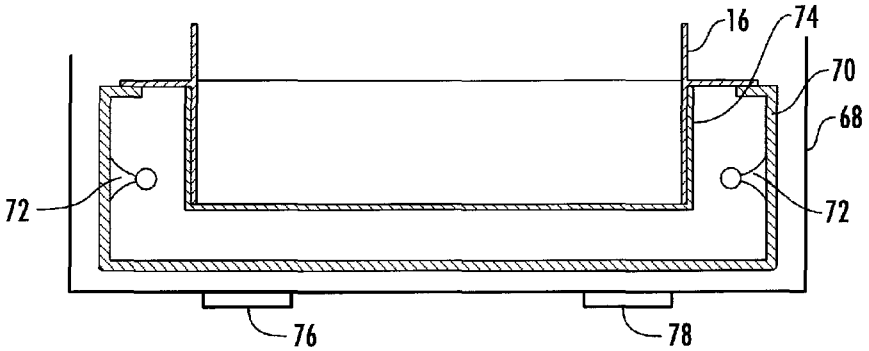

FIG. 6B

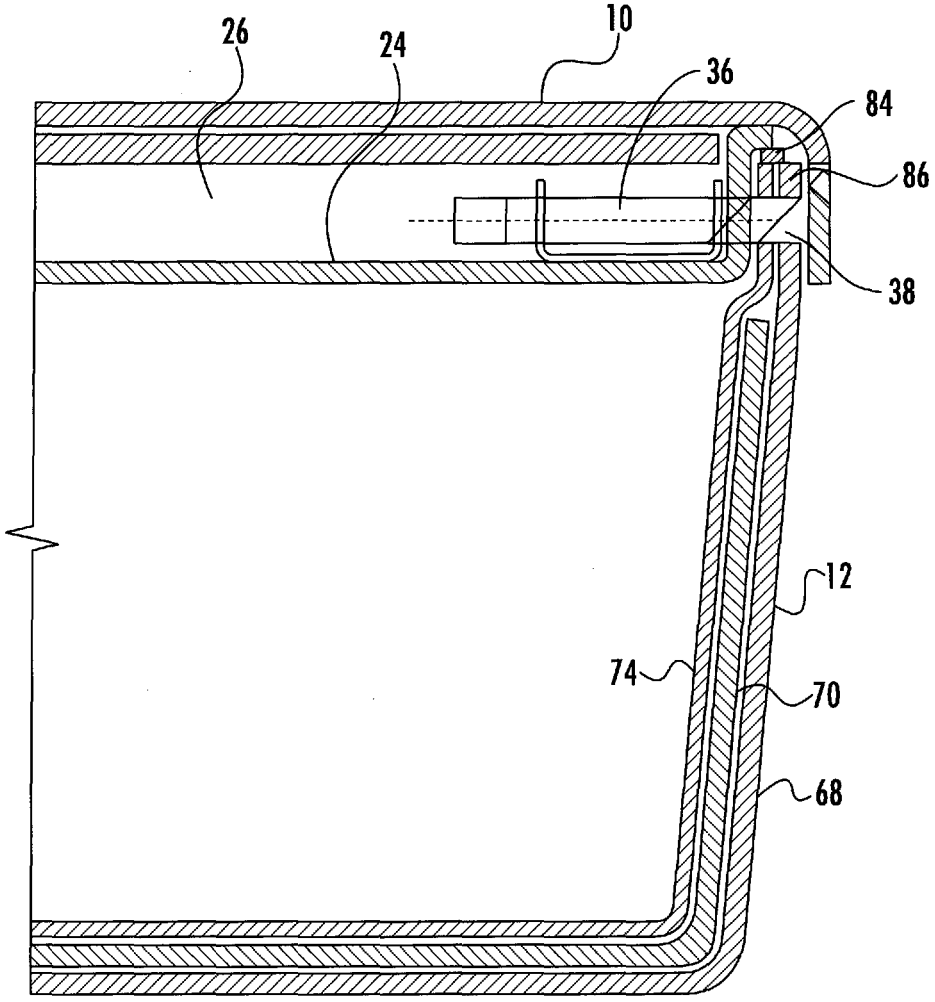

FIG. 6C

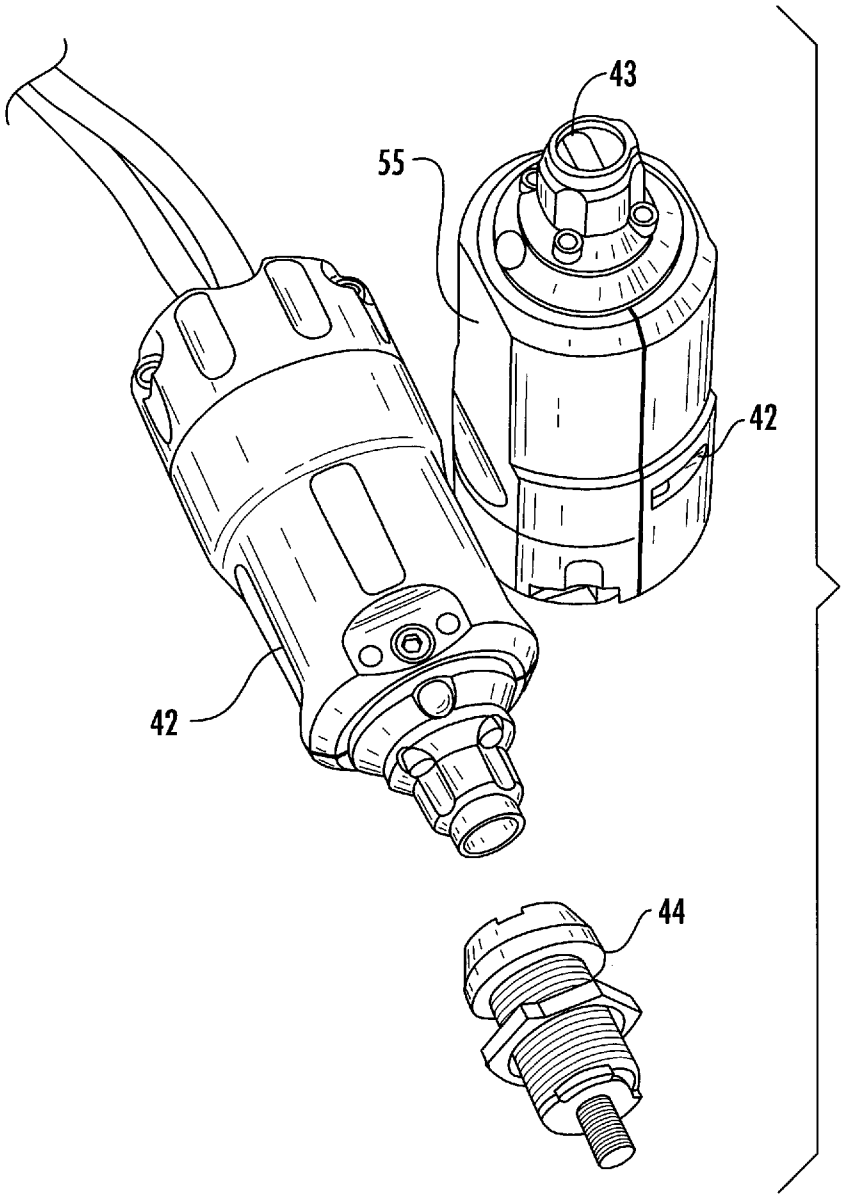

FIG. 7

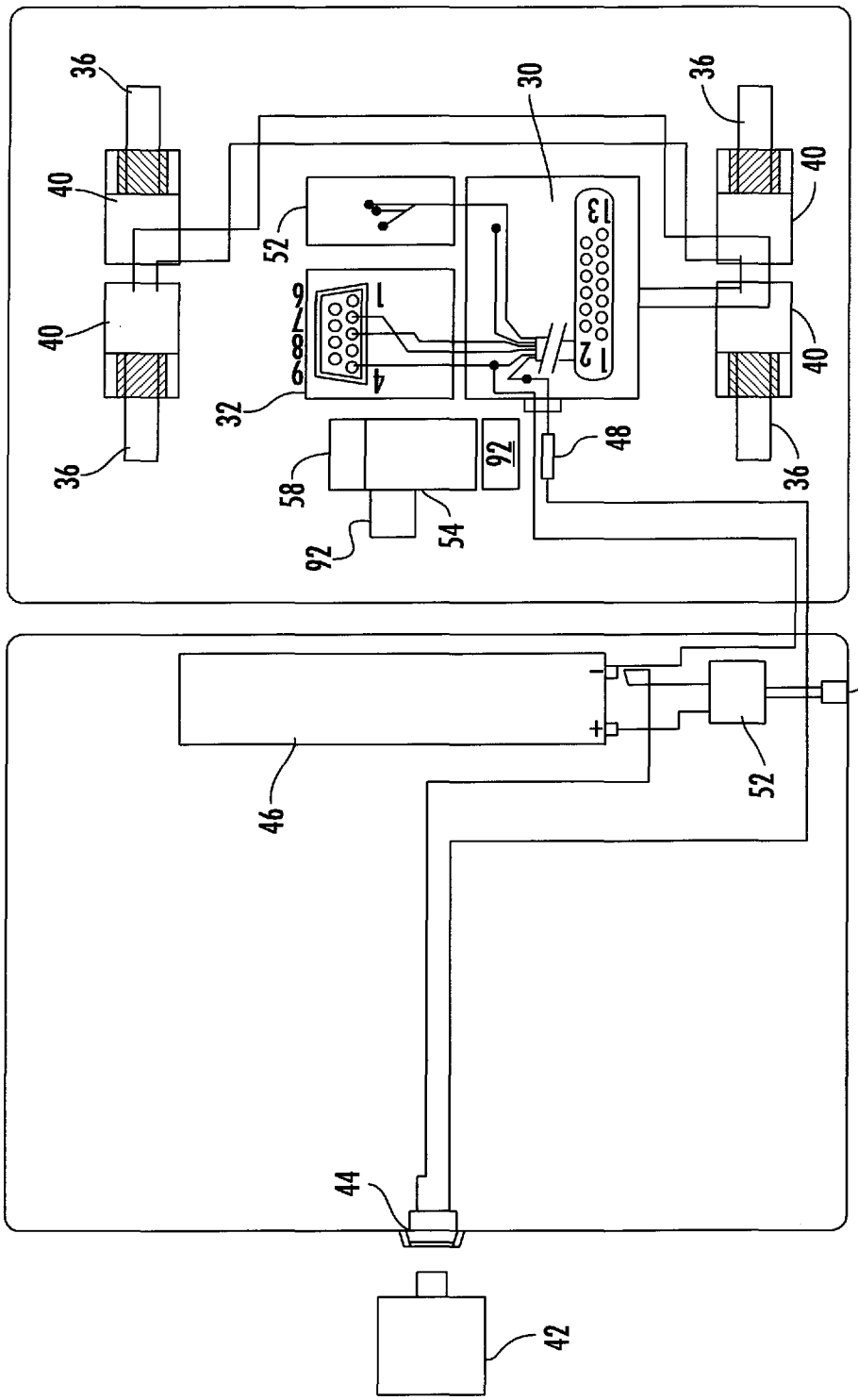

FIG. 8

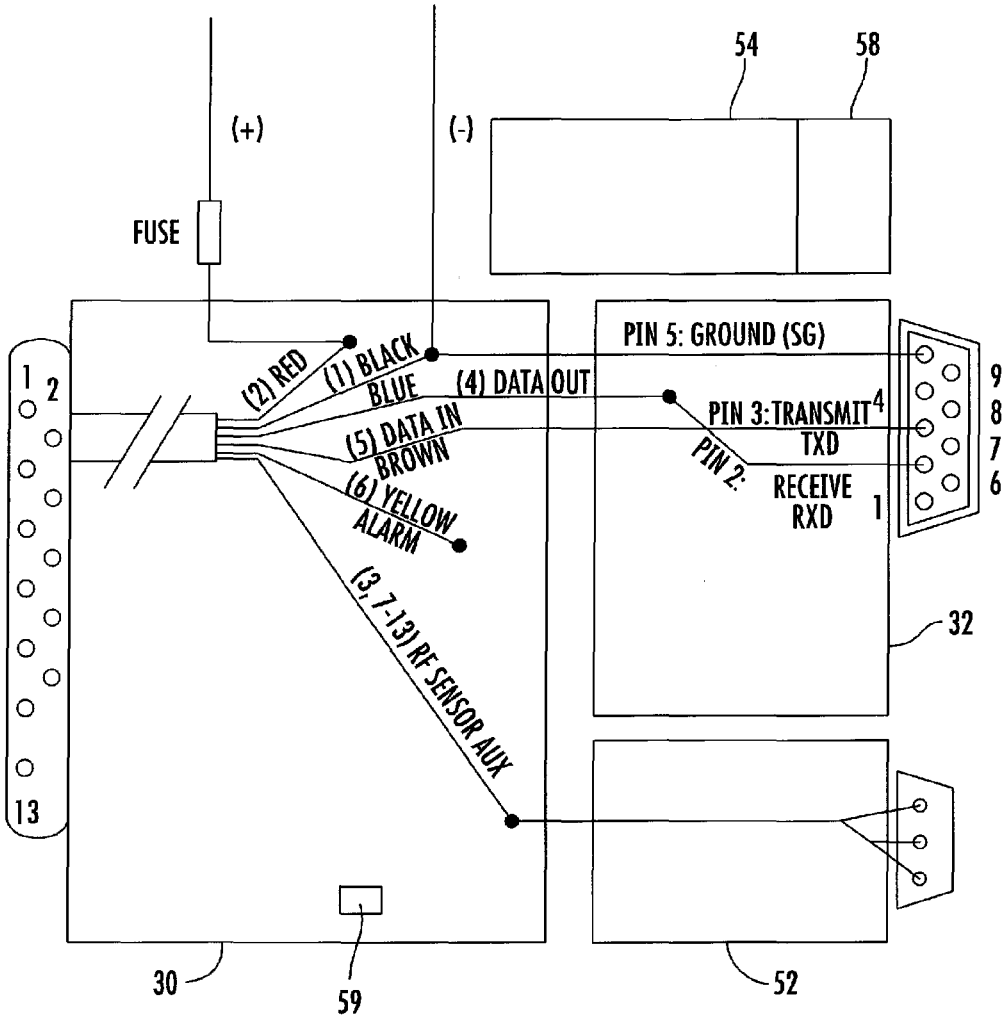
54
58
(+)
(-)
FUSE
PIN 5: GROUND (SG)
(2) RED
(1) BLACK
BLUE
(4) DATA OUT
PIN 3:TRANSMIT
TXD
(5) DATA IN
BROWN
PIN 2:
RECEIVE
RXD
(6) YELLOW
ALARM
(3,7-13) RF SENSOR AUX
1
2
13
9
8
7
6
4
1
32
30
59
52

FIG. 9

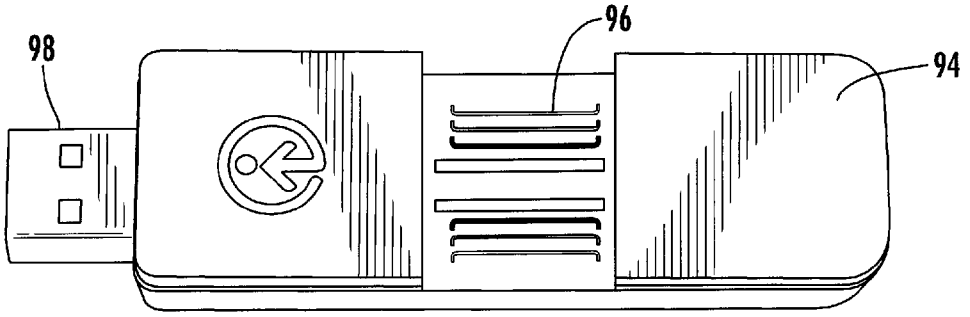

FIG. 10

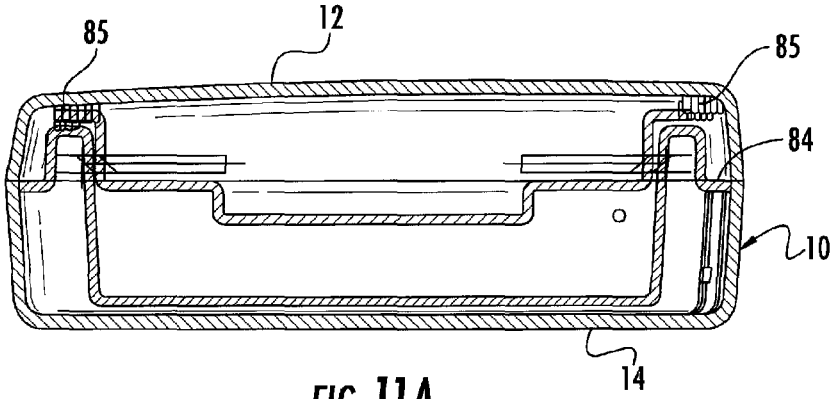

FIG. 11A

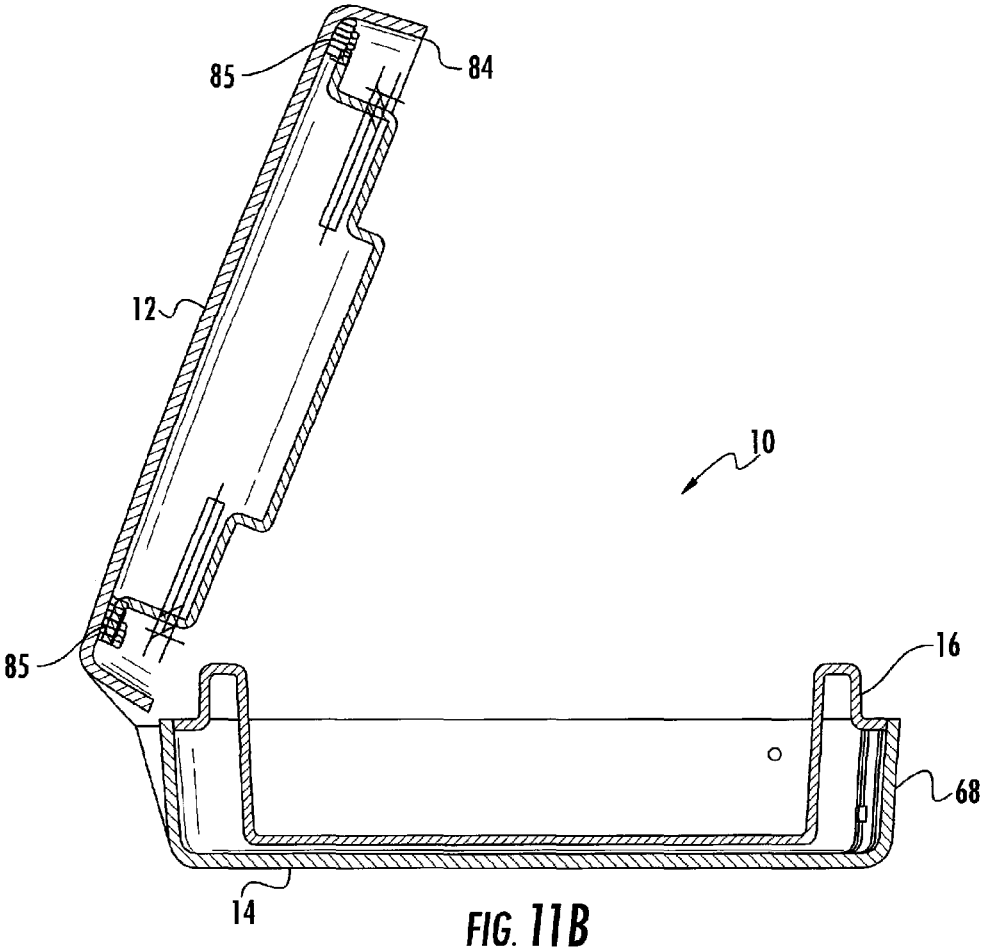

FIG. 11B

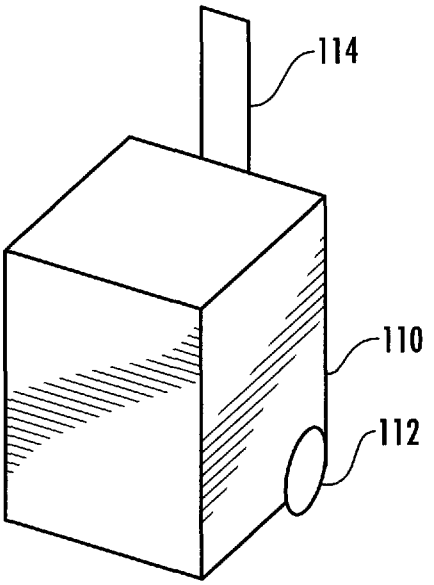

FIG. 12

FIG. 13

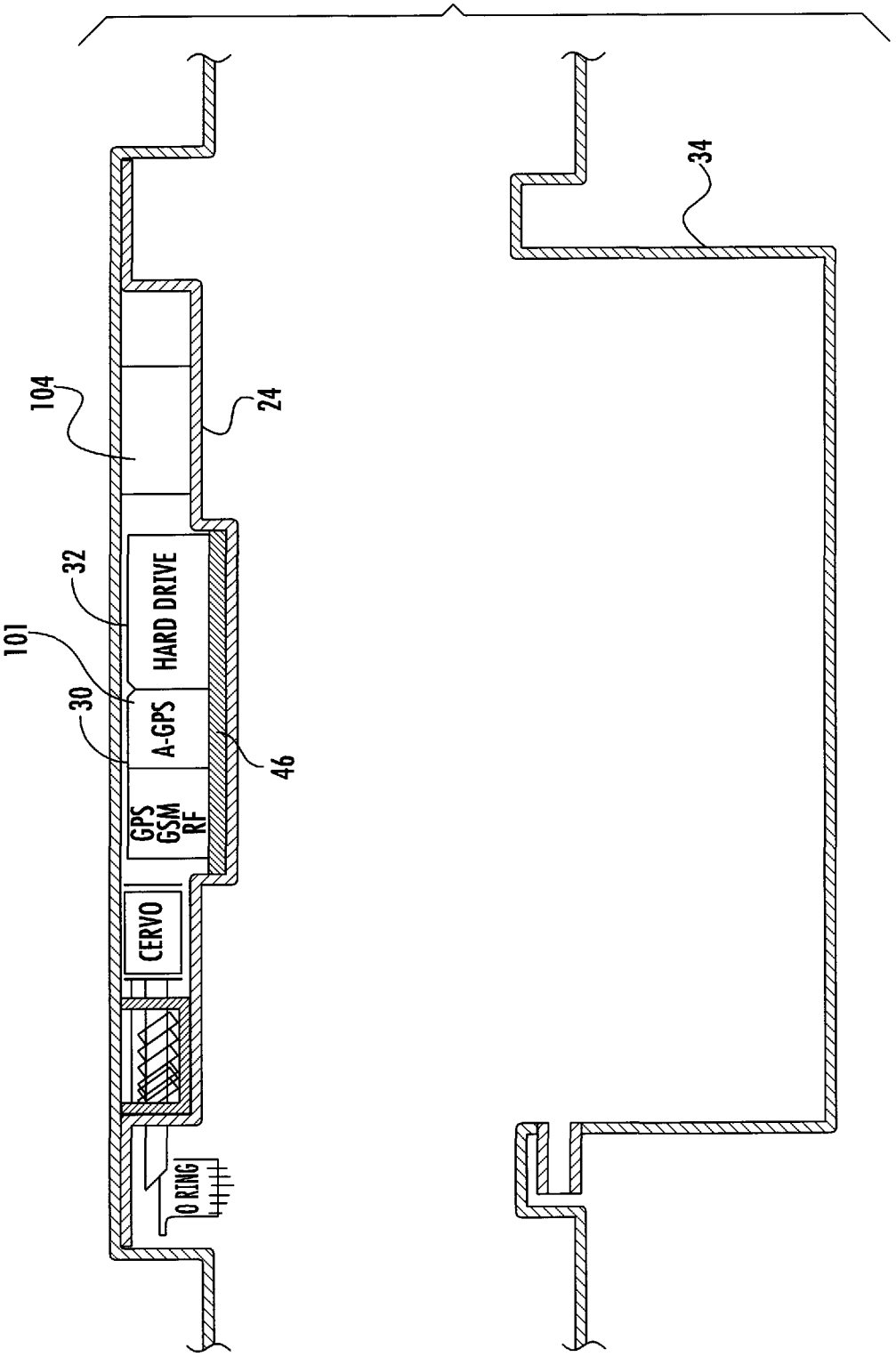

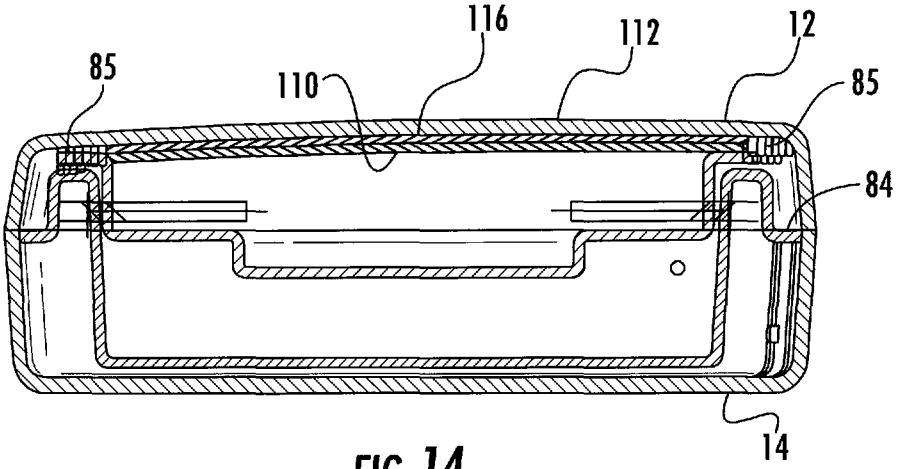

FIG. 14

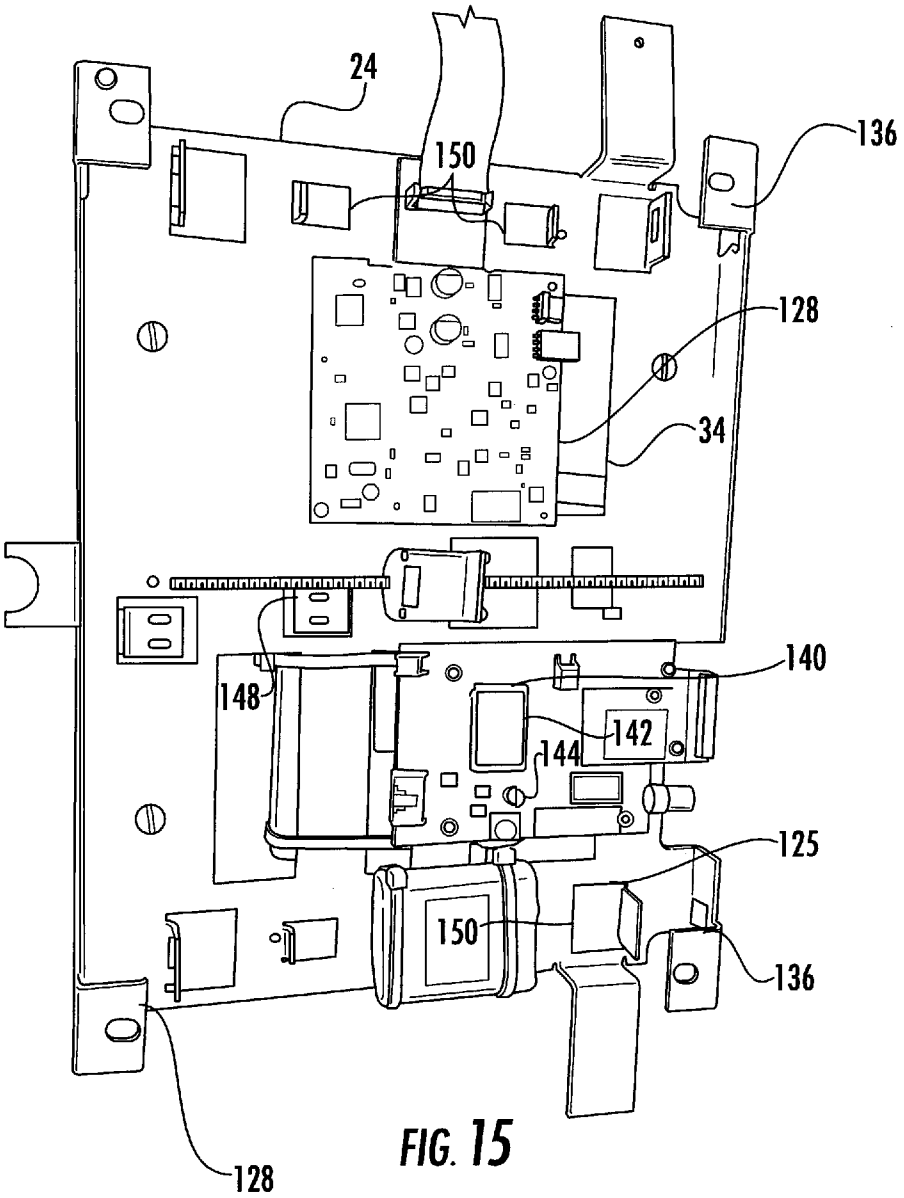

FIG. 15

SECURITY CASE

PRIORITY CLAIM

[0001] In accordance with 37 C.F.R 1.76, a claim of priority is included in an Application Data Sheet filed concurrently herewith. Accordingly, the present invention claims priority to U.S. Provisional Patent Application No. 61/800,958, entitled "Security Case", filed Mar. 15, 2013, which was a continuation-in-part of U.S. patent application Ser. No. 13/101,336, entitled, "Security Case", filed May 5, 2011. The contents of each of the above referenced applications are herein incorporated by reference in their entirety.

FIELD OF THE INVENTION

[0002] The present invention relates to the secure transportation of valuable objects; in particular, it relates to a portable container which restricts access to the contents within the container to authorized individuals and enables the container to be tracked.

BACKGROUND OF THE INVENTION

[0003] With crime always on the rise, especially today, it is imperative to provide protection for valuable materials such as jewelry, financial files, financial documents, credit cards, intelligence files, etc. Since the transportation of these objects cannot always be restricted to armed and secure vehicles, individuals must be relied on to transport these valuables. To enable an individual to securely transport these valuables, a portable security case or container must be provided.

[0004] DESCRIPTION OF THE PRIOR ART

[0005] U.S. Publication No. 2005/0225432 discloses a method of transporting an alarmed container. The alarmed container is used to transport valuables. The alarmed container includes a first electronic unit which functions to accept and permit deactivation and/or opening of the alarmed container. The container is opened with the aid of a primary key which includes a second electronic unit that communicates with the first electronic unit in respect of initiating opening of the container. The primary key accompanies an individual transporting the container, and the container is opened and/or its alarm system deactivated at its destination with the aid of a code subset from the individual carrying the primary key in co-action with a code subset obtained from a destination-located secondary key, therewith providing a total code-set required for initiating opening/deactivation of the container.

[0006] U.S. patent application Ser. No. 13/101,336 discloses a security case that can be secured in a locked condition which can be operated by an electronic key. The electronic key can be programmed to open the case or container dependent upon various different conditions; for example, location, time, identification of operator, etc. In addition to the electronic key, a biometric identification device can be employed. The exterior of the case or container is made from different materials which are impermeable and resistant to heat, drilling and ballistic impact. A GPS type of location device located within the case enables the case to be tracked from remote locations. The present invention is by the same inventor and is an improvement on the invention disclosed in this application.

SUMMARY OF THE INVENTION

[0007] The present invention involves the provision of a security case for storing and transporting an item in a secure manner. The case includes a lid coupled to a base and cooperating therewith to define a closable storage chamber. At least one lock device is located inside the case and operable to selectively maintain the lid locked in a closed condition to the base, selectively resisting access to the storage chamber. At least one electronic data input device is associated with the case. At least one location device is associated with the case and is positioned therein; the location device is operable to selectively determine a location of the case. A memory device is associated with the case and is positioned therein. A controller is operably coupled to the memory device, location device, the data input first device and the lock device, and is operable to selectively permit said lock device to be moved to an unlocked condition when at least two of the location device and first device provide acceptable information to the processor. The controller is operable to compare the received first information to second information stored in the memory to determine if the received first information is acceptable and, if acceptable, authorizing the lock device to be unlocked and send a signal to the lock device to move to an unlocked condition.

[0008] The present invention is a self contained, portable security case or container. The case is secured in its locked condition by locks which are preferably operated by an electronic key to initiate at least an unlock command, either as the sole input or with other conditions such as location, time, identification of operator with biometric information, etc. The exterior of the case or container can be made from different materials which are impermeable and resistant to heat, drilling and ballistic impact. In addition, a GPS locator system can be included within the case to enable the case to be tracked from remote locations. A system can be provided to confirm the location of a courier relative to the case.

[0009] Accordingly, it is an objective of the present invention to provide a security case comprising a plurality of layers which are resistant to unauthorized entry into the case.

[0010] It is a further objective of the present invention to provide a security case including a security system contained therein which permits entry into the security case only by authorized individuals.

[0011] It is yet another objective of the present invention to provide a security case which includes a location device which permits an individual to track the current and past locations of the security case.

[0012] It is a still further objective of the present invention to provide a security case including a security system which utilizes electronic keys to gain entry into the security case.

[0013] It is still another objective of the present invention to provide a security case including a location device which utilizes satellites and ground based GPS systems to record and transmit the location of the security case to an individual at a location remote from the security case.

[0014] It is another object of the present invention to provide a signal indicative of the location of a courier relative to the case.

[0015] Other objects and advantages of this invention will become apparent from the following description taken in conjunction with any accompanying drawings wherein are set forth, by way of illustration and example, certain embodiments of this invention. Any drawings contained herein constitute a part of this specification and include exemplary embodiments of the present invention and illustrate various objects and features thereof.

BRIEF DESCRIPTION OF THE FIGURES

[0016] FIG. **1** is a top perspective view of the present invention;

[0017] FIG. **2** is a perspective view of the interior of the present invention;

[0018] FIG. **3** is a view of the locking mechanism of the present invention;

[0019] FIG. **4** is a view of the location device and hard drive of the present invention;

[0020] FIG. **5** is a cross sectional view of the present invention;

[0021] FIG. **6**A is an exploded view of a lower portion of the case of the present invention;

[0022] FIG. **6**B is a cross sectional view of a lower portion of the case of the present invention;

[0023] FIG. **6**C is a cross sectional view of a lower portion of the case of the present invention;

[0024] FIG. **7** is a view of the electronic key of the present invention;

[0025] FIG. **8** is a schematic illustration of the electronic locking system of the present invention;

[0026] FIG. **9** is a detailed view of a portion of FIG. **8**;

[0027] FIG. **10** is a view of a biometric key of the present invention;

[0028] FIG. **11**A is a cross sectional view of another embodiment of the present invention in a closed position;

[0029] FIG. **11**B is a cross sectional view of the embodiment in FIG. **11**A in an open position;

[0030] FIG. **12** is a view of another embodiment of the present invention;

[0031] FIG. **13** is a cross sectional view of the present invention similar to FIG. **5**;

[0032] FIG. **14** is a cross sectional view of another embodiment of the present invention in a closed position similar to FIG. **11**A; and

[0033] FIG. **15** is a plan view of a modified form of the invention showing means to unlock the case.

DETAILED DESCRIPTION OF THE INVENTION

[0034] While the present invention is susceptible of embodiment in various forms, there is shown in the drawings and will hereinafter be described presently preferred, albeit not limiting, embodiments with the understanding that the present disclosure is to be considered an exemplification of the present invention and is not intended to limit the invention to the specific embodiments illustrated or described.

[0035] FIGS. **1-11**, which are now referenced, illustrate the present invention and the manner in which it is assembled. A preferred embodiment of the present invention comprises a portable case or container **10** which is constructed and arranged to securely transport valuable articles. The case **10** is constructed of materials which are resistant to penetration by means such as drilling, impact, ballistic, thermal, etc. The specific materials of construction will be disclosed hereinafter. The case is also designed to resist direct penetration into the interior by providing a tortuous path from the joint of the lid and case into the interior of the case.

[0036] FIGS. **1-7** illustrate a preferred embodiment of the present invention which includes a case **10** comprising a cover or lid **12** hingedly secured to a lower portion or base **14** as with hinge **15**. The lower portion **14** includes an insert **16**. The insert **16** includes a cavity or lower chamber **18**, an upstanding wall or perimeter portion **20** and a spacer or buffer area **22**. The valuable articles to be securely transported are housed within the cavity or chamber **18**. As can be seen in FIG. **2**, the cavity or chamber **18** does not extend to the outermost edges of the lower portion **14**. The upstanding wall or perimeter portion **20** extends completely around cavity **18**. The spacer or buffer **22** extends outwardly from the cavity upstanding wall **20** to the edge of the lower portion of case **14**. The upstanding wall **20** and cavity spacer **22** provide a tortuous path from the edge of the case **10** to the cavity **18**, thereby preventing direct access to the cavity **18**. This prohibits someone from inserting a thin metal object or similar item to gain access to the contents of chamber **18**.

[0037] The cover or lid **12** of the case **10** includes an insert or spacer **24** forming an upper chamber **26** (FIG. **2**). The upper chamber **26** contains the locks **28** which secure the case **10** closed (FIG. **3**). The upper chamber **26** also contains a GPS location device **30** and an electronic memory device **32** such as a hard drive (FIG. **4**). The location device **30** and the memory device **32** are contained within a depression or well **34** of the upper chamber **26**. The location device **30** and memory **32** are not illustrated in the upper chamber **26** of FIG. **3**. The locks **28** are not illustrated in the upper chamber **26** of FIG. **4**. The manner in which the locks **28** secure the lid **12** to the lower portion **14** is illustrated in FIG. **6**C. A pin or locking member **36** is an element of each of the four locks **28**. The pin **36** moves in a longitudinal direction between an extended or locked position, as illustrated in FIGS. **2** and **6**C, and a retracted or open position. In the retracted or open position, the pin **36** does not extend into an aperture in the side of the lower portion **14** of the case. In the locked position, the pin **36** extends into the aperture **38** in the side of the lower portion (FIG. **6**C).

[0038] Each of the pins **36** is operated by an electrically powered device such as a solenoid **40**. The solenoids **40** are preferably operated according to the schematic of FIG. **8**. In place of solenoids **40**, stepper motors can also be employed. The stepper motors would preferably drive a worm which is drivingly coupled to a worm gear (not shown), which in turn operates the pins **36**. An advantage of such a stepper motor drive system is that the locks **28** cannot be driven backward, thereby preventing access to the interior of said case. An electronic key **42** is utilized to open lock **44** (FIGS. **7** and **8**). When lock **44** is open, an electrical circuit is completed. The electrical circuit includes lock **44**, a battery **46**, a fuse **48**, and solenoids **40**. While the battery **46** is preferably located within the depression or well **34**, it could be located anywhere within the case **10**. When the battery **46** is located within the well **34**, it is preferably a flat and relatively thin type of battery, as illustrated in FIG. **5**. An electrical connector **50** (FIG. **8**) is provided through the outer shell of the case. The connector **50** is preferably in the lid **12** of the case **10**, but it can also be in the base **14**. The connector **50** is electrically connected to an electronic controller **54** which includes a digital processor which regulates the amount and duration of current sent to the battery **46** to recharge the battery. Depending on the type of battery **46**, nickel cadmium, nickel metal hydride, lithium ion, lithium ion polymer, etc., the amount of current and rate at which the current is sent to the battery for recharging will be variable in order to protect the battery from overcharging and/or overheating. The electrical power or energy supplied to the connector **50** is preferably from a transformer which converts 120 AC (Alternating Current)

voltage to DC (Direct Current) voltage. The amount of DC voltage delivered to the battery is dependent upon the type of battery being recharged.

[0039] The electronic key **42** can be programmed to only open specific locks **44**. The electronic key **42** includes a plurality of contacts **43** which electrically connect with respective contacts (not shown) on the lock **44**. When the lock **44** receives the proper signals or indicators, it permits the electronic key to physically turn and open the lock **44**. Preferably, an electronic key locks the case **10** at a point of departure and a separate electronic key at the final destination opens the case **10**. The electronic keys can also be programmed to only open the case at a certain time or within a certain time frame or window as preprogrammed. Another feature of the electronic key is that it can be disabled or enabled from a signal transmitted by a satellite, a cell phone or a radio frequency transmission.

[0040] Another embodiment of the present invention is illustrated in FIGS. **8** and **9**. In this embodiment a location device **30**, a memory **32** and a proximity sensor **52** are located within the well **34**. The location device can utilize one or more of GPS (Global Positioning System), GSM (Group Special Mobile), and RF (Radio Frequency) signals to determine the location of the case **10**. The GPS utilizes satellites and triangulation to determine the location of the case **10**. The GSM and RF systems utilize cellular telephones and triangulation to determine the location of the case **10**. A travel plan by time of day and location can be stored in the memory **32**, and the controller **54** can be programmed to determine if the case **10** is or is not following the travel plan information stored in the memory **32**. If the travel plan is not being followed, an alarm can be initiated or a signal sent to a remote location to provide notice of the variance and current location information. The location device **30** can be programmed or provided instructions from controller **54** to continuously or intermittently monitor the various locations of the case **10** as it travels from one location to another, and the controller **54** can effect sending of the location information to a remote monitoring location, wherein the location device is operable to provide route information to the memory device for storage, said route information including location and time of day at location.

[0041] This information can also be stored in the memory **32**. The location device **30** can also communicate with a user's (such as a monitor at a remote location) cellular phone or similar device to transmit the various locations of the case as it travels from one destination to another. This information can be transmitted via RF or GSM. The location device **30** can also transmit a satellite picture of the location of the case or container to a user at a remote location. In addition, the ZigBee® wireless technology can be employed to transmit the above noted information. This technology is an open global standard that is often employed whenever there is difficulty with RF transmissions, no cell phone towers, etc. When ZigBee® is used for transmission of data, a chip is normally located adjacent the location device **30**. The location device **30** is preferably provided with a back-up battery in the event that the main battery **46** goes dead. The back-up battery can be used to transmit the location of the case **10**.

[0042] The proximity sensor **52** will detect the presence of a smart key or similar device, which can be incorporated into key **42**, carried by an individual (for example, a courier) who has been provided with the device. The proximity sensor **52** is programmed to respond when a smart key or similar device is within a predetermined distance of the proximity sensor **52**. The electronic smart key or similar device is normally given to the courier of the case **10**. The proximity sensor **52** then sends a signal to the controller **54** that an individual with the proper credentials, the courier, is within a predetermined distance of the case **10**. Should the courier go outside of a predetermined distance or range, this is an indication that the courier has left or abandoned the case. Another signal is then sent to the controller **54** to indicate this condition or if there is no signal present, the controller **54** is programmed to perform as indicated below. The controller **54** can also be programmed to immediately sound an alarm or transmit a signal to a user at a remote location that the courier has left the case and the location of the case. The user can receive these reports in the form of an e-mail notification. However, other types of cellular phone communications can be employed to notify such user of the location of the case. The e-mail communications can also include a map of the current and previous locations of the case. This enables a monitor to print out a hard copy of the current and past locations of the case. This also enables a monitor to track the path of the case as it moves from one location to another. Should the case move or deviate from a predetermined path, the monitor may alert the authorities or similar individuals that the case has been stolen or diverted from its predetermined path.

[0043] In a preferred embodiment, the proximity sensor **52** or other device adapted to be carried by the courier can be provided with means to wirelessly signal the case **10** that the courier is with the case. This can be done with a simple switch or a secure switch device such as a biometric sensor **55** (FIG. **7**), e.g., a fingerprint reader and transmitter. The sensor **55** can be incorporated into the key **42**. If such a signal is not received in accordance with information stored in the memory **32**, the processor **54**, in accordance with its programmed instructions, can sound an alarm and/or send a signal to a remote location to inform someone that the instructions have been violated and that there is a possible breach of security. This arrangement can be programmed to require a signal from the courier on a time schedule, location schedule, courier in perceived danger, etc.

[0044] The controller **54** can be positioned adjacent to memory **32**. The controller **54** is programmed to control and monitor various operations of the case **10**. For example, the controller **54** can be programmed to transmit the location of the case **10** at predetermined time intervals. The controller **54** can also be programmed to transmit the saved locations of the case **10** to a monitor at predetermined times. The controller **54** can effect notification to a monitor immediately or at a predetermined delay if and when the courier has left or abandoned the case. The controller **54** can be programmed to determine, from consecutive location transmissions, if the case has been removed from or been diverted from a predetermined path. This would indicate that the contents of the case may have been tampered with.

[0045] A plurality of sensors **56** (FIG. **2**) can be positioned around the perimeter of the case between the lower portion of the case and the lid of the case. These sensors **56** can determine if the lid **12** of the case has been moved relative to the base **14**, indicating that the case **10** has been opened. A light sensor **59** (FIG. **9**) on the location device **30** can also be utilized to indicate if the case **10** has been opened. The controller **54** can be programmed to transmit a signal to a remote location if the case **10** has been opened by an unauthorized individual, which is an indication of a potential robbery or theft. The controller **54** can be programmed to recognize

authorized opening of the case within a certain time range. It can also be programmed to recognize authorized opening of the case at a specific predetermined location. Unauthorized opening or entry into the case **10** is recognized by the controller **54**, and this information is transmitted to an alarm **58**. The alarm **58** can emit an audible signal within the case **10**, a visual signal outside of the case, and/or it can transmit the information of unauthorized entry to a user or system monitor at a remote location. The remote location can utilize a security monitoring service. In either situation, a person is ultimately notified that there is a problem with the transportation or unauthorized entry into the case.

[0046] Another feature of the tracking system is that if the case **10** has not moved within a predetermined time, **3** hours for example, the system goes into a "sleep" mode to conserve the battery. In the sleep mode the location tracking and reporting from the case can be suspended. The sleep mode of the monitoring system can be ended by movement of the case **10** or by transmitting a signal to the monitoring system to stop the sleep mode. This can also be accomplished by pressing a button on the case.

[0047] The lid **12** is also secured to the base **14** of the case **10** by a pair of gas shock hinges **60** and **62** (FIG. **2**). These hinges pass through the top of insert **16** through slots **64**, **66**. Theses hinges **60**, **62** are pivotally secured to the lower portion of the case, and also to the lid of the case. FIG. **6**B is a cross section of the lower portion of the case. An outer shell **68** is preferably formed from Dyneema. This material cannot be cut by conventional means. Next, a tub or trough shaped layer or element **70** is located within the outer shell **68**. The element **70** is preferably made from titanium; however, similar materials can be used which are resistant to penetration by drilling. The element **70** is provided with mounts **72** for the lower portions of hinges **60** and **62**. The mounts **72** permit the gas shock hinges to be pivotally secured to the base **14**. The next element or layer **74** within element **70** is also tub or trough shaped. Element **74** is made from an aramid material. This material is resistant to ballistic penetration. Finally, the insert **16** is located within element **74**. Insert **16** is preferably made from a polycarbonate material.

[0048] A plurality of metal straps **76**, **78** are secured to the outer portion of outer shell **68**. The straps **76**, **78** are provided with a number of threaded studs **80**. The studs **80** pass through apertures **82** in element **70** and are secured thereto by nuts or similar means. Element **74** is preferably adhesively adhered to element **70** and insert **16**. Other means to secure these elements together can also be employed. The lid **12** of the case **10** is constructed in a manner similar to the lower portion of the case. This type of construction prevents unauthorized entry into the case by most means. The outer perimeter of the lid includes an O-ring or seal **84**. The O-ring or seal abuts the upright ridge **86** on the lower portion of the case to form a fluid tight seal. This seal prevents penetration into the case by any type of fluids. An additional seal **85** can be provided between the lid and the upper rim of insert **16** (FIGS. **11**A and **11**B). The seal **85** extends completely around the lid **12** and insert **16**.

[0049] Referring to FIG. **1**, a biometric detection device, such as a finger print detector **88**, is preferably secured to the lid of the case and accessible by a person such as a courier, case sender or recipient. The biometric detection device **88** includes an aperture **90** for placement of finger therein. A sensor below the aperture **90** detects the finger print and sends this information to a controller or chip **92** (FIG. **8**) located adjacent controller **54**. The controller **92** compares the current finger print information against the authorized finger print information stored in memory, such as memory **32**, and permits the case **10** to be opened when a proper match is achieved. Additionally, a particular sensor can be employed which will only authorize entry into the case, for example, when a finger on the left hand of an individual is used. This system can be programmed to only open one side of the case when, for example, the right hand of an individual is placed into the sensor **88**. Additionally, a portable biometric sensor **94** (FIG. **10**) can be utilized to gain entry into the case. The portable biometric sensor **94** includes an aperture **96** into which an individual places their finger. The portable biometric sensor **94** includes a USB connector **98**. This USB connector can be inserted into a USB receptacle or slot **100** located at the front of the lid **12**, FIG. **2**.

[0050] Additionally, a Faraday cage can be provided in the interior of the case **10**. The Faraday cage will prevent unauthorized RF transmissions into the case. The titanium element **70** can also function as a Faraday cage.

[0051] FIG. **12** is an alternative embodiment of the present invention. In this embodiment, the case **110** is substantially larger than case **10**. Additionally, the case is provided with wheels **112** for ease of transport of the relatively large case. Further, a retractable handle **114** is secured to a rear portion of case **110**. The interior construction of case **110** is similar to the interior construction of case **10**.

[0052] Referring to FIG. **13**, the present invention can include an A-GPS system **101** that can be used in combination with the satellite based GPS system at **30** described above. The A-GPS system **101** would be used in place of the GSM (Group Special Mobile) and RF (Radio Frequency) systems described above. The A-GPS system **101** provides higher accuracy than the latter two systems and a much stronger signal than a satellite based GPS system, and can be detected better in buildings, in cities and in areas that have overhead signal barriers like a tree canopy along bluffs and the like. A-GPS uses land based network resources to locate positions in poor signal conditions. The A-GPS system **101** can also be used alone in the event a signal from the GPS system is not being received.

[0053] In a most preferred embodiment, the controller **54** combines biometric input information from a detector **88** with location information from each of GPS, GSM and RF signals that track the case **10** to determine if the case **10** can be opened. The controller **54** can be programmed, depending on the security need, to use any one of these systems for location information. The controller **54** can also be programmed to move from one of the location systems to another in the event there is a weak signal from the initially selected system In this embodiment, all preprogrammed criteria need to be met before the case **10** will open. Once the predetermined information is available to establish that the opening criteria has been met, the controller **54** will provide a signal to the means to unlock the case, e.g., the device **140** to effect unlatching. The controller **54** and the location systems **30**, **101** can be used to send signals to a remote system to show a map of the path of movement of the case **10**.

[0054] The case **10** can also be provided with one or more sensors **104** that are operable to indicate possible physical tampering. For example, an accelerometer, vibration sensor or microphone could be provided that would be coupled to the controller **54** that could indicate a hammer blow, vibrations from a cutting tool or the like. One or more thermal sensors

can be provided and coupled to the controller **54** to indicate an elevated temperature which could indicate an attempt to use a torch to cut open the case **10**. The controller **54**, upon receiving a signal from such a sensor, would then alert a case tracker or monitor at a remote location and/or set off a built in alarm as described above. The type of sensor activated can be transmitted to indicate the possible type of tampering along with the location of the case **10**.

[0055] As shown in FIG. **1** and as described above, a biometric detection device is provided. A plurality of such detectors can be used, such as a plurality of finger print detectors **88** in order to further secure the case **10**, instead of a single biometric detection. In one embodiment, two fingers can be read by the detectors simultaneously to approve unlocking. However, it is to be understood that one detector **88** can be used for reading successive body part exposures such as a plurality of fingers in sequence. A sensor below the aperture **90** detects the biometric information and sends this information to the controller or chip **92** located adjacent controller **54**. The controller **92** compares the current finger print or prints against the authorized finger prints and permits the case **10** to be opened when a proper match is achieved, assuming other information is not requested. Further, the controller **54** can be configured to allow the case to only be opened if it is located at a pre-approved location, even if the correct biometric information has been identified. Additionally, the controller **54** can be configured to recognize an unauthorized finger to send a signal that an unauthorized attempt to open the case has been made. The unauthorized finger or other readable biometric information can be provided for scanning by an authorized courier as an alert of a problem. The controller **54** can send a signal to provide the location of the case at the time of the alert. Further, a particular body part can be associated with a particular kind of alert, for example, the small finger could be scanned to indicate a flight delay while an index finger could indicate kidnapping. The alert can also trigger an alarm in the case **10** such as an audio alarm. The alert could also trigger activation of an alert like an explosive dye pack.

[0056] Controller **54** can also be configured to not permit opening of the case until the case is at a predetermined location as determined by, for example, the GPS location device **30** and/or A-GPS **101** device. See FIG. **13**. Controller **54** may also be configured to provide an alert to be given by the case, such as an audio alarm or signal, to a remote location if the case deviates from a predetermined travel path that is programmed into the processor **54** or upon alert from a case tracker monitoring progress of the case **10**. Separation of the case **10** from the courier, as indicated by proximity sensor **52**, can also trigger an alert to the remote tracking system and the case **10** and initiate an alarm or other activity such as an audio alarm or explosive die pack. The proximity sensor **52** may be of a Bluetooth enabled system type.

[0057] The case **10** as described above can also be made additionally tamper resistant in addition to the means described above. For example, the inserts **16**, **24** can be made of an impact resistant material such as polycarbonate, providing multiple layers of material in the lid **12** and base **14**. The lid **12** and base **14** can be constructed to resist penetration with cutting tools and/or impact depending on the level of security needed and the materials to be secured in the case **10**. The lid **12** and base **14** may be of a laminated multiple layer construction, say of polycarbonate and metal, one layer **110** to resist impact and one layer **112** to resist cutting, see FIG. **14**. A layer **116** of material may be interposed between two layers that will gum up a mechanical cutting tool; some polymeric materials and metals will gum a mechanical cutting tool and slow cutting into the case. The laminated construction is shown as only a portion of the lid **12**, but it is to be understood that it can be located as any part of the lid **12** and base **14**. The case **10** can be constructed of a material that, if entry is attempted by cutting with a flame, the case will self destruct, destroying the contents. One suitable metal alloy to accomplish this is magnesium alloy. Phosphorous or some of its compounds could also be used in a laminated structure.

[0058] FIG. **15** shows an additional embodiment of the invention. It utilizes a different locking and unlocking mechanism than that described above through the use of a single drive device operably connected to the locks **128**. The locks **128** are similar in construction and operation as the locks **28** described above. A pin or locking member **136** is an element of each of the four locks **128**. The pin **136** moves in a longitudinal direction between an extended or locked position and a retracted or open position. In the retracted or open position, a pin **136** does not extend into an aperture in the side of the lower portion **14** of the case. In the locked position, the pin **136** extends into the aperture **38** in the side of the lower portion (FIG. **6**C). Each of the pins **136** is operated by a suitable electrically powered drive device **140** such as a stepper motor. The device **140** is secured to the insert **24** and is located in the well **34**. There is provided a pair of worms **142** for selective rotation by the device **140**. The worms **142** are each received in a respective worm gear **144** which moves in response to rotation of the respective worm **142**. As shown, the worm gears **144** are each operable connected to a respective link **147** via a respective bracket **148**. The links **147** are each connected to a respective pair of locks **128** as at **150**. Thus, when the device **140** is made operable upon command from the processor **54**, the links will move in unison effecting either locking or unlocking movement of the pins **136**. Only one drive device is needed in this construction.

[0059] All patents and publications mentioned in this specification are indicative of the level of those skilled in the art to which the invention pertains. All patents and publications are herein incorporated by reference to the same extent as if each individual publication was specifically and individually indicated to be incorporated by reference.

[0060] It is to be understood that while a certain form of the invention is illustrated, it is not to be limited to the specific form or arrangement herein described and shown. It will be apparent to those skilled in the art that various changes may be made without departing from the scope of the invention and the invention is not to be considered limited to what is shown and described in the specification and any drawings/figures included herein.

[0061] One skilled in the art will readily appreciate that the present invention is well adapted to carry out the objectives and obtain the ends and advantages mentioned, as well as those inherent therein. The embodiments, methods, procedures and techniques described herein are presently representative of the preferred embodiments, are intended to be exemplary and are not intended as limitations on the scope. Changes therein and other uses will occur to those skilled in the art which are encompassed within the spirit of the invention and are defined by the scope of the appended claims. Although the invention has been described in connection with specific preferred embodiments, it should be understood that the invention as claimed should not be unduly limited to such specific embodiments. Indeed, various modifications of the

described modes for carrying out the invention which are obvious to those skilled in the art are intended to be within the scope of the following claims.

What is claimed is:

1. A security case for storing and transporting an item in a secure manner, the case comprising:

a lid coupled to a base and cooperating therewith to define a closable storage chamber;

at least one lock device located inside the case and operable to selectively maintain the lid locked in a closed condition to the base selectively resisting access to the storage chamber;

at least one electronic data input first device associated with the case;

at least one location device associated with the case and positioned therein, the location device being operable to selectively determine a location of the case;

a memory device associated with the case and positioned therein; and

a controller operably coupled to the memory device, location device, the data input first device and said lock device and operable to selectively permit said lock device to be moved to an unlocked condition when at least two of the location device and at least one first device provide acceptable first information to the controller, said controller being operable to compare the received first information to second information stored in the memory to determine if the received first information is acceptable and, if acceptable, authorizing the lock device to be unlocked and send a signal to the lock device to move to an unlocked condition.

2. The security case of claim **1** wherein the at least one first device including a plurality of said first devices.

3. The security case of claim **2** wherein said first devices including a biometric reading device and an electronic key device.

4. The security case of claim **2** wherein said controller is operable to determine if the security case location first information matches location second information in the memory to determine if the location first information is acceptable and, if so, authorize the lock device to move to an unlocked condition if the other first information is acceptable.

5. The security case of claim **3** wherein the location device is operable to provide route information to the memory device for storage, said route information including location and time of day at location.

6. The security case of claim **5** wherein the controller and memory being operable to provide an alarm if the security case is not following travel plan third information stored in the memory.

7. The security case of claim **2** including at least one first sensor coupled to the controller and memory device operable to determine if an unauthorized attempt to open the case or unauthorized opening is effected and to at least one of sound an alarm and send a signal of such event to a remote location.

8. The security case of claim **7** including at least one sensor operable to sense an attempt to physically tamper with the case.

9. The security case of claim **2** including a third device operably associated wirelessly with the controller and adapted to communicate with the controller and provide fourth information about its position relative to the case and, if too far, at least one of sound an alarm and send a signal to a remote location.

10. The security case of claim **2** wherein at least one of the first devices is a biometric sensor.

11. The security case of claim **10** wherein at least one said location device being a GPS device.

12. The security case of claim **11** wherein controller being operable to effect transmission of third information to a remote location.

13. The security case of claim **12** wherein the third information including at least one of case location, unauthorized attempts to open the case, deviation from a travel plan, and excess distance of a proximity sensor from the case.

14. The security case of claim **13** including a second biometric sensor wirelessly coupled to the processor to remotely provide biometric information to the controller.

15. The security case of claim **14** wherein said biometric information from the second biometric sensor can indicate at least one of location reached, time schedule and potential trouble for a courier.

16. The security of claim **2** wherein the portions of the lid and the base having multiple layers of material operable to resist unauthorized access to the storage chamber.

* * * * *