UNITED STATES DISTRICT COURT
WESTERN DISTRICT OF TEXAS
AUSTIN DIVISION

YONDR, INC.	§	
Plaintiff,	§	
	§	
	§	
v.	§	Civil Action No. 1:24-cv-01326-ADA
	§	
BE SMARTER, LLC, and	§	
JAMES GUERRA,	§	
Defendants.	§	

Defendants' Preliminary Invalidity Contentions

Defendants Be Smarter, LLC and James Guerra provide the following Preliminary Invalidity Contentions ("Invalidity Contentions"), which includes the accompanying claim charts, to plaintiff Yondr, Inc. pursuant to the the Court's Standing Order Governing Proceedings—Patent Cases.

I. Introduction

Yondr asserts the following patents and claims in this case as set forth in Plaintiff's Disclosure of Asserted Claims and Infringement Contentions served March 7, 2025 ("Infringement Contentions"):

- U.S. Patent No. 9,819,788 – claims 1–4, 7, and 8
- U.S. Patent No. 12,133,078 – claims 1–5, 9–11, 15, 16, and 19

The patents identified above are together referred to herein as the "Asserted Patents," and the claims identified above are together herein referred to as the "Asserted Claims."

As further detailed in and supported by these Invalidity Contentions, Defendants contend that each of the Asserted Claims is invalid under at least 35 U.S.C. §§ 101, 102, 103, and 112.

II. Amendment/Supplementation

Defendants' Invalidity Contentions pertain to the Asserted Claims as identified in Plaintiff's Infringement Contentions. To the extent that the Court later allows Plaintiff to amend its infringement contentions or assert one or more claims other than the Asserted Claims, Defendants reserve the right to modify, amend, or supplement these Invalidity Contentions accordingly to, for example, show the invalidity of any such newly asserted claims.

These Invalidity Contentions are based on Defendants' current understanding of the Asserted Claims and Plaintiff's apparent view of the scope of those claims as shown, for example, in Plaintiff's Infringement Contentions. A claim construction order has not yet been issued in this case, and in no way shall these Invalidity Contentions be taken as any admission or acquiescence by Defendants as to the proper scope of the Asserted Claims or proper claim constructions of terms and phrases recited in those claims. By identifying prior art that anticipates or renders obvious the Asserted Claims, Defendants do not admit that the claim limitations are capable of construction and do not adopt Plaintiff's apparent claim constructions or admit the accuracy of any particular claim construction. Defendants reserve all rights to later challenge or oppose any claim constructions advanced by Plaintiff and to present claim construction positions of their own.

Defendants further reserve the right to revise these Invalidity Contentions in view of the Court's construction of terms and phrases recited in one or more of the Asserted Claims, additional information obtained during discovery, additional infringement theories put forth by Plaintiff during fact or expert discovery, any findings as to the priority date(s) of the Asserted Claims, or positions that Plaintiff, its fact witnesses, or its expert witness(es) may take concerning claim construction, infringement, or invalidity issues.

Defendants further reserve the right to supplement their accompanying document production should it later discover additional prior art documents, information, testimony, prior art systems and related documentation, or software or hardware code, including information provided by third parties after the date of service of these Invalidity Contentions.

Defendants may further rely on inventor admissions concerning the scope or state of the prior art relevant to the Asserted Claims, the patent prosecution histories of the Asserted Patents, related patents or patent applications, any deposition or trial testimony of the named inventor on the Asserted Patents, and the papers filed and any evidence produced or submitted by Plaintiff in connection with this case or other related litigation. Defendants reserve the right to contend that one or more of the Asserted Claims are invalid under 35 U.S.C. § 102(f) in the event Defendants obtain evidence that the named inventor did not invent the subject matter in the Asserted Claims.

Prior art not included in these Invalidity Contentions, whether known or not known to Defendants, may become relevant. In particular, Defendants are currently unaware of the extent, if any, to which Plaintiff will contend that limitations of the Asserted Claims are not disclosed in the prior art identified in these Invalidity Contentions. Accordingly, Defendants reserve the right to identify other references that would disclose the allegedly missing limitation(s) of the claimed method, device, or system.

The references identified in these Invalidity Contentions, which include the attached claim charts, may disclose the elements of the Asserted Claims explicitly or inherently, or they may be relied upon to show the state of the art in the relevant time frame. References identified in these Invalidity Contentions, as well as the "References Cited" on the face of the Asserted Patents and any publications cited within the body of the Asserted Patents, may be used to illustrate, but not limit the scope of, the state of the art to which the Asserted Patents pertain (*i.e.*, at a time prior to the date of alleged inventions of the Asserted Claims of the Asserted Patents). Moreover, Defendants reserve the ability to rely on later-identified sources of information, including but not limited to witness testimony and other discovery, to establish the state of the art in the relevant time frame pertaining to the Asserted Patents.

Because fact discovery has not begun at the time of these Invalidity Contentions, Defendants anticipate additional prior art and invalidity bases may be found, including but not limited to through third-party discovery. Defendants' investigation and analysis of the prior art is continuing, and thus Defendants reserve the right to supplement,

amend, or revise the information provided herein as Defendants conduct further investigation and analysis, including identifying, charting, and relying on additional references.

Additionally, in view of likely third-party discovery that will be taken, Defendants reserve the right to present additional items of prior art located during discovery or further investigation. For example, Defendants expect to issue subpoenas to third parties believed to have knowledge, documents, or other evidence concerning invalidity of one or more of the Asserted Claims.

Defendants reserve the right to supplement or otherwise amend these Invalidity Contentions in response to any relevant discovery provided by third parties, Plaintiff, opening or rebuttal expert reports, fact or expert depositions, or in response to any claim construction ruling(s) issued by this Court (regardless of how and when such ruling is made). Defendants also reserve the right to supplement or otherwise amend these Invalidity Contentions in response to any rebuttal evidence disclosed by Plaintiff or as otherwise may be necessary or appropriate under the circumstances.

In addition to the positions and prior art identified in these Invalidity Contentions (including the accompanying invalidity claim charts), Defendants incorporate by reference all invalidity contentions, prior art, and invalidity claim charts (including, without limitation, all anticipation positions, obviousness positions (including all prior art combinations and motivations to combine), indefiniteness positions, and non-enablement positions) concerning one or more of the Asserted Patents, as disclosed at any time, including in previous or related litigation or United

States Patent & Trademark Office ("USPTO") proceedings, to Plaintiff, including to the named inventor and any individuals associated with the prosecution or post-grant review of one or more of the Asserted Patents. For example, Defendants incorporate by reference as if fully set forth herein the invalidity grounds, positions, arguments, and expert declarations in:

- *Yondr, Inc. v. WIN Elements LLC*, Case No. 21-cv-2105 (C.D. Cal.)
- *WIN Elements LLC and John Nguyen v. Yondr, Inc.*, Case No. 24-cv-9311 (C.D. Cal.)

Finally, Defendants intend to rely on inventor admissions concerning the scope of the prior art relevant to the Asserted Patents found in the patents themselves, the patent prosecution histories of the Asserted Patents and related patents or patent applications, any deposition testimony of the named inventors on the Asserted Patents, testimony from third party prior art authors, inventors, and witnesses, and the papers filed and any evidence submitted by Plaintiff in conjunction with this litigation.

III. Identification of Prior Art

Subject to Defendants' reservation of rights, in addition to the references cited in the proceedings identified above and the references cited on the face of the Asserted Patents, any foreign counterparts, and any patents or applications that claim priority to, from, or are the basis for a claim of priority of an Asserted Patent, the admitted prior art in the specifications and prosecution histories of the Asserted Patents, Defendants identify prior art references and products that may disclose the elements of the Asserted Claims either explicitly, inherently, or via an obviousness combination and may also be

relied upon to show the state of the art in the relevant timeframe. The exhibit numbers in the first column of the chart below identify the claim charts attached as part of these Invalidity Contentions relating to the respective prior art references. The claim charts set forth where in the prior art references each element of the Asserted Claims is found.

Exhibit No.	Patent or Publication No.	Country of Origin	Filing Date
A-1 and B-1	2003/0011466 ("Samuel")	USA	Feb. 15, 2001
A-2 and B-2	10-2007-0041248 ("Shin")	Republic of Korea	Oct. 14, 2005
A-3 and B-3	2014/0298492 ("Simpson")	USA	March 14, 2014
A-4 and B-4	2012/0187003 ("Stewart")	USA	Jan. 21, 2011
A-5 and B-5	6,499,638 ("Campbell")	USA	July 17, 2001
A-6 and B-6	6,218,929 ("Furuta")	USA	June 10, 1998
A-7 and B-7[1]	6,608,548 ("Pellaton")	USA	May 22, 1998
A-9 and B-9	2014/0041425 ("Pinzon")	USA	Feb. 13, 2014
A-10 and B-10	5,977,876 ("Coleman")	USA	Nov. 2, 1999
A-11 and B-11	7,961,914 ("Smith")	USA	June 14, 2011
A-12 and B-12	2395304 ("Metcalf")	United Kingdom	Nov. 13, 2002
A-13 and B-13	2462725 ("Farmer")	United Kingdom	Aug. 18, 2009
A-14 and B-14	2008/0191867 ("Markovich")	USA	March 25, 2006
A-15 and B-15	8,950,223 ("Joyce")	USA	Jan. 17, 2012
A-16 and B-16	6,057,779 ("Bates")	USA	Aug. 14, 1997
A-17 and B-17	8,479,922 ("Kennedy")	USA	Feb. 21, 2012
A-18 and B-18	2012/0061134 ("Kennedy II")	USA	July 13, 2011
B-19	2014/122001 ("Theobald")	WO	Jan. 20, 2014

[1] Defendants intentionally omitted charts labelled A-8 and B-8.

Defendants further identify as prior art any and all actual products and systems, as disclosed in the identified prior art references, that were known, used, or sold prior to the applicable filing dates of the Asserted Patents. Defendants' investigation of such products and systems is ongoing, and they reserve the right to seek discovery and supplement their invalidity contentions based on information learned about those products and systems. To the extent that such products and systems are as described in corresponding prior art publications, those products and systems are invalidating for the same or similar reasons that the corresponding prior art publication is invalidating. In certain cases, due to the substantial relation between a publication and a corresponding product or system, the combination of such prior art should be treated as a single reference for purposes under 35 U.S.C. § 102.

Defendants continue to investigate each of the above identified prior art references, including through potential discovery needed to be obtained via third-party subpoenas, and reserve the right to supplement these contentions and accompanying claim charts after such investigation.

IV. Statements as to Anticipation and Obviousness

Defendants contend certain prior art references below anticipate one or more Asserted Claims under 35 U.S.C. § 102 and that to the extent the identified prior art references do not anticipate the Asserted Claims, those claims are invalid as obvious under 35 U.S.C. § 103. Each anticipatory prior art reference disclosed herein, either alone or in combination with other prior art, also renders the Asserted Claims invalid as

obvious. In particular, each anticipatory prior art reference may be combined with (i) information generally known to persons skilled in the art at the time of the alleged invention, or (ii) any of the other anticipatory prior art references. To the extent Plaintiff contends any of the anticipatory prior art fails to disclose one or more limitations of the Asserted Claims, Defendants contend any difference between the reference and the corresponding patent claims would have been obvious to one of ordinary skill in the art. Moreover, to the extent Plaintiff contends that any prior art reference does not expressly disclose a limitation in an Asserted Claim, such limitations would have been inherent or obvious. Thus, Defendants' identification of anticipatory references should be interpreted as both reflecting anticipation by the reference as well as invalidity due to single reference obviousness, to the extent that Plaintiff contends that any limitation is missing.

As stated above, Defendants incorporate by reference all other invalidity contentions related to the Asserted Patents served on or otherwise made known to Plaintiff, whether past or future, including but not limited to the invalidity grounds presented in the litigation and *inter partes* review proceedings referenced above.

In *KSR International Co. v. Teleflex, Inc.*, the United States Supreme Court held that, among other things, "[t]he combination of familiar elements according to known methods is likely to be obvious when it does no more than yield predictable results." 127 S. Ct. 1727, 1739 (2007); *see also id.* at 1731 ("a court must ask whether the improvement is more than the predictable use of prior art elements according to their established functions"). In particular, a patent is obvious where "the content of the prior

art, the scope of the patent claim, and the level of ordinary skill are not in material dispute, and the obviousness of the claim is apparent in light of these factors." *Id.* at 1745–46. The Supreme Court found that "if a technique has been used to improve one device, and a person of ordinary skill in the art would recognize that it would improve similar devices in the same way, using the technique is obvious unless its actual application is beyond his or her skill." *Id.* at 1731.

Moreover, the Court recognized that market pressures will motivate a person of ordinary skill to survey known art for solutions to problems. *Id*. at 1732 ("When there is a design need or market pressure to solve a problem and there are a finite number of identified, predictable solutions, a person of ordinary skill in the art has good reason to pursue the known options within his or her technical grasp"). When a person of ordinary skill uses an identified, predictable solution to solve a problem, "it is likely the product not of innovation but of ordinary skill and common sense." *Id*.

In addition, when a work is available in one field of endeavor, design incentives and other market forces can prompt variations of it, either in the same field or a different one. *Id*. at 1740. If a person of ordinary skill can implement a predictable variation, 35 U.S.C. § 103 bars its patentability. *Id*. The rationale to combine or modify prior art references is significantly stronger when references seek to solve similar problems, come from the same field, and correspond well. *In re Inland Steel Co.*, 265 F.3d 1354, 1362 (Fed. Cir. 2001).

Although the law does not require evidence of motivation to combine, motivation exists to combine one or more of the references disclosed herein with each

other. Beyond specific motivations identified herein, motivation to modify a particular reference or to combine any two or more of the identified references comes from (a) the nature of the problem being solved, (b) the teachings of the prior art, (c) the knowledge of persons of ordinary skill in the art, (d) the fact that all of the references teach systems, apparatuses, and methods related to the subject matter and address the same technical issues described in the Asserted Patents, and (e) one would be motivated by considerations of efficiency, effectiveness, convenience, cost-savings, and accessibility, to combine the various teachings. Additionally, one would be motivated to address the alleged problems or achieve the purported objectives identified in the Background sections of the Asserted Patents.

Defendants contend that the Asserted Claims are invalid, at least under Plaintiff's apparent claim constructions, as follows:

A. U.S. Patent No. 9,819,788

- Claim 1 of the '788 patent is anticipated and/or rendered obvious by Samuel in combination with the knowledge of one of skill in the art;
- Claims 1–2 of the '788 patent are anticipated and/or rendered obvious by Simpson in combination with the knowledge of one of skill in the art;
- Claims 1, 3, and 7 of the '788 patent are anticipated and/or rendered obvious by Smith in combination with the knowledge of one of skill in the art;
- Claim 1 of the '788 patent is anticipated and/or rendered obvious by Farmer in combination with the knowledge of one of skill in the art;
- Claim 1 of the '788 patent is anticipated and/or rendered obvious by Coleman in combination with the knowledge of one of skill in the art;

- Claims 1–2 of the ’788 patent are anticipated and/or rendered obvious by Markovich in combination with the knowledge of one of skill in the art;
- Claim 2 of the ’788 patent is anticipated and/or rendered obvious by Joyce in combination with the knowledge of one of skill in the art;
- Claims 1–2 of the ’788 patent are anticipated and/or rendered obvious by Bates in combination with the knowledge of one of skill in the art;
- Claims 1–4 and 7–8 of the ’788 patent are rendered obvious by Shin in combination with the knowledge of one of skill in the art;
- Claims 1–4 and 7–8 of the ‘788 patent are rendered obvious by the knowledge of one of skill in the art and one or more of the following references: Samuel, Shin, Simpson, Stewart, Campbell, Furuta, Pellaton, Pinzon, Coleman, Smith, Metcalf, Farmer, Markovich, Joyce, Bates, Kennedy, or Kennedy II.

Specific examples of obvious combinations include, but are not limited to:

- Claims 1, 3–4 and 7 of the ’788 patent are obvious in view of Samuel or Simpson in combination with Shin, Stewart, Kennedy, or Kennedy II;
- Claim 1 of the ’788 patent is obvious in view of Furuta in combination with Samuel, Simpson, or Coleman;
- Claim 2 of the ’788 patent is obvious in view of Samuel in combination with Simpson or Metcalf or Joyce or Bates;
- Claim 2 of the ’788 patent is obvious over Pellaton in combination with Samuel or Simpson or Coleman.
- Claim 4 of the ’788 patent is obvious in view of Campbell in combination with Samuel or Simpson, in further view of Shin, Stewart, Kennedy, or Kennedy II;
- Claim 7 of the ’788 patent is obvious in view of Furuta in combination with Shin, Stewart, Kennedy, or Kennedy II in further view of Samuel, Simpson, or Coleman; and
- Claim 8 of the ’788 patent is obvious in view of Samuel, Shin, Stewart, Kennedy, or Kennedy II, in combination with Simpson or Metcalf or Joyce or Bates.

B. U.S. Patent No. 12,133,078

- Claims 1–4, 9–10 of the ’078 patent are anticipated and/or rendered obvious by Samuel in combination with the knowledge of one of skill in the art;
- Claims 1–4, 9–11, 15–16, 19 of the ’078 patent are rendered obvious by Shin in combination with the knowledge of one of skill in the art;
- Claims 1–3, 9–10 of the ’078 patent are anticipated and/or rendered obvious by Simpson in combination with the knowledge of one of skill in the art;
- Claims 1, 3, and 9 the ’078 patent are anticipated and/or rendered obvious by Coleman in combination with the knowledge of one of skill in the art;
- Claims 1, 3, 9, 11, and 15 of the ’078 patent are anticipated and/or rendered obvious by Smith in combination with the knowledge of one of skill in the art;
- Claims 1, 3, and 9 of the ’078 patent are anticipated and/or rendered obvious by Farmer in combination with the knowledge of one of skill in the art;
- Claims 1–3, and 9–10 of the ’078 patent are anticipated and/or rendered obvious by Markovich in combination with the knowledge of one of skill in the art;
- Claims 1–5, 9–11, 15–16, and 19 of the ’078 patent are rendered obvious by the knowledge of one of skill in the art and one or more of the following references: Samuel, Shin, Simpson, Stewart, Campbell, Furuta, Pellaton, Pinzon, Coleman, Smith, Metcalf, Farmer, Markovich, Joyce, Bates, Kennedy, Kennedy II, or Theobald.

Specific examples of obvious combinations include, but are not limited to:

- Claims 1, 3, and 9 of the ’078 patent are obvious in view of Furuta or Metcalf or Farmer in combination with Samuel, Simpson, Smith, or Coleman;
- Claims 4–5, 11, 15–16, and 19 of the ’078 patent are rendered obvious by Markovich in combination with Shin, Stewart, Kennedy, or Kennedy II;

- Claims 2 and 9 of the ’078 patent are obvious in view of Pellaton or Metcalf or Joyce or Bates in combination with Samuel, Simpson, Smith, or Coleman;
- Claim 4 of the ’078 patent is obvious in light of Samuel, Simpson, Smith, or Coleman in combination with Shin, Stewart, Kennedy, or Kennedy II;
- Claim 5 of the ’078 patent is obvious in light of Theobald in combination with Samuel, Simpson, or Coleman;
- Claims 10 and 15 of the ’078 patent are obvious in view of Furuta or Metcalf or Joyce or Bates in combination with Simpson, Smith, or Coleman in further combination with Shin, Stewart, Kennedy, or Kennedy II;
- Claims 11 and 15–16, 19 of the ‘078 patent are obvious in light of Samuel or Simpson in combination with Shin, Stewart, Kennedy, or Kennedy II;
- Claim 16 of the ’078 patent is obvious in light of Campbell in combination with Samuel or Simpson in further combination with Shin, Stewart, Kennedy, or Kennedy II; and
- Claim 19 of the ’078 patent is obvious in view of Pellaton in combination with Samuel, Smith, Simpson, or Coleman in further combination with Shin, Stewart, Kennedy, or Kennedy II.

To be clear, the foregoing listing is not intended to be exhaustive of all grounds which the Asserted Claims are invalid. Rather, the listing is intended to be illustrative of the various grounds establishing invalidity, in connection with any additional grounds evident from the prior art disclosures identified in the claim charts, IPR proceedings, and obviousness rationale set forth herein.

Obviousness Rationale:

Above and in the attached invalidity charts, Defendants have identified nineteen[2] references that anticipate and/or render obvious the Asserted Claims (collectively referred to herein as the "Prior Art References").

To the extent that any of the Prior Art References is deemed not to disclose one or more limitations, one of ordinary skill in the art would have been motivated to combine such prior art with the knowledge of one of skill in the art, any one or more of the other Prior Art References, or knowledge about the systems disclosed in the Prior Art References.

The Prior Art References generally disclose cases to secure valuables or locking and unlocking mechanisms used to secure valuables. A person of ordinary skill in the art would have found each of the Prior Art References to be relevant to the field of securing valuables and conducive to addressing the same or similar problems relating to how to secure valuables.

As a specific example, Samuel provides an explicit motivation to combine the flexible security device structure described in certain Prior Art References like Shin (*i.e.*, a mobile phone storage envelope), Stewart (a security device having a flexible material, *i.e.,* a pouch), Smith (portable, secured storage container), Farmer (secure soft-bodied safe), Kennedy (shielding apparatus that is a "pocket" with a single opening), Kennedy II (storage device configured to envelope its contents), or Theobald (security bag) with

[2] Eighteen of the Prior Art References are asserted as invalidating prior art against both patents. Theobald is only asserted against the '078 patent.

the locking and unlocking mechanisms described in Samuel (or other Prior Art References that describe specific locking or unlocking mechanisms (*see* below)). Specifically, Samuel notes:

> The walls that define the transportation device of the invention can be made of ***flexible plastics materials***, especially in the case of parcel type devices, or of a material such as rubber for devices ***with an "envelope" format***. . . .

Samuel, [0091]; *see also* Samuel, [0021] (envelopes or parcels).

A person of ordinary skill in the art also would have had motivation to combine one or more Prior Art References that described a similar locking case to that in Samuel, such as Simpson, Coleman, Markovich, or Joyce with one or more of Shin, Stewart, Smith, Farmer, Kennedy, or Kennedy II in order to design a case appropriately sized for the valuable of interest.

A person of ordinary skill in the art also would have been motivated to combine Prior Art References that disclose secure locking or unlocking mechanisms, such as Samuel, Simpson, Campbell, Pinzon, Metcalf, Farmer, Markovich, Joyce, or Bates with one or more other Prior Art References that disclose case structures that could be used with those secure locking or unlocking mechanisms in order to design a secure case. Many of those Prior Art References suggest using magnetic locking closures, and a person of ordinary skill in the art would thus have had a motivation to combine those references with Theobald, which teaches use of a detacher to unlock those types of closures.

A person of ordinary skill in the art also would have been motivated to combine a reference that discloses conditioning the locking or unlocking mechanism with other

Prior Art References that disclose secure cases (*see* above) in order to improve the locking or unlocking mechanism and permit remote access, particularly in the timeframes in which wireless signaling became more prevalent, which allowed the person of ordinary skill in the art to contemplate better methods for remotely controlling locking or unlocking mechanisms. For example, Furuta discloses that its automatic unlocking feature may be enabled or disabled depending on whether the user is inside or outside the signal demodulating area. Furuta, 2:15–18. As another example, Pellaton teaches use of a lock control device to allow unlocking after the passage of time and according to predetermined time conditions. Pellaton, 4:63–65, 5:64–65, 7:30, Fig. 3.

As another example of a motivation to combine, both Samuel and Shin teach ways of preventing unauthorized access to objects in such a case or envelope (at least temporarily). Samuel, [0009]–[0020]; Shin, Abstract, 6–7. Thus, a person of ordinary skill would understand these references address the same subject matter and would look to both to evaluate potential options for solving the problem of how to secure an object such as a cellphone or other valuables. Similar motivations exist for the specific combination of Samuel with Simpson (or other similar combinations). A person of ordinary skill would have been motivated to modify the Samuel case with disclosures from Simpson because Simpson describes a very similar security case that accounts for advancements in wireless signal processing and locking or unlocking mechanisms since the publication of Samuel.

The security cases disclosed in Samuel and Simpson are very similar:

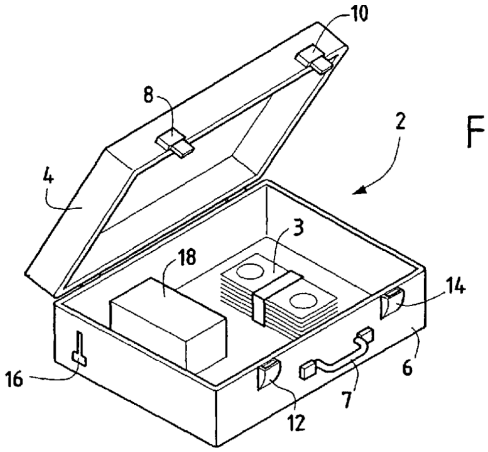

FIG.1

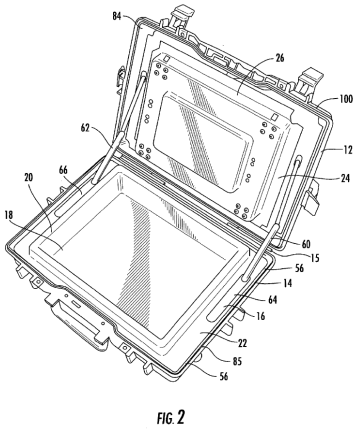

FIG. 2

Samuel **Simpson**

Samuel, Fig. 1; Simpson, Fig. 2. That is, Samuel and Simpson both describe cases, as depicted in the figures above, briefcase-type structures, designed for the secure transportation of valuable objects. Samuel, Fig. 1, [0001]–[0002],[0084], [0182]; Simpson, Fig. 2, Abstract, [0002]–[0003]. Both also teach locking mechanisms (locks **8**, **10**, **12**, **14** in Samuel and locks **28** in Simpson) that may be unlocked using electronic means. Samuel, Abstract, [0012]–[0013][0083], [0089]–[0090], [0105]–[0109], cl. 1; Simpson, [0037]–[0039]. Thus, not only are Samuel and Simpson references in the same field, but they describe nearly identical security cases. For these reasons, a person of ordinary skill would have been motivated to combine the disclosures of Samuel with those of Simpson in designing a secure case to store or transport valuables.

A person of ordinary skill looking to develop a secure case for electronic devices would also consider variations on the predetermined conditions for unlocking the case, including by review of similar references. Both Samuel and Simpson teach that unlocking may be dependent on certain conditions. Samuel, [0073], [0109], [0124]–

[0125], [0137]–[0141]; Simpson, Abstract, [0039], [0045], [0056]. For example, Samuel teaches the case's status may be monitored, including by GPS, and a person of ordinary skill in the art would understand Samuel to teach location may be a condition used to determine whether to send the unlock signal to the electronic means for unlocking. Samuel, [0012]–[0013], [0038], [0067]–[0069], [0073], [0124]–[0125], [0174]–[0178]. Specifically, Samuel discloses the predetermined condition could be that the destination of the case has been reached. Samuel, [0123]–[0125], [0173]–[0176]. Simpson similarly teaches its electronic key may be programmed to open the case depending on location, including through the use of GPS location. Simpson, Abstract, [0008], [0039]–[0040], [0043], [0053], [0045], [0056].

Each of Samuel, Shin, and Simpson teach using timing as a condition, which provides a motivation to combine the teachings of these references (as well as references that include similar teachings). Shin discloses the use of a timing means to block radio waves from entering the envelope until a set time has expired. Shin, 9. Simpson teaches an electronic key may be programmed to open the case conditioned on time. Simpson, Abstract, [0008], [0039]. Samuel also contemplates timing as an aspect of programming a security case. Specifically, Samuel discloses that once the signal authorizing opening the case is received, the contents must be removed within a "particular time interval" or the case will lock again. Samuel, [0137]–[0141]. Samuel thus acknowledges timing is a consideration for lock and unlock signals, and it would be a natural extension of Samuel for a person of ordinary skill to condition opening of the case on the passage of time as described in Simpson. Thus, a person of ordinary skill would have been motivated to

start with Samuel, which pre-dates Simpson, and modify the Samuel case to account for alternative conditions for triggering the electronic key to unlock the case, including using the passage of time as the condition.

As detailed in these contentions, all the elements of the Asserted Claims were known in the prior art, and it would have been obvious to one of ordinary skill in the art to combine the elements in the claimed arrangement under the rationale set forth in *KSR*, and particularly because the prior art arises out of the same goal of securing valuables.

V. Claim Charts with Specific References to Prior Art

Invalidity charts identifying exemplary citations to and disclosures in the references identified in Section III supra as to the Asserted Claims of the Asserted Patents are provided in attached Exhibits A-1 to A-18 (the '788 Patent) and Exhibits B-1 to B-19 (the '078 Patent).[3]

Where a reference discloses, either expressly or inherently, each of the limitations of a particular claim, that references anticipates that claim. To the extent that a reference is deemed not to have disclosed a particular claim limitation, Defendants contend that reference can be combined with one or more other references shown in the relevant chart as disclosing that claim limitation, based on what would have been obvious to one of ordinary skill in that art and for at least the reasons provided in Defendants' invalidity contentions.

[3] Exhibits A-8 and B-8 were intentionally omitted and therefore are not part of the attached exhibits.

Defendants have identified relevant portions and features of the prior art. However, the identified prior art may contain additional disclosures of the claim limitations, regardless of whether cumulative with identified portions. Defendants may rely on uncited portions or features of the identified prior art, other documents, and expert testimony, to provide context or to aid in understanding the identified prior art and the state of the art. Citations to a particular figure in a reference include the caption and description of the figure and any text relating to the figure. Similarly, citations to particular text referring or relating to a figure include the figure and caption as well. Throughout the invalidity claim chart exhibits, Defendants provide examples of where references disclose subject matter recited in preambles of the Asserted Claims, regardless of whether the preambles limit the claims. Defendants reserve the right to argue that the preambles are or are not limitations. Further, where an entry in a claim chart corresponding to a given limitation refers back to the discussion of another claim, the entry incorporates all evidence cited for the other claim.

Correspondence between claim language of the Asserted Patents and disclosures in prior art references shall not imply or be taken as any admission regarding whether the claim language has patentable weight or meets the requirements of 35 U.S.C. § 112.

VI. Invalidity under 35 U.S.C. § 112

Defendants identify below the limitations that render the Asserted Claims invalid based on indefiniteness under 35 U.S.C. § 112, ¶ 2.[4] These contentions shall not be construed as an admission that any claim construction advanced by Defendants is in any way inconsistent, flawed, or erroneous. Nor should these contentions prevent Defendants from advancing claim construction or non-infringement positions in lieu of, or in addition to, its invalidity positions. Defendants' contentions under 35 U.S.C. § 112 may depend on the Court's claim constructions, inventor testimony, as well as Plaintiff's asserted claim scope. Thus, Defendants reserve the right to supplement the grounds under 35 U.S.C. § 112 rendering one or more claim invalid.

A claim is invalid for indefiniteness under 35 U.S.C. § 112, ¶ 2 if the claim "when read in light of the specification delineating the patent, and the prosecution history, fail[s] to inform, with reasonable certainty, those skilled in the art about the scope of the invention. *Nautilus, Inc. v. Biosig Instruments, Inc.*, 134 S.Ct. 2120, 2124 (2014).

Defendants contend that each of the following limitations renders its respective claim invalid for indefiniteness:

First, claims 1 and 2 of the '788 Patent refer to "**the predetermined condition**" without any antecedent basis. These claims use the definite article "the" when referring to some predetermined condition without explaining or describing what "***the***

[4] The Court's Standing Order Governing Proceedings—Patent Cases do not require disclosure at this time of Defendants' contentions regarding invalidity for lack of enablement. Defendants reserve all rights to assert invalidity for lack of enablement for any Asserted Claim in the future, including specifically in any expert report submitted that addresses invalidity.

predetermined condition" is or what role it plays in the claimed device contrary to 35 U.S.C. § 112, ¶ 2.

Second, claim 2 of the '788 Patent refers to "**the passage of time**" without any antecedent basis. Again, this asserted claim does not explain or describe what constitutes "***the*** passage of time" contrary to 35 U.S.C. § 112, ¶ 2.

Third, Plaintiff's assertion that manual locking or unlocking of the case meets the limitations of the Asserted Claims also renders those claims indefinite under 35 U.S.C. § 112 for failure to reasonably define the scope of phrases such as "**locking means**," "**unlocking means**," and "**predetermined condition**" in the '788 Patent (*see, e.g.*, claims 1-4, 7, and 8) and phrases such as "**configured to unlock** . . . **based on a predetermined condition/ in accordance with a predetermined condition**" in the '078 Patent (*see, e.g.*, claims 1, 5, and 9).

VII. Invalidity under 35 U.S.C. § 101

While the scope of subject matter eligible for patenting under 35 U.S.C. § 101 is broad, abstract ideas, mental processes, and natural phenomena are not patent-eligible because they are "the basic tools of scientific and technological work." *Mayo Collaborative Servs. v. Prometheus Labs., Inc.*, 566 U.S. 66, 71 (2012) (quoting *Gottschalk v. Benson*, 409 U.S. 63, 67 (1972)). To apply the abstract idea exception to patent eligibility, courts employ a two-step analysis:

First, determine whether the claims at issue are directed to a patent-ineligible concept; and, if so, second, determine whether the claim has an "inventive concept" — "an element or combination of elements that is 'sufficient to ensure that the patent in

practice amounts to significantly more than a patent upon the ineligible concept itself. *Alice Corp. v. CLS Bank Int'l*, 573 U.S. 208, 217–218 (2014) (quoting *Mayo*, 566 U.S. at 72, 77–79).

To the extent, Plaintiff argues its patents extend to a human being deciding when to unlock the pouch and then, simply, unlocking the pouch, these patents are invalid in light of 35 U.S.C. § 101, and *Alice Corp. v. CLS Bank Int'l*, 573 U.S. 208 (2014). Simply unlocking a room, door, case, box, pouch, or anything when a person deems it appropriate is nothing more than a thousands-of-years-old abstract idea. Put another way, storing valuables in a locked vessel and unlocking that vessel only under certain circumstances is a well-understood, routine, and conventional idea.

For example, Plaintiff cannot seriously claim its patents would cover a bank officer unlocking a bank safety deposit box upon a customer satisfying a condition (such as presenting suitable identification at a suitable location) or a jail guard unlocking a prisoner's cell after a set amount of time expired (such as after a set period of confinement expired). By this logic, even the age-old concept of storing historical items in a "time capsule" and then opening that capsule after a pre-designated passage of time would be covered by Plaintiff's patents.

VIII. Document Production

Defendants concurrently produce prior art and technical documents in connection with these Invalidity Contentions bearing Bates Nos. BESM 000001 to BESM 000317.

Defendants' search for prior art references, additional documentation, and corroborating evidence concerning prior art systems and devices is ongoing. Accordingly, Defendants reserve the right to supplement its production as it during the course of discovery obtains additional prior art references, documentation, or corroborating evidence concerning invalidity.

Date: April 14, 2025

By: */s/ Leisa Talbert Peschel*

Leisa Talbert Peschel
Texas Bar No. 24060414
lpeschel@jw.com
JACKSON WALKER LLP
1401 McKinney St. Suite 1900
Houston, TX 77010
Telephone: (713) 752-4278
Fax: (713) 308-4178

Arthur Gollwitzer III
Texas Bar No. 24073336
agollwitzer@jw.com
JACKSON WALKER LLP
100 Congress Avenue, Suite 1100
Austin, TX 78701
Telephone: (512) 236-2000
Fax: (512) 236-2002

Counsel for Defendants Be Smarter, LLC and James Guerra

Certificate of Service

I, Leisa Talbert Peschel, an attorney of record in this matter, hereby certify that on April 14, 2025, I caused the following document:

Defendant's Invalidity Contentions

To be served on the following counsel of record by email delivery.

Joshua L. Raskin
Anne M. Rock
Omar A. Nesheiwat
GREENBERG TRAURIG, LLP
One Vanderbilt Ave.
New York, NY 10017
RaskinJ@gtlaw.com
Annie.rock@gtlaw.com
Omar.nesheiwat@gtlaw.com

Matthew J. Levinstein
GREENBERG TRAURIG LLP
77 West Wacker Dr. Suite 3100
Chicago, IL 60601
(312) 456-1039
Levinsteinm@gtlaw.com

Counsel for Yondr, Inc.

/s/ Leisa T. Peschel
Leisa T. Peschel