United States Patent [19]

Lavender

[11] **Patent Number: 4,898,675**

[45] **Date of Patent: Feb. 6, 1990**

[54] **SYSTEM AND METHOD FOR CONTINUOUSLY FRACTIONATING BLOOD IN SITU**

[76] Inventor: **Ardis R. Lavender,** 15 Deerfield Rd., Chappaqua, N.Y. 10514

[21] Appl. No.: **809,923**

[22] Filed: **Dec. 16, 1985**

Related U.S. Application Data

[63] Continuation-in-part of Ser. No. 523,007, Aug. 15, 1983.

[51] **Int. Cl.**[4] **B01D 13/00**

[52] **U.S. Cl.** **210/651;** 210/90; 210/321.65; 210/321.75

[58] **Field of Search** 210/927, 321.1, 433.2, 210/321.2, 321.3, 87, 651, 90, 434, 101, 456, 321.65, 321.75

[56] **References Cited**

U.S. PATENT DOCUMENTS

4,464,172	8/1984	Lichtenstein	128/DIG. 13 X
4,469,593	9/1984	Ishihara et al.	210/321.1 X
4,582,598	4/1986	Bilstad et al.	210/927 X
4,657,529	4/1987	Prince et al.	604/6
4,668,400	5/1987	Veech	210/96.2 X
4,729,829	3/1988	Duggins	210/321.8 X

Primary Examiner—Frank Spear

Attorney, Agent, or Firm—Emrich & Dithmar

[57] **ABSTRACT**

A system, method and device for continuously fractionating blood in situ. The fractionating device is connected in a closed loop to the donor and includes interleaved blood plates and blood fraction plates separated by a semipermeable membrane. Grooves in the plates direct blood flow and blood fraction collection. Uniform distribution among the plates and intraplate is obtained by manifolds.

The input and output pressures of the blood pump are sensed and inputed to an microprocessor, into which donor data including weight, sex, and hematocrit is also keyed by the user. The microprocessor operates under program control to calculate, based on the donor data, the amount of plasma to be collected and the amount of anticoagulant to be added. The program controls the operation of the extracorporeal devices, regulates the operating parameters, and stops the procedure when the predetermined amount of plasma has been obtained.

48 Claims, 12 Drawing Sheets

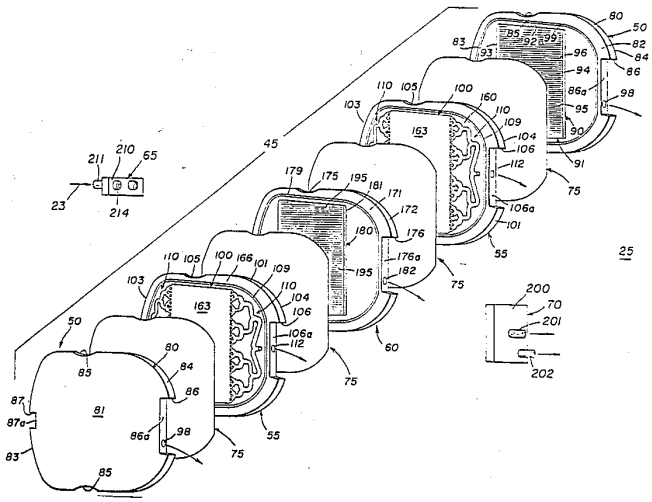

Terumo v. Haemonetics - PGR2025-00077
Petitioner Terumo Exhibit 1004-0001

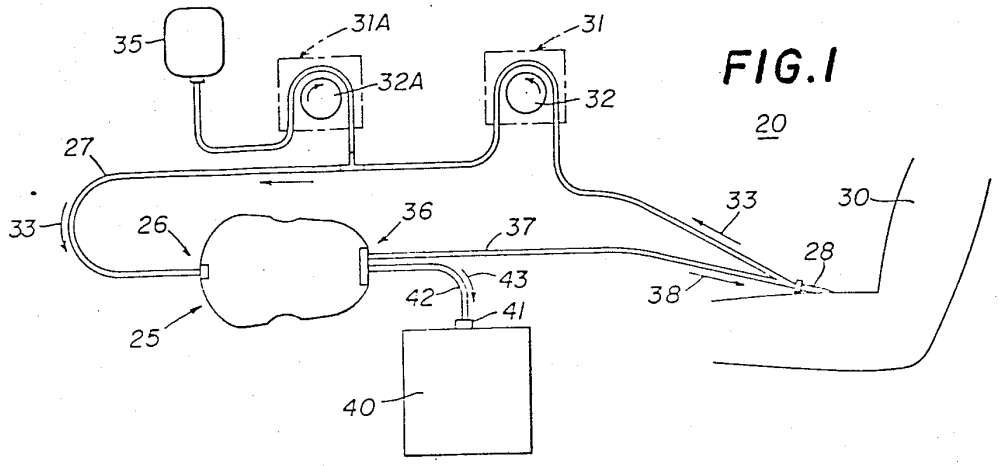
FIG.1
35
31A
31
32A
32
20
27
33
26
36
37
33
30
28
43
42
41
38
25
40

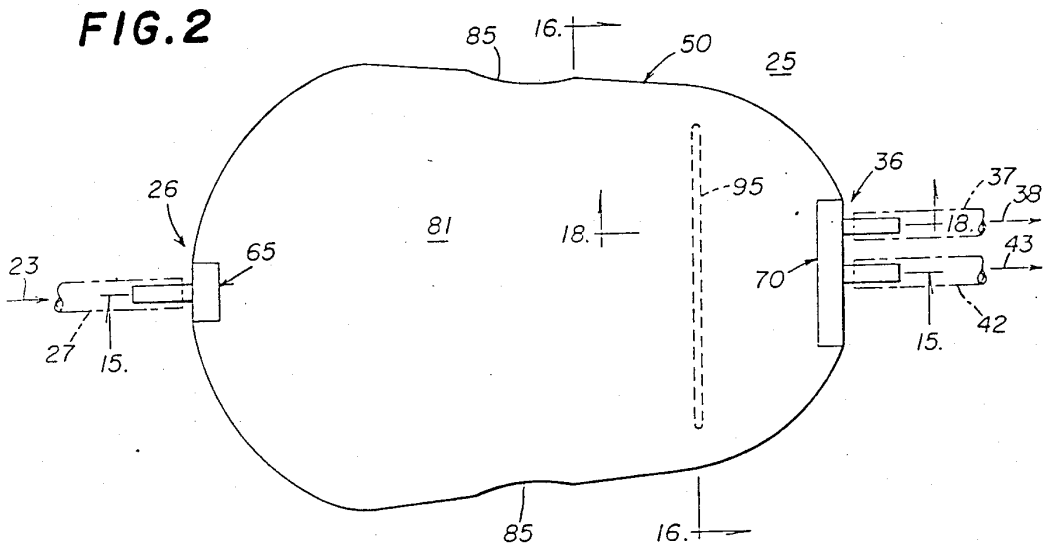
FIG.2
85
16.
50
25
26
95
36
37
38
81
18.
18.
23
65
43
70
42
27
15.
15.
85
16.

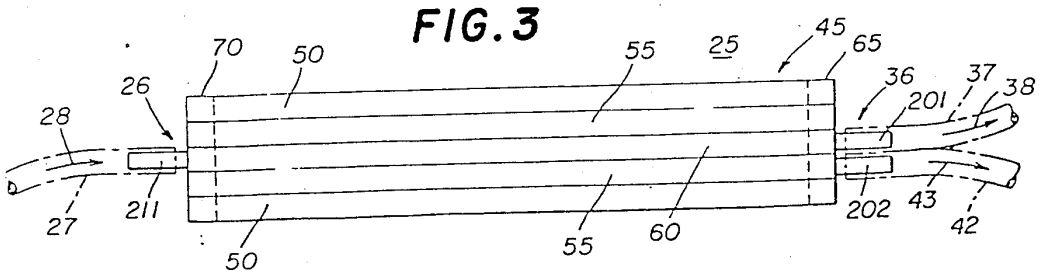
FIG.3
70
50
55
25
45
65
26
36
37
38
201
28
27
211
202
43
42
50
55
60

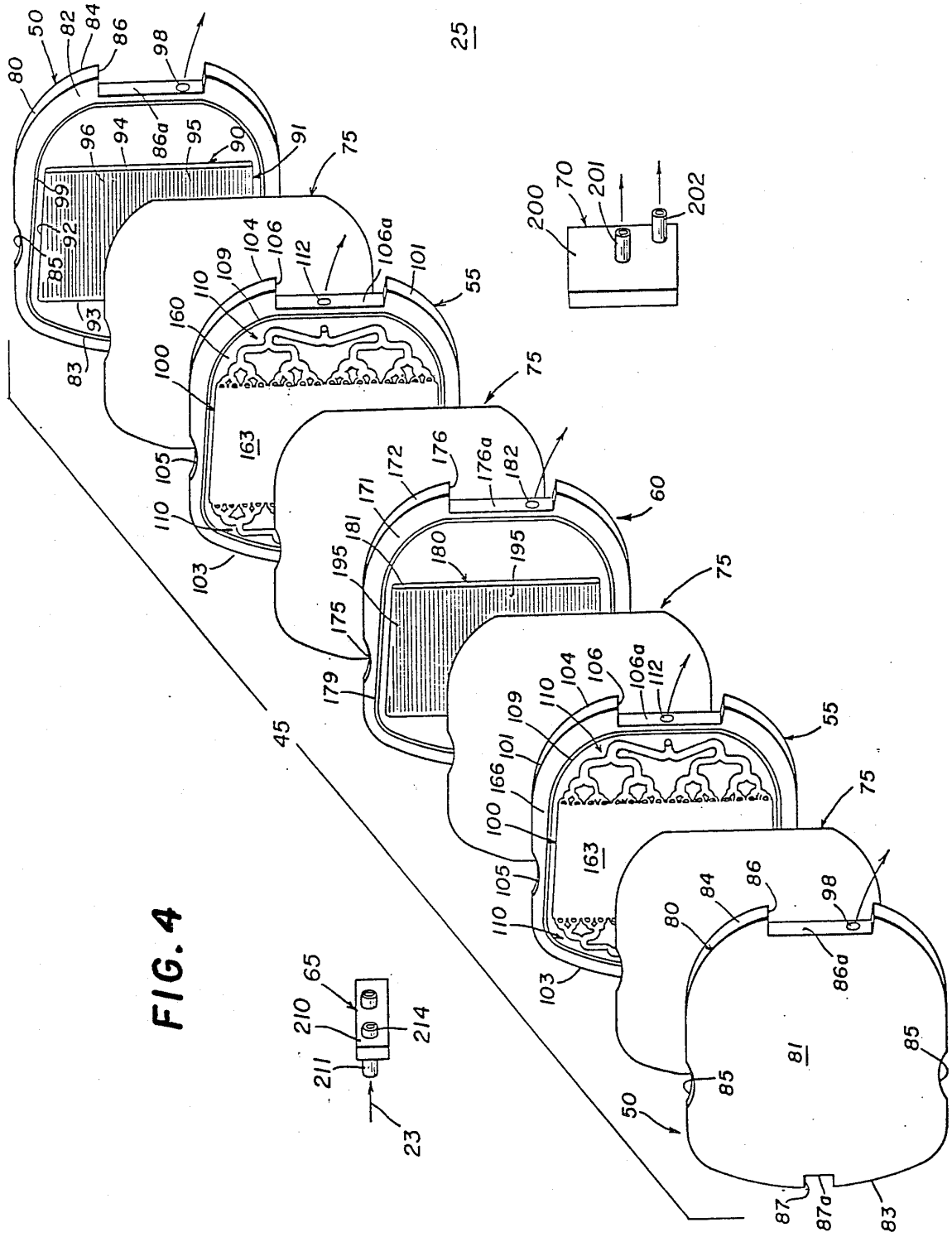
25
50
82
84
86
98
80
96
94
86a
95
90
91
75
99
92
85
93
83
100
160
110
109
104
106
112
106a
101
55
105
163
103
172
176
176a
182
171
181
180
195
175
179
60
45
166
65
210
214
211
23
200
70
201
202
81
87
87a

FIG. 4

FIG. 5

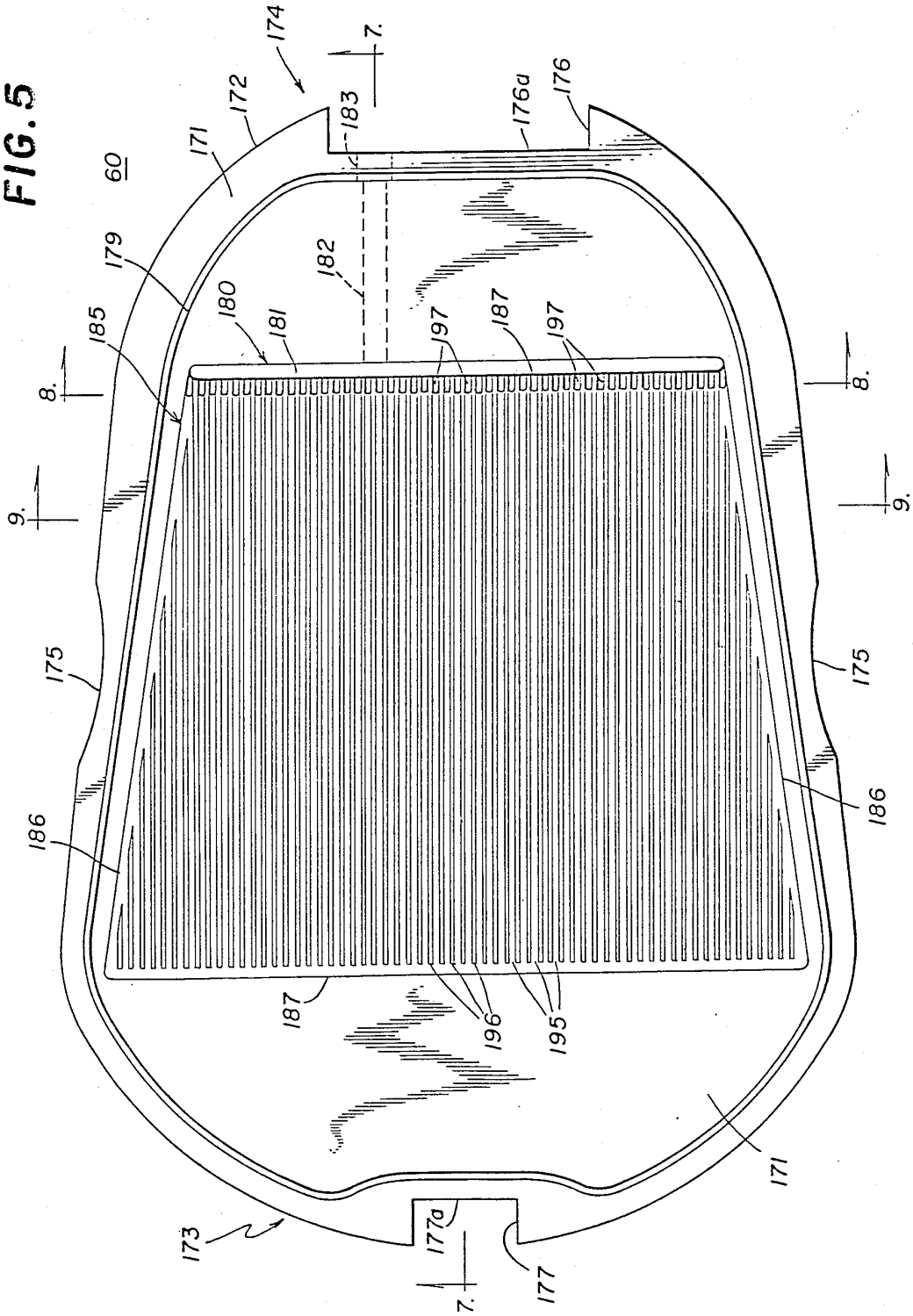

Terumo v. Haemonetics - PGR2025-00077
Petitioner Terumo Exhibit 1004-0004

FIG. 6

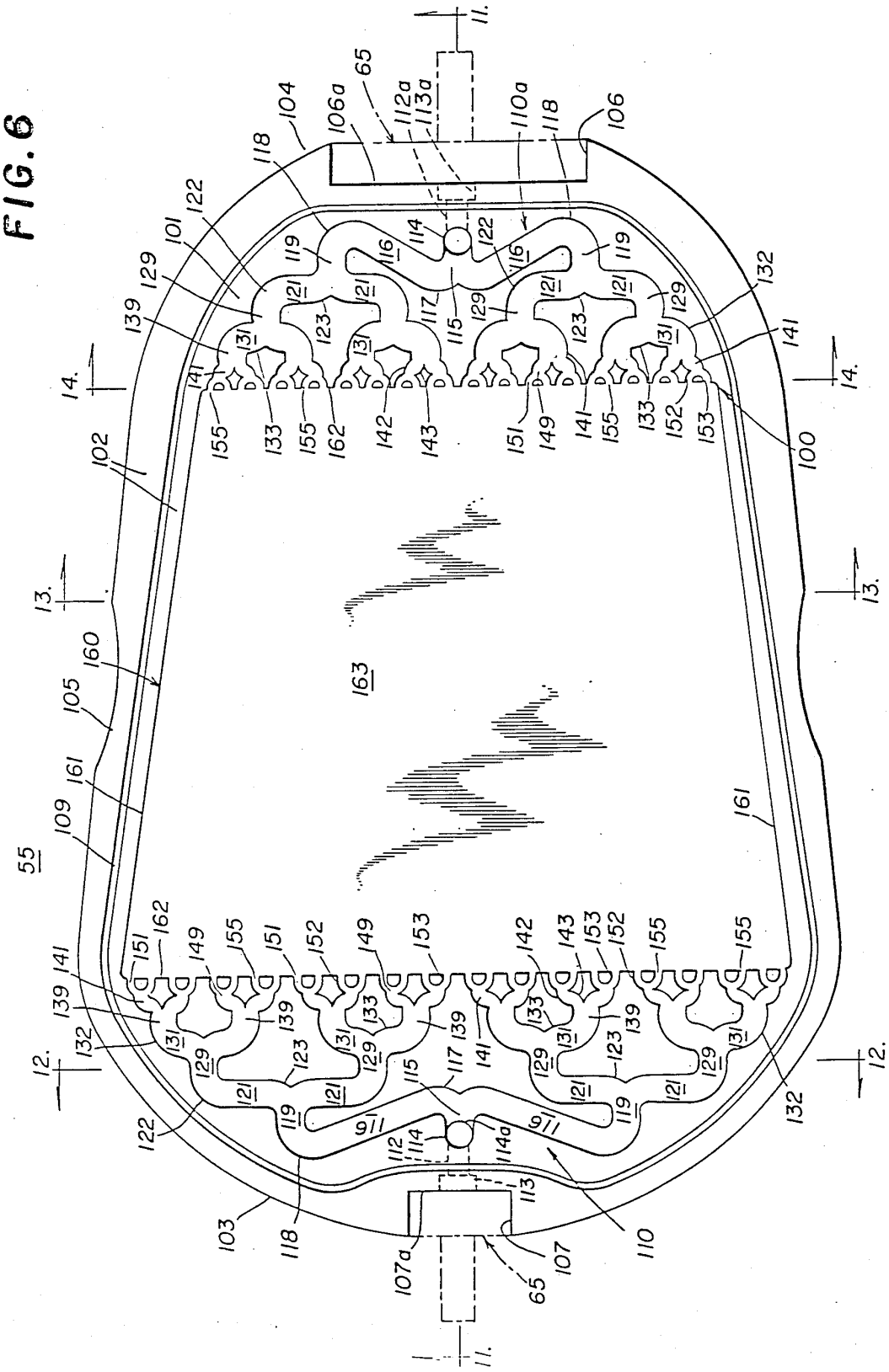

Terumo v. Haemonetics - PGR2025-00077
Petitioner Terumo Exhibit 1004-0005

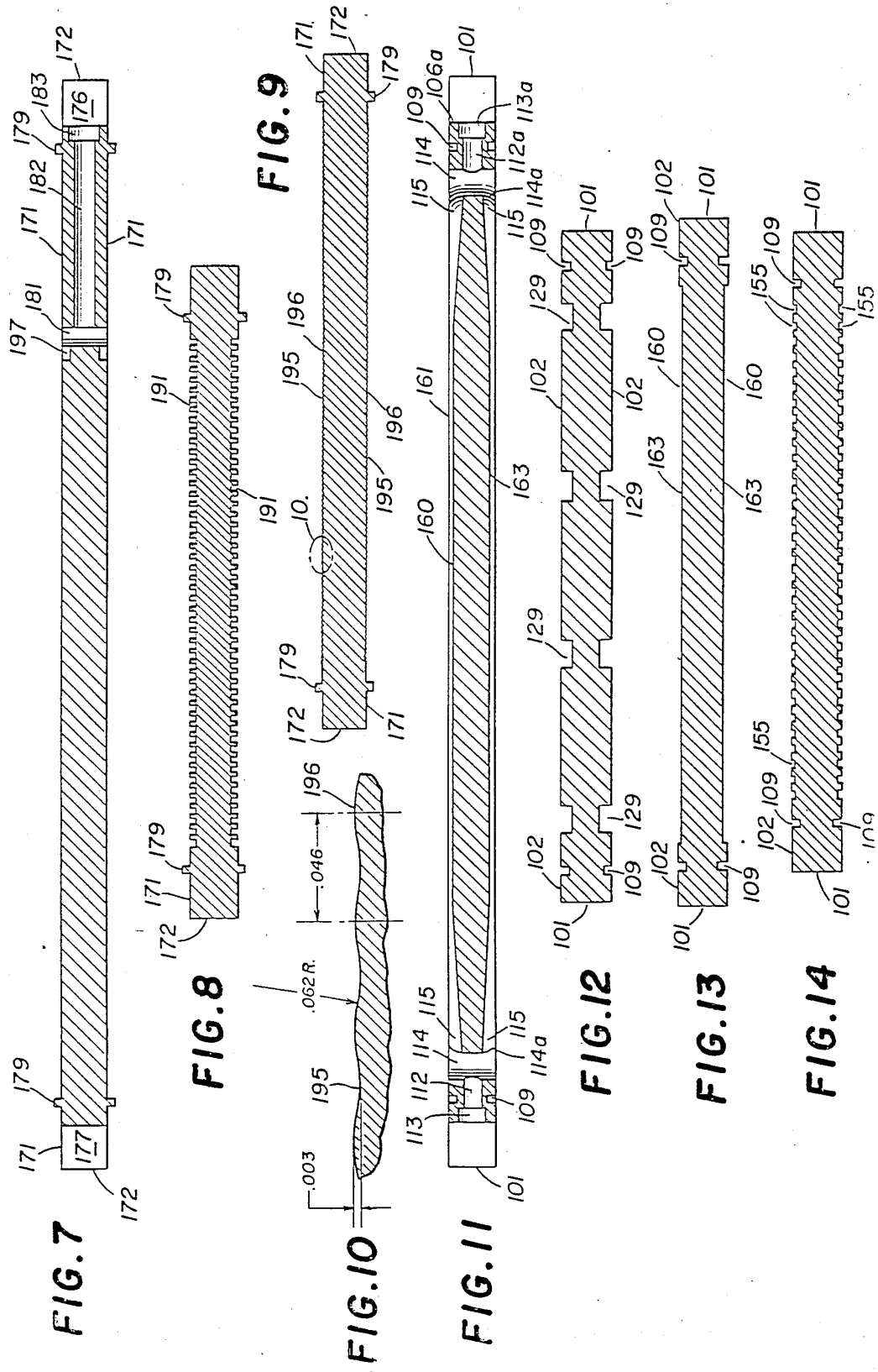
FIG. 7
FIG. 8
FIG. 9
FIG. 10
FIG. 11
FIG. 12
FIG. 13
FIG. 14
.062 R.
.046
.003

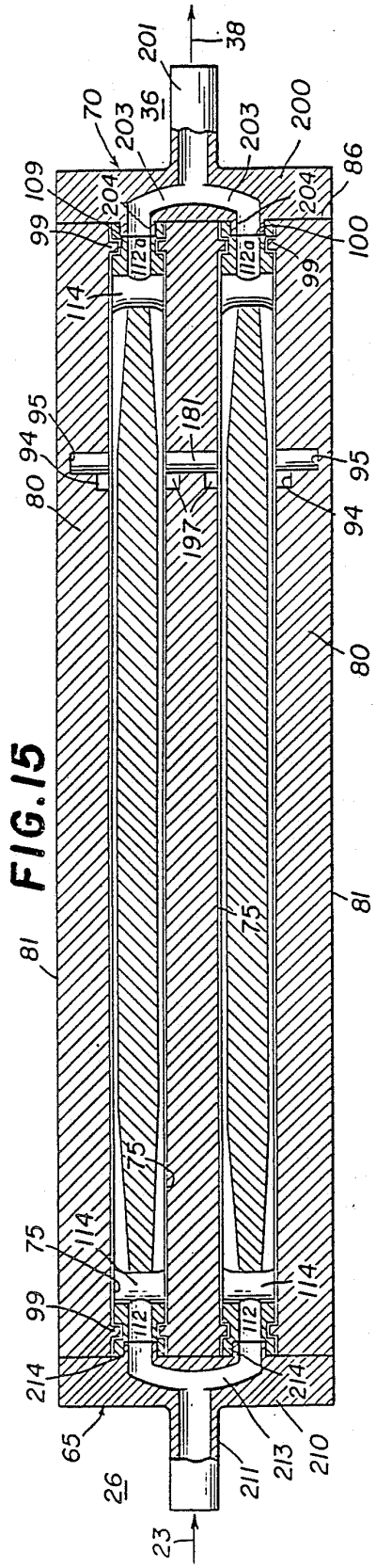
FIG. 15

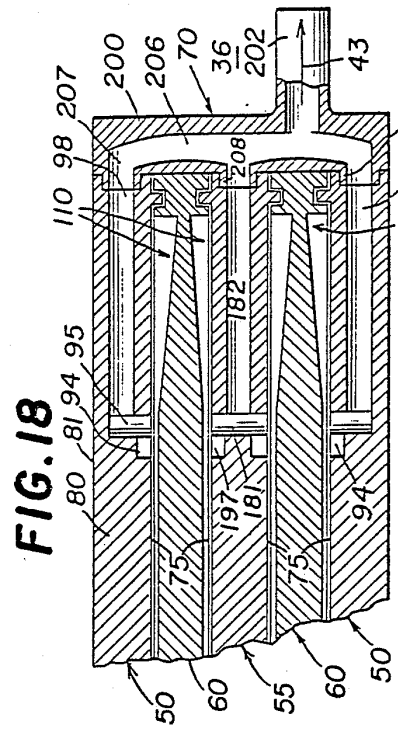
FIG. 18

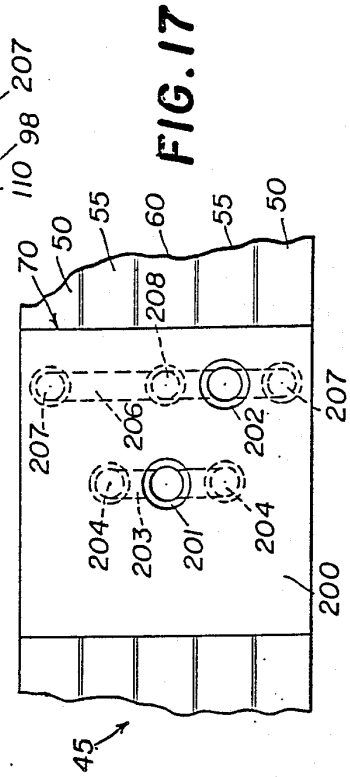
FIG. 17

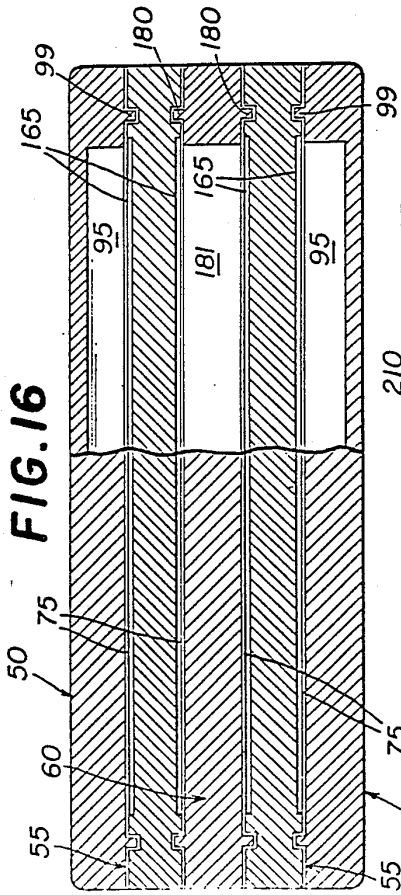
FIG. 16

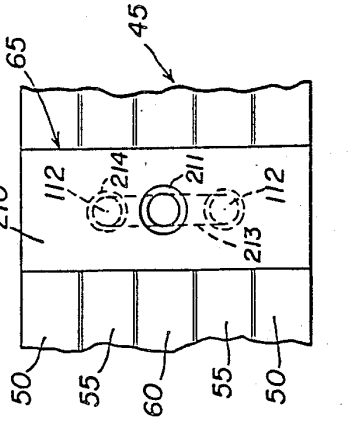
FIG. 19

FIG. 20

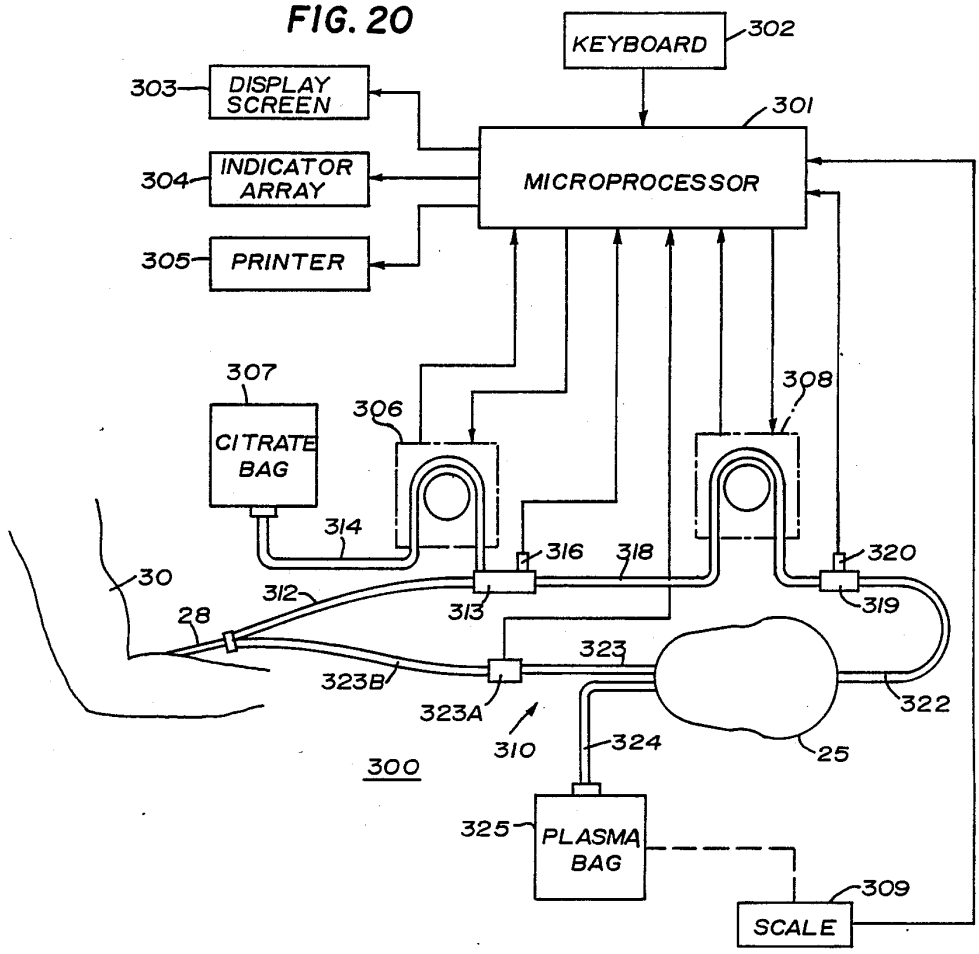
KEYBOARD
302
303
DISPLAY SCREEN
301
304
INDICATOR ARRAY
MICROPROCESSOR
305
PRINTER
307
308
306
CITRATE BAG
314
316
318
320
30
312
313
319
28
323
323B
323A
322
310
324
25
300
325
PLASMA BAG
309
SCALE

FIG. 24

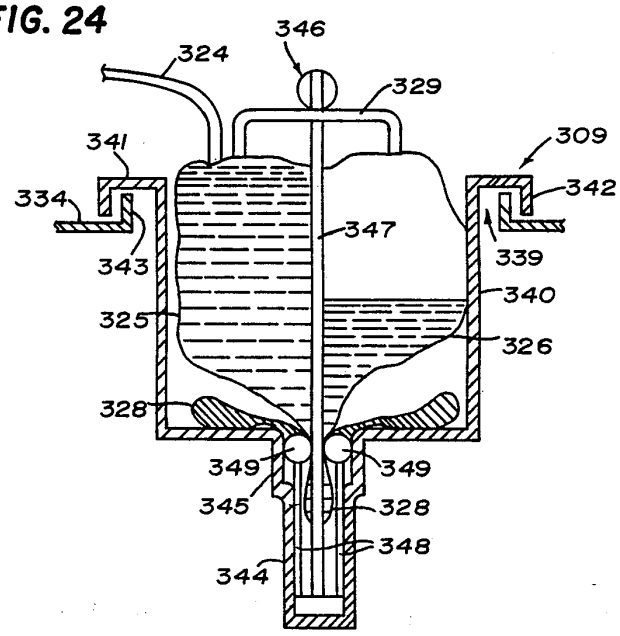
346
324
329
341
309
334
342
347
343
339
340
325
326
328
349
349
345
328
348
344

FIG. 21

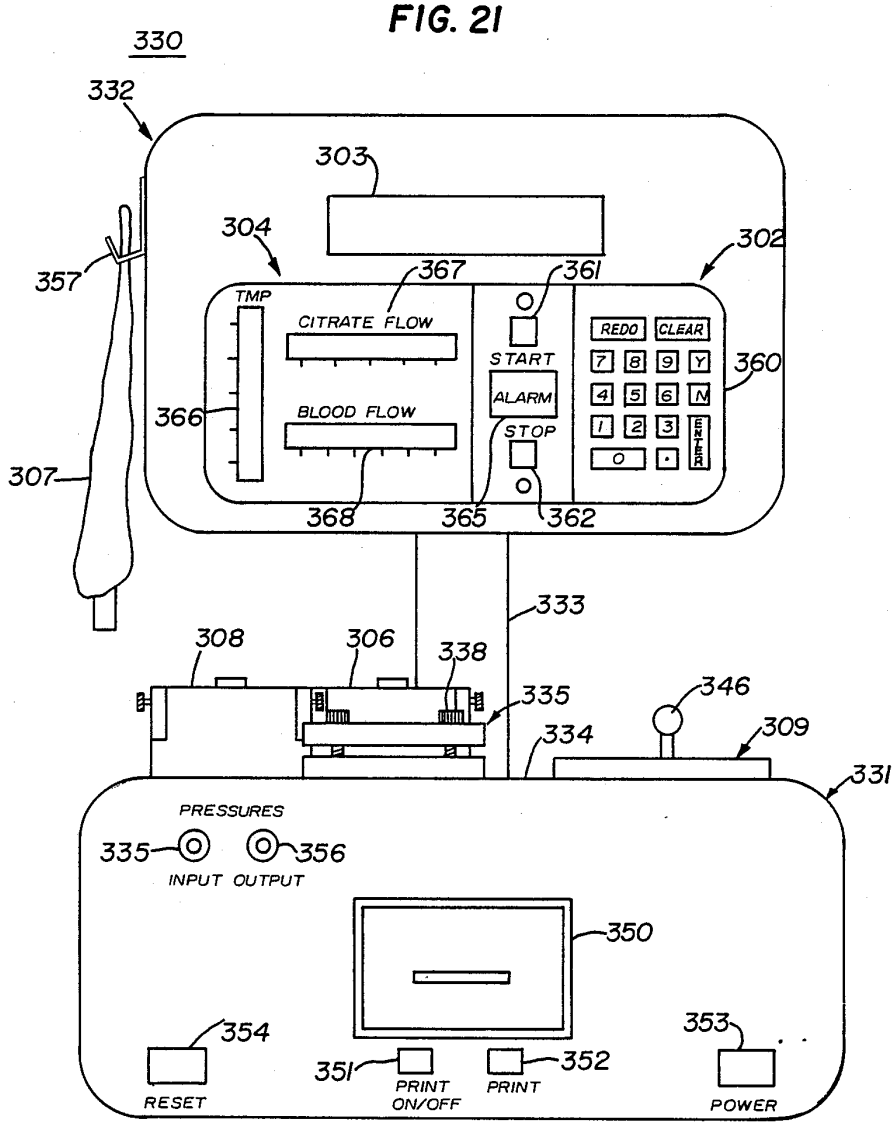
330
332
303
304
302
357
367
361
TMP
CITRATE FLOW
START
REDO
CLEAR
360
ALARM
366
BLOOD FLOW
STOP
307
368
365
362
333
308
306
338
335
346
334
309
331
PRESSURES
335
356
INPUT OUTPUT
350
354
353
351
352
RESET
PRINT ON/OFF
PRINT
POWER

FIG. 22

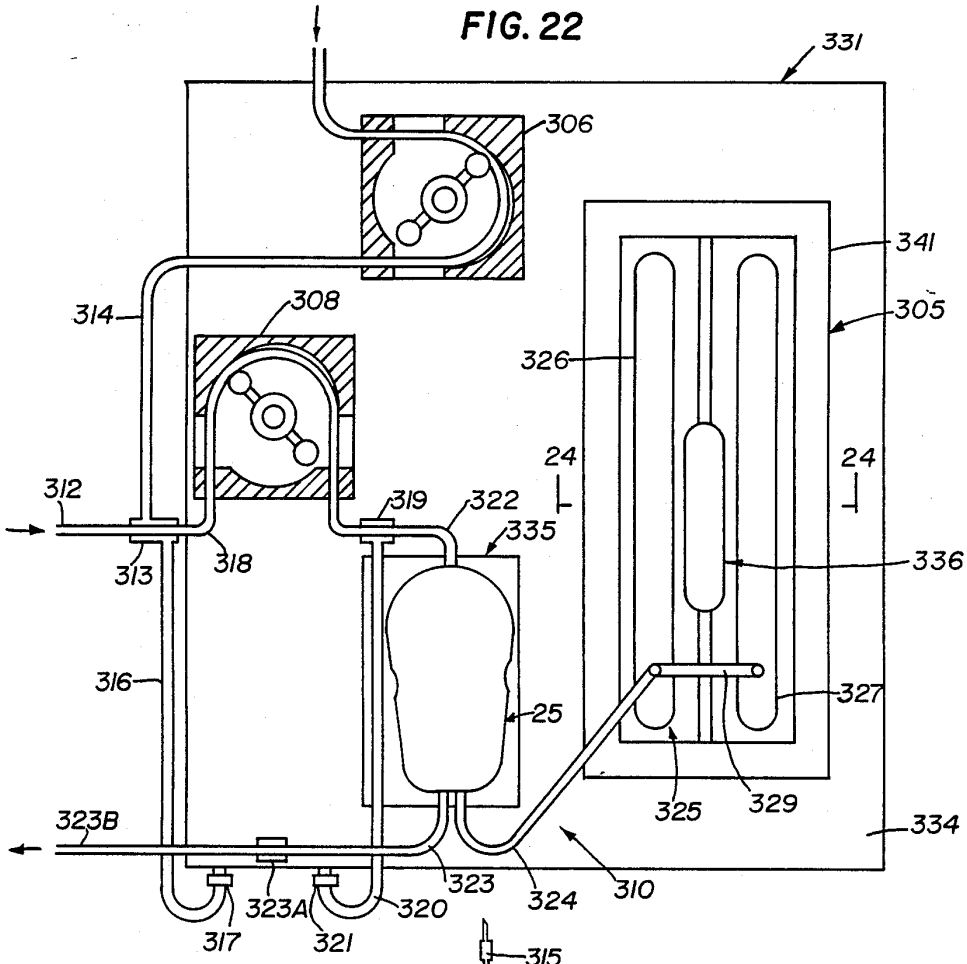
331
306
341
305
314
308
326
24
24
312
319
322
335
336
313
318
316
25
327
325
329
323B
334
323
324
310
323A
320
317
321

FIG. 23

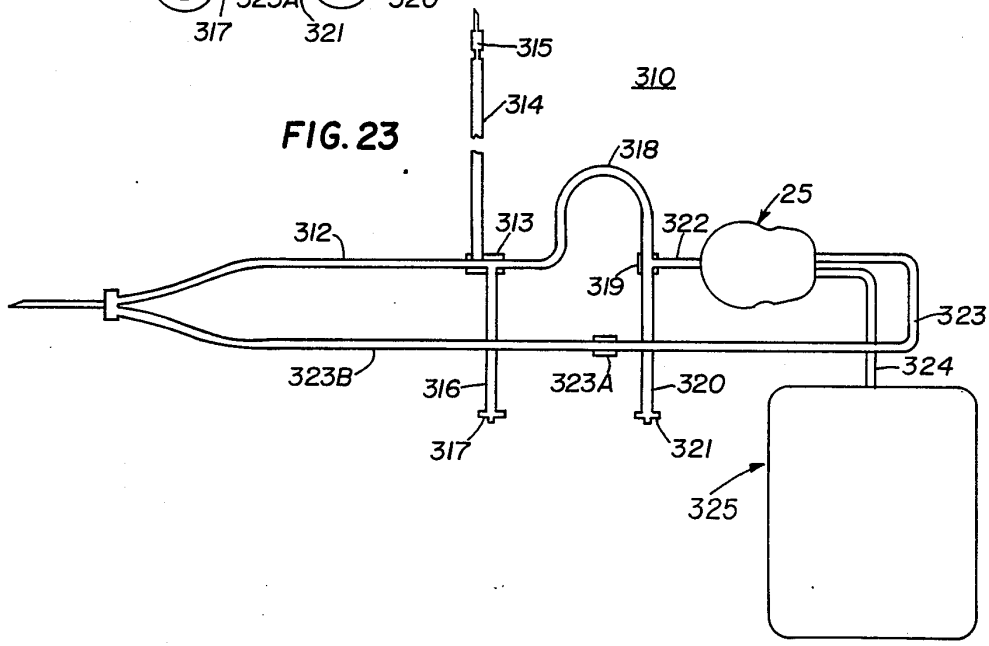
315
310
314
318
25
312
313
322
319
323
323B
316
323A
320
324
317
321
325

FIG. 25A

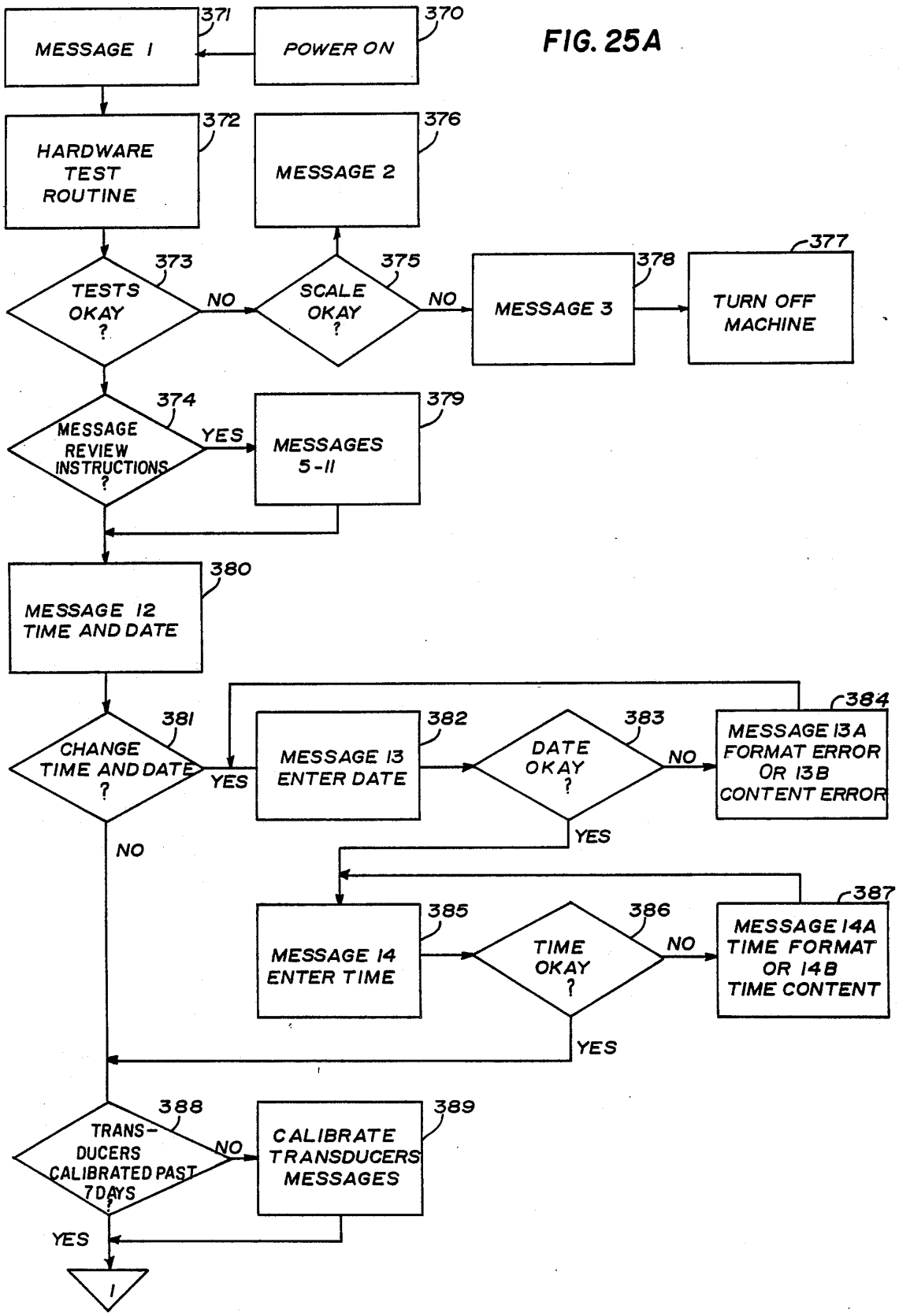
MESSAGE 1
371
POWER ON
370
HARDWARE TEST ROUTINE
372
MESSAGE 2
376
TESTS OKAY ?
373
NO
SCALE OKAY ?
375
NO
MESSAGE 3
378
TURN OFF MACHINE
377
MESSAGE REVIEW INSTRUCTIONS ?
374
YES
MESSAGES 5-11
379
MESSAGE 12 TIME AND DATE
380
CHANGE TIME AND DATE ?
381
YES
MESSAGE 13 ENTER DATE
382
DATE OKAY ?
383
NO
MESSAGE 13A FORMAT ERROR OR 13B CONTENT ERROR
384
YES
NO
MESSAGE 14 ENTER TIME
385
TIME OKAY ?
386
NO
MESSAGE 14A TIME FORMAT OR 14B TIME CONTENT
387
YES
TRANS-DUCERS CALIBRATED PAST 7 DAYS ?
388
NO
CALIBRATE TRANSDUCERS MESSAGES
389
YES
1

FIG. 25B

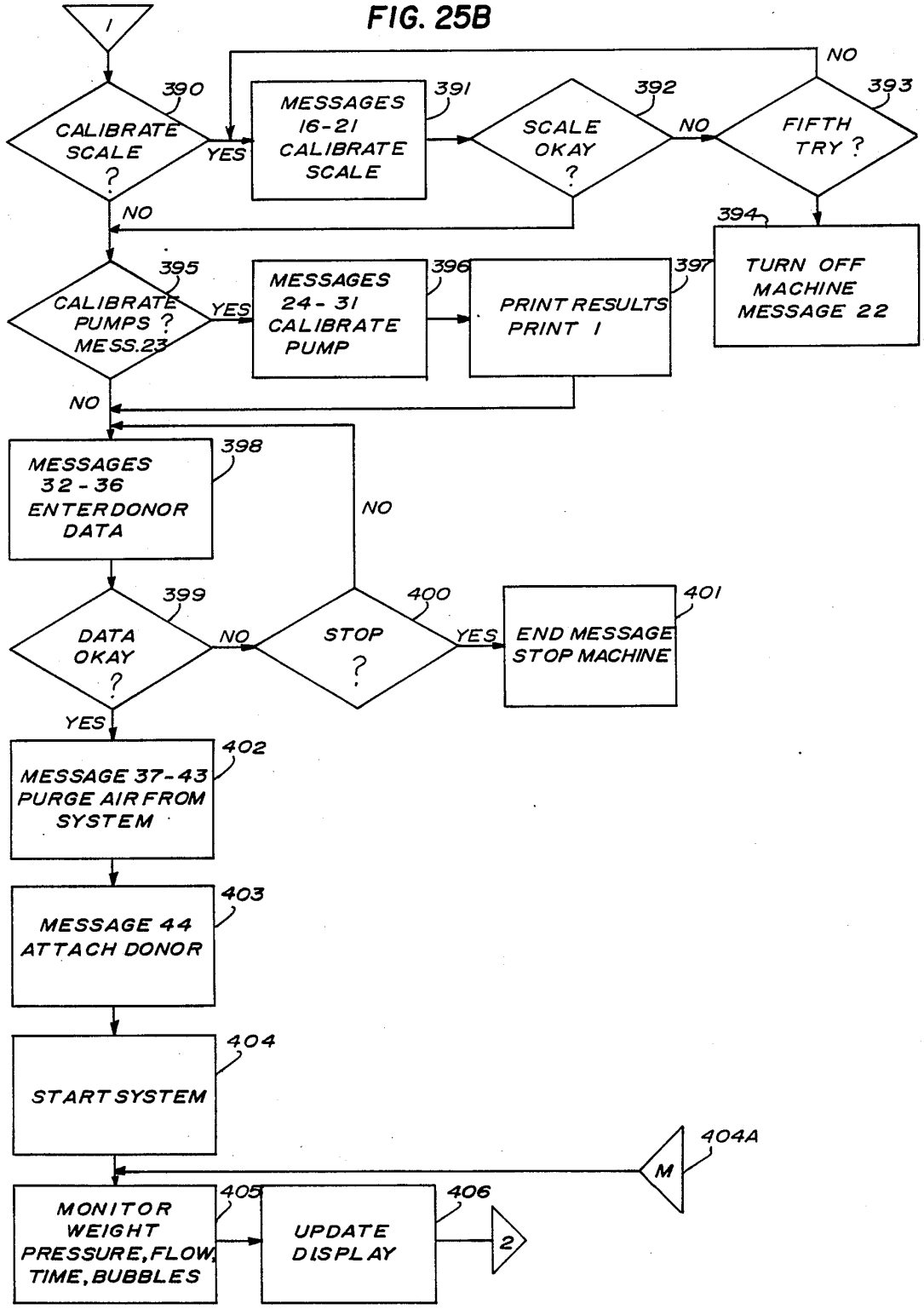
1
390
CALIBRATE SCALE ?
YES
NO
391
MESSAGES 16-21 CALIBRATE SCALE
392
SCALE OKAY ?
NO
393
FIFTH TRY ?
NO
394
TURN OFF MACHINE MESSAGE 22
395
CALIBRATE PUMPS ? MESS.23
YES
NO
396
MESSAGES 24-31 CALIBRATE PUMP
397
PRINT RESULTS PRINT 1
398
MESSAGES 32-36 ENTER DONOR DATA
NO
399
DATA OKAY ?
NO
YES
400
STOP ?
YES
401
END MESSAGE STOP MACHINE
402
MESSAGE 37-43 PURGE AIR FROM SYSTEM
403
MESSAGE 44 ATTACH DONOR
404
START SYSTEM
404A
M
405
MONITOR WEIGHT PRESSURE, FLOW, TIME, BUBBLES
406
UPDATE DISPLAY
2

FIG. 25C

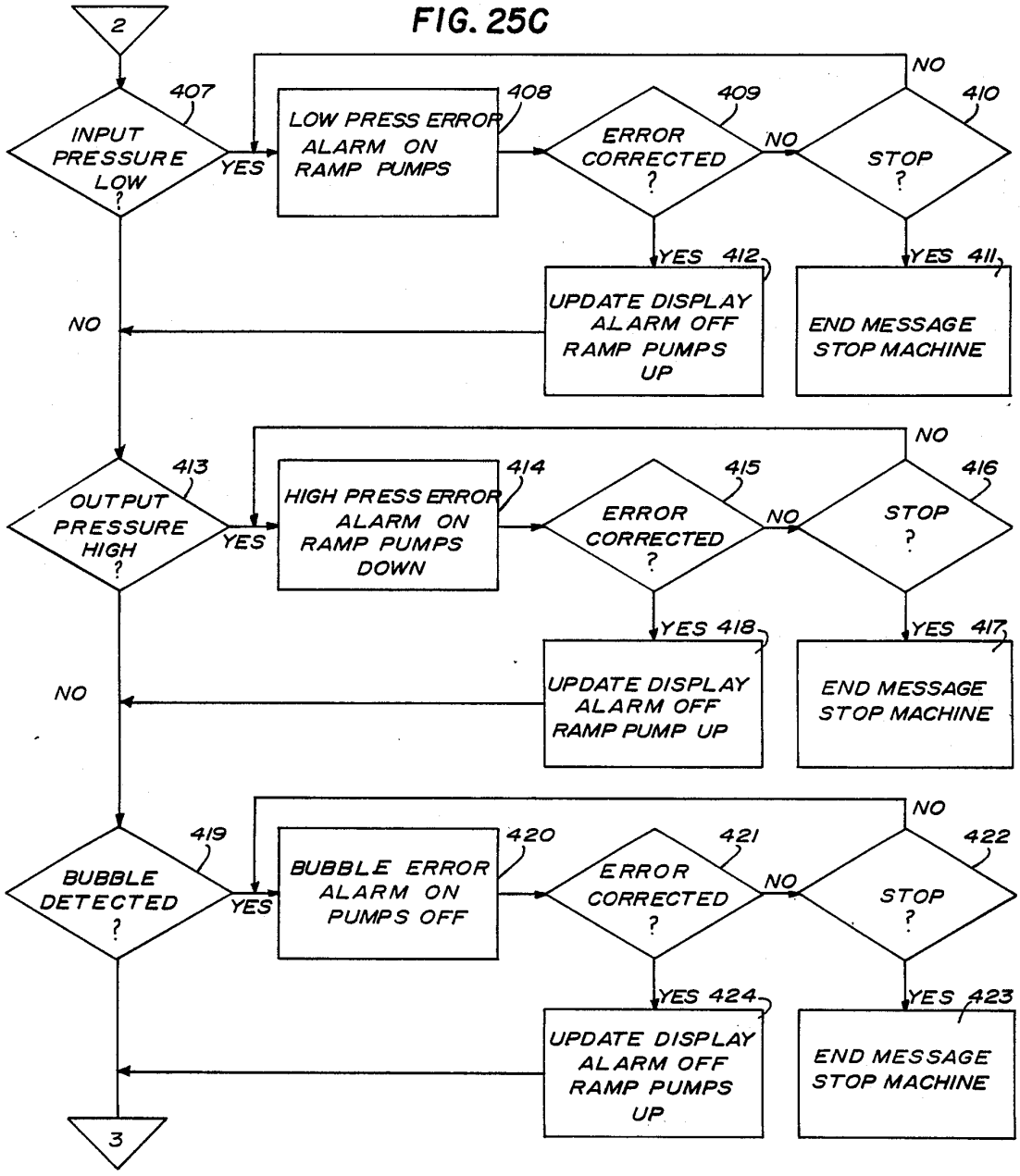
2
407
INPUT PRESSURE LOW ?
YES
NO
408
LOW PRESS ERROR ALARM ON RAMP PUMPS
409
ERROR CORRECTED ?
NO
410
STOP ?
YES 412
UPDATE DISPLAY ALARM OFF RAMP PUMPS UP
YES 411
END MESSAGE STOP MACHINE
413
OUTPUT PRESSURE HIGH ?
YES
NO
414
HIGH PRESS ERROR ALARM ON RAMP PUMPS DOWN
415
ERROR CORRECTED ?
NO
416
STOP ?
YES 418
UPDATE DISPLAY ALARM OFF RAMP PUMP UP
YES 417
END MESSAGE STOP MACHINE
419
BUBBLE DETECTED ?
YES
NO
420
BUBBLE ERROR ALARM ON PUMPS OFF
421
ERROR CORRECTED ?
NO
422
STOP ?
YES 424
UPDATE DISPLAY ALARM OFF RAMP PUMPS UP
YES 423
END MESSAGE STOP MACHINE
3

FIG. 25D

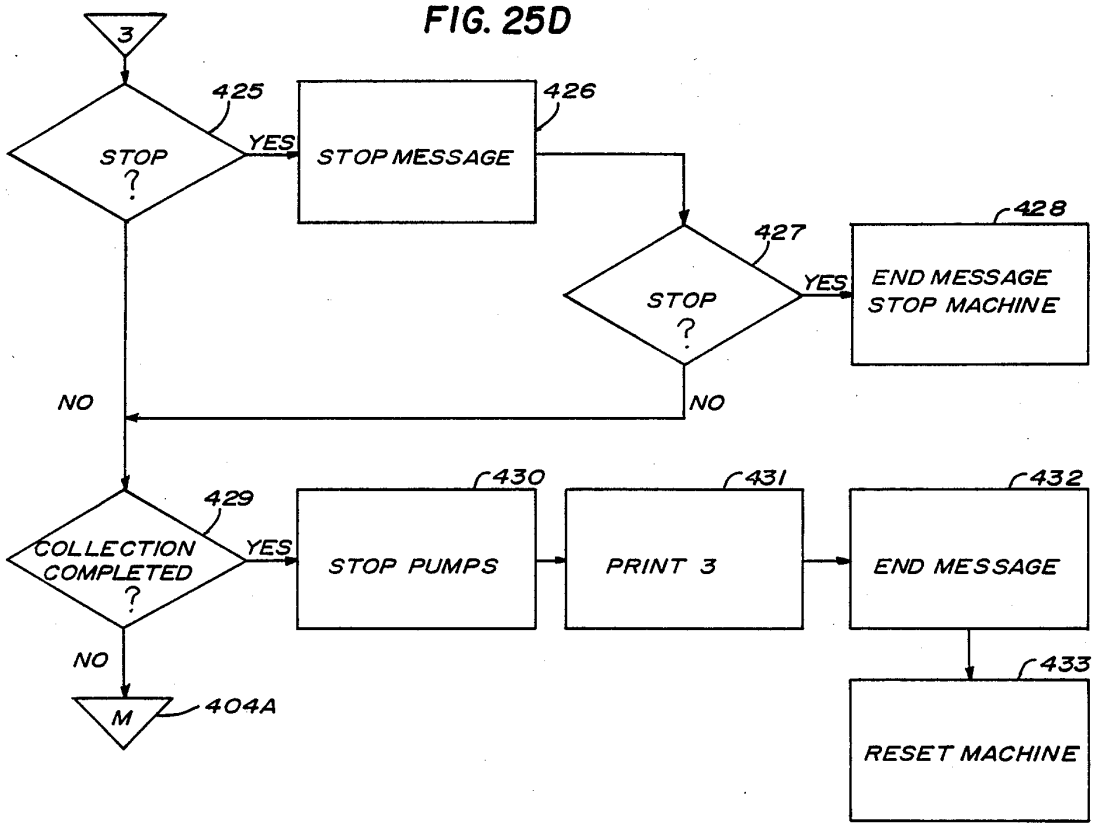
3
425
STOP ?
YES
STOP MESSAGE
426
427
STOP ?
YES
428
END MESSAGE
STOP MACHINE
NO
NO
429
COLLECTION COMPLETED ?
YES
430
STOP PUMPS
431
PRINT 3
432
END MESSAGE
NO
M
404A
433
RESET MACHINE

SYSTEM AND METHOD FOR CONTINUOUSLY FRACTIONATING BLOOD IN SITU

CROSS REFERENCE TO RELATED APPLICATION

This is a continuation-in-part of copending application Ser. No. 523,007, filed Aug. 15, 1983.

BACKGROUND OF THE INVENTION

The present invention relates to the collection of blood, and in particular, to the fractionating of blood to collect blood substances, such as plasma, cells, or some specific constituent of blood. There are many reasons for fractionating blood to separate various components thereof, one of the most important being to obtain plasma. Plasma has been found to be efficacious in the treatment of various disease states and is generally useful since it may be stored for long periods in comparison to whole blood which has a rather short shelf life.

When harvesting plasma from a donor, it is preferred to return the formed elements of the blood, including red blood cells, white blood cells and platelets, to the donor so that frequent plasma harvestings may be effected. Traditionally, plasma is harvested by transferring blood from a donor into a blood bag containing a fixed amount of anticoagulant solution and thereafter centrifuging the blood to separate the plasma from the formed elements of the blood. The formed elements are thereafter reconstituted with a saline solution and reintroduced to the donor. For a variety of reasons, generally each donor must undergo two such operations for each plasma donation.

The traditional manner of harvesting plasma involves several risks and discomforts to the donor. A principal risk is the chance that the reconstituted blood returned to the donor will not be the donor's, a situation which may result in fatalities. Other attendant risks are those of infection and the like. The discomfort involves, among other things, the inordinate length of time required to permit two samples of blood to be taken with the required centrifuging of each sample, the large volume of blood removed for processing, the reconstituting of the formed elements into a saline solution and reintroducing same to the donor. It is clear that a simpler, safer, speedier system for harvesting plasma is needed and has been needed for a considerable length of time.

One such proposed alternative to the above-described traditional method of harvesting plasma is described in the Blatt et al. U.S. Pat. No. 3,705,100 issued Dec. 5, 1972, which patent discloses an apparatus and method for harvesting plasma from whole blood which includes a cylinder having a reservoir and on the bottom of the cylinder a spiral flow path formed by a spiral groove which sits on top of a membrane having a predetermined pore size. Blood in the reservoir is forced through the spiral path by means of a pressurized gas driving fluid. A second embodiment of the apparatus is disclosed in which a hypodermic syringe is used to withdraw blood from a patient and thereafter introduce the blood into the same sort of spiral flow path as previously described.

The Blatt et al. apparatus and process is not utilized for the commercial production of plasma. The Blatt et al. process and method is, like the described prior art, a batch process and requires withdrawing blood from a donor, treating it and thereafter reintroducing the blood into the donor with all the attendant risks and time

delays previously described. Accordingly, none of the serious drawbacks of the prior art have been solved by the Blatt et al. disclosure.

Another disadvantage of existing plasma harvesting techniques is that neither the amount of plasma collected nor the amount of anticoagulant added thereto is tailored to the individual donor. It is known that the total circulating plasma volume and plasma concentration in a human donor vary as a functions of body weight and hematocrit (red blood cell concentration). In general, the plasma volume varies directly with body weight. For example, plasma volume averages approximately 0.05 liters per kilogram of body weight or about 22.7 ml. per pound of body weight. Thus, plasma volume in a 150 lb. man is approximately 3.4 liters. Plasma concentration varies inversely with hematocrit. Thus, e.g., in a one liter donation with a hematocrit of 45%, the plasma concentration will be 55% or 550 ml.

Body weight of most donors may vary from 110 to 300 lbs., and it has been found that hematocrit varies from about 38% to about 54%. It would be impractical and prohibitively expensive to have different size blood bags and different amounts of anticoagulant to accommodate all the possible variations of body weight and hematocrit values in donors. Consequently, current government guidelines specify two classes of donors, viz., those having a body weight of 174 lbs. or less and those having a body weight over 174 lbs. Current regulations also specify a maximum volume of blood, not plasma, which can be extracted per donor episode. The maximum blood volume is 1 liter per session in a donor of 174 lbs. or less and 1200 ml. per session in a donor of greater than 174 lbs. Since hematocrit varies from 38% to 54%, plasma harvested will vary from 460 to 620 mls. in a 1 liter donation. Therefore, it can be seen that, under current government guidelines, the volume of plasma harvested in a single donor episode as a percent of the total circulating plasma in the donor can vary over a fairly wide range.

Taking the example of a 150 lb. man, having about 3.4 liters of circulating plasma, a one liter whole blood donation may represent anywhere from 13.5% to 18.2% of the donor's initial circulating plasma, depending upon the donor's hematocrit value. It is generally accepted that the maximum percentage of total circulating plasma which safely can be donated in a single episode is 18%. Data collected from actual plasmapheresis at a number of donor centers indicate that the percent of total circulating plasma volume removed ranged from 10% to 22.8% and the percent of total circulating blood volume removed ranged from 4.7% to 14.1%, with small donors giving disproportionately larger amounts of plasma than large donors. Therefore, it is apparent that under current procedures, the plasma harvested from many large donors is considerably less than the maximum safe amount, and that harvested from many small donors is in excess of the maximum safe amount.

Additionally, under current government regulations, one unit of anticoagulant is added to every ten units of collected whole blood. Typically, the anticoagulant is added to the blood bag before collection of the blood. Thus, for example, a blood bag for collecting 500 mls. of whole blood from a person 174 lbs. or less would contain 50 ml. of anticoagulant, while a blood bag for collecting 600 ml. of whole blood from a donor over 174 lbs. would contain 60 ml. of anticoagulant.

But blood coagulation factors are present only in plasma. Because the plasma volume of whole blood varies with hematocrit, basing anticoagulant volume on the whole blood volume is, of necessity, inaccurate. Blood from donors with low hematocrits may receive too little anticoagulant and blood from donors with high hematocrits may receive too much. When the amount is too little, blood may clot. When it is too much, systemic toxicity secondary to calcium depletion may occur.

SUMMARY OF THE INVENTION

It is a general object of the present invention to provide an apparatus and method for separating a blood substance from a source of blood which avoids the disadvantages of prior methods and apparatuses while affording additional structural and operating advantages.

An important feature of the invention is the provision of a method of collecting blood or blood products as a function of some physiologic constant.

Another feature of the invention is the provision of a method of separating a blood substance from a source of blood based on the initial amount of the substance in the blood source.

Still another important feature of the invention is the provision of a method for accurately, safely and economically collecting plasma from a source of blood.

In connection with the foregoing feature, it is another feature of the invention to provide a method for harvesting blood plasma from a human donor as a function of circulating plasma volume in the donor.

It is another feature of the invention to provide a method for accurately harvesting the maximum safe amount of plasma from a donor.

Still another feature of the invention is the provision of a method for dilution of a blood substance as a function of the amount of the substance in the blood source.

In connection with the foregoing feature, yet another feature of the invention is the provision of a method of adding anticoagulant to a source of blood as a function of plasma concentration in the blood.

In connection with the foregoing features, another feature of the invention is the provision of a system for performing these methods.

Another feature of the invention is the provision of methods and systems of the type set forth in which the blood substance is separated and diluent is added thereto continuously and automatically.

Certain of these features are attained by providing a method of separating a blood substance from a source of blood, comprising: ascertaining the initial amount of the substance in the blood source, and separating the substance from the blood source until a predetermined percentage of the initial amount of the substance has been separated.

Other features are attained by providing a method of diluting a blood substance in a source of blood, comprising: ascertaining the initial amount of the substance in the blood source, and adding a diluent to the blood in an amount equal to a predetermined percentage of the initial amount of the substance in the blood source.

Still other features of the invention are attained by providing a system for collecting plasma from a source of blood, comprising means for ascertaining the volume of plasma in the source of blood, and means for separating a predetermined portion of the plasma from the source of blood.

The invention consists of certain novel features and a combination of parts hereinafter fully described, illustrated in the accompanying drawings, and particularly pointed out in the appended claims, it being understood that various changes in the details may be made without departing from the spirit, or sacrificing any of the advantages of the present invention.

BRIEF DESCRIPTION OF THE DRAWINGS

For the purpose of facilitating an understanding of the invention, there is illustrated in the accompanying drawings a preferred embodiment thereof, from an inspection of which, when considered in connection with the following description, the invention, its construction and operation, and many of its advantages should be readily understood and appreciated.

FIG. **1** is a diagrammatic view of the system of the present invention showing the in situ fractionation of blood;

FIG. **2** is an enlarged top plan view of the blood fractionating device illustrated in FIG. **1**;

FIG. **3** is a side elevational view of the device illustrated in FIG. **2**;

FIG. **4** is an exploded perspective view of the blood fractionating device illustrated in FIG. **1**;

FIG. **5** is an enlarged plan view of an internal blood fraction collection plate;

FIG. **6** is an enlarged plan view of a blood plate;

FIG. **7** is a view in section of the collection plate illustrated in FIG. **5** as seen along line **7—7** thereof;

FIG. **8** is a view in section of the collection plate illustrated in FIG. **5** as seen along line **8—8** thereof;

FIG. **9** is a view in section of the collection plate illustrated in FIG. **5** as seen along line **9—9** thereof;

FIG. **10** is an enlarged view of a portion of the collection plate illustrated in FIG. **9**;

FIG. **11** is a view in section of the blood plate illustrated in FIG. **6** as seen along line **11—11** thereof;

FIG. **12** is a view in section of the blood plate illustrated in FIG. **6** as seen along line **12—12** thereof;

FIG. **13** is a view in section of the blood plate illustrated in FIG. **6** as seen along line **13—13** thereof;

FIG. **14** is a view in section of the blood plate illustrated in FIG. **6** as seen along line **14—14** thereof;

FIG. **15** is a view in section of the blood fractionating device illustrated in FIG. **2** as seen along line **15—15** thereof;

FIG. **16** is a view in section of the blood fractionating device illustrated in FIG. **2** as seen along line **16—16** thereof;

FIG. **17** is an end elevational view of the outlet manifold of the blood fractionating device illustrated in FIG. **2**;

FIG. **18** is a view in section of the blood fractionating device illustrated in FIG. **2** as seen along line **18—18** thereof;

FIG. **19** is an end elevational view of the inlet manifold of the blood fractionating device illustrated in FIG. **2**;

FIG. **20** is a diagrammatic view of an automatic system in accordance with the present invention for performing the method of the present invention wherein the method is customized for individual donors;

FIG. **21** is a front elevational view of the console unit of the system of FIG. **20**;

FIG. **22** is a top plan view of the lower housing of the console unit of FIG. **2**, with disposable parts in place;

FIG. 23 is a plan view of the disposable parts of the system of FIG. 20;

FIG. 24 is an enlarged fragmentary view in vertical section, taken generally along the line 24—24 in FIG. 22, with plasma bags in place; and

FIGS. 25A–25C are a flow diagram of the computer program for the system of FIG. 20.

DESCRIPTION OF THE PREFERRED EMBODIMENT

Referring now to FIG. 1 there is illustrated a blood fractionating system 20 which includes a blood fractionator 25 connected in a closed loop to a donor 30. The blood fractionator 25 has an inlet 26 and an outlet 36, the inlet 26 being connected to the donor 30 by a blood tube 27 connected to a catheter, needle or double lumen needle 28 inserted into an appropriate vein or artery of the donor 30. A peristaltic pump 31 having a roller 32 in contact with the blood tube 27 is positioned between the donor 30 and the inlet 26 of the blood fractionator 25 to pump blood from the donor through the tube 27 into the fractionator in the direction of the arrow 33. A supply of anti-coagulant 35 is connected to the tube 27 and the flow rate of the anti-coagulant is modified by a second pump 31A having a roller 32A to provide a predetermined flow rate, as hereinafter explained, of anti-coagulant with the blood flowing from the donor 30 to the fractionator 25. The outlet 36 of the fractionator 25 is provided with a tube 37 which conducts blood in the direction of the arrow 38 to the catheter, needle or double lumen needle 28, thereby to provide the closed loop for the system 20 of the present invention. A blood fraction collection receptacle or bag 40 is provided with a fitting 41 which is connected by a tube 42 to the outlet 36 and more particularly the outlet port 202, see FIG. 18 of the blood fractionator 25 thereby to permit a blood fraction to flow from the outlet 36 in the direction of the arrow 43 to the blood fraction collection bag or receptacle. The pumps 31 and 31A may be of the type disclosed in copending application Ser. No. 672,571, filed Nov. 16, 1984, and entitled "Roller Pump".

Although the blood fractionator 25 of the present invention along with the system 20 disclosed herein may be useful to produce a variety of blood fractions, plasma is one of the most important blood fractions needed in the medical community and, therefore, the blood fractionator 25, as well as the system 20 and method of collecting a blood fraction, will hereinafter be described with respect to blood plasma only, it being understood that other blood fractions may be collected with minor modifications to the device 25 and system 20, as will be apparent to those skilled in the art.

In a preferred embodiment of the present invention, the system 20, with the exception of the pumps 31 and 31A and the anticoagulant bottle 35, may be preassembled as a unit, and may be disposable as a unit after use in the blood fractionation operation. Such a unit may include a suitable spike (not shown) for insertion into the anticoagulant bottle 35. After the blood fraction has been collected in the bag 40, the tube 42 may simply be clamped and severed, so that the filled bag 40 may be retained and the remainder of the unit may be disposed of.

Referring now to FIGS. 2, 3 and 4, it will be appreciated that the blood fractionator 25 is made up of a stack 45 of plates, there being provided two external plasma plates 50 two internal blood plates 55 and an interior or internal plasma plate 60, an appropriate inlet manifold 65 and outlet manifold 70 with each of the plasma plates and blood plates being separated by an appropriate membrane 75. As illustrated, the blood fractionator 25 is comprised of a stack 45 of five separate plates and four membranes 75 interleaved between the plates such that each plasma plate 50, 60 faces a blood plate 55 and is separated therefrom by an appropriate membrane 75. It will be appreciated that the stack 45 could as easily be comprised of a stack of plates in which the external plates are blood plates having two double sided plasma plates separated by an internal double sided blood plate. The number of plates also could be increased.

Referirng now to the external plasma plates 50, it will be appreciated that although the plates are not identical, they are mirror images of one another for the sake of brevity like numbers have been placed on like portions of each end plate 50. As seen in FIG. 4 each external plasma plate 50 is an oval member 80 with an outer flat surface 81 opposed by an inner flat surface 82. The plate 50 is generally oval in shape and has a large inlet end 83 and a small outlet end 84. There are opposed recesses 85 in the side edges of the oval member 80 to provide for easy handling and a large notch 86 in the small outlet end 84 having an end surface 86*a* and a small notch 87 in the large inlet end 83 having a flat end surface 87*a*.

Each of the end plasma plates 50 has on the inside flat surface 82 thereof a plasma collection channel 90 which has a trapezoidal portion 91 defined by side edges 92 and end edges 93. Toward the small outlet end 84 of the end plasma plate 50 is a transversely extending slot 94 in fluid communication with a plurality of longitudinally extending shallow collection grooves 95 separated by ridges 96. As hereinafter explained, the slot 94 is substantially deeper than the shallow collection grooves 95 and the portion of the grooves 95 adjacent the slot 94 are deeper than the remainder of the grooves 95 but shallower than the slot. A plasma outlet 98 in the form of an aperture extending from the end surface 86*a* extends through the oval member 80 and is in fluid communication with the slot 94. Finally, an oval tongue 99 surrounds the plasma collection channel 90, for a purpose hereinafter explained.

Referring now to FIGS. 6 and 11 through 14, there is illustrated a blood plate 55 which is provided with the same configuration on both sides thereof, whereby only one side will be described for the sake of brevity. Each of the blood plates 55 is identical in configuration and has in the opposed flat surfaces 102 thereof a blood flow channel 100, the plate 55 being generally oval in shape and identical in size to the external plasma plates 50 previously described. For that matter, all of the plates 50, 55 and 60 have the same general dimensions in plan view. The blood plate 55 has an edge surface 101 and opposed flat side surfaces 102, it being the surfaces 102 in which the blood flow channels 100 are positioned. The blood plate 55 has a large inlet end 103 and a small outlet end 104, with recesses 105 being provided in the side edges as previously discussed with respect to the end plasma plates 50. As in the end plasma plates 50, there is a large notch 106 in the small outlet end 103, the notch having a end surface 106*a* and there is a small notch 107 at the large inlet end 103, the small notch 107 being provided with an end surface 107*a*. A groove 109 extends around the periphery of both flat side surfaces 102 and each is complementary in shape to the tongue 99 in the adjacent end plasma plate 50 and are shaped and dimensioned to receive therein the associated tongue 99 as well as the thickness of the membrane 75,

as will be explained. Although shown with grooves on blood plate **55** and tongues on plates **50**, the tongues and grooves can be interchaned.

Each of the blood flow channels **100** has a distribution portion **110** and a collection portion **110***a* in the form of a multiple bifurcated manifolds, these distribution and collection portions ae identical in shape but not in dimension, as will be explained, but for the case of brevity again, like numerals have been applied to like portions of the manifolds **110**, **110***a*. Both the distribution portion **110** and the collection portion **110***a*, that is the bifurcated manifolds are in fluid communication with a transfer portion **160**, all for a purpose hereinafter explained.

Referring now to the large inlet end **103** of the blood plate **55**, there is an inlet aperture **112** extending through the end surfce **107***a* of the notch **107** and extending longitudinaly of the blood plate **55**. The inlet **112** has a counterbore portion **113** at one end thereof and communicates with an aperture **114** which extends through the plate **55**, as best seen in FIGS. **6** and **11**, so as to provide communication between the inlet manifold **65** and the blood flow channel **100** on both sides of the plate **55**. As notices, the inside facing surface **114***a* of the aperture **114** is rounded at the juncture with the bifurcated manifold **110** to prevent contact of the blood flowing therethrough with a sharp edge for a purpose, as will hereinafter be set forth.

The manifolds **110** and **110***a* on each end of the blood plate **55** are multiple bifurcated manifolds in which each path is divided twice and there are five such divisions resulting in a single blood stream entering through inlet **112** being divided into **32** blood streams, as hereinafter set forth, at the delivery end of the manifold **110**. Specifically, blood flowing through the aperture **114** enters the blood flow channel **100** at the main channel **115** and there is split at the first bifurcation into two channels **116** with the surfaces **117** being rounded or arcuate so as to prevent the impingment of the blood into corners which results in stagnation and less smooth distribution and flow. Each of the channels **116** curves as at **118** into a secondary channel **119** which is again bifurcated into channels **121**, both the arcuate portions **122** and **123** being formed to prevent stagnation and increase smooth flow of blood through the manifold **110**. From the channels **121** the blood into the tertiary channel **129** where it is again bifurcated into channels **131** and channels **131** are again provided with arcuate surfaces **132** and **133** for the same purposes as previously described. The blood flows from channels **131** into the fourth tier of channels **149** where they are again bifurcated into channels **141**, the channels **141** being provided with smooth arcuate surfaces **142** and **143** to prevent stagnation of blood as it flows through the distribution portion of the blood flow channel **100**. A fifth tier channel **149** receives the blood from the channels **141** and is bifurcated as at **151** into two additional streams, thereby making the five bifurcations previously described with each of the channels **151** having rounded or arcuate smooth surfaces **152** and **153** to prevent any stagnation of blood and to enhance the flow characteristics thereof. Each of the bifurcated channels **151** has an entrance **155** to the transfer portion **160** of the blood flow channel **100**. As before indicated there are **32** entrances **155** to the transfer portion **160**.

As best seen in FIG. **11**, the bifurcated manifolds **110**, **110***a* have a continuously changing depth with the manifolds being deeper at the inlet **112** or outlet **112***a* and being shallower at the junctures with the transfer portion **160** of the blood flow channel **100**. It is preferred that this graduation in depth be uniform so that the depth of the manifolds **110**, **110***a* will be the same along a plane transverse to the longitudinally established flow path through the plate **55**. Preferably, the varying depth of the manifolds **110**, **110***a* is such that the depth of the manifolds at the juncture with the transfer portion **160** is exactly the same as the depth of the transfer portion.

The transfer portion **160** is generally trapezoidal in plan view and is defined by side edges **161** and end edges **162** with a generally flat uniformly deep surface **163** which is shallow and as hereinbefore set forth of the same depth as the entrances **155** from both the collection and distribution portions of manifolds **110**, **110***a*. Because the transfer portion **160** of the blood flow channel **100** is trapezoidal in shape, that is it tapers from the inlet end **103** to the outlet end **104** of the plate **55**, the transverse dimensions of the collection manifold **110***a* is less than the transverse dimension of the distribution manifold **110**. However, the configuration of the collection manifold **110***a* is precisely the same as the configuration of the distribution manifold **110**; therefore, like numerals have been placed on like portions to prevent repetitive description. Suffice it to say that the entrances **155** of the collection manifold **110***a* at the end of the transfer portion **160** are identical in configuration and number but smaller in overall transverse dimension than the entrances **155** from the manifold **110**. The same five bifurcations are in the manifold **110***a* as in the manifold **110** and the vertically extending aperture **114** with the same arcuate surface **114***a* connects the outlet **112***a* to the collection manifold **110***a*, the outlet **112***a* being provided in the end edge **106***a* of the notch **106** and having a counterbore portion **113***a* of the same size and dimension as the counterbore **113** at the inlet end **103**.

Similarly, the collection manifold **110***a* has a varying depth in the same manner as the distribution manifold **110**, that is the depth of the entrances **155** is the same as the depth of the transfer portion **160** and the depth of the manifold increases uniformly from the entrances **155** toward the aperture **114**. Again, the increase in depth is preferably uniform so that the depth of the manifold **110***a* would be exactly the same along a plane transverse to the longitudinally established blood flow path of the blood plate **155**.

Accordingly, it is seen that the blood plate **55** has provided blood flow channels **100** on both sides thereof and each blood flow channel **100** is identical and has a distribution portion in the form of a multiple bifurcated manifold **110**, a transfer portion **160** and a collection portion in the form of a multiple bifurcated manifold **110***a*. The blood flow is established longitudinally of the plate and flows from the inlet **112** through the end surface **107***a* of the notch **107** and exits through the outlet **112***a* through the end surface **106***a* of the notch **106** which is opposite to the notch **107**.

The multiple bifurcations of the manifolds **110** and **110***a* are most easily seen in reference to FIGS. **12** and **14**. FIG. **12** is taken along a portion of the manifold **110** where there are four channels **129** and FIG. **14** is taken along the entrances **155** of the manifold **110** wherein there are thirty-two channels. As seen therefore, the blood flow has been bifurcated five times so that from a single blood stream at the inlet **112** it is divided twice five times, there being two channels **116**, four channels **121**, eight channels **131**, sixteen channels **141** and thirty-two channels **151** which terminate in the entrances **155**.

These five bifurcations repeated on the collection manifold **110***a* to combine, in a uniform manner, the thirty-two streams entering the collection manifold **110***a* from the transfer portion **160** to a single outlet stream in the outlet **112***a*. FIG. **13** clearly illustrated the two transfer portions **160** of the blood flow channel **100** which consist of a shallow trapezoidal shaped groove, the trapezoidal shape being for a purpose hereinafter set forth.

Referring now to FIGS. **5**, **7–10**, there is shown the internal plasma plate **60** having the same configuration on both sides of the plate and more particularly the plate **60** has opposed flat surfaces **171** and a peripheral edge surface **172**. There is a large end **173** which corresponds to the inlet **26** and a small end **174** which corresponds to the outlet **36**. In the side of the edge surfaces **172** are two finger recesses **175** of the same size and dimension as the previously described recesses **85** and **105**. At the outlet end **36** corresponding to the small end **174** is a large notch **176** of the same size and configuration as the previously described notches **86** and **106** respectively in the end plasma plates **50** and the blood plates **55**. The large notch **176** has an end surface **176***a*. Opposite the large notch **176** is a smaller notch **177** in the inlet **26** of the device **25** which corresponds to the small end **173** of the plate **60**. Notch **177** is of the same size and dimension as the previously described notches **87** and **107** and is provided with an end surface **177***a*. A tongue **179** extends around the periphery of each side surface **171** of the plate **60** and is constructed and arranged to fit within one of the notches **109** in the blood plates **55**.

A plasma collection channel **180** is in both side surfaces **171** of the plate **60** and is of the same size and dimension and is similarly constructed to the plasma collection channel **90** in the end plasma plates **50**. Specifically, the plasma collection channel **180** includes a slot **181** which extends entirely through the plate **60** and opens onto both opposed substantially flat surfaces **171**. An aperture **182** forms the plasma outlet which extends through the surface **176***a* of the notch **176** and has a counterbore area **183** for receiving a suitable fixture from the tubing **42** which leads to the plasma collection receptable or bag **40**. It is noted that in plan view, the plasma outlet **182** is in vertical alignment with the plasma outlets **98** of the end plasma plates **50**; however, in FIG. **5** the plasma plate **60** is reversed so that while it appears the plasma outlet **182** is displaced, it is seen, particularly from FIG. **4**, that the plasma outlet **182** is aligned with each of the other plasma outlets **98** of the end plasma plates **50**, for a purpose hereinafter described.

The plasma collection channel **180** further includes a trapezoidally shaped collection area **185** defined by side edges **186** and end edges **187**, the trapezoidal plasma collection area being substantially the same size and dimension as the transfer portion **160** of the blood plates **55** and the same as the trapezoidal plasma collection portion or area **91** of the end plasma plates **50**. As with the end plasma plates **50**, there are a plurality of longitudinally extending shallow collection grooves **195** separated by ridges **196**. Immediately adjacent the transversely extending slot **181** is a portion **197** of the grooves **195** which is deeper than the remainder of the grooves **195** but of course shallower than the slot **181** which extends entirely through the plate **60**.

As seen, therefore, the blood fractionator **25** is comprised of a stack **45** of alternating blood plates **55** and plasma plates **50**, **60** interleaved by membranes **75**. The membrane **75** is selected so that the pore size of the membrane selectively passes the blood fraction to be collected. In the case of a plasma collection device, the membrane **75** preferably has a pore size in the range of rom about 0.1 microns to about 1.5 microns. Membranes are commercially available with pore sizes 0.6 microns, 0.65 microns and 1.0 microns. Others may be available. Nuclepore, Gelman, Millipore and Sartorius produce membranes suitable for blood plasma harvesting. Other blood fractions which are of interest and which may be separated by the fractionator **25** are protein-free filtrates and protein fractions and membranes useful for these purposes would necessarily have pore sizes in the range of from about 50 Angstrom to about 0.05 microns. These membranes, also are readily available as will be appreciated by those skilled in the art.

The stack **45** is sealed in part and clearly aligned by the tongue and groove mechanism previously described. For instance, the end plasma plates **50** have the tongues **99** while the blood plates **55** are provided with the grooves **109** and the central plasma plate **60** has the tongues **179**, all of which are shaped, constructed and arranged to fit one within the other while accommodating therein membrane **175** which, as illustrated in FIGS. **15–18**, extends from edge to edge of the various plates. The usefulness of the tongue and groove construction is that the membranes **75** remain imperforate which is critical to the design of the blood fractionator **25** and to the operation of the system **20** since membrane rupture or leakage can result in serious problems. Furthermore, an imperforate membrane effectively constructs blood flow channels without the need for gaskets or other fluid separating components. In any event, utmost care is taken to ensure the leak free nature of the membranes **75** and to this end, the design of a device which provides an imperforate membrane **75** is a significant advantage.

Completing the blood fractionator **25** and coacting with the stack **45** are the blood inlet manifold **65** and the blood and plasma outlet manifold **70**. The function of the blood inlet manifold is extremely important and is to uniformly distribute the blood from the donor **30** which enters the blood fractionator **25** through the inlet **26** and particularly through the tube **27** among the blood plates **55**. In the preferred embodiment, there are two blood plates **55**, whereby the function of the blood inlet manifold **65** is to uniformly distribute the blood flow from the donor **30** evenly between the two blood plates **55** and specifically to the respective inlets **112** of each plate leading to the associated multiple bifurcated manifolds **110**. The blood inlet manifold **65** is received in the aligned series of notches **97**, **107** and **177** and, as best seen in FIG. **19**, the blood inlet manifold is comprises of a solid block, preferably of plastic **210**, having a blood inlet port **211**, a bifurcated passageway **213** and two fitting **214** of a size and dimension to fit snugly within the counterbore portion **113** of each blood plate **55**.

Referring now to the blood and plasma outlet manifold **70** illustrated particularly in FIGS. **4**, **15** and **17**, there is a block, preferably of plastic **200** which has a blood outlet port **201** connected to the tubing **37** so that blood flowing from the blood fractionator **25** in the direction of the arrow **38** returns to the donor **30**. The blood outlet port **201** is in fluid communication with a bifurcated passageway **203** which leads to two fittings **204** constructed and arranged to fit within the counterbore portions **113***a* of the two blood plates **55**. The block **200** like the block **210** is constructed and arranged

snugly to fit within the appropriate opening formed by the series of notches **86**, **106** and **176** of the stack **45** of plates. The outlet manifold **70** also has a plasma outlet port **202** connected to the tubing **42** which permits plasma to flow in the direction of the arrow **43** into the plasma collection receptacle or bag **40**.

The plasma outlet port **202** is connected to a trifurcated passageway **206** which has connected thereto two end fittings **207** and a center fitting **208** respectively fitting into the counterbore portions of the plasma end plate outlets **98** and the counterbore portion **183** of the interior plasma plate **60**. The fit of the inlet manifold **65** and the outlet manifold **70** is such as to provide a fluid tight fit between the manifold and the appropriate portions of each plate, thereby to ensure no leaks during operation. It will be appreciated that the plates are maintained in their stacked configuration by the two manifolds **65** and **70** which may fixedly secured to their respective series of notches by a suitable adhesive which is biocompatible with blood and blood components or by ultrasonic welding or other methods well known in the art.

In the plasma harvesting art, there has been a long felt need to provide an easier, safer, more economical method of harvesting plasma than that which is commercially available. There has been a significant amount of money both from the private sector and from the government dedicated to finding solutions to the problem, but as of yet there has been no satisfactory solution. Problems encountered in the art are many but the most significant problem is the rapid degradation in plasma production with time for any device heretofore discovered or proposed. It is not unusual to have initial plasma production that is significant and commercially acceptable however within a relatively short time, in the order of less than a half hour, plasma production falls off so dramatically that as of the present date no commercial device is available which meets the criteria heretofore set forth.

The present blood fractionator **25** and system **20** meet all the criteria set forth above and provides commercially acceptable plasma collection rates even after more than one half hour of continuous plasma production. When harvesting blood with a 5-plate embodiment, it is preferable that the blood flow rate from the donor **30** to the blood fractionator **25** be in the range of from about 50 milliliters per minute to about 100 milliliters per minute. Blood flow rates above 100 milliliters per minute do not significantly augment plasma flow unless additional plates are added, whereas flow rates less than about 50 milliliters per minute result in low plasma production. Clearly, blood hematocrit affects the amount of plasma produced with higher hematocrit values producing less plasma due to lower filtration rate.

In human donors it is usual to encounter hematocrit values in the range of from about 38 to about 55 percent. The taper of the plates in the stack **45** has been calculated on the basis on a average hematocrit value of about 45 percent and is also determined, to some extent, by the length of the blood flow path and particularly by the length of the trapezoidal area of the various plates. The taper is used to maintain constant the blood flow rate as plasma transfers through the membrane **75** thereby decreasing the volume of the blood. It is also important to maintain shear constant and the taper also accomplishes this purpose. In the blood fractionator **25** described, the calculated blood flow velocity which was maintained substantially constant due to the construction of the device was about 5.7 centimeters per second with a mean shear of 6027 sec^{-1}.

In addition to the tapered blood channel to maintain constant velocity and shear, it was also discovered that in order to obtain commercially acceptable plasma collection rates over a substantial period of time, it was beneficial to provide entry acceleration of the blood from the manifold to each plate and this, of course, is provided by the inlet manifold **65**. An additional important feature of the fractionator **25** is the progressive decrease in the bifurcated manifold channel depth from entry to exit, this referring to the bifurcated manifolds **110** in each of the blood plates **55**.

Still another important feature of the blood fractionator **25** is the shallow parallel grooves **195** in the plasma plate **60** and the similar grooves **95** in the end plates **50** which function to optimize transmembrane pressure and to minimize flow resistance to plasma during operation of the fractionator **25**. The optimization of the transmembrane pressure greatly reduces the rate at which red blood cells plug the pores of the membrane **75**.

Still another important feature of the system **20** and the fractionator **25** is the vertical inlet manifold **65** and outlet manifold **70** which, in cooperation with other design features of the fractionator, result in a uniform blood distribution intraplate and a uniform blood distribution along each blood flow channel **100**. Another aspect of the inlet manifold **65** and the outlet manifold **70** which coopertes with tongue and groove construction of the fractionator **25** is the elegant seal of the device **25** which simplifies the internal gasketing necessary to maintain a liquid tight seal for the fractionator **25**.

In a constructional example of the fractionator **25**, each of the plates **50**, **55** and **60** is 0.19 inches thick. The width at the section **12—12** is 3.0 inches, the width at section **13—13** is about 3.04 inches and the width at section **14—14** is about 2.85 inches. The overall length of the fractionator, absent the inlet **211** and the outlet **201** is about 4.89 inches and the overall width at its widest part is about 3.38 inches. The dimension of the blood transfer portion **160** of the blood transfer plate **145** is about 3.0 inches at its widest and about 2.2 inches and its narrowest, this representing a taper in the order of about 8°.

It should be understood that the taper is calculated on the basis that plasma transfer through the membrane **75** is uniform throughout the blood transfer portion **160** and on the length of the portion **160**. For longer devices, the taper is necessarily greater and tapers of up to about 10° are contemplated. The length of the blood transfer area **160** is about 2.6 inches.

The passageway **114** which connects the inlets **112** with the multiple bifurcated manifold **10** has a diameter of about 0.125" and the entrances **155** are each about 0.031" wide and are spaced about 0.093", center to center at the large end and 0.069" center to center at the small end.

Referring now to the plasma plates and particularly to FIGS. **9** and **10** the depth of the longitudinally extending shallow grooves **195**, and for that matter the grooves **95**, are preferably about 3 mils. Each of the grooves **95**, **195** as best seen in FIG. **10**, are described by an arc 62 mils in radius and each of the ridges **96**, **196** are about 46 mils center to center. The depth of the portions **197** of the grooves **195** and the portions of the grooves

95 unnumbered immediately adjacent the respective slots, **94, 181,** have a depth of about 0.052". This portion of the grooves is important because it decreases flow resistance as the plasma or blood fraction flows into the slots. Preferably, for grooves **95, 195,** 3 mils deep, the portion **197** would be in the range of from about 0.04" to about 0.07". Less than about 0.04" would not accomplish the required reduction in blood fraction or plasma flow resistance while greater than about 0.07" would enhance clogging by red cells.

Another feature of the blood fractionator **25** is the continuously decreasing depth of the multiple bifurcated manifolds **110, 110***a* from the inlet **112,** outlet **112***a* to the blood transfer area **160.** This is important because blood exits the multiple bifurcated manifold **110** and particularly the entrances **155** with a slight inclination toward the surface of the adjacent membrane **75** which seems to be an advantage to the present design. Because relatively high shear is important to prevent the membrane **75** from clogging with red blood cells, the blood flow channel was kept shallow. As channel height was increased, filtration rate decreased.

Summarizing, there are a number of factors which apparently cooperate to enable a commercial device to be made which operates satisfactorily and which meets all the objects of the present invention. Of the most important features of the present invention are the uniform intraplate distribution of blood by the inlet manifold **65,** the uniform transverse distribution of blood across the plates by the multiple bifurcated manifolds **110,** the uniform flow velocity and shear accomplished by means of the tapered transfer areas **160,** the shallow blood flow path accomplished by the depth of the transfer areas **160** and the immediately adjacent membrane **75,** the optimization of transmembrane pressure by the shallow grooves **95, 195** of the plasma plates **50, 60,** the reduction in the flow resistance of the plasma due to the increased depth of the grooves **195** at the portions **197** and the like portions on the end plasma plates **50,** the uniform collection of the plasma by the outlet manifold **70,** and the uniform condensation of the multiple streams into a single outlet stream by the multiple bifurcated manifold **110** at the outlet end **36** of the fractionator **25** and the use of a design which obviates the necessity for internal gaskets or perforations of the membrane.

Reported hereafter in Tables I, II and III are data obtained with in vitro experiments with human blood. Because of the nature of stored human blood, the hematocrit value was adjusted to 33 percent with saline. In Table I and III, a single membrane device was used and hence the blood flow rate was 20 milliliters per minute whereas Table II reports a five layer, four channel device wherein the total blood flow rate was 80 milliliters per minute. Several different design modifications are shown. Accordingly, in order to extrapolate the initial and final filtrate rates reported in Tables I and III, these values must be multiplied by four.

TABLES I, II AND III

TABLE I

B00191/P00181 Results
All experiments in vitro with human blood, hematocrit adjusted to 33 per cent with saline.
Pump speed = 20 ml/minute

Number Experiments	Membrane	Inlet Pressure mm Hg	Outlet Pressure mm Hg	Initial Filtrate ml/min	Final Filtrate ml/min
7	Nuclepore 0.6 u	244	25	6.2	4.3
6	Nuclepore 1.0 u	275	—	7.5	6.8
4	Gelman 0.65 u	404	—	8.2	6.8

TABLE II

B00191/P00181 Results
All experiments in vitro per Table I.
Pump speed = 80 ml/min.
Five layers with 4 blood channels in parallel.

Number Experiments	Membrane	Inlet Pressure mm Hg	Outlet Pressure mm Hg	Initial Filtrate ml/min	Final Filtrate ml/min
8	Nuclepore 0.6 u	215	—	26.1	12.9
1	Nuclepore 1.0 u	96	—	20.5	15.5
12	Gelman 0.65 u	239	—	25.0	20.9

TABLE III

B00198/P00188 Results
All experiments in vitro per Table I.
Pump speed = 20 ml/min. Single layer.

Experiments	Membrane	Inlet Pressure mm Hg	Outlet Pressure mm Hg	Initial Filtrate ml/min	Final Filtrate ml/min
6	Nuclepore 0.6 u	154	—	4.6	3.1
2	Nuclepore 1.0 u	189	—	7.3	6.5
4	Gelman 0.65 u	190	—	4.4	2.1

Table IV reports the results of various dog experiments, it being noted that fresh blood produced a significantly higher final plasma flow rate than did the stored blood used in the experiments reported in Tables I–III.

TABLE IV

Dog experiments with B00191/P00181
Blood pumped from femoral artery and returned to femoral vein.
Citrate pumped into entry blood line prior to entry into device.

Blood Channel Height-In.	Membrane	Dog	Blood Flow ml/min	Citrate Flow ml/min	Total Flow ml/min	Average Plasma Flow ml/min	Initial Plasma Flow	Final Plasma Flow
.003	Nuclepore 0.6 u	1	58	22	80	21.3	22.5	18.0
.003	Nuclepore 0.6 u	1	58	22	80	19.3	20.5	17.0
.003	Nuclepore 0.6 u	1	58	22	80	17.9	18.5	17.5
.003	Nuclepore 0.6 u	2	58	22	80	22.6	24.0	22.0
.0045	Gelman	2	58	22	80	16.9	17.5	17.0
.003	Gelman	2	58	22	80	30.8	35.0	28.0
.003	Gelman	3	70	10	80	21.6	25.5	17.0
.003	Gelman	3	70	10	80	21.1	24.5	19.0
.0045	Gelman	3	70	10	80	11.1	11.5	10.5
.003	Gelman	3	58	22	80	25.3	28.0	24.0

TABLE IV-continued

Dog experiments with B00191/P00181 Blood pumped from femoral artery and returned to femoral vein. Citrate pumped into entry blood line prior to entry into device.								
Blood Channel Height-In.	Membrane	Dog	Blood Flow ml/min	Citrate Flow ml/min	Total Flow ml/min	Average Plasma Flow ml/min	Initial Plasma Flow	Final Plasma Flow
.003	Nuclepore .65 u	3	58	22	80	21.9	25.0	20.5

Table IV also illustrates certain results with blood flow channels having depths of 3 mils and 4.5 mils, but as seen from the data significant differences were not seen. For a single membrane device of the type reported in Tables I–III, typical manifold entrance velocities at **114** were 4.2 centimeters per second and typical manifold exit velocities at **155** were 17.4 centimeters per second. The blood flow channel velocity was, as previously reported, 5.7 centimeters per second and the blood channel mean shear was 6,027 sec^{-1}. The manifold **110** flow channels, at the inlet were approximately 125 mils deep with the depth decreasing progressively, and uniformly, to 3 mils at the juncture between the ends of the manifolds **110** and the beginnings of the blood transfer area **160** on the one hand and the entrance to the manifold and the end of the blood transfer area on the other hand.

In the blood fractionator **25** as illustrated, there are five plates with four blood-fraction plate pairs separated by four sheets of membrane. It is clear that larger or smaller stacks may be used without departing from the scope of the invention.

As illustrated, the system **20** is useful to provide a method of continuously fractionating blood in situ, that is continuously fractionating blood utilizing a closed loop system with a donor **30**. The closed loop consists of the tubes **27** and **37** in combination with the double lumen needle, needles or catheter **28** and the blood fractionator **25** enabling a method to be used in which blood is continuously pumped via the pump **31** from the donor **30** in a closed loop through the blood fractionator **25** and returned to the donor. The blood fraction is continuously produced during the operation of the method and is collected in the receptacle or blood fraction bag **40**. The method optimizes transmembrane pressure resulting in continued satisfactory blood fraction collection rates for prolonged durations. The method also includes the use of an anti-coagulant **35** which may be citrated saline or heparinized saline, or other well known anti-coagulants. The flow rate of the anti-coagulant and the blood are fixed by the pumps **31** and **31A** used in conjunction with the supply **35** of anti-coagulant. A flow rate of 65 milliliters of blood per minute and 15 milliliters of anti-coagulant per minute for a total inlet flow rate to the fractionator **25** of about 80 milliliters per minute has been satisfactory.

By the design of the fractionator **25**, the blood velocity is maintained constant through the transfer area of each plate, but the blood velocity is accelerated from manifold inlet to manifold outlet. In addition, the blood shear is also maintained substantially constant from manifold inlet to manifold outlet.

The system **20** of the present invention, as previously described, may have other safety features not illustrated. For instance, an air bubble detection device may be included on the return tubing **37** and there may be a blood leak detector or other such equipment elsewhere located in the system, all well within the skill of the art.

An important and unique feature of the blood fractionator **25** is the minimum volume of the device. All of the blood channels of the device **25**, including both end manifolds **110**, **110*a***, have a volume less than 2.5 ml. volume of the plasma compartments, including manifolds, is less than 2 ml. This feature, not present in previously described devices, minimizes blood loss by the donor and maximizes plasma recovery. The minimal amounts of plasma left in the device **25** are important to commercial utilization of the device. Accordingly, low blood and plasma retention volumes of less than 10 mls is an important commercial feature of the invention. Total blood volume of the tubing plus fractionator **25** is estimated to be less than 20 ml.

Total membrane area of the device is 176 cm^2 whereas previously described devices may use as much as 10,000 cm^2 of membrane. The reduction of membrane area contributes significantly to reduction of costs. This is a substantial improvement over prior art devices which require larger quantities of membrane, thereby resulting in a substantially more expensive device, not suitable for a disposable device.

An important aspect of the present invention is that the blood fractionating system **20** and the blood fractionator **25** thereof are uniquely adapted for use in an automated system which can be easily tailored or customized for each individual donor. Referring to FIG. **20** there is illustrated such an automated system, generally designated by the numeral **300**. The system **300** includes a microprocessor **301** coupled to a keyboard **302** for selectively inputting information to the microprocessor **301**, along with a display screen **303**, an indicator array **304** and a printer **305** for outputting information from the microprocessor **301**. The system **300** also includes an anticoagulant pump **306** for pumping anticoagulant from an associated source, such as a citrate bag **307** and a blood pump **308**, the pumps **306** and **308** being substantially identical to the pumps **31** and **31A** described above in connection with FIG. **1**. A scale **309** is provided for weighing the collected plasma, the scale **309** being coupled to the microprocessor **301** for transmitting weight information thereto.

Referring also to FIG. **23**, the system **300** also includes a disposable fractionator unit **310**, which is similar to the fractionator system **20** described in connection with FIG. **1**. The disposable fractionator unit **310** includes a catheter or double lumen needle **28** adapted to be inserted into the donor's arm **30**, and having a collection leg coupled to one end of a supply tube **312**. The other end of the tube **312** is coupled to one input of a mixer **13**, which has another input connected to one end of an anticoagulant tube **314**. Connected to the free end of the tube **314** is a spike **315** for insertion in the citrate bag **307**. The mixer **313** has a monitoring port which is coupled to one end of a pressure line **316**, the other end of which is provided with a coupler **317**. The output of the mixer **313** is coupled to one end of a tube **318**, the

other end of which is coupled to the input of a T-fitting **319**.

The fitting **319** has a monitoring port which is coupled to one end of a pressure line **320**, the other end of which is provided with a coupler **321**. The outlet of the fitting **319** is connected to one end of a tube **322**, the other end of which is coupled to the inlet of the blood fractionator **25**. The blood outlet port of the fractionator **25** is coupled to one end of a tube **323**, the other end of which is coupled to the inlet end of a bubble detector **323A**. The outlet of the bubble detector **323A** is coupled to one end of a tube **323B**, the other end of which is adapted to be coupled to the return leg of the double lumen needle **28**. The plasma outlet port of the fractionator **25** is coupled to one end of a tube **324**, the other end of which is coupled to the inlet of a plasma bag **325**.

The plasma bag **325** may be of the type illustrated in FIG. **24**, and will preferably be packaged with a second bag **326**, which may be needed for donors weighing over 167 pounds. The second bag has a spike assembly including a tube **329** adapted to be coupled to a nipple in the bag **325** to provide an overflow connection between the bags **325** and **326** when both are used. It will be appreciated that the disposable fractionator unit **310**, which includes all of the structure in FIG. **23**, is preassembled as a unit and, after use, the plasma bag **325** may be separated and the remainder of the fractionator unit **310** may be disposed of.

Referring also to FIGS. **21** and **22**, the system **300** includes a console unit **330** comprising a lower box-like housing **331** and an upper box-like housing **332**, mounted above the rear end of the lower housing **331** by means of a vertical support post **333**. Preferably, the printer **305**, the scale **309**, motors for the pumps **306** and **308**, a power supply, and pressure transducers are all mounted within the lower housing **331**, while the pumps **306** and **308** are mounted on the top wall **334** of the lower housing **331** externally thereof. The microprocessor **301**, the keyboard **302**, the display screen **303** and the indicator array **304** are all mounted in the upper housing **332**, interconnections between the lower and upper housings **331** and **332** being provided through the support post **333**, which may be hollow.

Also mounted on the top wall **334** of the lower housing **331** is a fractionator holder **335**, which includes a lower plate **336** fixedly secured to the top wall **334** and an upper plate **337** which is disposable above the lower plate **336** for cooperation therewith to clamp the fractionator **25** therebetween, the parts being secured in place by fasteners **338**. Formed in the top wall **334** of the lower housing **331** is a large rectangular opening **339** (see FIG. **24**), in which the scale **309** is mounted. The scale **309** includes a receptacle **340** which is generally in the form of an open-top rectangular box. Integral with the side walls of the receptacle **340** at the upper end thereof and extending laterally outwardly therefrom substantially perpendicular thereto around the entire perimeter thereof is a support flange **341**, which is provided at its outer edge with a depending retaining flange **341** extending around the entire circumference thereof.

In use, the receptacle **340** fits in the opening **339** with the support flange **341** overlying the upper edge of an upstanding lip **343** on the lower housing top wall **334** around the entire perimeter of the opening **339**. It will be appreciated that the retaining flange **342** cooperates with the lip **343** to provide a splashproof interlock to prevent any loose liquid in the receptacle **340** from falling through the opening **339**. As can be seen in FIG. **24**, the receptacle **340** is suspended above the lip **343**, being resiliently supported in any suitable manner on the scale **309**. The bottom wall of the receptacle **340** is provided with a depending rectangular clamp well **344**, the upper end of which is widened, as at **345**. A clamp **346** is adapted to be disposed in the clamp well **344**, and includes a rectangular main plate **347**, the lower end of which carries a pair of pivoting wings **348** respectively disposed on the opposite sides of the main plate **347**. Each wing carries at its distal end a gripping bead **349**, substantially circular in transverse cross section. The receptacle **340** and clamp **346** may be of the type disclosed in copending U.S. application Ser. No. 684,020, filed Dec. 20, 1984, and entitled "Bag Clamping Device to Automatically Control Volume and Overflow".

In use, the plasma bags **325** and **326** are respctively disposed on opposite side of the main plate **347** of the clamp **346**. Each bag is folded in half and the folds are inserted between the main plate **347** and the wings **348**, which are then pivoted up for cooperation with the main plate **347** to clamp therebetween the folds. Then the clamp **346** is inserted in the clamp well **344**, which is dimensioned so that the gripping beads **349** are interference fitted in the widened upper end **345** of the well **344**, with the wings **348** being disposed snugly along the inner surfaces of the well **344**.

Refering now to FIG. **21**, the front wall of the lower housing **321** is provided with a printer output **350** which may emit a printed paper tape, or the like. Also mounted on this front panel are on ON-OFF switch button **51** and a control switch button **352** for the printer, as well as a power switch button **353** and a reset switch button **354** for the system **300**. Also mounted on this panel are Luer connectors **355** and **356** for respectively receiving the couplers **317** and **321** of the pressure lines **316** and **320**, the connectors **355** and **356** being coupled to suitable pressure sensors (not shown) inside the lower housing **331**.

The upper housing **322** carries on its side wall a bag holder **357** on which the citrate bag **30** can be hung. Mounted in suitable openings in the front panel of the upper housing **332** for viewing and access by a user are the keyboard **302**, the display screen **303** and the indicator array **304**. The keyboard **302** includes a key pad **360** as well as a START switch **361** and a STOP switch **362**. The indicator array **304** includes an alarm indicator light **365**, as well as a pressure gauge **366**, an anticoagulant flow gauge **367** and a blood flow gauge **368**. The pressure gauge **366** registers the so-called "trans-membrane pressure", i.e., the pressure at the inlet of the fractionator **25**, as detected by a sensor coupled to the pressure fitting **356**.

It will be appreciated that the microprocessor **301** operates under stored program control, the operation of the program being illustrated in the flow diagram of FIGS. **25A–25C**. The program is menu-driven, with the menu messages appearing on the display screen **303**. The various display messages which appear during the operation of the program, the possible user replies and the response of the system **300** to these replies are all set forth in Table V at the end of the specification. Referring now to the flow diagram of FIGS. **25A–25C** and the messages of Table V, the operation of the system **300** will be described.

First of all, the power button **353** is pressed to power up the system, indicated at block **370** in the flow diagram. At this point, message **1** appears on the screen, as indicated in block **371**, the text of the message appearing

in Table V. In Table V, the message number of label is indicated above the text of the message. At block **372**, the system then conducts a number of electronic hardware tests, and at decision **372** asks if all the tests have been passed successfully. If they have, the program drops to decision **374**, and displays message **4**. If all tests are not satisfactory, the fault must be in the scale or in one of the transducers. Thus, the program moves to block **375** and displays message **2** or **3** according to the nature of the fault, as indicated by blocks **376** and **378**. After a predetermined delay, the program moves to block **377** and shuts down the machine rendering it inoperable.

Message **4** in decision **374** asks the user if he wants to review the system instructions. If an instruction review is requested, the program moves to block **379** and displays messages **5–11**, then moving to block **380**. It will be appreciated that in the case of multiple sequential messages, the messages do not appear on the screen simultaneously, but rather are sequentially actuated by user operation of a key on the key pad **302**, as is standard procedure in the menu-driven systems. The particular buttons actuated by the user are set forth in Table V. If no review is requested, the program moves directly from decision **374** to block **380** and displays message **12** which displays the date and time and asks if the user wants to change them. The user response is evaluated at decision **381**. If a change is requested, the program moves to block **382** to display enter date message **13**. After the user enters the date the program moves to decision **383**. Format and content of the entry are evaluated. If an error exists, the program moves to block **384** where one of two error messages are displayed. Control then returns to block **382**. If no error exists the program moves to block **385** to display enter time message **14**, whereupon a time entry is made by the user. At decision **386** format and content are evaluated. If an error exists the program moves to block **387** where one of two errors are dispayed. It then returns to block **385**. If no error exists, the program moves to decision **388**. If transducers have not been calibrated within one week's time, the program moves to a transducer calibration routine in block **389**. "Transducer-Cal" message and "Cal"-messages **1–4** (see end of Table V) guide the user through the routine. The program then resumes at decision **390**, where the user is asked if the scale is to be calibrated. If a calibration is requested, the program moves to block **391** to display messages **16–21** which instruct the user in scale calibration. At this point, the user follows the directions in the messages **16–21** and performs the scale calibration.

First, the user makes certain that the receptacle **340** is not touching the top wall **334** of the lower housing **331**, and all items are removed from the receptacle **340**. A 2 Kg. weight may be provided with the system as a weight reference standard. When the calibration procedure is followed, the measured weight should agree with the standard weight within +/−2 gram. At decision **392**, the program asks if the scale is within tolerance. If it is, it proceeds to decision **395**. If it is not, the program then asks at decision **393** if this is the fifth calibration attempt. If it is not, the program returns to block **391** for a retry. If this is the fifth calibration attempt, the program moves from decision **393** to block **394**, displaying exit message **22**. The machine is shut down and rendered inoperable.

After successful calibration of the scale, message **23** at decision **395** asks if the user wishes to calibrate the pumps. If no pump calibration is requested, the program proceeds to block **398**. If pump calibration is requested, the program moves to block **397** and displays messages **24–31**, which lead the user through the pump calibration procedure. In this regard, calibration kits may be provided with the system for use in calibration of the citrate pump **306** and the blood pump **308**. At the end of calibration the calibration results are printed by printer **350**.

At block **398**, the program displays messages **32–36**, which direct the user in entry and validation of donor data, including a donor ID number, donor weight in pounds, donor hematocrit in percent and donor sex. If either the weight or hematocrit values are beyond acceptable ranges, the program displays appropriate messages indicating that the donor is unacceptable and, at decision **400**, displays the "Reset" message to ask the user if the system should stop. If the answer is yes, it moves to block **401**, displays "End Message" and stops the machine. If no, the program returns to block **398**.

If the data is acceptable, the program proceeds to block **402** and displays messages **37–43** which direct the user in the procedure for purging air from the system. At this point, the user will place the disposable fractionator unit **310** in place in the system **300**, in the configuration illustrated in FIGS. **20** and **22**. The plasma bag **325** (and **326**, if necessary) is clamped in the receptacle **340** in the manner explained above. The fractionator **325** is mounted in the holder **335**, the tube **318** is placed in the blood pump **308** and the tube **314** is placed in the citrate pump **306**, and the spike **315** is inserted in the citrate bag **307**. The bubble detector **323A** is placed in an associated holder (not shown) on the lower housing **331**, and the couplers **317** and **321** of the pressure lines **316** and **320**, are respectively coupled to the Luer connectors **355** and **356**. The citrate bag **307** is then unclamped, and the system operates the citrate pump **306** to drive citrate to purge air from the tubes **312** and **314**. The blood pump then operates at a flow rate less than that of the citrate pump to purge air from the remainder of the system, the plasma bag **325** being clamped during this procedure. The bubble detector **323A** will cause an alarm to sound until all the air has been purged. Message **42** instructs the user to press STOP when all air is purged.

Next, the program moves to block **403** and displays message **44**, directing the user to connect the system to the donor. More specifically, the double-lumen needle **28** is inserted in the donor's vein and the clamps are removed from the plasma bag **325**. The user then presses the START button, and the program moves to block **404** to initialize the system algorithm and move the program into a main loop, the return leg of which is designated at triangle **404A**.

The system algorithm is set forth in Table VI at the end of the specification. The constants in step **1** are predetermined and placed in the system beforehand. In response to the start of the procedure at block **404**, the initialization of the algorithm occurs at steps **2** and **3**. The system also tares the scale weight to zero, turns on the pumps **306** and **308** and ramps them to a final speed over a time period of about five seconds at stop **4**. The program then moves to blocks **405** and **406**, repeatedly performing the measurements and calculations set forth at steps of the algorithm, updating these values each time the program cycles through the main loop, and displaying the values in "Run"-message (Table V) which is updated approximately every two seconds.

Terumo v. Haemonetics - PGR2025-00077
Petitioner Terumo Exhibit 1004-0024

The main loop consists of FIG. 25C and triangle 404A and blocks 405 and 406 of FIG. 25B. During each traverse of this loop, the program moves to decision 407 to determine if the input pressure to the blood pump 308, as sensed via the tube 316, is within specifications. If it is, the program proceeds directly to decision 413, to check the output pressure ff the pump 308, i.e., the trans-membrane pressure of the fractionator 25, as sensed via the pressure line 320. If the input pressure is not correct, the program proceeds to block 408, sends an alarm, displays "Low-Press-Error" message, and ramps down the pumps 306 and 308. If the input pressurefalls below preset limits and pump speed has not changed, there must have been an increase of input resistance. The usual cause is inadequate blood flow from the vein. This, in turn, may be caused by a kinked tubing, a poorly placed needle, or a blood clot in the input line. The display asks the user to make certain checks and adjustments, and the program then moves to decision 409 to determine if the error has been corrected. If it has not, the user is asked if the program should stop at decision 410. If yes, it moves to block 411 and the machine is stopped. If no, the program resumes at 408 and continues to display the appropriate message. If the error is corrected, the program moves to block 412, clears the alarm and message and ramps up the pumps to resume the procedure.

In a similar manner, if the output pressure is incorrect, the program proceeds from decision 413 to block 414, sending an alarm and displaying "High-Press-Error" message and ramps down the pumps. The major component of flow resistance is the fractionator 25, and the blood pump output pressure approximates the trans-membrane pressure of the fractionator 25, which is displayed continuously on the pressure gauge 366. A rise in this pressure signifies increased resistance downstream from the blood pump. This may occur in the fractionator 25, the return tube 323, the bubble detector 323A or the tube 323B. A slight rise during the procedure is normal and represents gradual membrane pore size reduction by protein deposition. After the indicated checks have been made, the program moves to decision 415 and checks to see if the error has been corrected. If it is not, the user responds to decision 416 with yes or no. If yes, the program moves to block 417 where "End-Message" displays and the machine stops. If no, the program returns to block 414. If the error is corrected, the program moves to block 418 to clear the alarm and message and ramp up the pumps.

The program drops to decision 425 and asks if the STOP button 362 has been pressed. (Decision 419 and its branches are shown as part of the main loop but represent an interrupt, to be described later.) If it has, the program moves to block 426 and displays "Stop-Message" which asks the user if he really intended to stop. The program then moves to decision 427 and, if the user indicates that he does intend to stop, the program moves to block 428 to display "End-Message" and then stops the machine. If the user indicates that he does not intend to stop, the program resumes the main loop, proceeding to decision 429.

At decision 429 the program determines whether the desired weight of plasma has been collected. If it has, the program moves to block 430, stops the pumps and displays "End-Message" indicating that the plasma collection is complete. It then moves to block 431 and prints Print 3 (Table V). The program stops at blocks 432 and 433. If the desired amount of plasma has not yet been collected, the program returns to the start of the main loop, at triangle 404A.

If an air bubble has been detected, the program is interrupted immediately and moves to block 419 and stops the pumps 306 and 308, sounds an alarm and displays the "Bubble-Error" message at block 420 which directs the user to make certain checks, or to press the STOP button 362 to terminate the procedure. The program then moves to decision 421 to see if the error has been corrected. If it has, the program moves to block 424 to clear the alarm and message and ramp up the pumps, proceeding then to the point in the main loop at which the interrupt occurred. If the error has not been corrected, the program moves to decision 422. If the STOP button 362 has been pressed, the program moves to block 423, "End-Message" is displayed and the machine stops. If the STOP button is not pressed, the program returns to block 420 and continues the alarm message.

When the desired amount of plasma has been collected, the plasma bag 325 is clamped and severed from the remainder of the disposable fractionator unit 310, which then can be discarded. The system 300 is reset and a new collection procedure can then begin. It will be appreciated that if both bags 325 and 326 are used, when the bag 325 is filled, the plasma will flow automatically through the tube 329 into the bag 326. When the collection is completed, the system creates a printout of the data pertinent to that collection procedure. The data printed out is set forth in Print 3.

In a preferred embodiment of the invention, the system 300 is programmed to pump blood at 60 ml. per minute. Citrate-saline solution is pumped from the citrate bag 307 at a rate sufficient to dilute incoming plasma to 68% of the initial concentration. The total plasma collected is 18% of the calculated donor circulating plasma volume. Taking plasma volume at 5% of body weight, plasma collected will be 4.08 ml. per pound of body weight. If either pump 306 or 308 is slowed down by changes in pressure, both pumps slow proportionately and the ratio of the citrate to plasma flow remains constant. The system 300 operates so that the pumps 306 and 308 pump the preselected amount or they pump nothing. This prevents undetected slowing down of one pump relative to the other. Since the blood pump 308 pumps faster than the citrate pump 306, citrate always flows toward the fractionator 25, not toward the donor. The concentration of citrate is low enough that systemic citrate levels can never reach toxic concentrations. Since citrate is metabolized rapidly as a normal metabolite, systemic anticoagulation cannot occur as is the case with anticoagulants, such as heparin. The total volume of blood in the system 300 is less than 25 ml., so that a technical problem does not produce undue blood loss. When necessary, a new setup can be easily installed with minimal blood loos. The volume of citrate infused is less than the volume of plasma removed unless the filtration fraction falls below 0.3. Even if plasma were not filtered, the citrate infusion volume would not exceed 900 ml. per hour.

TABLE V

PLASMAPHERESIS CONSOLE MESSAGES

```
                MESSAGE 1
****************************************** Message displays on POWER ON.
*                WELCOME                 * Machine performs internal checks
*     TO THE PLASMAPHERESIS SYSTEM       *  of components.
* PLEASE WAIT UNTIL THE SYSTEM IS TESTED * If okay GOTO Message 4.
*         INSTRUCTIONS WILL FOLLOW.......* If scale error GOTO Message 3.
****************************************** If sensor error GOTO Message 2.

                MESSAGE 2
****************************************** Message displays.
*                                        * Program terminates.
*TRANSDUCERS ARE NOT FUNCTIONING PROPERLY*
*                                        *
* PLEASE CHECK TROUBLE SHOOTING MANUAL...*
******************************************

                MESSAGE 3
****************************************** Message displays.
*                                        * Program terminates.
* THE SCALE IS NOT FUNCTIONING PROPERLY  *
*                                        *
* PLEASE CHECK TROUBLE SHOOTING MANUAL...*
******************************************

                MESSAGE 4
****************************************** If YES pressed GOTO Message 5.
*      DIAGNOSTIC CHECKS WERE OKAY.      * If NO pressed GOTO Message 12.
*  DO YOU WISH TO REVIEW INSTRUCTIONS?   *
*                                        *
*            PRESS <<YES>> OR <<NO>>.....*
******************************************

                MESSAGE 5
****************************************** If ENTER pressed GOTO Message 6.
*       THIS IS THE SETUP PERIOD         * If REDO pressed GOTO Message 4.
*YOU MAY RECALL A PROCEDURE WITH <<REDO>>*
* YOU MAY ERASE AN ENTRY WITH <<CLEAR>>  *
*            PRESS <<ENTER>> TO CONTINUE.*
******************************************

                MESSAGE 6
****************************************** If ENTER pressed GOTO Message 7.
*  PRESSING << REDO >> WILL RETURN YOU   * If REDO pressed GOTO Message 5.
*TO THE BEGINNING OF THE PREVIOUS DISPLAY*
*   YOU MAY TRY THIS NOW IF YOU WISH     *
*            PRESS <<ENTER>> TO CONTINUE.*
******************************************

                MESSAGE 7
****************************************** If ENTER pressed GOTO Message 8.
*  DURING SETUP YOU WILL BE ASKED TO DO  * If REDO pressed GOTO Message 6.
*   VARIOUS TASKS. YOU MAY BE ASKED TO   *
*  ENTER DATA OR TO PERFORM PROCEDURES.  *
*            PRESS <<ENTER>> TO CONTINUE.*
******************************************

                MESSAGE 8
****************************************** If ENTER pressed GOTO Message 9.
* IF YOU MAKE A SETUP ERROR REMEMBER THAT* If REDO pressed GOTO Message 7.
* <<STOP>> AND <<REDO>> ALLOW YOU TO MAKE*
*  CORRECTIONS. USE <<CLEAR>> FOR TYPOS. *
*            PRESS <<ENTER>> TO CONTINUE.*
******************************************
```

```
                MESSAGE 9
****************************************** If ENTER pressed GOTO Message 10.
* DURING SETUP AND DURING PLASMAPHERESIS * If REDO pressed GOTO Message 8.
* YOU MAY BE ASKED TO REPLY TO QUESTIONS *
*     BY PRESSING <<YES>> OR <<NO>>.     *
*            PRESS <<ENTER>> TO CONTINUE.*
******************************************

                MESSAGE 10
****************************************** If ENTER pressed GOTO Message 11.
*   PRESS NUMERIC KEYS TO ENTER DATA.    * If REDO pressed GOTO Message 9.
* PRESS <<ENTER>> TO COMPLETE THE ENTRY. *
*   PRESS <<CLEAR>> TO ERASE AN ERROR.   *
*            PRESS <<ENTER>> TO CONTINUE.*
******************************************

                MESSAGE 11
****************************************** If ENTER pressed GOTO Message 12.
* IF YOU WISH TO REVIEW ANY INSTRUCTIONS,* If REDO pressed GOTO Message 10.
*   PRESS <<REDO>> UNTIL THE SCREEN YOU  *
*       WISH TO SEE IS DISPLAYED.        *
*            PRESS <<ENTER>> TO CONTINUE.*
******************************************

                MESSAGE 12
****************************************** Time and date are displayed.
*          THE DATE IS :   .  .          * If YES pressed GOTO Message 13.
*          THE TIME IS :   .             * If NO pressed GOTO Message 15.
*          CHANGE TIME OR DATE?          * If REDO pressed GOTO Message 11.
*            PRESS <<YES>> OR <<NO>>.....*
******************************************

                MESSAGE 13
****************************************** User enters date.
*       ENTER THE DATE AS MM.DD.YY       * If a format error GOTO Format_error.
*       FOR EXAMPLE: 08.15.85            * If a content error GOTO Content_error.
*       PRESS <<ENTER>> IF NO CHANGE     * If data correct GOTO Message 14.
*       ENTER DATE :                     * If REDO pressed GOTO Message 12.
******************************************

              FORMAT_ERROR  MESSAGE 13A
****************************************** If START pressed GOTO Message 13.
*        DATE FORMAT IS MM.DD.YY         * If REDO pressed GOTO Message 13.
*        USE ZERO IF NO NUMBER.          *
*        PLEASE REENTER DATE.            *
*          PRESS <<START>> WHEN READY....*
******************************************

              CONTENT_ERROR  MESSAGE 13B
****************************************** User's entry displayed.
*    THIS IS YOUR DATE ENTRY:            * If START pressed GOTO Message 13.
*  EITHER THE DAY OR MONTH IS WRONG.     * If REDO pressed GOTO Message 13.
* DATE FORMAT IS MM.DD.YY  PLEASE REENTER*
*          PRESS <<START>> WHEN READY....*
******************************************

                MESSAGE 14
****************************************** If ENTER pressed GOTO Message 15.
*       ENTER THE TIME AS HH.MM          * If REDO pressed GOTO Message 13.
*  (INTERNATIONAL TIME) EXAMPLE: 14.15   * If a format error GOTO Time_format
*       PRESS <<ENTER>> IF NO CHANGE     * If a content error GOTO Time_content.
*       ENTER TIME :                     * If data correct GOTO Message 15.
******************************************
```

```
                TIME_FORMAT   MESSAGE 14A
****************************************** If START or REDO pressed GOTO Message 14
*         TIME FORMAT IS HH.MM           *
*         USE ZERO IF NO NUMBER.         *
*         PLEASE REENTER TIME.           *
*          PRESS <<START>> WHEN READY....*
******************************************

                TIME_CONTENT  MESSAGE 14B
******************************************
*   THIS IS YOUR TIME ENTRY:             * Data is displayed.
*   EITHER THE HOUR OR MINUTE IS WRONG.  * If START or REDO pressed GOTO Message 14.
*  TIME FORMAT IS HH.MM  PLEASE REENTER  *
*           PRESS <<START>> WHEN READY....*
******************************************
*** Before Message 15 is displayed check date of last transducer calibration**
*** If more than one week GOTO Transducer_cal ***

                MESSAGE 15
****************************************** If NO pressed GOTO Message 23.
*       SCALE SHOULD BE CALIBRATED       * If REDO pressed GOTO Message 13.
*      AT THE BEGINNING OF EACH DAY.     * If YES pressed GOTO Message 16.
*    DO YOU WISH TO CALIBRATE SCALE?     *
*            PRESS <<YES>> OR <<NO>>.....*
******************************************

                MESSAGE 16
****************************************** User follows instructions.
*     REMOVE ALL OBJECTS FROM SCALE      * If START pressed GOTO Message 17.
*      INCLUDING BAG HOLDER CLAMP        * If REDO pressed GOTO Message 15.
*                                        * If START pressed scale placed in
*            PRESS <<START>> WHEN READY..*  calibration mode.
******************************************

                MESSAGE 17
****************************************** User places calibration weight on
*                                        *  scale. REDO not permitted.Only
*  PLACE 2 KG WEIGHT IN CENTER OF SCALE. *  START recognized.
*                                        * When START pressed calibration
*            PRESS <<START>> WHEN READY..*  is completed and GOTO Message 18.
******************************************

                MESSAGE 18
****************************************** User follows instructions.
*                                        * If REDO pressed GOTO Message 16.
*     REMOVE 2 KG WEIGHT FROM SCALE.     * If START pressed scale is tared
*                                        *  and GOTO Message 19.
*            PRESS <<START>> WHEN READY..*
******************************************

                MESSAGE 19
****************************************** User follows instructions.
*                                        * If REDO pressed GOTO Message 16.
*      PLEASE VERIFY CALIBRATION.        * When START pressed scale takes a
*  PLACE 2 KG WEIGHT IN CENTER OF SCALE. *  reading and compares it to 2 kg.
*           PRESS <<START>> WHEN READY...*  GOTO Message 20 if reading is within
******************************************   2 grams. GOTO Message 21 if error.

                MESSAGE 20
****************************************** If START pressed GOTO Message 23.
* THE MEASURED WEIGHT  IS:       GRAMS.  * If REDO pressed GOTO Message 16.
* DIFFERENCE FROM 2 KG IS:       GRAMS.  *
*    THE SCALE IS WITHIN TOLERANCE.      *
*           PRESS <<START>> WHEN READY...*
******************************************
```

MESSAGE 21

```
****************************************
* THE MEASURED WEIGHT  IS:       GRAMS.  *
* DIFFERENCE FROM 2 KG IS:       GRAMS.  *
* OUT OF TOLERANCE - PLEASE RECALIBRATE  *
*          PRESS <<START>> WHEN READY...*
****************************************
```

If START or REDO pressed GOTO Message 16.
If this message is read 5 times GOTO Message 22.

MESSAGE 22

```
****************************************
*   SCALE MALFUNCTION. PLEASE TURN OFF   *
*     THE MACHINE AND REFER TO THE       *
*  TROUBLESHOOTING GUIDE IN THE MANUAL.  *
*                                        *
****************************************
```

User informed of failure after 5 trials. Program terminates. Program cannot be rerun without scale calibration.

MESSAGE 23

```
****************************************
*      PUMPS SHOULD BE CALIBRATED        *
*     AT THE BEGINNING OF EACH DAY.      *
*     DO YOU WISH TO CALIBRATE THEM?     *
*           PRESS <<YES>> OR <<NO>>.....*
****************************************
```

If YES pressed GOTO Message 24.
If NO pressed GOTO Message 32.
If REDO pressed GOTO Message 16.

MESSAGE 24

```
****************************************
* PLACE CALIBRATION KIT TUBING IN PUMPS. *
*  NOTE THAT THE TUBES DIFFER IN SIZE.   *
*  ASSURE THAT TUBING-PUMP PAIRS MATCH.  *
*          PRESS <<ENTER>> TO CONTINUE..*
****************************************
```

User follows instructions.
If ENTER pressed GOTO Message 25.
If REDO pressed GOTO Message 23.

MESSAGE 25

```
****************************************
*   ADJUST PUMPS FOR PROPER OCCLUSION    *
*   REMOVE BAG HOLDER CLAMP FROM SCALE   *
*PLACE EMPTY CONTAINER IN CENTER OF SCALE*
*         PRESS <<ENTER>> TO CONTINUE...*
****************************************
```

User follows instructions.
If ENTER pressed GOTO Message 26.
If REDO pressed GOTO Message 24.

MESSAGE 26

```
****************************************
*   PLACE ENDS OF TUBES IN CONTAINER.    *
* TUBES MUST NOT MOVE DURING CALIBRATION *
*                                        *
*         PRESS <<START>> WHEN READY....*
****************************************
```

User follows instructions.
If START pressed GOTO Message 27.
If REDO pressed GOTO Message 25.

MESSAGE 27

```
****************************************
*  CITRATE PUMP CALIBRATION IN PROGRESS  *
*       NO OF GRAMS    :                 *
*       NO OF SECONDS  :                 *
*        PRESS <<STOP>> TO HALT PROCESS..*
****************************************
```

Scale is tared, reading is taken, time is marked and citrate pump runs at fixed rpm. Display is updated every 5 seconds.
If STOP pressed GOTO Message 29.
At end of 60 seconds pump stopped and GOTO Message 28.

MESSAGE 28

```
****************************************
*   BLOOD PUMP CALIBRATION IN PROGRESS   *
*       NO OF GRAMS    :                 *
*       NO OF SECONDS  :                 *
*        PRESS <<STOP>> TO HALT PROCESS..*
****************************************
```

Citrate ml/rev calculated, scale is tared, time is marked and blood pump runs at fixed rpm. Display updated every 5 seconds.
If STOP pressed GOTO Message 30.
At end of 60 seconds pump stopped and GOTO Message 31.

```
                MESSAGE 29
****************************************** Citrate pump stopped.
*     CITRATE PUMP CALIBRATION STOPPED ! * If REDO pressed GOTO Message 23.
*                                        * If START pressed GOTO Message 27.
*     PRESS <<REDO>> TO RESTART SETUP    *
*        PRESS <<START>> TO CONTINUE.....*
******************************************

                MESSAGE 30
****************************************** Blood pump stopped.
*     BLOOD PUMP CALIBRATION STOPPED !   * If REDO pressed GOTO Message 23.
*                                        * If START pressed GOTO Message 28.
*     PRESS <<REDO>> TO RESTART SETUP    *
*        PRESS <<START>> TO CONTINUE.....*
******************************************

                MESSAGE 31
****************************************** When REDO or ENTER pressed GOTO
*     BOTH PUMPS ARE CALIBRATED.         *  Print 1.
*                                        * After Print 1 if REDO was pressed
*     PRESS <<REDO>> TO RESTART SETUP    *  GOTO Message 26. If ENTER was
*        PRESS <<ENTER>> TO CONTINUE.....*  pressed GOTO Message 32.
******************************************

     PRINT 1
=================      This message printed on 16 column printer
!CITRATE PUMP=   !      at end of Message 31.
!      ML/REV    !
!BLOOD PUMP=     !
!      ML/REV    !
=================

                MESSAGE 32
****************************************** User enters donor I.D. number
*                                        *  and presses ENTER.
*  ENTER THE DONOR ID NUMBER:            * When ENTER pressed GOTO Message 33.
*                                        *
*                                        *
******************************************

                MESSAGE 33
****************************************** User enters <1> or <2> and presses
*                                        *  ENTER.
* ENTER DONOR SEX (1=FEMALE; 2=MALE):    * When ENTER pressed GOTO Message 34.
*                                        *
*                                        *
******************************************

                MESSAGE 34
****************************************** User enters donor's hematocrit value.
*                                        * When ENTER pressed check value for
* ENTER DONOR HEMATOCRIT (PER CENT):     *  lower limits of male and and female.
*                                        * If less than 38 and female GOTO Crit_error_female.
*                                        * If less than 41 and male GOTO Crit_error_male.
****************************************** If value okay GOTO Message 35.

              CRIT_ERROR_MALE
****************************************** Display value entered.
*   HEMATOCRIT ENTERED IS      PER CENT   * If YES pressed GOTO Donor_end.
*    THE VALUE IS TOO LOW FOR A MALE      * If NO pressed GOTO Message 34.
*     IS THIS HEMATOCRIT CORRECT?:        *
*            PRESS <<YES>> OR <<NO>>.....*
******************************************
```

```
            CRIT_ERROR_FEMALE
****************************************** Display value entered.
*   HEMATOCRIT ENTERED IS      PER CENT   * If YES pressed GOTO Donor_end.
*   THE VALUE IS TOO LOW FOR A FEMALE     * If NO pressed GOTO Message 34.
*     IS THIS HEMATOCRIT CORRECT?:        *
*            PRESS <<YES>> OR <<NO>>.....*
******************************************

               MESSAGE 35
****************************************** User enters donor weight and
*                                        *  presses ENTER.
*  ENTER DONOR WEIGHT IN LBS:            * Value checked for upper and lower
*                                        *  acceptable limits. If out of range
*                                        *  GOTO Low_weight_error or High_weight_error.
****************************************** If value okay GOTO Message 36.

             LOW_WEIGHT_ERROR
****************************************** Display value entered.
*  DONOR WEIGHT ENTERED IS       POUNDS. * If YES pressed GOTO Donor_end.
*  THE WEIGHT IS LESS THAN 110 POUNDS!   * If NO pressed GOTO Message 35.
*      IS THIS WEIGHT CORRECT?:          *
*            PRESS <<YES>> OR <<NO>>.....*
******************************************

             HIGH_WEIGHT_ERROR
****************************************** Display value entered.
*  DONOR WEIGHT ENTERED IS       POUNDS. * If YES pressed GOTO Donor_end.
*  THE WEIGHT IS MORE THAN 300 POUNDS!   * If NO pressed GOTO Message 35.
*      IS THIS WEIGHT CORRECT?:          *
*            PRESS <<YES>> OR <<NO>>.....*
******************************************

                DONOR_END
****************************************** After display of message program
*                                        *  terminates.
*   SORRY. THIS DONOR IS UNACCEPTABLE.   * If RESET pressed GOTO Reset.
*  PRESS <<RESET>> TO RESET THE MACHINE..*
*                                        *
******************************************

                  RESET
****************************************** If YES pressed GOTO End_message.
*   RESET WILL CANCEL THIS PROCEDURE     * If NO pressed GOTO Message 32.
*    AND WILL START A NEW PROCEDURE.     *
*       ALL DATA WILL BE ERASED.         *
* DO YOU WISH TO RESET? <<YES>> OR <<NO>>*
******************************************

               MESSAGE 36
****************************************** Display values entered.
*   THESE ARE THE VALUES ENTERED :       * If YES pressed GOTO Message 34.
*       WEIGHT :      POUNDS             * If NO pressed GOTO Message 37.
*   HEMATOCRIT :      PER CENT           *
*    CHANGE VALUES?  <<YES>> OR <<NO>>   *
******************************************

               MESSAGE 37
****************************************** User follows instructions and
* THE NEXT STEPS WILL PURGE AIR FROM THE *  presses ENTER.
*   LINES AND FROM THE PLASMA SEPARATOR. * If REDO pressed GOTO Message 36.
* PLACE BAG OF CITRATE SOLUTION ON HOLDER* If ENTER pressed GOTO Message 38.
*          PRESS <<ENTER>> TO CONTINUE...*
******************************************
```

MESSAGE 38

```
****************************************
*      PLACE TUBING IN PUMPS.          *
*    PLACE PLASMA BAG IN SCALE.        *
* PLACE PLASMA SEPARATOR IN HOLDER.    *
*         PRESS <<ENTER>> TO CONTINUE...*
****************************************
```

User follows instructions and presses ENTER.
If REDO pressed GOTO Message 37.
If ENTER pressed GOTO Message 39.

MESSAGE 39

```
****************************************
*CLAMP CITRATE LINE AND INSERT BAG SPIKE.*
*ATTACH PRESSURE LINES TO LUER CONNECTORS*
*   PLACE NEEDLE IN WASTE RECEIVER.      *
*         PRESS <<ENTER>> TO CONTINUE...*
****************************************
```

User follows instructions.
If REDO pressed GOTO Message 38.
If ENTER pressed GOTO Message 40.

MESSAGE 40

```
****************************************
*         OPEN CITRATE LINE.           *
*   CLAMP PLASMA LINE NEAR PLASMA BAG. *
* PUMPS WILL PUMP CITRATE THROUGH SYSTEM.*
*         PRESS <<ENTER>> TO CONTINUE...*
****************************************
```

User follows instructions.
If REDO pressed GOTO Message 39.
If ENTER pressed GOTO Message 41.

MESSAGE 41

```
****************************************
*OBSERVE LINES FOR PURGING OF AIR BUBBLES*
*  ASSIST AIR REMOVAL BY GENTLE TAPPING  *
* <<START>> AND <<STOP>> CONTROL PUMPS.  *
*         PRESS <<START>> WHEN READY....*
****************************************
```

If REDO pressed GOTO Message 40.
If START pressed, citrate pump is turned on and slowly increases speed to maximum. Blood pump turns on and slowly increases to speed less than citrate pump. When both pumps are full speed GOTO Message 42.

MESSAGE 42

```
****************************************
*                                      *
* WHEN ALL AIR IS PURGED PRESS <<STOP>>..*
*                                      *
*                                      *
****************************************
```

When STOP pressed both pumps stopped and GOTO Message 43.

MESSAGE 43

```
****************************************
*                                      *
*     PLEASE WAIT FOR A FEW MOMENTS    *
*                                      *
*                                      *
****************************************
```

Message displayed. Internal calculations are made, scale is tared, transducers are zeroed, time is marked, and variables are initialized.
When internal calculations finished GOTO Message 44.

MESSAGE 44

```
****************************************
*   INSERT NEEDLE INTO DONOR'S VEIN.   *
*    REMOVE CLAMP FROM PLASMA LINE.    *
*   WHEN BLOOD EXITS THE SEPARATOR.    *
*         PRESS <<START>> WHEN READY....*
****************************************
```

If REDO pressed GOTO Message 37.
User places needle in donor vein.
When START pressed GOTO Print 2.
Printer started and then GOTO Run_message.

PRINT 2

```
==================
!BEGIN PROCEDURE !
!TIME :          !
!DATE :          !
!DONOR           !
!DONOR WEIGHT:   !
!      POUNDS    !
```

This message prints out while system is running.

```
!FEMALE (MALE)   !
!HEMATOCRIT      !
!BLOOD FLOW IS   !
!      ML/MIN    !
!CITRATE FLOW IS !
!      ML/MIN    !
!DILUTE PLASMA   !
!TO BE COLLECTED !
!  IS       ML   !
!PLASMA VOLUME   !
!TO BE COLLECTED !
!  IS       ML   !
==================
```

If STOP pressed during procedure GOTO Stop_message

RUN_MESSAGE

```
*****************************************
*   TOTAL TIME ELAPSED       =      MIN  *
*   DILUTE PLASMA COLLECTED  =      ML   *
*   DONOR  PLASMA COLLECTED  =      ML   *
*   TOTAL CITRATE RETURNED   =      ML   *
*****************************************
```

This display is updated every few seconds. If pressure errors or air bubble detected GOTO the appropriate Message. Weights are taken continuously. When desired plasma amount obtained GOTO End_message and Print 3.

HIGH_PRESS_ERROR

```
*****************************************
*     **DEVICE PRESSURE TOO HIGH**      *
*CHECK FOR OCCLUDED OR KINKED RETURN LINE*
*  CHECK SEPARATOR AND BUBBLE DETECTOR.  *
*      PRESS <<START>> WHEN CORRECTED....*
*****************************************
```

If output pressure exceeds upper limit display message and decrease pump speeds until pressure okay. Alarm flashes. When error corrected press START. GOTO Run_message.

LOW_PRESS_ERROR

```
*****************************************
****CITRATE PUMP INPUT PRESSURE TOO LOW***
* CHECK FOR OCCLUDED OR KINKED INPUT LINE*
*      CHECK NEEDLE FOR OCCLUSION.      *
*      PRESS <<START>> WHEN CORRECTED....*
*****************************************
```

If input pressure is below limits display message and decrease pump speeds until pressure okay. Alarm flashes. When error corrected GOTO Run_message.

BUBBLE_ERROR

```
*****************************************
*    **AIR DETECTED IN return LINE**    *
*  CHECK CONNECTIONS BEFORE CITRATE PUMP *
*   AND AFTER SEPARATOR. PRESS <<START>  *
*   WHEN CORRECTED OR <<STOP>> TO QUIT   *
*****************************************
```

Pumps stopped and message displayed any time a bubble is detected. If START pressed return to place program was stopped. If STOP pressed GOTO Stop_message.

STOP_MESSAGE

```
*****************************************
*    PROCEDURE STOPPED BY OPERATOR !!   *
*                                       *
*    DO YOU WISH TO STOP THE PROCESS?   *
*            PRESS <<YES>> OR <<NO>>.....*
*****************************************
```

If YES pressed GOTO End_message. If NO pressed return to point of stoppage.

END_MESSAGE

```
*****************************************
*       PROCEDURE HAS BEEN STOPPED.     *
*        ALL DATA HAS BEEN ERASED.      *
*THE CONSOLE IS READY FOR A NEW PROCEDURE*
*            PRESS <<START>> WHEN READY..*
*****************************************
```

If stop occurred during plasmapheresis GOTO Print_end and then terminate program. If stop occurred during setup terminate program.

```
    PRINT_END          Message printed at end of plasmapheresis.
==================
!PROCEDURE ENDED !
!TOTAL TIME:     !
!        MINUTES !
!TOTAL RUNTIME:  !
!        MINUTES !
!TIME :          !
!DATE :          !
!DONOR           !
!DONOR WEIGHT:   !
!      POUNDS    !
!FEMALE (MALE)   !
!HEMATOCRIT      !
!VOL.COLLECTED:  !
!PLASMA=       ML!
!DIL.PL=       ML!
!CITRATE RETURN= !
!          ML    !
==================

            TRANSDUCER_CAL
****************************************** Display message.
* PRESSURE TRANSDUCERS MUST BE CALIBRATED* When ENTER pressed GOTO Cal_message 1.
* LAST CALIBRATION WAS MORE THAN 1 WK AGO*
* PLEASE CALIBRATE OUTPUT PRESSURE FIRST *
*           PRESS <<ENTER>> TO CONTINUE..*
******************************************

             CAL_MESSAGE 1
****************************************** User follows instructions.
*                                        * When START pressed GOTO Cal_message 2
*                                        *
* REMOVE ANY CONNECTIONS TO OUTPUT PRESS *
*           PRESS <<START>> WHEN READY...*
******************************************

             CAL_MESSAGE 2
****************************************** User follows instructions.
*  ATTACH GAGE LINE TO OUTPUT CONNECTOR  * Message displays 150, 300, and 450
*                                        *  mm Hg in succession.
*  ADJUST GAUGE TO READ ABOUT     MMHG   * User enters gage reading.
*  ENTER EXACT READING ON GAGE:          * System calculates regression of
****************************************** transducer output vs pressure.
                                          After last entry GOTO Cal_message 3
              CAL_MESSAGE 3
****************************************** User follows instructions.
*                                        * When START pressed GOTO Cal_message 4
*                                        *
* REMOVE ANY CONNECTIONS TO INPUT PRESS  *
*           PRESS <<START>> WHEN READY...*
******************************************

             CAL_MESSAGE 4
****************************************** User follows instructions.
*  ATTACH GAGE LINE TO INPUT CONNECTOR   * Message displays -150, -300, and -450
*                                        *  mm HG in succession.
*  ADJUST GAUGE TO READ ABOUT     MMHG   * User enters gage reading.
*  ENTER EXACT READING ON GAGE:          * System calculates regression as above.
****************************************** When calculations finished GOTO
                                           Message 15.
```

CAL_MESSAGE 5

```
*****************************************
*                                       * This message is displayed between each
*   PLEASE WAIT FOR A FEW MOMENTS       *  gage entry for Cal_message 2 and 4.
*                                       *
*                                       *
*****************************************
```

TABLE VI

System Algorithm:

1. Place constants in system:

a.	HCTD	(donor hematocrit, decimal fraction)
b.	BW	(donor weight, pounds)
c.	PDF=0.68	(plasma dilution factor)
d.	CF=0.4706	(conversion factor, ml citrate per ml plasma)
e.	SGP=1.026	(specific gravity plasma)
f.	SGC=1.0024	(specific gravity citrate)
g.	SGDP=1.0184	(specific gravity dilute plasma)
h.	QB=60	(blood flow, ml/min)
i.	RSG=1/SGDP	
j.	C1=4.0824	(ml plasma collected/pound body weight)
k.	C2=6.0035	(ml dilute plasma collected/pound body weight)
l.	C3=1.9211	(ml citrate to be filtered/pound body weight)
m.	CMR	(citrate pump, ml per rev)
n.	BMR	(blood pump, ml per rev)

2. Calculate:

a.	QP=QB*(1-HCTD)	(plasma flow, ml/min)
b.	QC=QP*CF	(citrate flow, ml/min)
c.	QBP=QB+QC	(blood pump, ml/min)
d.	QCP=QC	(citrate pump, ml/min)
e.	BRPM=QBP/BMR	(blood pump, rpm)
f.	CRPM=QCP/CMR	(citrate pump, rpm)
g.	MAXPF=BW*C1	(total plasma to collect, ml)
h.	MAXDPF=BW*C2	(total dilute plasma to collect, ml)

i. MAXCF=BW*C3 (total citrate to collect, ml

j. MAXDPW=MAXDPF*SGDP (total dilute plasma to collect, gm)

3. Initialize sum variables to zero:

TDPW (total dilute plasma filtered, gm)

TDPF (total dilute plasma filtered, ml)

TPF (total plasma filtered, ml)

TQB (total blood flow, ml)

TQP (total plasma flow, ml)

TQC (total citrate flow, ml)

TRC (total citrate returned to donor, ml)

TQ (total flow, ml)

4. Ramp pumps to final rpm.

5. Main Loop:

A. Measure weight change per unit time for each pass through the loop.

B. Calculate:

TQB=TQB+(△t*(QBP-QCP)*0.0167)

TQP=TQB*(1-HCTD)

TQC=TQC+(△t*QCP*0.0167)

TQ=TQB+TQC

TDPW=total weight (total dilute plasma filtered, gm)

DPFW=(△weight/△time)*60 (dilute plasma filtered, gm/min)

DPF=DPFW*RSG (dilute plasma filtered, ml/min)

TDPF=TDPW*RSG (total dilute plasma filtered, ml)

PF=DPF*PDF (plasma filtered, ml/min)

TPF=TDPF*PDF (total plasma filtered, ml)

CF=PF*CF (citrate filtered, ml/min)

TCF=TPF*CF (total citrate filtered, ml/min)

TRC=TQC-TCF (total citrate returned to donor, ml)

C. Compare TPF with MAXPF.
If TPF less than MAXPF, repeat the loop.
If equal or greater, stop the program.

While there has been described what at present in considered to be the preferred embodiment of the present invention, it will be understood that various modifications and alterations may be made therein without departing from the true scope and spirit of the present invention which is intended to be covered in the claims appended hereto.

I claim:

1. A method of collecting plasma from a living donor thereof, comprising: ascertaining the donor's initial plasma volume, extracting blood from the donor, and separating plasma from the extracted blood until a predetermined percentage of the donor's initial plasma volume has been separated.

2. The method of claim **1**, wherein the plasma is separated from the donor's blood continuously until the predetermined percentage of the donor's initial plasma volume has been separated.

3. The method of claim **1**, wherein the plasma is separated from the donor's blood in a series of batch operations until the predetermined percentage of the donor's initial plasma volume has been separated.

4. The method of claim **1**, and further comprising returning to the donor the portion of the blood not separated.

5. A method of continuously collecting plasma from a human donor thereof, comprising: ascertaining the donor's initial plasma volume, passing at least a portion of the donor's blood through a device connected to the donor for continuously removing a portion of the plasma present in the blood until a predetermined portion of the donor's initial plasma volume has been removed from the donor.

6. The method of claim **5**, wherein the device is serially connected to the donor and the blood flows between the donor and the device in a closed loop.

7. The method of claim **5**, wherein the predetermined portion of plasma collected is a predetermined percentage and is substantially the same for each donor thereof.

8. The method of claim **7**, wherein the predetermined portion is in the range of from about 16% by volume to about 20% by volume of the donor's initial plasma volume.

9. The method of claim **8**, wherein the predetermined portion of the plasma collected from each donor is about 18% by volume.

10. The method of claim **5**, and further comprising sensing the amount of plasma removed from the donor until the predetermined portion of the initial plasma volume as been removed and thereafter stopping the removal of plasma in response to the amount of plasma collected.

11. The method of claim **10**, wherein the plasma volume is sensed by continuously weighing the plasma separated from the donor.

12. A method of adding anticoagulant to a source of blood, comprising: determining the plasma concentration in the blood, and adding an anticoagulant to the blood in an amount equal to a predetermined percentage of the plasma concentration.

13. The method of claim **12**, wherein the plasma concentration is automatically determined from the blood hematocrit value.

14. The method of claim **12**, wherein the ratio of the anticoagulant volume to the plasma volume in the blood is substantially the same for each source of blood.

15. The method of claim **12**, wherein the volume ratio of anticoagulant to plasma in the blood is maintained in the range of from about 0.40 to about 0.50.

16. The method of claim **12**, wherein the volume ratio of anticoagulant to plasma is maintained at substantially 0.47.

17. The method of claim **12**, wherein the source of blood is a batch of blood previously taken from a human donor.

18. The method of claim **12**, wherein the source of blood is a human donor and the blood is circulating in a closed loop to and from the donor during the addition of anticoagulant to the blood.

19. The method of claim **18**, and further comprising passing the blood through an extracorporeal device in the closed loop.

20. A method of collecting plasma from a human donor thereof, comprising: ascertaining the donor's initial plasma volume, introducing anticoagulant to the blood from which the plasma is to be collected in an amount which is a predetermined percentage of the plasma in the blood, separating plasma from the blood, and collecting the separated plasma until a predetermined portion of the initial plasma volume has been collected.

21. The method of claim **20**, wherein plasma is separated from the blood continuously, and anticoagulant is introduced into the blood only so long as plasma is being separated from the blood.

22. The method of claim **21**, wherein the anticoagulant flow is a function of plasma flow.

23. The method of claim **20**, wherein the anticoagulant is introduced into the blood in a batch process.

24. The method of claim **20**, wherein the anticoagulant is present in the range of from about 40% to about 50% by volume of the plasma volume in the blood.

25. The method of claim **20**, wherein the ratio of anticoagulant volume to plasma volume is substantially 0.47.

26. The method of claim **20**, wherein the ratio of anticoagulant to plasma is maintained substantially constant for each donor.

27. A system for collecting blood plasma from a living donor thereof, comprising means for ascertaining the initial volume of plasma in the donor, means for extracting blood from the donor, and means for separating a predetermined portion of the donor's initial plasma volume from the extracted blood.

28. The system of claim **27**, wherein said ascertaining means includes processing means operating under stored program control.

29. The system of claim **27**, and further comprising means for measuring the amount of plasma which has been separated, and means responsive to said measuring means for controlling the operation of said separating means.

30. The system of claim **27**, wherein said means for separating plasma from the blood includes a device connected in a closed blood loop with the donor for continuously passing blood through the device while separating plasma from the blood.

31. The system of claim **30**, wherein said means for separating plasma from the blood includes a blood pump serially connected to the device.

32. The system of claim **31**, and further comprising means for introducing anticoagulant to the blood in an amount equal to a predetermined percentage of the plasma in the blood.

33. The system of claim **32**, wherein said means for introducing anticoagulant includes an anticoagulant

source, a pump for pumping anticoagulant from said anticoagulant source into the closed loop, and means for controlling operation of the blood pump and the anticoagulant pump to deactivate same when the predetermined portion of the donor's initial plasma volume has been separated from the donor's blood.

34. The system of claim **33**, and further comprising means for maintaining the blood flow rate and the anticoagulant flow rate substantially constant.

35. The system of claim **33**, and further comprising means for controlling the anticoagulant flow rate as a function of plasma flow rate.

36. The system of claim **31**, and further comprising means for controlling the blood pump to deactivate same when the predetermined portion of the donor's initial plasma volume has been separated from the donor's blood.

37. The system of claim **30**, wherein said device is disposable.

38. A system of continuously collecting blood plasma from a donor thereof, comprising processing means including means for ascertaining the initial volume of plasma in the donor based on donor specific data, conduit means defining a closed blood loop with the donor, said conduit means including separating means for continuously separating a portion of the plasma in the donor's blood flowing therethrough; pump means for circulating the blood from the donor through said separating means in the closed loop; means for introducing anticoagulant from a source thereof to said conduit means in an amount sufficient to maintain the anticoagulant concentration within a predetermined percentage range of the plasma concentration in the blood flowing into said separating means container, means coupled to said separating means for collecting plasma separated thereby; and measuring means coupled to said container means for determining the amount of plasma collected therein; said processing means including control means responsive to the amount of plasma collected fro deactivating said pump means and said anticoagulant introducing means when a predetermined percentage of the donor's plasma volume has been collected.

39. The system of claim **38**, wherein the donor specific data includes body weight and hematocrit.

40. The system of claim **38**, wherein said processing means includes microprocessor means operating under stored program control.

41. The system of claim **40**, and further comprising sensing means for ascertaining the pressures at the inputs of said pump means and said separating means, said processing means including means responsive to said sensing means for controlling the operation of said pump means and said anticoagulant introducing means.

42. The system of claim **41**, wherein said processing means includes means for maintaining the anticoagulant flow rate as a predetermined function of the plasma flow rate.

43. The system of claim **40**, wherein said stored program is menu driven, and further comprising display means coupled to said processing means for displaying menu messages and replies thereto, and input means coupled to said processing means for communicating thereto user replies to the menu messages.

44. The system of claim **38**, and further comprising input means coupled to said processing means for supplying the donor specific data thereto.

45. The system of claim **38**, wherein sadi conduit means is disposable.

46. The system of claim **38**, wherein the system has a total blood volume of less than 25 ml.

47. The system of claim **38**, and further comprising means for automatically calibrating said pump means.

48. The system of claim **38**, and further comprising means for automatically calibrating said measuring means.

* * * * *