PROVISIONAL APPLICATION FOR A UNITED STATES PATENT

UNITED STATES PATENT AND TRADEMARK OFFICE

Title: Safety Helmet with Device Mounts

Inventors: Shantanu Deshpande
Glenview, Illinois

Kingston Wong
Beach Park, IL

Assignee: Klein Tools, Inc.
450 Bond Street
Lincolnshire, IL 60069

DESCRIPTION OF DRAWINGS

[0003] FIG. 1 is a front top left perspective view of one embodiment of the invention.

[0004] FIG. 2 is a rear top right perspective view of the device shown in Fig. 1.

[0005] FIG. 3 is a left side view of the device shown in Fig 1.

[0006] FIG. 4 is a left side view of the device shown in Fig. 1 in an alternative configuration.

[0007] FIG. 5 is a partially exploded and partially rotated rear view of the device shown in Fig. 1.

[0008] Fig. 6 is a rear to right perspective view of the embodiment shown in Fig. 1 in an alternate configuration.

[0009] Fig. 7 is a rear to right perspective view of the embodiment shown in Fig. 1 in an alternate configuration.

BACKGROUND OF THE INVENTION

[0010] The present invention relates to the field of personal protection devices, particularly safety helmets. Various types of safety helmets are commonly used in in several industries, many of which include mounted personal illumination devices commonly called headlamps, typically powered by a direct current power source (either replaceable or rechargeable chemical cells). In the simplest of such devices, the headlamp is permanently mounted to the safety helmet in a fixed orientation at the front of the safety helmet. In other such devices, a mounting bracket is included at the front of the helmet to allow for a headlamp to be inserted. Accordingly, the concept of a forward-facing headlamp is well known in the prior art.

[0011] For a variety of reasons, it is common for typical users of safety helmets often choose to wear their safety helmets in a reverse orientation, with the brim facing rearward. The reverse orientation is often advantageous in situations requiring the user of the safety helmet to look upward unobstructed by the brim of the helmet or simply to increase the user's field of vision. This reverse orientation of a safety helmet is so commonly employed that several standard-promulgating organizations, including ANSI and CSA, require that helmets be safety tested in both standard and reverse orientation. Unfortunately, a standard helmet with a fixed or mounted headlamp does not provide illumination for the user in reverse orientation.

[0012] Another common method of mounting portable devices, including headlamps, onto a safety helmet is by using an elastic band to conform and adhere to the exterior of the safety helmet, and then mounting the portable device onto the elastic band. With this implementation it is possible to reverse the band such that the device mount is over the rear of the safety helmet, but switching between standard and reverse orientations is difficult. Further, band-type mounting systems are prone to slipping off of safety helmets and require periodic adjustment to prevent them from falling off of the safety helmet.

[0013] One benefit of the present invention allows a user to use the same portable device or headlamp with a safety helmet in both standard and reverse safety helmet orientation. A secondary use of the present invention is to allow a user to quickly remove and reinstall a device on the opposite side of the safety helmet when the safety

helmet is used in standard or reverse orientation, preserving the function of any attached device or devices. A third benefit of the present invention is to allow for the use and transport of multiple devices on the same safety helmet.

DETAILED DESCRIPTION

[0014] The exemplary embodiments described herein in accordance with the disclosure are applicable to safety helmets that are suitable for use with portable devices through the systems and method in accordance with the disclosure, but may be applicable to any type of headware and personal devices in a multitude of applications.

[0015] Fig. 1 depicts one aspect of the present invention, a safety helmet 100 featuring a detachable mounted headlamp device 200. The safety helmet 100 features a hard outer shell 1 designed to protect the head of the wearer from injury, and a brim 7 designed to shield the user's eyes from sunlight or falling debris. Venting holes 8 may be present for ventilation of the interior of the safety helmet 100 for the user's comfort, and accessory slots 6 may be present to accept various accessories. The headlamp 200 features a headlamp body 9, a light source 2, a power switch 3 to activate the light source 2, and an mounting bracket 4 to removably attach the headlamp 200 to the safety helmet 100, via a front tapered receiver slot 5 disposed on the front of the hard outer shell 1 of the safety helmet 100. In this configuration, the light emanating from the light source 2 projects forward from the safety helmet 100, illuminating the area in front of a user when the safety helmet is in its standard orientation, with the brim 7 over the wearer's face.

[0016] Fig. 2 depicts the rear side of the device in Fig. 1, a safety helmet 100 featuring a detachable mounted headlamp device 200 mounted via the mounting bracket 4 in a rear tapered receiver slot 11 substantially identical to the front tapered receiver slot 5 disposed on the hard outer shell 1 of the safety helmet 100. In this configuration, the light emanating from the light source 2 projects rearward of the safety helmet 100, illuminating the area in front of a user when the safety helmet is in its reverse orientation, with the brim 7 behind the wearer's head.

[0017] Fig. 3 depicts a side view of the device in Fig. 1, a safety helmet 100 featuring a detachable mounted headlamp device 200 mounted via the mounting bracket 4 in the front tapered receiver slot 5 on the hard outer shell 1 of the safety helmet 100. In this configuration, the light emanating from the light source 2 projects forward of the safety helmet 100, illuminating the area in front of a user when the safety helmet is in its reverse orientation, with the brim 7 above the wearer's face. The rear tapered receiver

slot 11 can be seen in this view, oppositely disposed on the hard outer shell 1 from the front tapered receiver slot 5.

[0018] Fig. 4 depicts a side view of the device in Fig. 1, a safety helmet 100 with a front tapered receiver slot 5 and a rear tapered receiver slot 11 oppositely disposed on hard outer shell 1 of the safety helmet 100. In this view a second headlamp device 201 is mounted via a second mounting bracket 10 to the rear tapered receiver slot 11, while the headlamp device 200 is mounted via the mounting bracket 4 to the front tapered receiver slot 5. In this configuration, the safety helmet 100, headlamp device 200, and second headlamp device 201 can be used in various ways. Both the headlamp device 200 and the second headlamp device 201 could be powered on, such that the light source 2 illuminates the area in front of the user and a second light source 12 illuminates the area behind the user's head while the cap is in its standard orientation. Alternately, the light source 2 on the headlamp device 200 might be powered on illuminating the area in front of the user while the safety helmet 100 is in its standard orientation, with the brim 7 above the user's face, and if the user chooses to move the helmet to its reverse orientation, with the brim 7 behind the user's face, the light source 2 could be powered down by means of pressing the power switch 3 and the second light source 12 powered on by pushing the second power switch 13 on the second headlamp device 201, such that the second light source 12 illuminates the area in front of the user. The user might also store the second headlamp device 201 on the rear tapered receiver slot 11 as a backup to the headlamp device 200 on the front tapered receiver slot 11, switching the position of the headlamp device 200 and second headlamp device 201 as necessary to address a malfunction or low battery state of the headlamp device 200. If the headlamp device 200 and the second headlamp device 201 have a high and low setting for the light source 2 and the second light source 12, a user can quickly configure the safety helmet 100 such that in the standard orientation the light source 2 provides bright illumination while the second light source 12 provides only low brightness to allow for signaling and location of the wearer, and may be converted when in reverse orientation such that the second light source 12 provides bright illumination while the light source 2 provides only low brightness to allow for signaling and location

of the wearer, without having to remove or reposition either the headlamp device 200 or the second headlamp device 201.

[0019] Fig. 5 depicts a rear view of the device in Fig. 1, the safety helmet 100 featuring the detachable mounted headlamp device 200 mounted on the front mounting bracket (not shown) on the hard outer shell 1 of the safety helmet 100. A battery pack 14 is mounted via a battery pack interface surface 15 onto the rear tapered receiver slot 11 on the hard outer shell 1 of the safety helmet. If necessary, the battery pack 14 can be electrically connected to the headlamp device 200 or any other device in the front tapered receiver slot 5 by means of a built in or external cable (not shown).

[0020] Fig. 6 depicts a rear view of the device in Fig. 1, the safety helmet 100 featuring the detachable mounted headlamp device 200 mounted on the front mounting bracket (not shown) on the hard outer shell 1 of the safety helmet 100. A speaker device 15 is mounted via a speaker device interface surface 15 onto the rear tapered receiver slot 11 on the hard outer shell 1 of the safety helmet. If necessary, the speaker device can be connected to an audio player (not shown) or a similar device by means of a built in or external cable (not shown).

[0021] Fig. 7 details the mounting bracket 4 and front tapered receiver slot 5 of the instant device. The front tapered receiver slot 5 includes a tapered channel 16 formed between a pair of raised sidewalls 18 and a protruding nub 17 extending from the surface of the hard outer shell 1 of the safety helmet device 100. The mounting bracket 4 is in the form of a tapered clip 19 conforming to the tapered channel 16 such that it is retained by the raised sidewalls 18 when it is inserted into the tapered channel. A slot 20 in the tapered clip 19 receives the protruding nub 17 on the hard outer shell 1 of the safety helmet device 100 locking it into place. The mounting bracket 4 can be detached from the front tapered receiver slot 5 by pulling on the release lever 21 of the tapered clip 19, which disengages the protruding nub 17 from the slot 20 to allow the headlamp device 200 to be lifted out of the tapered channel 16. The rear tapered receiver slot 11 is of substantially identical design to allow for devices to be stored interchangeable between the front tapered receiver slot 5 and the rear tapered receiver slot 11.

[0022] All references, including publications, patent applications, and patents, cited herein are hereby incorporated by reference to the same extent as if each reference

were individually and specifically indicated to be incorporated by reference and were set forth in its entirety herein.

[0023] The use of the terms “a” and “an” and “the” and “at least one” and similar referents in the context of describing the disclosure (especially in the context of the following claims) are to be construed to cover both the singular and the plural, unless otherwise indicated herein or clearly contradicted by context. The use of the term “at least one” followed by a list of one or more items (for example, “at least one of A and B”) is to be construed to mean one item selected from the listed items (A or B) or any combination of two or more of the listed items (A and B), unless otherwise indicated herein or clearly contradicted by context. The terms “comprising,” “having,” “including,” and “containing” are to be construed as open-ended terms (i.e., meaning “including, but not limited to,”) unless otherwise noted. Recitation of ranges of values herein are merely intended to serve as a shorthand method of referring individually to each separate value falling within the range, unless otherwise indicated herein, and each separate value is incorporated into the specification as if it were individually recited herein. All methods described herein can be performed in any suitable order unless otherwise indicated herein or otherwise clearly contradicted by context. The use of any and all examples, or exemplary language (e.g., “such as”) provided herein, is intended merely to better illuminate the disclosure and does not pose a limitation on the scope of the disclosure unless otherwise claimed. No language in the specification should be construed as indicating any non-claimed element as essential to the practice of the disclosure.

[0024] Preferred embodiments of this disclosure are described herein, including the best mode known to the inventors for carrying out the disclosure. Variations of those preferred embodiments may become apparent to those of ordinary skill in the art upon reading the foregoing description. The inventors expect skilled artisans to employ such variations as appropriate, and the inventors intend for the disclosure to be practiced otherwise than as specifically described herein. Accordingly, this disclosure includes all modifications and equivalents of the subject matter recited in the claims appended hereto as permitted by applicable law. Moreover, any combination of the above-

described elements in all possible variations thereof is encompassed by the disclosure unless otherwise indicated herein or otherwise clearly contradicted by context.

ABSTRACT

[0001] The disclosed device is a safety helmet with mounting points for portable devices, wherein the mounting points for portable devices allow for devices to be mounted interchangeably at forward or rearward points on the safety helmet, to allow for use of the safety helmet in both a standard orientation and a reverse orientation, and to allow for easy conversion of the safety helmet between standard orientation and reverse orientation.

DRAWINGS

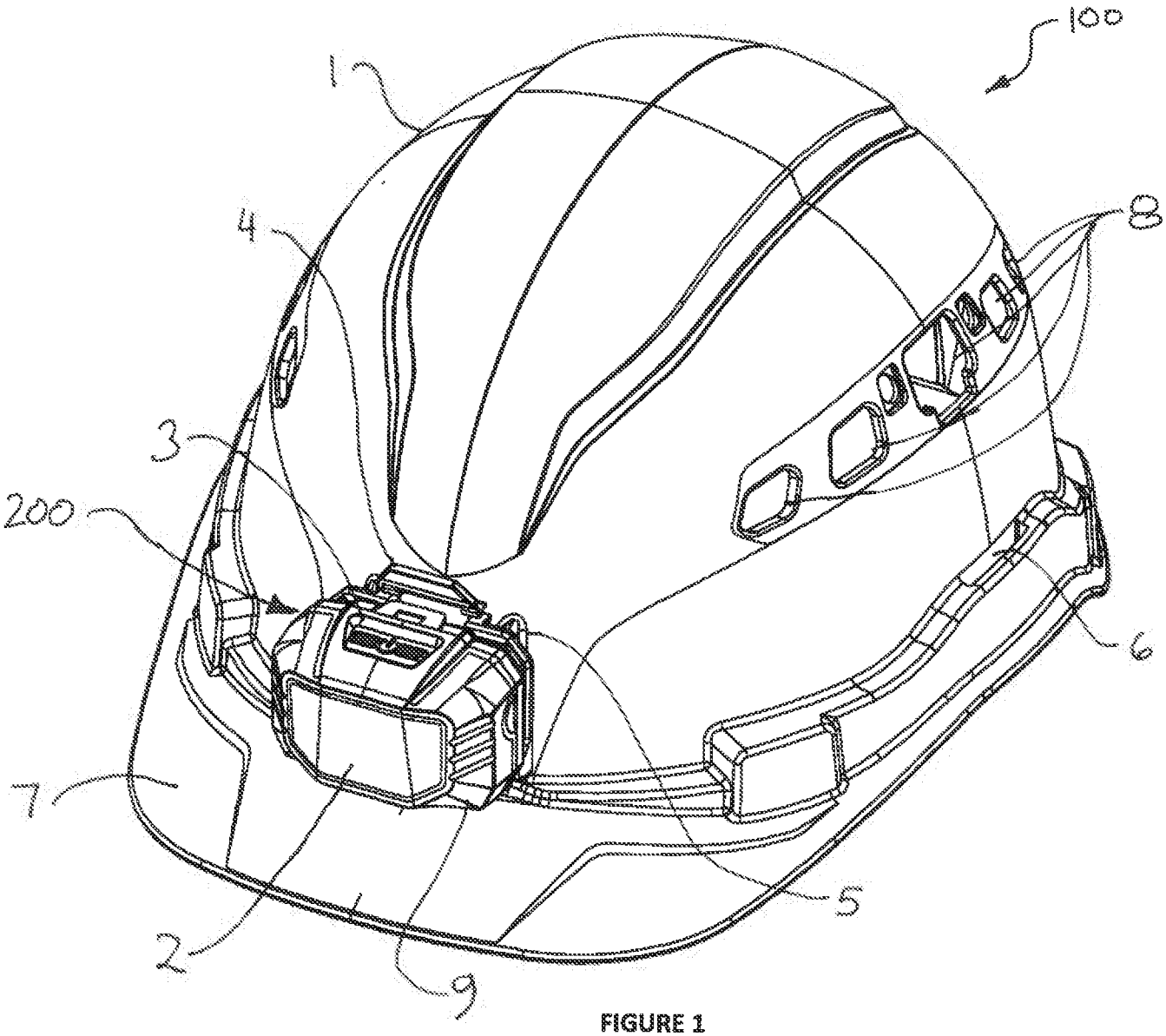

FIGURE 1

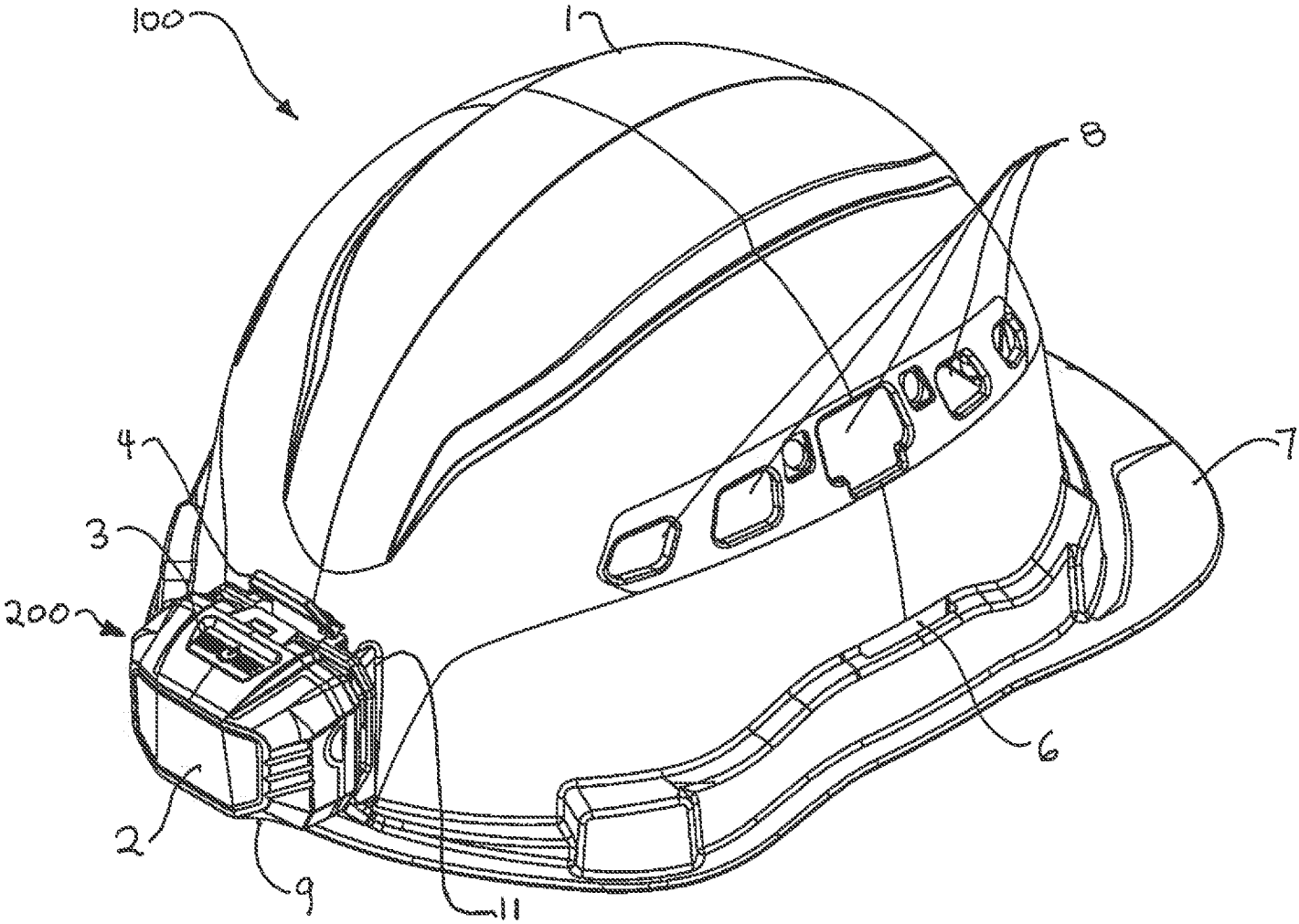

FIGURE 2

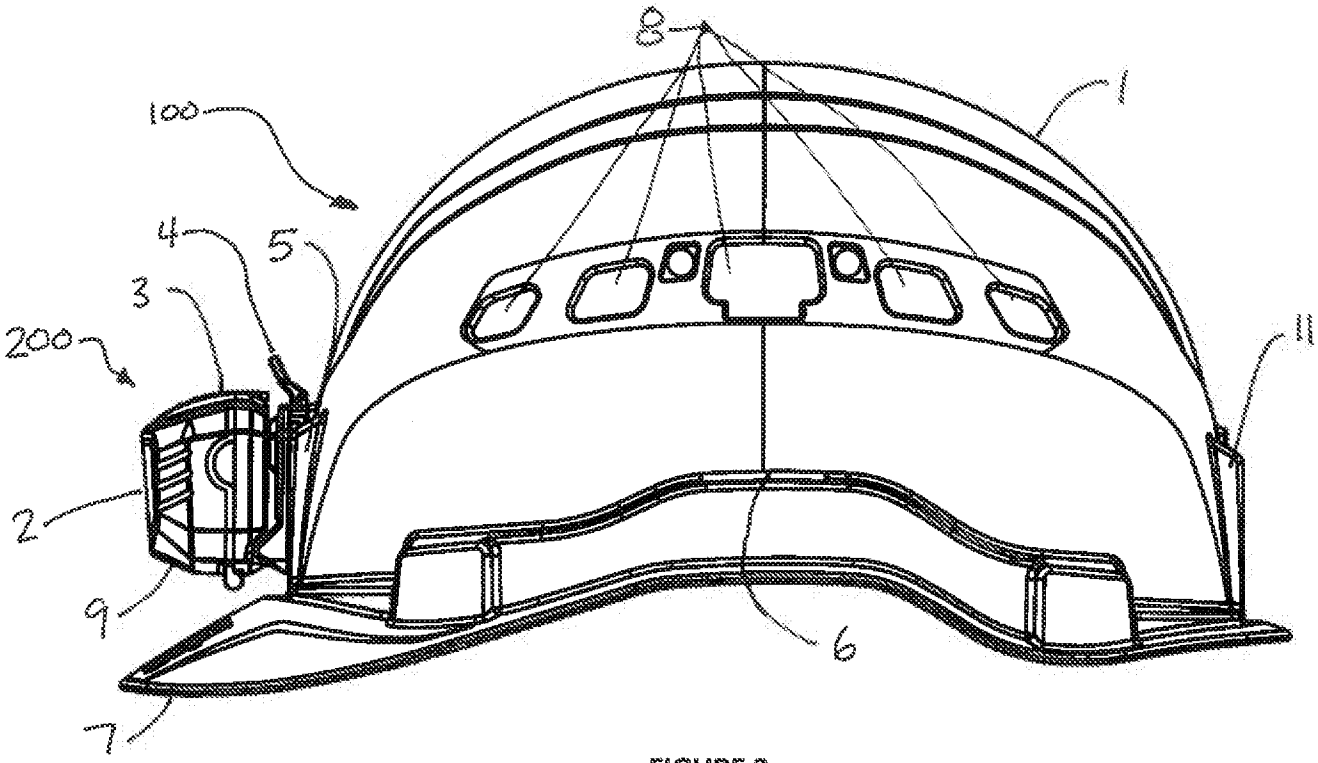

FIGURE 3

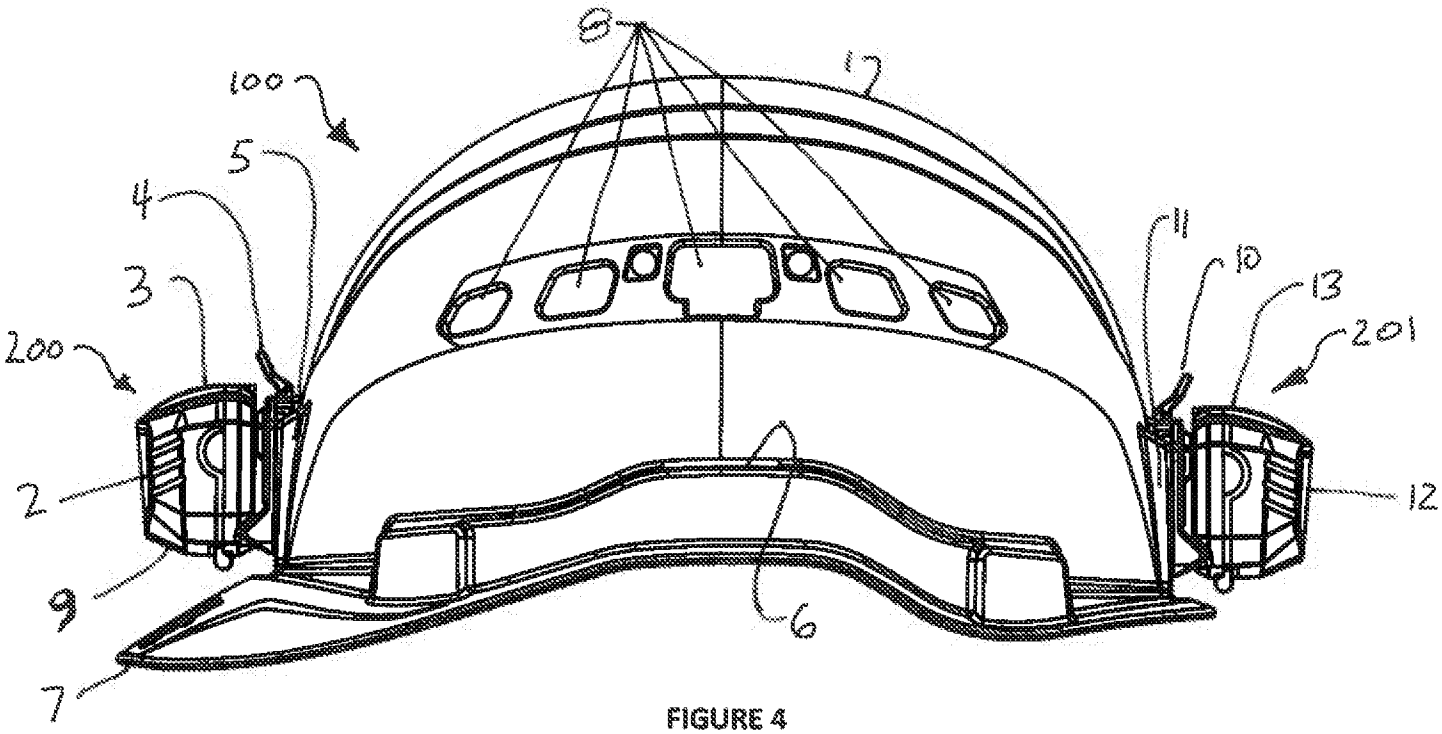

FIGURE 4

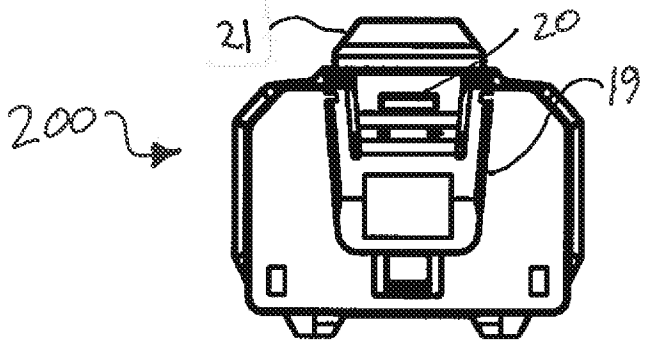

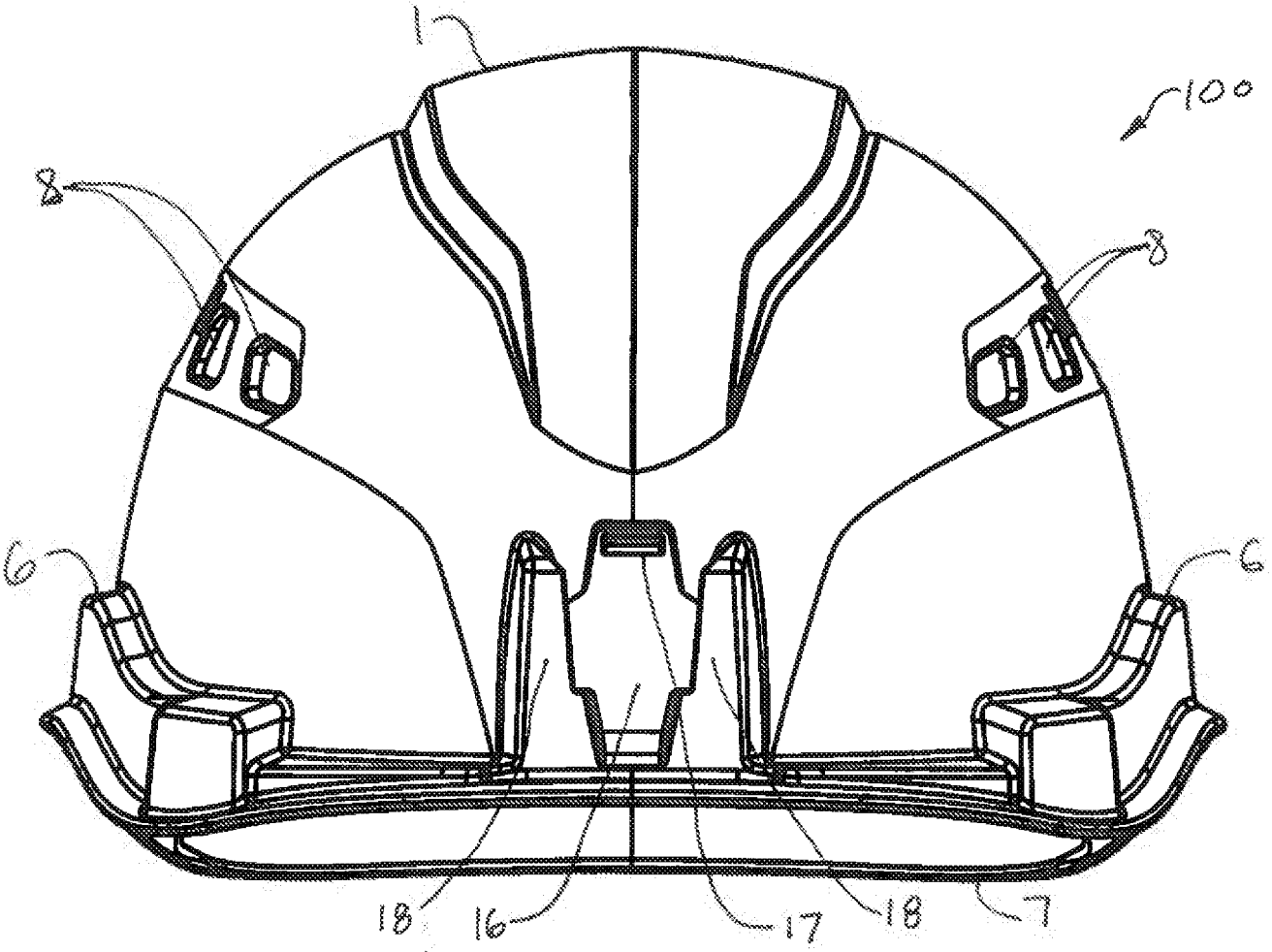

FIGURE 5

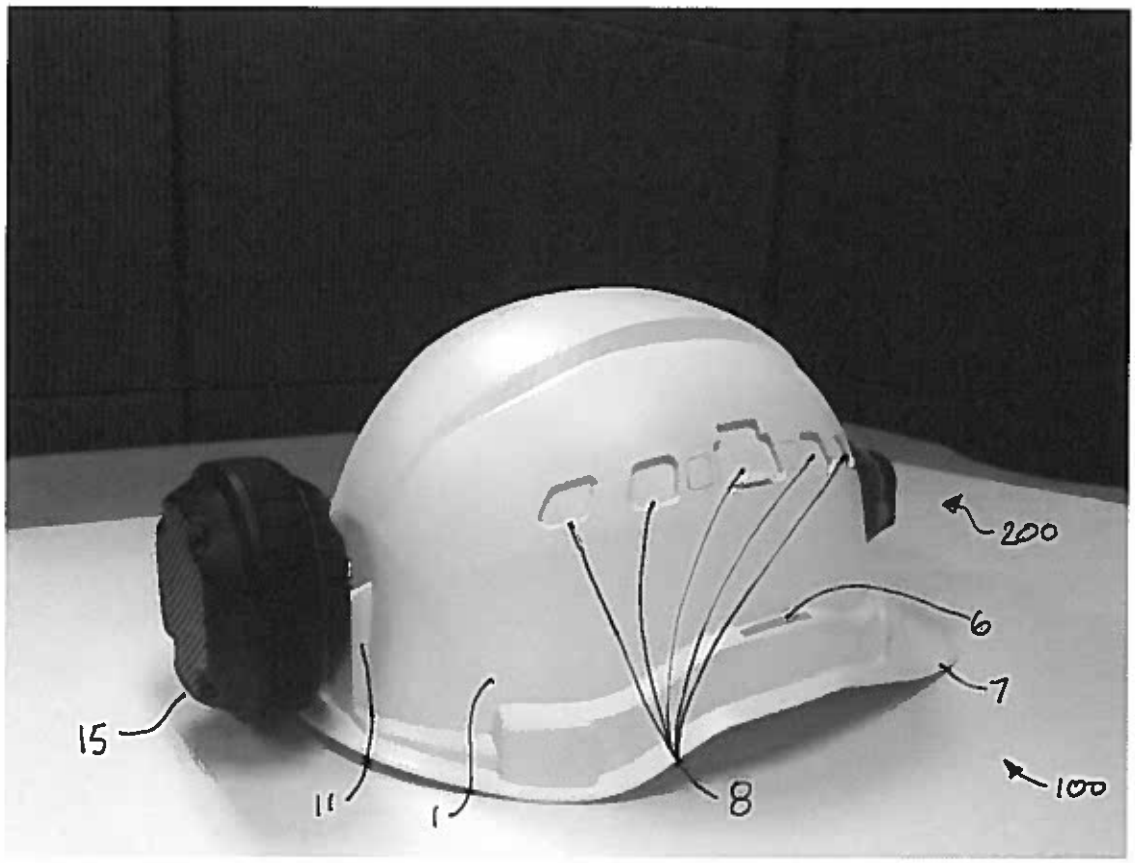

FIGURE 6

FIGURE 1

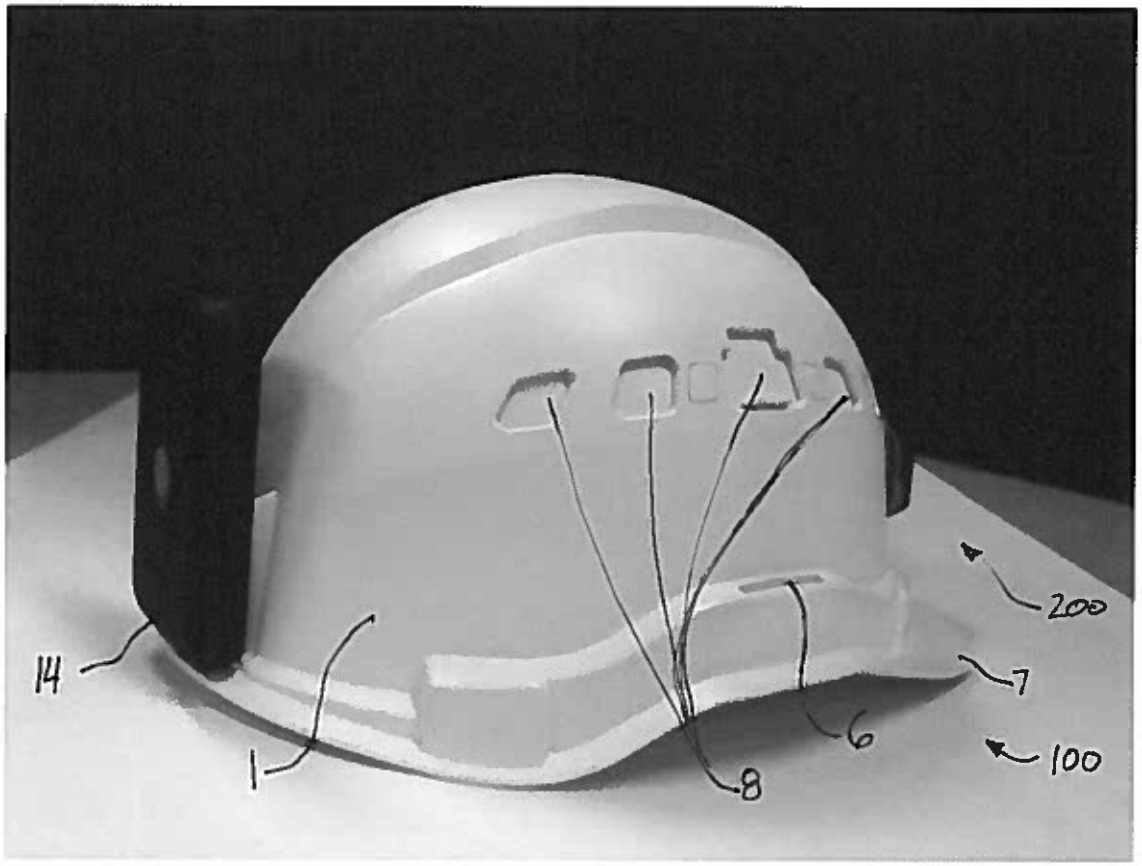

FIGURE 7