PTO/AIA/82A (07-13)
Approved for use through 03/31/2021. OMB 0651-0035
U.S. Patent and Trademark Office; U.S. DEPARTMENT OF COMMERCE
Under the Paperwork Reduction Act of 1995, no persons are required to respond to a collection of information unless it displays a valid OMB control number.

TRANSMITTAL FOR POWER OF ATTORNEY TO ONE OR MORE REGISTERED PRACTITIONERS

NOTE: This form is to be submitted with the Power of Attorney by Applicant form (PTO/AIA/82B) to identify the application to which the Power of Attorney is directed, in accordance with 37 CFR 1.5, unless the application number and filing date are identified in the Power of Attorney by Applicant form. If neither form PTO/AIA/82A nor form PTO/AIA82B identifies the application to which the Power of Attorney is directed, the Power of Attorney will not be recognized in the application.

Application Number	Continuation of U.S. 16/246,935
Filing Date	Herewith
First Named Inventor	Shantanu Deshpande
Title	SAFETY HELMET
Art Unit	Unassigned
Examiner Name	Unassigned
Attorney Docket Number	763379

SIGNATURE of Applicant or Patent Practitioner

Signature	/Elias P. Soupos/	Date (Optional)	
Name	Elias P. Soupos	Registration Number	57,375
Title (if Applicant is a juristic entity)	Attorney For Applicant		
Applicant Name (if Applicant is a juristic entity)	Klein Tools, Inc.		

NOTE: This form must be signed in accordance with 37 CFR 1.33. See 37 CFR 1.4(d) for signature requirements and certifications. If more than one applicant, use multiple forms.

☑ *Total of 1 forms are submitted.

This collection of information is required by 37 CFR 1.131, 1.32, and 1.33. The information is required to obtain or retain a benefit by the public which is to file (and by the USPTO to process) an application. Confidentiality is governed by 35 U.S.C. 122 and 37 CFR 1.11 and 1.14. This collection is estimated to take 3 minutes to complete, including gathering, preparing, and submitting the completed application form to the USPTO. Time will vary depending upon the individual case. Any comments on the amount of time you require to complete this form and/or suggestions for reducing this burden, should be sent to the Chief Information Officer, U.S. Patent and Trademark Office, U.S. Department of Commerce, P.O. Box 1450, Alexandria, VA 22313-1450. DO NOT SEND FEES OR COMPLETED FORMS TO THIS ADDRESS. **SEND TO: Commissioner for Patents, P.O. Box 1450, Alexandria, VA 22313-1450.**

If you need assistance in completing the form, call 1-800-PTO-9199 and select option 2.

Doc Code: PA..
Document Description: Power of Attorney

PTO/AIA/82B (07-13)
Approved for use through 11/30/2014. OMB 0651-0031
U.S. Patent and Trademark Office; U.S. DEPARTMENT OF COMMERCE
Under the Paperwork Reduction Act of 1995, no persons are required to respond to a collection of information unless it displays a valid OMB control number

POWER OF ATTORNEY BY APPLICANT

I hereby revoke all previous powers of attorney given in the application identified in either the attached transmittal letter or the boxes below.

Application Number	Filing Date

(Note: The boxes above may be left blank if information is provided on form PTO/AIA/82A.)

☑ I hereby appoint the Patent Practitioner(s) associated with the following Customer Number as my/our attorney(s) or agent(s), and to transact all business in the United States Patent and Trademark Office connected therewith for the application referenced in the attached transmittal letter (form PTO/AIA/82A) or identified above: 23460

OR

☐ I hereby appoint Practitioner(s) named in the attached list (form PTO/AIA/82C) as my/our attorney(s) or agent(s), and to transact all business in the United States Patent and Trademark Office connected therewith for the patent application referenced in the attached transmittal letter (form PTO/AIA/82A) or identified above. (Note: Complete form PTO/AIA/82C.)

Please recognize or change the correspondence address for the application identified in the attached transmittal letter or the boxes above to:

☑ The address associated with the above-mentioned Customer Number

OR

☐ The address associated with Customer Number:

OR

Firm or Individual Name					
Address					
City		State		Zip	
Country					
Telephone		Email			

I am the Applicant (if the Applicant is a juristic entity, list the Applicant name in the box):

Klein Tools, Inc.

☐ Inventor or Joint Inventor (title not required below)

☐ Legal Representative of a Deceased or Legally Incapacitated Inventor (title not required below)

☑ Assignee or Person to Whom the Inventor is Under an Obligation to Assign (provide signer's title if applicant is a juristic entity)

☐ Person Who Otherwise Shows Sufficient Proprietary Interest (e.g., a petition under 37 CFR 1.46(b)(2) was granted in the application or is concurrently being filed with this document) (provide signer's title if applicant is a juristic entity)

SIGNATURE of Applicant for Patent

The undersigned (whose title is supplied below) is authorized to act on behalf of the applicant (e.g., where the applicant is a juristic entity).

Signature		Date (Optional)	
Name	Matthew Thornton		
Title	VP Finance		

NOTE: Signature - This form must be signed by the applicant in accordance with 37 CFR 1.33. See 37 CFR 1.4 for signature requirements and certifications. If more than one applicant, use multiple forms.

☑ Total of 1 forms are submitted.

This collection of information is required by 37 CFR 1.131, 1.32, and 1.33. The information is required to obtain or retain a benefit by the public which is to file (and by the USPTO to process) an application. Confidentiality is governed by 35 U.S.C. 122 and 37 CFR 1.11 and 1.14. This collection is estimated to take 3 minutes to complete, including gathering, preparing, and submitting the completed application form to the USPTO. Time will vary depending upon the individual case. Any comments on the amount of time you require to complete this form and/or suggestions for reducing this burden, should be sent to the Chief Information Officer, U.S. Patent and Trademark Office, U.S. Department of Commerce, P.O. Box 1450, Alexandria, VA 22313-1450. DO NOT SEND FEES OR COMPLETED FORMS TO THIS ADDRESS. SEND TO: Commissioner for Patents, P.O. Box 1450, Alexandria, VA 22313-1450.

If you need assistance in completing the form, call 1-800-PTO-9199 and select option 2.

Electronic Patent Application Fee Transmittal

Application Number:	
Filing Date:	
Title of Invention:	SAFETY HELMET
First Named Inventor/Applicant Name:	Shantanu Deshpande
Filer:	Salim A. Hasan/Judith Goldberg
Attorney Docket Number:	763379

Filed as Large Entity

Filing Fees for Utility under 35 USC 111(a)

Description	Fee Code	Quantity	Amount	Sub-Total in USD($)
Basic Filing:				
UTILITY APPLICATION FILING	1011	1	320	320
UTILITY SEARCH FEE	1111	1	700	700
UTILITY EXAMINATION FEE	1311	1	800	800
Pages:				
Claims:				
Miscellaneous-Filing:				
Petition:				
Patent-Appeals-and-Interference:				

Description	Fee Code	Quantity	Amount	Sub-Total in USD($)
Post-Allowance-and-Post-Issuance:				
Extension-of-Time:				
Miscellaneous:				
			Total in USD ($)	**1820**

Electronic Acknowledgement Receipt

EFS ID:	46105241
Application Number:	17856628
International Application Number:	
Confirmation Number:	4418
Title of Invention:	SAFETY HELMET
First Named Inventor/Applicant Name:	Shantanu Deshpande
Customer Number:	23460
Filer:	Salim A. Hasan/Judith Goldberg
Filer Authorized By:	Salim A. Hasan
Attorney Docket Number:	763379
Receipt Date:	01-JUL-2022
Filing Date:	
Time Stamp:	17:10:17
Application Type:	Utility under 35 USC 111(a)

Payment information:

Submitted with Payment	yes
Payment Type	DA
Payment was successfully received in RAM	$1820
RAM confirmation Number	E202271H10402484
Deposit Account	
Authorized User	

The Director of the USPTO is hereby authorized to charge indicated fees and credit any overpayment as follows:

File Listing:

Document Number	Document Description	File Name	File Size(Bytes)/ Message Digest	Multi Part /.zip	Pages (if appl.)
1	Transmittal of New Application	ApplicationTransmittal-Utility.pdf	127323 6e2010afdaf5dfe2e4bb1b12bdb61c36ae8fc388	no	2
Warnings:					
Information:					
2	Application Data Sheet	ADS.pdf	1914289 db0e1bdd89b0c98573192715752c2f4231f4bdc9	no	9
Warnings:					
Information:					
3		Application.pdf	101217 f2a0dc303f8edf30657290ec5601fb72ab4679ec	yes	16

Multipart Description/PDF files in .zip description

Document Description	Start	End
Specification	1	11
Claims	12	15
Abstract	16	16

Document Number	Document Description	File Name	File Size(Bytes)/ Message Digest	Multi Part /.zip	Pages (if appl.)
Warnings:					
Information:					
4	Oath or Declaration filed	Declaration-Deshpande.pdf	152163 a784515bdf11b4774f47c7442a26fcb9370a059d	no	1
Warnings:					
Information:					
5	Oath or Declaration filed	Declaration-Wong.pdf	103343 b1acfc84603c92bc5abb89d9d2f5d638ea656107	no	1

Warnings:					
Information:					
6	Power of Attorney	POA.pdf	245693 5ba5f754e7f5a971a1f839a8dd6aea66e8bf6b2d	no	2
Warnings:					
Information:					
7	Fee Worksheet (SB06)	fee-info.pdf	44093 70f1e872addb9f92e2b8c79d26004e86aedeb1ae	no	2
Warnings:					
Information:					
		Total Files Size (in bytes):	2688121		

This Acknowledgement Receipt evidences receipt on the noted date by the USPTO of the indicated documents, characterized by the applicant, and including page counts, where applicable. It serves as evidence of receipt similar to a Post Card, as described in MPEP 503.

<u>New Applications Under 35 U.S.C. 111</u>
If a new application is being filed and the application includes the necessary components for a filing date (see 37 CFR 1.53(b)-(d) and MPEP 506), a Filing Receipt (37 CFR 1.54) will be issued in due course and the date shown on this Acknowledgement Receipt will establish the filing date of the application.
<u>National Stage of an International Application under 35 U.S.C. 371</u>
If a timely submission to enter the national stage of an international application is compliant with the conditions of 35 U.S.C. 371 and other applicable requirements a Form PCT/DO/EO/903 indicating acceptance of the application as a national stage submission under 35 U.S.C. 371 will be issued in addition to the Filing Receipt, in due course.
<u>New International Application Filed with the USPTO as a Receiving Office</u>
If a new international application is being filed and the international application includes the necessary components for an international filing date (see PCT Article 11 and MPEP 1810), a Notification of the International Application Number and of the International Filing Date (Form PCT/RO/105) will be issued in due course, subject to prescriptions concerning national security, and the date shown on this Acknowledgement Receipt will establish the international filing date of the application.

UTILITY PATENT APPLICATION TRANSMITTAL (Only for new nonprovisional applications under 37 CFR 1.53(b))	Attorney Docket No.	763379
	First Inventor	Shantanu Deshpande
	Title	SAFETY HELMET

APPLICATION ELEMENTS

ADDRESS TO: Commissioner for Patents
P.O. Box 1450
Alexandria, VA 22313-1450

1. ☒ Utility Patent Application Transmittal Form
2. ☐ Applicant asserts small entity status (37 CFR 1.27)
3. ☐ Applicant certifies micro entity status (37 CFR 1.29 – Form PTO/SB/15A or B must be submitted)
4. ☒ Specification (including claims and abstract) [Total Pages 16]
5. ☒ Drawings [Total Sheets 10]
6. ☒ Inventor Declaration(s) [Total Pages 2]
   a. ☐ Newly executed
   b. ☒ Copy from prior application
7. ☒ Application Data Sheet. See 37 CFR 1.76
8. ☐ CD-ROM or CD-R (Large Table or Computer Program (Appendix))
9. Nucleotide and/or Amino Acid Sequence Submission
   a. ☐ Computer Readable Form (CRF)
   b. Specification Sequence Listing on:
      i. ☐ CD-ROM or CD-R (2 copies); or
      ii. ☐ Paper Copy
   c. ☐ Statement verifying identity of above copies

ACCOMPANYING APPLICATION PARTS

10. ☐ Applicant requests early publication (include publication fee under 37 CFR 1.18(d))
11. ☐ 37 CFR 3.73(c) Statement (when there is an Assignee)
12. ☒ Power of Attorney
13. ☐ English Translation Document (if applicable)
14. ☐ Information Disclosure Statement (IDS)
    ☐ Form PTO-1449
    ☐ Copies of References (except for U.S. patents and applications)
15. ☐ Preliminary Amendment
16. ☐ Return Receipt Postcard (should be specifically itemized)
17. ☐ Certified Copy of Priority Document(s)
18. ☐ Nonpublication Request Under 35 USC 122(b)(2)(B)(i) (Form PTO/SB/35 or its equivalent must be submitted with this application)
19. ☐ Other:

APPLICATION FEES

BASIC FILING FEE						$320
UTILITY SEARCH FEE						$700
UTILITY EXAMINATION FEE						$800
CLAIM FEE	NUMBER FILED			NUMBER EXTRA	RATE	
TOTAL	20	MINUS	20	= 0	x $100 =	$0
INDEPENDENT	3	MINUS	3	= 0	x $480 =	$0
☐	FIRST PRESENTATION OF MULTIPLY DEPENDENT CLAIM				+ $860 =	$0
☐	Application Size Fee – If the specification, claims, abstract, drawings, and preliminary amendment exceed 100 sheets of paper, enter number of sheets here: - If application is filed in paper form, enter this number in Total Sheets below. - If application is filed via EFS-Web, multiply this number by 0.75 and enter result in Total Sheets below.					
Total Sheets =	– 100 =		÷ 50 =	(round **up** to a whole number)	x 420 =	$0
☐	Early Publication Fee					$0
☐	Processing Fee for Late Filing of Inventor Declarations					$0
SUBTOTAL (of all items above)						$1820
☐	Small Entity Status – Fees Above Are Reduced by ½					($0)
☐	Small Entity Status – BASIC FILING FEE is reduced by an additional $80 if EFS filing					($0)
☐	Micro Entity Status – Fees Above Are Reduced by ¾					($0)
TOTAL AMOUNT TO BE CHARGED TO DEPOSIT ACCOUNT						**$1820**

UTILITY PATENT APPLICATION TRANSMITTAL	Attorney Docket No. 763379

20. ☒ Please charge Deposit Account No. 12-1216 in the amount indicated above.

21. The Commissioner is hereby authorized to credit overpayments or charge any additional fees of the following types to Deposit Account No. 12-1216:
    a. ☐ Fees required under 37 CFR 1.16.
    b. ☐ Fees required under 37 CFR 1.17.

22. ☒ The Commissioner is hereby generally authorized under 37 CFR 1.136(a)(3) to treat any future reply in this or any related application filed pursuant to 37 CFR 1.53 requiring an extension of time as incorporating a request therefor, and the Commissioner is hereby specifically authorized to charge Deposit Account No. 12-1216 for any fee that may be due in connection with such a request for an extension of time.

CORRESPONDENCE ADDRESS

☒ Customer No. 23460

Name	Elias P. Soupos, Reg. No. 57,375
Signature	/Elias P. Soupos/
Contact Information	Leydig Telephone: 312-616-5600 Facsimile: 312-616-5700
Date	July 1, 2022

Under the Paperwork Reduction Act of 1995, no persons are required to respond to a collection of information unless it contains a valid OMB control number.

Application Data Sheet 37 CFR 1.76	Attorney Docket Number	763379
	Application Number	
Title of Invention	SAFETY HELMET	

The application data sheet is part of the provisional or nonprovisional application for which it is being submitted. The following form contains the bibliographic data arranged in a format specified by the United States Patent and Trademark Office as outlined in 37 CFR 1.76.
This document may be completed electronically and submitted to the Office in electronic format using the Electronic Filing System (EFS) or the document may be printed and included in a paper filed application.

Secrecy Order 37 CFR 5.2:

☐ Portions or all of the application associated with this Application Data Sheet may fall under a Secrecy Order pursuant to 37 CFR 5.2 (Paper filers only. Applications that fall under Secrecy Order may not be filed electronically.)

Inventor Information:

Inventor 1 Remove

Legal Name

Prefix	Given Name	Middle Name	Family Name	Suffix
	Shantanu		Deshpande	

Residence Information (Select One) ● US Residency Non US Residency Active US Military Service

City	Glenview	State/Province	IL	Country of Residence i	US

Mailing Address of Inventor:

Address 1	4311 Crescent Lane		
Address 2			
City	Glenview	State/Province	IL
Postal Code	60026	Country i	US

Inventor 2 Remove

Legal Name

Prefix	Given Name	Middle Name	Family Name	Suffix
	Kingston		Wong	

Residence Information (Select One) ◉ US Residency Non US Residency Active US Military Service

City	Beach Park	State/Province	IL	Country of Residence i	US

Mailing Address of Inventor:

Address 1	12970 W. Wakefield Dr.		
Address 2			
City	Beach Park	State/Province	IL
Postal Code	60083	Country i	US

All Inventors Must Be Listed - Additional Inventor Information blocks may be generated within this form by selecting the **Add** button. Add

Correspondence Information:

Enter either Customer Number or complete the Correspondence Information section below.
For further information see 37 CFR 1.33(a).

Under the Paperwork Reduction Act of 1995, no persons are required to respond to a collection of information unless it contains a valid OMB control number.

Application Data Sheet 37 CFR 1.76	Attorney Docket Number	763379
	Application Number	
Title of Invention	SAFETY HELMET	

☐ **An Address is being provided for the correspondence Information of this application.**

Customer Number	23460		
Email Address	docketingpatent@leydig.com	Add Email	Remove Email

Application Information:

Title of the Invention	SAFETY HELMET		
Attorney Docket Number	763379	**Small Entity Status Claimed**	☐
Application Type	Nonprovisional		
Subject Matter	Utility		
Total Number of Drawing Sheets (if any)	10	**Suggested Figure for Publication (if any)**	1

Filing By Reference:

Only complete this section when filing an application by reference under 35 U.S.C. 111(c) and 37 CFR 1.57(a). Do not complete this section if application papers including a specification and any drawings are being filed. Any domestic benefit or foreign priority information must be provided in the appropriate section(s) below (i.e., "Domestic Benefit/National Stage Information" and "Foreign Priority Information").

For the purposes of a filing date under 37 CFR 1.53(b), the description and any drawings of the present application are replaced by this reference to the previously filed application, subject to conditions and requirements of 37 CFR 1.57(a).

Application number of the previously filed application	Filing date (YYYY-MM-DD)	Intellectual Property Authority or Country

Publication Information:

☐ Request Early Publication (Fee required at time of Request 37 CFR 1.219)

☐ **Request Not to Publish.** I hereby request that the attached application not be published under 35 U.S.C. 122(b) and certify that the invention disclosed in the attached application **has not and will not** be the subject of an application filed in another country, or under a multilateral international agreement, that requires publication at eighteen months after filing.

Representative Information:

Representative information should be provided for all practitioners having a power of attorney in the application. Providing this information in the Application Data Sheet does not constitute a power of attorney in the application (see 37 CFR 1.32).
Either enter Customer Number or complete the Representative Name section below. If both sections are completed the customer Number will be used for the Representative Information during processing.

Please Select One:	● Customer Number	US Patent Practitioner	○ Limited Recognition (37 CFR 11.9)
Customer Number	23460		

Under the Paperwork Reduction Act of 1995, no persons are required to respond to a collection of information unless it contains a valid OMB control number.

Application Data Sheet 37 CFR 1.76	Attorney Docket Number	763379
	Application Number	
Title of Invention	SAFETY HELMET	

Domestic Benefit/National Stage Information:

This section allows for the applicant to either claim benefit under 35 U.S.C. 119(e), 120, 121, 365(c), or 386(c) or indicate National Stage entry from a PCT application. Providing benefit claim information in the Application Data Sheet constitutes the specific reference required by 35 U.S.C. 119(e) or 120, and 37 CFR 1.78.
When referring to the current application, please leave the "Application Number" field blank.

Prior Application Status	Pending		Remove
Application Number	Continuity Type	Prior Application Number	Filing or 371(c) Date (YYYY-MM-DD)
	Continuation of	16/246935	2019-01-14
Prior Application Status	Pending		Remove
Application Number	Continuity Type	Prior Application Number	Filing or 371(c) Date (YYYY-MM-DD)
16/246935	Claims benefit of provisional	62/622472	2018-01-26
Prior Application Status	Expired		Remove
Application Number	Continuity Type	Prior Application Number	Filing or 371(c) Date (YYYY-MM-DD)
16/246935	Claims benefit of provisional	62/645491	2018-03-20

Additional Domestic Benefit/National Stage Data may be generated within this form by selecting the **Add** button. Add

Foreign Priority Information:

This section allows for the applicant to claim priority to a foreign application. Providing this information in the application data sheet constitutes the claim for priority as required by 35 U.S.C. 119(b) and 37 CFR 1.55. When priority is claimed to a foreign application that is eligible for retrieval under the priority document exchange program (PDX)[i] the information will be used by the Office to automatically attempt retrieval pursuant to 37 CFR 1.55(i)(1) and (2). Under the PDX program, applicant bears the ultimate responsibility for ensuring that a copy of the foreign application is received by the Office from the participating foreign intellectual property office, or a certified copy of the foreign priority application is filed, within the time period specified in 37 CFR 1.55(g)(1).

Remove

Application Number	Country[i]	Filing Date (YYYY-MM-DD)	Access Code[i] (if applicable)

Additional Foreign Priority Data may be generated within this form by selecting the **Add** button. Add

Statement under 37 CFR 1.55 or 1.78 for AIA (First Inventor to File) Transition Applications

Under the Paperwork Reduction Act of 1995, no persons are required to respond to a collection of information unless it contains a valid OMB control number.

Application Data Sheet 37 CFR 1.76	Attorney Docket Number	763379
	Application Number	
Title of Invention	SAFETY HELMET	

☐ This application (1) claims priority to or the benefit of an application filed before March 16, 2013 and (2) also contains, or contained at any time, a claim to a claimed invention that has an effective filing date on or after March 16, 2013.
NOTE: By providing this statement under 37 CFR 1.55 or 1.78, this application, with a filing date on or after March 16, 2013, will be examined under the first inventor to file provisions of the AIA.

Application Data Sheet 37 CFR 1.76	Attorney Docket Number	763379
	Application Number	
Title of Invention	SAFETY HELMET	

Authorization or Opt-Out of Authorization to Permit Access:

When this Application Data Sheet is properly signed and filed with the application, applicant has provided written authority to permit a participating foreign intellectual property (IP) office access to the instant application-as-filed (see paragraph A in subsection 1 below) and the European Patent Office (EPO) access to any search results from the instant application (see paragraph B in subsection 1 below).

Should applicant choose not to provide an authorization identified in subsection 1 below, applicant **must opt-out** of the authorization by checking the corresponding box A or B or both in subsection 2 below.

NOTE: This section of the Application Data Sheet is **ONLY** reviewed and processed with the **INITIAL** filing of an application. After the initial filing of an application, an Application Data Sheet cannot be used to provide or rescind authorization for access by a foreign IP office(s). Instead, Form PTO/SB/39 or PTO/SB/69 must be used as appropriate.

1. Authorization to Permit Access by a Foreign Intellectual Property Office(s)

A. Priority Document Exchange (PDX) - Unless box A in subsection 2 (opt-out of authorization) is checked, the undersigned hereby **grants the USPTO authority** to provide the European Patent Office (EPO), the Japan Patent Office (JPO), the Korean Intellectual Property Office (KIPO), the State Intellectual Property Office of the People's Republic of China (SIPO), the World Intellectual Property Organization (WIPO), and any other foreign intellectual property office participating with the USPTO in a bilateral or multilateral priority document exchange agreement in which a foreign application claiming priority to the instant patent application is filed, access to: (1) the instant patent application-as-filed and its related bibliographic data, (2) any foreign or domestic application to which priority or benefit is claimed by the instant application and its related bibliographic data, and (3) the date of filing of this Authorization. See 37 CFR 1.14(h)(1).

B. Search Results from U.S. Application to EPO - Unless box B in subsection 2 (opt-out of authorization) is checked, the undersigned hereby **grants the USPTO authority** to provide the EPO access to the bibliographic data and search results from the instant patent application when a European patent application claiming priority to the instant patent application is filed. See 37 CFR 1.14(h)(2).

The applicant is reminded that the EPO's Rule 141(1) EPC (European Patent Convention) requires applicants to submit a copy of search results from the instant application without delay in a European patent application that claims priority to the instant application.

2. Opt-Out of Authorizations to Permit Access by a Foreign Intellectual Property Office(s)

☐ A. Applicant **DOES NOT** authorize the USPTO to permit a participating foreign IP office access to the instant application-as-filed. If this box is checked, the USPTO will not be providing a participating foreign IP office with any documents and information identified in subsection 1A above.

☐ B. Applicant **DOES NOT** authorize the USPTO to transmit to the EPO any search results from the instant patent application. If this box is checked, the USPTO will not be providing the EPO with search results from the instant application.

NOTE: Once the application has published or is otherwise publicly available, the USPTO may provide access to the application in accordance with 37 CFR 1.14.

Under the Paperwork Reduction Act of 1995, no persons are required to respond to a collection of information unless it contains a valid OMB control number.

Application Data Sheet 37 CFR 1.76	Attorney Docket Number	763379
	Application Number	
Title of Invention	SAFETY HELMET	

Applicant Information:

Providing assignment information in this section does not substitute for compliance with any requirement of part 3 of Title 37 of CFR to have an assignment recorded by the Office.

Applicant 1 Remove

If the applicant is the inventor (or the remaining joint inventor or inventors under 37 CFR 1.45), this section should not be completed. The information to be provided in this section is the name and address of the legal representative who is the applicant under 37 CFR 1.43; or the name and address of the assignee, person to whom the inventor is under an obligation to assign the invention, or person who otherwise shows sufficient proprietary interest in the matter who is the applicant under 37 CFR 1.46. If the applicant is an applicant under 37 CFR 1.46 (assignee, person to whom the inventor is obligated to assign, or person who otherwise shows sufficient proprietary interest) together with one or more joint inventors, then the joint inventor or inventors who are also the applicant should be identified in this section.

Clear

● Assignee	Legal Representative under 35 U.S.C. 117	Joint Inventor
Person to whom the inventor is obligated to assign.	Person who shows sufficient proprietary interest	

If applicant is the legal representative, indicate the authority to file the patent application, the inventor is:

Name of the Deceased or Legally Incapacitated Inventor:

If the Applicant is an Organization check here. ☒

Organization Name	Klein Tools, Inc.		
Mailing Address Information For Applicant:			
Address 1	450 Bond Street		
Address 2			
City	Lincolnshire	**State/Province**	IL
Country	US	Postal Code	60069
Phone Number		Fax Number	
Email Address			

Additional Applicant Data may be generated within this form by selecting the Add button. Add

Assignee Information including Non-Applicant Assignee Information:

Providing assignment information in this section does not substitute for compliance with any requirement of part 3 of Title 37 of CFR to have an assignment recorded by the Office.

Under the Paperwork Reduction Act of 1995, no persons are required to respond to a collection of information unless it contains a valid OMB control number.

Application Data Sheet 37 CFR 1.76	Attorney Docket Number	763379
	Application Number	
Title of Invention	SAFETY HELMET	

Assignee 1

Complete this section if assignee information, including non-applicant assignee information, is desired to be included on the patent application publication. An assignee-applicant identified in the "Applicant Information" section will appear on the patent application publication as an applicant. For an assignee-applicant, complete this section only if identification as an assignee is also desired on the patent application publication.

Remove

If the Assignee or Non-Applicant Assignee is an Organization check here. ☒

Organization Name	Klein Tools, Inc.

Mailing Address Information For Assignee including Non-Applicant Assignee:

Address 1	450 Bond Street		
Address 2			
City	Lincolnshire	**State/Province**	IL
Country i	US	Postal Code	60069
Phone Number		Fax Number	
Email Address			

Additional Assignee or Non-Applicant Assignee Data may be generated within this form by selecting the Add button. Add

Signature:

Remove

NOTE: This Application Data Sheet must be signed in accordance with 37 CFR 1.33(b). **However, if this Application Data Sheet is submitted with the INITIAL filing of the application and either box A or B is not checked in subsection 2 of the "Authorization or Opt-Out of Authorization to Permit Access" section, then this form must also be signed in accordance with 37 CFR 1.14(c).**

This Application Data Sheet **must** be signed by a patent practitioner if one or more of the applicants is a **juristic entity** (e.g., corporation or association). If the applicant is two or more joint inventors, this form must be signed by a patent practitioner, **all** joint inventors who are the applicant, or one or more joint inventor-applicants who have been given power of attorney (e.g., see USPTO Form PTO/AIA/81) on behalf of **all** joint inventor-applicants.

See 37 CFR 1.4(d) for the manner of making signatures and certifications.

Signature	/Elias P. Soupos/			Date (YYYY-MM-DD)	2022-07-01
First Name	Elias P.	Last Name	Soupos	Registration Number	57375

Additional Signature may be generated within this form by selecting the Add button. Add

Under the Paperwork Reduction Act of 1995, no persons are required to respond to a collection of information unless it contains a valid OMB control number.

Application Data Sheet 37 CFR 1.76	Attorney Docket Number	763379
	Application Number	
Title of Invention	SAFETY HELMET	

This collection of information is required by 37 CFR 1.76. The information is required to obtain or retain a benefit by the public which is to file (and by the USPTO to process) an application. Confidentiality is governed by 35 U.S.C. 122 and 37 CFR 1.14. This collection is estimated to take 23 minutes to complete, including gathering, preparing, and submitting the completed application data sheet form to the USPTO. Time will vary depending upon the individual case. Any comments on the amount of time you require to complete this form and/or suggestions for reducing this burden, should be sent to the Chief Information Officer, U.S. Patent and Trademark Office, U.S. Department of Commerce, P.O. Box 1450, Alexandria, VA 22313-1450. DO NOT SEND FEES OR COMPLETED FORMS TO THIS ADDRESS. **SEND TO: Commissioner for Patents, P.O. Box 1450, Alexandria, VA 22313-1450.**

Privacy Act Statement

The Privacy Act of 1974 (P.L. 93-579) requires that you be given certain information in connection with your submission of the attached form related to a patent application or patent. Accordingly, pursuant to the requirements of the Act, please be advised that: (1) the general authority for the collection of this information is 35 U.S.C. 2(b)(2); (2) furnishing of the information solicited is voluntary; and (3) the principal purpose for which the information is used by the U.S. Patent and Trademark Office is to process and/or examine your submission related to a patent application or patent. If you do not furnish the requested information, the U.S. Patent and Trademark Office may not be able to process and/or examine your submission, which may result in termination of proceedings or abandonment of the application or expiration of the patent.

The information provided by you in this form will be subject to the following routine uses:

1 The information on this form will be treated confidentially to the extent allowed under the Freedom of Information Act (5 U.S.C. 552) and the Privacy Act (5 U.S.C. 552a). Records from this system of records may be disclosed to the Department of Justice to determine whether the Freedom of Information Act requires disclosure of these records.

2. A record from this system of records may be disclosed, as a routine use, in the course of presenting evidence to a court, magistrate, or administrative tribunal, including disclosures to opposing counsel in the course of settlement negotiations.

3 A record in this system of records may be disclosed, as a routine use, to a Member of Congress submitting a request involving an individual, to whom the record pertains, when the individual has requested assistance from the Member with respect to the subject matter of the record.

4. A record in this system of records may be disclosed, as a routine use, to a contractor of the Agency having need for the information in order to perform a contract. Recipients of information shall be required to comply with the requirements of the Privacy Act of 1974, as amended, pursuant to 5 U.S.C. 552a(m).

5. A record related to an International Application filed under the Patent Cooperation Treaty in this system of records may be disclosed, as a routine use, to the International Bureau of the World Intellectual Property Organization, pursuant to the Patent CooperationTreaty.

6. A record in this system of records may be disclosed, as a routine use, to another federal agency for purposes of National Security review (35 U.S.C. 181) and for review pursuant to the Atomic Energy Act (42 U.S.C. 218(c)).

7. A record from this system of records may be disclosed, as a routine use, to the Administrator, General Services, or his/her designee, during an inspection of records conducted by GSA as part of that agency's responsibility to recommend improvements in records management practices and programs, under authority of 44 U.S.C. 2904 and 2906. Such disclosure shall be made in accordance with the GSA regulations governing inspection of records for this purpose, and any other relevant (i.e., GSA or Commerce) directive. Such disclosure shall not be used to make determinations about individuals.

8. A record from this system of records may be disclosed, as a routine use, to the public after either publication of the application pursuant to 35 U.S.C. 122(b) or issuance of a patent pursuant to 35 U.S.C. 151. Further, a record may be disclosed, subject to the limitations of 37 CFR 1.14, as a routine use, to the public if the record was filed in an application which became abandoned or in which the proceedings were terminated and which application is referenced by either a published application, an application open to public inspections or an issued patent.

9. A record from this system of records may be disclosed, as a routine use, to a Federal, State, or local law enforcement agency, if the USPTO becomes aware of a violation or potential violation of law or regulation.

SAFETY HELMET

CROSS-REFERENCE TO RELATED APPLICATIONS

[0001] This patent application is a continuation of U.S. Patent Application No. 16/246,935, filed January 14, 2019, which claims the benefit of U.S. Provisional Application No. 62/622,472, filed January 26, 2018, and U.S. Provisional Application No. 62/645,491, filed March 20, 2018, each of which disclosure is incorporated herein by reference.

BACKGROUND OF THE DISCLOSURE

[0002] The present disclosure relates to personal protection devices and, more particularly, safety helmets for use to protect the wearer from falling objects. Such helmets are commonly also referred to as “hard hats.” Various types of safety helmets are commonly used in in several industries, many of which include mounted personal illumination devices commonly called headlamps, typically powered by a direct current power source (either replaceable or rechargeable chemical cells). In the simplest of such devices, the headlamp is permanently mounted to the safety helmet in a fixed orientation at the front of the safety helmet. In other such devices, a mounting bracket is included at the front of the helmet to allow for a headlamp to be inserted.

[0003] One common method of mounting headlamps onto a safety helmet is by using an elastic band to conform and adhere to the exterior of the safety helmet, and then mounting the portable device onto the elastic band. While use of elastic bands can permit mounting of the headlamp at any orientation relative to the safety helmet, and also mounting of additional devices onto a single band, switching between orientations is difficult. Moreover, band-type mounting systems are prone to slipping off from the safety helmet, especially when lubricating fluids may fall on the helmet and enter the interface between the helmet’s exterior and the band, thus requiring constant readjustment by the user.

[0004] Another common issue with known safety helmet headlamp arrangements is the connection of a power source to the headlamp. Portable power sources such as batteries are known to be heavy and bulky. When integrated with the headlamp, which is worn on the front facing side of the helmet, headlamps with integrated

power sources tend to pull the helmet down, especially when the wearer is looking down. To reduce the weight of headlamps, manufacturers decrease the size of the batteries that are integrated therewith, which also decreases their useful life and will also decrease the lumen output of the headlamp. In certain applications where long life and higher light intensity is desired such as in underground mines, headlamps are typically connected to a power source via a wire, which leads to heavier and bulkier batteries worn around the user's waist. The wire leading to the batteries, however, can present a nuisance to the user and also increases the chances of unsafe conditions as it may become snagged as the user is moving around.

BRIEF SUMMARY OF THE DISCLOSURE

[0005] In one aspect, the present disclosure describes a safety helmet. The safety helmet includes an outer shell adapted to be worn by a user. The outer shell has a front side and a rear side, wherein the outer shell is reversible such that one of the front side or the rear side is oriented above a face of the user when the outer shell is worn by the user. A front receptacle is disposed on the front side of the outer shell, and a rear receptacle is disposed on the rear side of the outer shell. The front receptacle and the rear receptacle are of identical construction. An accessory device has a mating receptacle formed thereon, and is releasably mountable onto each of the front receptacle and the rear receptacle of the outer shell.

[0006] In another aspect, the disclosure describes a safety helmet, which includes an outer shell adapted to be worn by a user. The outer shell has a front side and a rear side. The outer shell is reversible such that one of the front side or the rear side is oriented above a face of the user when the outer shell is worn by the user. A front receptacle is disposed on the front side of the outer shell, and a rear receptacle is disposed on the rear side of the outer shell. A first accessory device has a first mating receptacle formed thereon and is releasably mountable onto each of the front receptacle or the rear receptacle of the outer shell, and a second accessory device has a second mating receptacle formed thereon and is releasably mountable onto each of the front receptacle or the rear receptacle of the outer shell.

[0007] In yet another aspect, the disclosure describes a safety helmet that includes an outer shell adapted to be worn by a user and having a front side and a rear side. The outer shell is reversible such that one of the front side or the rear side

is oriented above a face of the user when the outer shell is worn by the user. The safety helmet further includes a front receptacle disposed on the front side of the outer shell, and a rear receptacle disposed on the rear side of the outer shell. The front receptacle includes a front set of terminals associated therewith, the rear receptacle includes a rear set of terminals associated therewith, and a set of conductors is connected between the front set of terminals and the rear set of terminals.

[0008] In yet another aspect, the disclosure describes a method for using a protective device. The method includes providing an outer shell adapted to be worn by a user, the outer shell having a front side and a rear side, wherein the outer shell is reversible such that the front side or the rear side is oriented above a face of the user when the user wears the outer shell. The method further includes providing a front receptacle disposed on the front side of the outer shell, and providing a rear receptacle disposed on the rear side of the outer shell. The method also includes releasably attaching an accessory device having a mating receptacle formed thereon into one of the front or rear receptacle, detaching the accessory device, and reattaching the accessory device into another one of the front or rear receptacle.

BRIEF SUMMARY OF THE SEVERAL VIEWS OF THE DRAWINGS

[0009] FIGS. 1 and 2 are front and rear perspective views of a safety helmet in accordance with the disclosure.

[0010] FIG. 3 is a front view of the safety helmet of FIG. 1.

[0011] FIG. 4 is a rear view of a device that is connectable to the safety helmet of FIG. 1 in accordance with the disclosure.

[0012] FIG. 5 is a cross section of the safety helmet of FIG. 1.

[0013] FIG. 6 is an enlarged detail cross section of the helmet of FIG. 1.

[0014] FIG. 7 is a side view of an alternative embodiment.

[0014.1] FIG. 8 is a cross section of the safety helmet of FIG. 1 in an alternate configuration.

[0014.2] FIG. 9 is a rear top right perspective view of the safety helmet of FIG. 1 in another configuration wherein an electronic device is releasably mounted on the rear of the safety helmet.

[0014.3] FIG. 10 is a left side view of the safety helmet shown in FIG. 9 in yet another configuration wherein the electronic device is releasably mounted on the front of the safety helmet.

[0014.4] FIG. 11 is a left side view of the safety helmet shown in FIG. 9 in an alternate configuration wherein one of the electronic devices is releasably mounted on the front of the safety helmet and another of the electronic devices is releasably mounted on the rear of the helmet.

[0014.5] FIG. 12 is a rear to right perspective view of the safety helmet shown in FIG. 9 in yet another alternate configuration wherein the electronic device is releasably mounted on the front of the safety helmet and a different type of electronic device is releasably mounted on the rear of the safety helmet.

[0014.6] FIG. 13 is a is a rear to right perspective view of the embodiment shown in FIG. 9 in another alternate configuration wherein the electronic device is releasably mounted on the front of the safety helmet and another type of electronic device is releasably mounted on the rear of the safety helmet.

DETAILED DESCRIPTION OF A PREFERRED EMBODIMENT

[0015] The present invention relates to the field of personal protection devices and, more particularly, safety helmets. The safety helmets in accordance with the disclosure include two mounts, one on either the front or back facing sides of the helmet, which permit connection of removable modules onto the helmet such as headlamps, cameras, speakers, larger capacity batteries, cellphones, and the like. In one embodiment, the helmet includes an integrated, non-removable power source and integrated electrical leads or conductors to a port for a removable device. In this way, the removable device such as a headlamp can be made lighter without sacrificing battery power output or electrical potential. The headlamp, which may include its own power source that is chargeable by the helmet, may be removed and used as a flashlight before being replaced onto the helmet for charging.

[0016] A safety helmet 100 in accordance with one embodiment of the present disclosure is shown in FIG. 1. The safety helmet 100 includes a detachably mounted, headlamp device 200. The safety helmet 100 includes a hard outer shell 1 designed to protect the head of the wearer from injury and a brim 7 designed to shield the user’s eyes from sunlight or falling debris. Accessory slots 6 may be present to

accept various accessories. The headlamp device 200 features a headlamp body 9, a light source 2, a power switch 3 to activate the light source 2, and a mounting bracket 4 to removeably attach the headlamp device 200 to the safety helmet 100.

[0017] Connection of the headlamp device 200, which is shown as one exemplary embodiment of a device that can be connected to the safety helmet 100, is accomplished by releasable engagement of the mounting bracket 4 to a front tapered receiver slot 5 of the safety helmet 100. The front tapered receiver slot 5 is disposed on the front of hard outer shell 1 of the safety helmet 100. In this configuration, the light emanating from the light source 2 projects forward from the safety helmet 100, illuminating the area in front of a user when the safety helmet is in its standard orientation in which the brim 7 is disposed over the wearer's face.

[0018] The mounting bracket 4 and front tapered receiver slot 5 are one exemplary embodiment for releasably connecting the device 200 to the safety helmet 100. As also shown in FIGS. 3 and 4, the front tapered receiver slot 5 includes a tapered channel 16 formed between a pair of raised sidewalls 18 and a stop, shown in the preferred embodiment as a protruding nub 17 extending from the surface of the hard outer shell 1 of the safety helmet 100. The mounting bracket 4 is in the form of a tapered clip 19 conforming to the tapered channel 16 such that it is retained by the raised sidewalls 18 when it is inserted into the tapered channel. A slot 20 in the tapered clip 19 receives the protruding nub 17 on the hard outer shell 1 of the safety helmet 100 locking it into place. The mounting bracket 4 can be detached from the front tapered receiver slot 5 by pulling on the release lever 21 of the tapered clip 19, which disengages the protruding nub 17 from the slot 20 to allow the headlamp device 200 to be lifted out of the tapered channel 16.

[0019] The safety helmet 100 is shown from a rear perspective in FIG. 2. As shown, the safety helmet 100 includes a second device 201 mounted on the rear side of the hard outer shell 1. While in certain embodiments the second device 201 may be releasably mounted to the safety helmet 100 using a second tapered receiver slot, similar to the front tapered receiver slot 5 on the front of the helmet (FIG. 1), in the illustrated embodiment of FIG. 2, the second device 201 is non-releasably or, generally permanently, mounted onto the safety helmet 100. The second device shown in FIG. 2 is a battery pack or power storage device that houses disposable or rechargeable battery power cells. The battery cells in the

second device 201 are configured to provide electrical potential in the form of a direct current (DC) electrical power output into two conductors, 203 and 204 (shown in FIG. 1), which are integrated into the hard outer shell 1. As shown in FIGS. 7 and 9-13 in two alternative embodiments, the safety helmet 100 includes a rear tapered slot 11 that is substantially identical to the front tapered receiver slot 5.

[0020] The conductors 203 and 204, which are shown in dashed lines in FIGS. 1 and 2, are metal conductors that can be made from copper, aluminum, steel, zinc or the like, and are molded into the thermoplastic material of the hard outer shell 1 of the safety helmet 100. In one embodiment, the conductors can be placed into a mold used for injection molding of the hard outer shell 1 such that the plastic used to construct the hard outer shell 1 can be over-molded around the conductors to conceal and protect the conductors as shown, for example, in FIG. 6. Placement of the conductors can be selected depending on the particular safety requirements of the helmet. As shown, the conductors are placed along an outer region of the helmet, away from the wearer's head.

[0021] At one end, the conductors 203 and 204 are permanently and electrically connected to two poles of the battery cells in the second device 201 such that an electrical potential created by the battery cells is available through the conductors. At another end the conductors 203 and 204 terminate at terminals 205 and 206, as shown in FIG. 3, which present bare surfaces for achieving a releasable electrical connection with corresponding terminals 207 and 208 formed on the back side of the device 200 that is connectable to the front tapered receiver slot 5, as shown in FIG. 4. In this way, when the device 200 is mechanically connected to the receiver slot, an electrical connection between the first device, for example, the headlamp device 200 and the second device 201 is also established and maintained while the device 200 is mounted onto the safety helmet 100.

[0022] FIG. 5 a side, section view through the safety helmet 100 shown in FIG. 1, and FIG. 6 is an enlarged detail view to illustrate the connections of the electrical conductors through the material of the hard outer shell 1 to the terminals 207 and 208 (only one visible) and also to the additional device 201. Also visible here are secondary, rechargeable batteries 212 used within the device 200, which can be charged through the conductors from the second device 201 and which also allow the device 200 to be used autonomously, if desired. In the embodiment shown, the

rechargeable batteries 212 used in the device 200 have a smaller electrical capacity than batteries in the second device 201 to allow the device to be recharged while connected to the safety helmet 100, provided that the electrical potential of the second device 201 is higher than the device 200 and charging of the device 200 can occur. The recharging of the device 200 advantageously permits use of the device to be used autonomously when separated from the safety helmet 100, and then reconnected to the helmet for charging from the second device 201. While charging, the device 200 can also operate, for example, to provide light, by drawing sufficient electrical power from the second device to both operate and charge the device 200 because of the larger electrical capacity of the second device 201. When the second device 201 is connected to a power source for charging, and while the device 201 is connected, both devices can be charged simultaneously to increase to the total charge available on the safety helmet 100. Moreover, the second device 201 can include a shutoff or diode integrated therewith, which only permits flow of electrical power in the form of electrical DC current from the second device 201 to the device 200, but not in the opposite direction.

[0023] The devices 200 and 201 may be embodied as various types of devices or accessories. For example, in addition to headlamps or battery packs, the devices may be embodied as a speaker, which can be connected to an audio player or similar device by known methods, a holder or bracket for another device such as a camera, smartphone or the like, a blinking or otherwise illuminated light that marks the location of the user, a GPS receiver or tag, and the like.

[0024] A first alternative embodiment is shown in FIG. 7, in which a plurality of electrical devices, in this case, illumination devices 210, are integrated around the helmet and connected to be powered by the second device 201. For example, the illumination devices 210 may be low-powered LED lights or strobes that can be illuminated and used as safety devices, in addition to reflective devices, in low light environments. The electrical connections to power the illumination devices 210 can be integrated into the hard outer shell in a fashion similar to the conductors 203 and 204, and be electrically connected therewith. A headlamp device 200 is shown mounted via the mounting bracket 4 to the front tapered receiver slot 5 formed by the hard outer shell 1''. The second headlamp device 201 is mounted to a rear tapered

receiver slot 11 formed by the hard outer shell 1''. In this embodiment, the front tapered receiver slot 5 is substantially identical to the rear tapered receiver slot 1''.

[0024.1] FIG. 8 shows a cross section view through the safety helmet 100 shown in FIG. 1 in an alternate configuration. FIG. 8 shows the safety helmet 100 including the detachably mounted headlamp device 200. The headlamp device 200 includes the light source 2, the headlamp body 9, and the rechargeable batteries 212. The conductors 203 are shown integrated into the outer shell 1' and terminating at the terminal 205. The headlamp device 200 includes the terminal 207 for releasable electrical connection with terminal 205. The safety helmet 100 of Fig. 8 shows that the protruding nub 17 and the brim 7 are unitary features of the hard outer shell 1'. Stated in other words, the outer shell forms or defines the protruding nub 17 and the brim, which are integrally molded with the outer shell from a common material such as plastic. The venting holes 8 may be present for ventilation of the interior of the safety helmet 100. As shown in FIG. 3, the protruding nub 17 is centrally disposed relative to the external slot. In the illustrated embodiment of FIG. 3, the protruding nub 17 is disposed at an upward location away from the brim 7.

[0024.2] FIG. 9 shows a rear top right perspective view of the safety helmet 100 of FIG. 1 in an alternate configuration. The safety helmet features a detachable mounted headlamp device 200 mounted via the mounting bracket 4 in a rear tapered receiver slot 11 substantially identical to the front tapered receiver slot 5 disposed on the hard outer shell 1' of the safety helmet 100. In this configuration, the light emanating from the light source 2 projects rearward of the safety helmet 100, illuminating the area in front of a user when the safety helmet is in its reverse orientation, with the brim 7 behind the wearer's head.

[0024.3] FIG. 10 depicts a side view of the safety helmet 100 of FIG. 9, featuring the detachable mounted headlamp device 200 mounted via the mounting bracket 4 in the front tapered receiver slot 5 of the hard outer shell 1' of the safety helmet 100. In this configuration, the light emanating from the light source 2 projects forward of the safety helmet 100, illuminating the area in front of a user when the safety helmet is in its reverse orientation, with the brim 7 above the wearer's face. The rear tapered receiver slot 11 can be seen in this view, disposed on the hard outer shell 1' opposite from the front tapered receiver slot 5.

[0024.4] FIG. 11 depicts a side view of the safety helmet 100 of FIG. 9 with the front tapered receiver slot 5 and the rear tapered receiver slot 11 oppositely formed by the hard outer shell 1' of the safety helmet 100. In this view, a second headlamp device 201 is mounted via a second mounting bracket 10 to the rear tapered receiver slot 11, while the headlamp device 200 is mounted via the mounting bracket 4 to the front tapered receiver slot 5. In this configuration of the safety helmet 100, the headlamp device 200 and second headlamp device 201 can be used in various ways. Both the headlamp device 200 and the second headlamp device 201 could be powered on, such that the light source 2 illuminates the area in front of the user and a second light source 12 illuminates the area behind the user's head while the cap is in its standard orientation. Alternately, the light source 2 on the headlamp device 200 might be powered on illuminating the area in front of the user while the safety helmet 100 is in its standard orientation, with the brim 7 above the user's face, and if the user chooses to move the helmet to its reverse orientation, with the brim 7 behind the user's face, the light source 2 could be powered down by means of pressing the power switch 3 and the second light source 12 powered on by pushing the second power switch 13 on the second headlamp device 201, such that the second light source 12 illuminates the area in front of the user. The user might also store the second headlamp device 201 on the rear tapered receiver slot 11 as a backup to the headlamp device 200 on the front tapered receiver slot 11, switching the position of the headlamp device 200 and second headlamp device 201 as necessary, for example, to address a malfunction or low battery state of the headlamp device 200. If the headlamp device 200 and the second headlamp device 201 have a high and low setting for the light source 2 and the second light source 12, a user can quickly configure the safety helmet 100 such that in the standard orientation the light source 2 provides bright illumination while the second light source 12 provides only low brightness to allow for signaling and location of the wearer, and may be converted when in reverse orientation such that the second light source 12 provides bright illumination while the light source 2 provides only low brightness to allow for signaling and location of the wearer, without having to remove or reposition either the headlamp device 200 or the second headlamp device 201.

[0024.5] FIG. 12 shows the safety helmet 100 in a configuration with a speaker device 15 mounted to the receiver slot 11 and the headlamp device 200 mounted to

the receiver slot 5. FIG. 13 shows the safety helmet 100 in another configuration with a battery pack 14 mounted to the receiver slot 11 and the headlamp device 200 mounted to the receiver slot 5. As shown in FIGS. 12 and 13, the accessory slot(s) 6, the brim 7, the venting holes 8, and the receiver slot 11 are unitary features of the outer shell 1'. In other words, the outer shell 1' forms or defines the accessory slot(s) 6, the brim 7, the venting holes 8, and the receiver slot 11. The accessory slot(s) 6 are configured to accept various accessories. As shown in FIGS. 12 and 13, the accessory slot(s) 6 are integrated with the outer shell 1'. As shown in FIGS. 12 and 13, the brim 7 is integrated with the outer shell 1. As shown in FIGS. 12 and 13, the venting holes 8 are integrated with the outer shell 1'. As shown in FIGS. 12 and 13, the receiver slot 11 is integrated with the outer shell 1'.

[0025] All references, including publications, patent applications, and patents, cited herein are hereby incorporated by reference to the same extent as if each reference were individually and specifically indicated to be incorporated by reference and were set forth in its entirety herein.

[0026] The use of the terms "a" and "an" and "the" and "at least one" and similar referents in the context of describing the invention (especially in the context of the following claims) are to be construed to cover both the singular and the plural, unless otherwise indicated herein or clearly contradicted by context. The use of the term "at least one" followed by a list of one or more items (for example, "at least one of A and B") is to be construed to mean one item selected from the listed items (A or B) or any combination of two or more of the listed items (A and B), unless otherwise indicated herein or clearly contradicted by context. The terms "comprising," "having," "including," and "containing" are to be construed as open-ended terms (i.e., meaning "including, but not limited to,") unless otherwise noted. Recitation of ranges of values herein are merely intended to serve as a shorthand method of referring individually to each separate value falling within the range, unless otherwise indicated herein, and each separate value is incorporated into the specification as if it were individually recited herein. All methods described herein can be performed in any suitable order unless otherwise indicated herein or otherwise clearly contradicted by context. The use of any and all examples, or exemplary language (e.g., "such as") provided herein, is intended merely to better illuminate the invention and does not pose a limitation on the scope of the invention unless otherwise claimed. No

language in the specification should be construed as indicating any non-claimed element as essential to the practice of the invention.

[0027] Preferred embodiments of this invention are described herein, including the best mode known to the inventors for carrying out the invention. Variations of those preferred embodiments may become apparent to those of ordinary skill in the art upon reading the foregoing description. The inventors expect skilled artisans to employ such variations as appropriate, and the inventors intend for the invention to be practiced otherwise than as specifically described herein. Accordingly, this invention includes all modifications and equivalents of the subject matter recited in the claims appended hereto as permitted by applicable law. Moreover, any combination of the above-described elements in all possible variations thereof is encompassed by the invention unless otherwise indicated herein or otherwise clearly contradicted by context.

CLAIMS

What is claimed is:

1. A safety helmet, comprising:

an outer shell adapted to be worn by a user, the outer shell having a front side and a rear side, wherein the outer shell is reversible such that one of the front side or the rear side is oriented above a face of the user when the outer shell is worn by the user;

a front receptacle disposed on the front side of the outer shell;

a rear receptacle disposed on the rear side of the outer shell, wherein the front receptacle and the rear receptacle are of identical construction;

an accessory device having a mating receptacle formed thereon, the accessory device being releasably mountable onto each of the front receptacle and the rear receptacle of the outer shell.

2. The safety helmet of claim 1, wherein the front receptacle includes a receiver slot flanked by raised walls and including a stop, wherein the accessory device includes a spring tab with a pawl, and wherein the receiver slot aligns the accessory device therein, the raised walls retain the accessory device therebetween, and the pawl engages the stop to releasably mount the accessory device in the front receptacle.

3. The safety helmet of claim 1, wherein the outer shell is made from a molded plastic material.

4. A safety helmet, comprising:

an outer shell adapted to be worn by a user, the outer shell having a front side and a rear side, wherein the outer shell is reversible such that one of the front side or the rear side is oriented above a face of the user when the outer shell is worn by the user;

a front receptacle disposed on the front side of the outer shell;

a rear receptacle disposed on the rear side of the outer shell;

a first accessory device having a first mating receptacle formed thereon, the first accessory device being releasably mountable onto each of the front receptacle or the rear receptacle of the outer shell; and

a second accessory device having a second mating receptacle formed thereon, the second accessory device being releasably mountable onto each of the front receptacle or the rear receptacle of the outer shell.

5. The safety helmet of claim 4, wherein the front receptacle includes a receiver slot flanked by raised walls and including a stop, wherein the first accessory device includes a spring tab with a pawl, and wherein the receiver slot aligns the first accessory device therein, the raised walls retain the first accessory device therebetween, and the pawl engages the stop to releasably mount the first accessory device in the front receptacle.

6. The safety helmet of claim 4, wherein the outer shell is made from a molded plastic material.

7. A safety helmet, comprising:

an outer shell adapted to be worn by a user, the outer shell having a front side and a rear side, wherein the outer shell is reversible such that one of the front side or the rear side is oriented above a face of the user when the outer shell is worn by the user;

a front receptacle disposed on the front side of the outer shell;

a rear receptacle disposed on the rear side of the outer shell;

wherein the front receptacle includes a front set of terminals associated therewith, and the rear receptacle includes a rear set of terminals associated therewith; and

wherein a set of conductors is connected between the front set of terminals and the rear set of terminals.

8. The safety helmet of claim 7, wherein the set of conductors are integrated into the outer shell.

9. The safety helmet of claim 7, wherein the outer shell is made from a molded plastic material, and wherein the front set of terminals and the rear set of terminals are molded into the outer shell.

10. The safety helmet of claim 7, wherein a first accessory device is connected to the front receptacle and is a consumer of power, wherein a second accessory device is connected to the rear receptacle and is a power storage device, and wherein a circuit providing power from the second accessory device to the first accessory device is created while the first accessory device and the second accessory device are mounted onto the front receptacle and rear receptacles.

11. The safety helmet of claim 10, wherein each of the first accessory device and the second accessory device is a consumer of power a having power source integrated therewith.

12. The safety helmet of claim 11, wherein the power source of the first accessory device and the power source of the second accessory device are in electrical contact with one another to share power through the circuit.

13. The safety helmet of claim 10, where in the front receptacle and the rear receptacle are of identical construction.

14. A method for using a protective device, comprising:

providing an outer shell adapted to be worn by a user, the outer shell having a front side and a rear side, wherein the outer shell is reversible such that the front side or the rear side is oriented above a face of the user when the user wears the outer shell;

providing a front receptacle disposed on the front side of the outer shell;

providing a rear receptacle disposed on the rear side of the outer shell;

releasably attaching an accessory device having a mating receptacle formed thereon into one of the front receptacle or the rear receptacle; and

detaching the accessory device and reattaching the accessory device into another one of the front receptacle or the rear receptacle.

15. The method of claim 14, further comprising electrically interconnecting terminals associated with the front and rear receptacles using a set of conductors.

16. The method of claim 15, wherein the outer shell is made from a molded plastic material, and wherein the terminals are molded into the outer shell.

17. The method of claim 15, further comprising:

connecting an additional accessory device into the front or rear receptacles; and

transferring electrical power between the accessory device and the additional accessory device through the set of conductors.

18. The method of claim 17, wherein the accessory device is a lantern and wherein the additional accessory device includes one or more batteries.

19. The method of claim 15, wherein the set of conductors is molded into the outer shell.

20. The method of claim 14, where in the front receptacle and the rear receptacle are of identical construction.

ABSTRACT

A safety helmet includes an outer shell having a front receptacle disposed on a front side of the outer shell and a rear receptacle disposed on a rear side of the outer shell. A first accessory device having a first mating receptacle formed thereon is releasably mountable onto each of the front receptacle or the rear receptacle of the outer shell, and a second accessory device having a second mating receptacle formed thereon is releasably mountable onto each of the front receptacle or the rear receptacle of the outer shell.

PTO/AIA/01 (06-12)
Approved for use through 01/31/2014. OMB 0651-0032
U.S. Patent and Trademark Office; U.S. DEPARTMENT OF COMMERCE
Under the Paperwork Reduction Act of 1995, no persons are required to respond to a collection of information unless it displays a valid OMB control number.

DECLARATION (37 CFR 1.63) FOR UTILITY OR DESIGN APPLICATION USING AN APPLICATION DATA SHEET (37 CFR 1.76)

Title of Invention Safety Helmet

As the below named inventor, I hereby declare that:

This declaration is directed to:

☐ The attached application, or

☒ United States application or PCT international application number 16/246,935 filed on January 14, 2019.

The above-identified application was made or authorized to be made by me.

I believe that I am the original inventor or an original joint inventor of a claimed invention in the application.

I hereby acknowledge that any willful false statement made in this declaration is punishable under 18 U.S.C. 1001 by fine or imprisonment of not more than five (5) years, or both.

WARNING:

Petitioner/applicant is cautioned to avoid submitting personal information in documents filed in a patent application that may contribute to identity theft. Personal information such as social security numbers, bank account numbers, or credit card numbers (other than a check or credit card authorization form PTO-2038 submitted for payment purposes) is never required by the USPTO to support a petition or an application. If this type of personal information is included in documents submitted to the USPTO, petitioners/applicants should consider redacting such personal information from the documents before submitting them to the USPTO. Petitioner/applicant is advised that the record of a patent application is available to the public after publication of the application (unless a non-publication request in compliance with 37 CFR 1.213(a) is made in the application) or issuance of a patent. Furthermore, the record from an abandoned application may also be available to the public if the application is referenced in a published application or an issued patent (see 37 CFR 1.14). Checks and credit card authorization forms PTO-2038 submitted for payment purposes are not retained in the application file and therefore are not publicly available.

LEGAL NAME OF INVENTOR

Inventor: Shantanu Deshpande Date (Optional): 7/15/19

Signature: [signature]

Note: An application data sheet (PTO/SB/14 or equivalent), including naming the entire inventive entity, must accompany this form. Use an additional PTO/AIA/01 form for each additional inventor.

This collection of information is required by 35 U.S.C. 115 and 37 CFR 1.63. The information is required to obtain or retain a benefit by the public which is to file (and by the USPTO to process) an application. Confidentiality is governed by 35 U.S.C. 122 and 37 CFR 1.11 and 1.14. This collection is estimated to take 1 minute to complete, including gathering, preparing, and submitting the completed application form to the USPTO. Time will vary depending upon the individual case. Any comments on the amount of time you require to complete this form and/or suggestions for reducing this burden, should be sent to the Chief Information Officer, U.S. Patent and Trademark Office, U.S. Department of Commerce, P.O. Box 1450, Alexandria, VA 22313-1450. DO NOT SEND FEES OR COMPLETED FORMS TO THIS ADDRESS. **SEND TO: Commissioner for Patents, P.O. Box 1450, Alexandria, VA 22313-1450.**

If you need assistance in completing the form, call 1-800-PTO-9199 and select option 2.

PTO/AIA/01 (06-12)
Approved for use through 01/31/2014. OMB 0651-0032
U.S. Patent and Trademark Office; U.S. DEPARTMENT OF COMMERCE
Under the Paperwork Reduction Act of 1995, no persons are required to respond to a collection of information unless it displays a valid OMB control number.

DECLARATION (37 CFR 1.63) FOR UTILITY OR DESIGN APPLICATION USING AN APPLICATION DATA SHEET (37 CFR 1.76)

Title of Invention	Safety Helmet

As the below named inventor, I hereby declare that:

This declaration is directed to:

☐ The attached application, or

☒ United States application or PCT international application number 16/246,935 filed on January 14, 2019.

The above-identified application was made or authorized to be made by me.

I believe that I am the original inventor or an original joint inventor of a claimed invention in the application.

I hereby acknowledge that any willful false statement made in this declaration is punishable under 18 U.S.C. 1001 by fine or imprisonment of not more than five (5) years, or both.

WARNING:

Petitioner/applicant is cautioned to avoid submitting personal information in documents filed in a patent application that may contribute to identity theft. Personal information such as social security numbers, bank account numbers, or credit card numbers (other than a check or credit card authorization form PTO-2038 submitted for payment purposes) is never required by the USPTO to support a petition or an application. If this type of personal information is included in documents submitted to the USPTO, petitioners/applicants should consider redacting such personal information from the documents before submitting them to the USPTO. Petitioner/applicant is advised that the record of a patent application is available to the public after publication of the application (unless a non-publication request in compliance with 37 CFR 1.213(a) is made in the application) or issuance of a patent. Furthermore, the record from an abandoned application may also be available to the public if the application is referenced in a published application or an issued patent (see 37 CFR 1.14). Checks and credit card authorization forms PTO-2038 submitted for payment purposes are not retained in the application file and therefore are not publicly available.

LEGAL NAME OF INVENTOR

Inventor: Kingston Wong Date (Optional): 07/16/2019

Signature: [signature]

Note: An application data sheet (PTO/SB/14 or equivalent), including naming the entire inventive entity, must accompany this form. Use an additional PTO/AIA/01 form for each additional inventor.

This collection of information is required by 35 U.S.C. 115 and 37 CFR 1.63. The information is required to obtain or retain a benefit by the public which is to file (and by the USPTO to process) an application. Confidentiality is governed by 35 U.S.C. 122 and 37 CFR 1.11 and 1.14. This collection is estimated to take 1 minute to complete, including gathering, preparing, and submitting the completed application form to the USPTO. Time will vary depending upon the individual case. Any comments on the amount of time you require to complete this form and/or suggestions for reducing this burden, should be sent to the Chief Information Officer, U.S. Patent and Trademark Office, U.S. Department of Commerce, P.O. Box 1450, Alexandria, VA 22313-1450. DO NOT SEND FEES OR COMPLETED FORMS TO THIS ADDRESS. **SEND TO: Commissioner for Patents, P.O. Box 1450, Alexandria, VA 22313-1450.**

If you need assistance in completing the form, call 1-800-PTO-9199 and select option 2.

PATENT APPLICATION FEE DETERMINATION RECORD

Substitute for Form PTO-875

Application or Docket Number
17/856,628

APPLICATION AS FILED - PART I

FOR	(Column 1) NUMBER FILED	(Column 2) NUMBER EXTRA	SMALL ENTITY RATE($)	SMALL ENTITY FEE($)	OR	OTHER THAN SMALL ENTITY RATE($)	OTHER THAN SMALL ENTITY FEE($)
BASIC FEE (37 CFR 1.16(a), (b), or (c))	N/A	N/A	N/A			N/A	320
SEARCH FEE (37 CFR 1.16(k), (i), or (m))	N/A	N/A	N/A			N/A	700
EXAMINATION FEE (37 CFR 1.16(o), (p), or (q))	N/A	N/A	N/A			N/A	800
TOTAL CLAIMS (37 CFR 1.16(i))	20 minus 20 =	*			OR	x 100 =	0.00
INDEPENDENT CLAIMS (37 CFR 1.16(h))	4 minus 3 =	* 1				x 480 =	480
APPLICATION SIZE FEE (37 CFR 1.16(s))	If the specification and drawings exceed 100 sheets of paper, the application size fee due is $310 ($155 for small entity) for each additional 50 sheets or fraction thereof. See 35 U.S.C. 41(a)(1)(G) and 37 CFR 1.16(s).						0.00
MULTIPLE DEPENDENT CLAIM PRESENT (37 CFR 1.16(j))							0.00
* If the difference in column 1 is less than zero, enter "0" in column 2.			TOTAL			TOTAL	2300

APPLICATION AS AMENDED - PART II

AMENDMENT A

	(Column 1) CLAIMS REMAINING AFTER AMENDMENT		(Column 2) HIGHEST NUMBER PREVIOUSLY PAID FOR	(Column 3) PRESENT EXTRA	SMALL ENTITY RATE($)	SMALL ENTITY ADDITIONAL FEE($)	OR	OTHER THAN SMALL ENTITY RATE($)	OTHER THAN SMALL ENTITY ADDITIONAL FEE($)
Total (37 CFR 1.16(i))	*	Minus	**	=	x =		OR	x =	
Independent (37 CFR 1.16(h))	*	Minus	***	=	x =		OR	x =	
Application Size Fee (37 CFR 1.16(s))									
FIRST PRESENTATION OF MULTIPLE DEPENDENT CLAIM (37 CFR 1.16(j))							OR		
					TOTAL ADD'L FEE		OR	TOTAL ADD'L FEE	

AMENDMENT B

	(Column 1) CLAIMS REMAINING AFTER AMENDMENT		(Column 2) HIGHEST NUMBER PREVIOUSLY PAID FOR	(Column 3) PRESENT EXTRA	RATE($)	ADDITIONAL FEE($)		RATE($)	ADDITIONAL FEE($)
Total (37 CFR 1.16(i))	*	Minus	**	=	x =		OR	x =	
Independent (37 CFR 1.16(h))	*	Minus	***	=	x =		OR	x =	
Application Size Fee (37 CFR 1.16(s))									
FIRST PRESENTATION OF MULTIPLE DEPENDENT CLAIM (37 CFR 1.16(j))							OR		
					TOTAL ADD'L FEE		OR	TOTAL ADD'L FEE	

* If the entry in column 1 is less than the entry in column 2, write "0" in column 3.
** If the "Highest Number Previously Paid For" IN THIS SPACE is less than 20, enter "20".
*** If the "Highest Number Previously Paid For" IN THIS SPACE is less than 3, enter "3".
The "Highest Number Previously Paid For" (Total or Independent) is the highest found in the appropriate box in column 1.

UNITED STATES PATENT AND TRADEMARK OFFICE

UNITED STATES DEPARTMENT OF COMMERCE
United States Patent and Trademark Office
Address: COMMISSIONER FOR PATENTS
P.O. Box 1450
Alexandria, Virginia 22313-1450
www.uspto.gov

APPLICATION NUMBER	FILING or 371(c) DATE	GRP ART UNIT	FIL FEE REC'D	ATTY.DOCKET.NO	TOT CLAIMS	IND CLAIMS
17/856,628	07/01/2022		1820	763379	20	4

CONFIRMATION NO. 4418

FILING RECEIPT

OC000000135120538

23460
LEYDIG VOIT & MAYER, LTD
TWO PRUDENTIAL PLAZA, SUITE 4900
180 NORTH STETSON AVENUE
CHICAGO, IL 60601-6731

Date Mailed: 07/14/2022

Receipt is acknowledged of this non-provisional utility patent application. The application will be taken up for examination in due course. Applicant will be notified as to the results of the examination. Any correspondence concerning the application must include the following identification information: the U.S. APPLICATION NUMBER, FILING DATE, NAME OF FIRST INVENTOR, and TITLE OF INVENTION. Fees transmitted by check or draft are subject to collection.

Please verify the accuracy of the data presented on this receipt. If an error is noted on this Filing Receipt, please submit a written request for a corrected Filing Receipt, including a properly marked-up ADS showing the changes with strike-through for deletions and underlining for additions. If you received a "Notice to File Missing Parts" or other Notice requiring a response for this application, please submit any request for correction to this Filing Receipt with your reply to the Notice. When the USPTO processes the reply to the Notice, the USPTO will generate another Filing Receipt incorporating the requested corrections provided that the request is grantable.

Inventor(s)

Shantanu Deshpande, Glenview, IL;
Kingston Wong, Beach Park, IL;

Applicant(s)

Klein Tools, Inc., Lincolnshire, IL;

Assignment For Published Patent Application

Klein Tools, Inc., Lincolnshire, IL

Power of Attorney: The patent practitioners associated with Customer Number 23460

Domestic Priority data as claimed by applicant

This application is a CON of 16/246,935 01/14/2019
which claims benefit of 62/622,472 01/26/2018
and claims benefit of 62/645,491 03/20/2018

Foreign Applications for which priority is claimed (You may be eligible to benefit from the **Patent Prosecution Highway** program at the USPTO. Please see http://www.uspto.gov for more information.) - None.
Foreign application information must be provided in an Application Data Sheet in order to constitute a claim to foreign priority. See 37 CFR 1.55 and 1.76.

Permission to Access Application via Priority Document Exchange: Yes

Permission to Access Search Results: Yes

Applicant may provide or rescind an authorization for access using Form PTO/SB/39 or Form PTO/SB/69 as appropriate.

If Required, Foreign Filing License Granted: 07/12/2022
The country code and number of your priority application, to be used for filing abroad under the Paris Convention, is **US 17/856,628**
Projected Publication Date: To Be Determined - pending completion of Omitted Items
Non-Publication Request: No
Early Publication Request: No
Title

SAFETY HELMET

Preliminary Class

Statement under 37 CFR 1.55 or 1.78 for AIA (First Inventor to File) Transition Applications: No

PROTECTING YOUR INVENTION OUTSIDE THE UNITED STATES

Since the rights granted by a U.S. patent extend only throughout the territory of the United States and have no effect in a foreign country, an inventor who wishes patent protection in another country must apply for a patent in a specific country or in regional patent offices. Applicants may wish to consider the filing of an international application under the Patent Cooperation Treaty (PCT). An international (PCT) application generally has the same effect as a regular national patent application in each PCT-member country. The PCT process **simplifies** the filing of patent applications on the same invention in member countries, but **does not result** in a grant of "an international patent" and does not eliminate the need of applicants to file additional documents and fees in countries where patent protection is desired.

Almost every country has its own patent law, and a person desiring a patent in a particular country must make an application for patent in that country in accordance with its particular laws. Since the laws of many countries differ in various respects from the patent law of the United States, applicants are advised to seek guidance from specific foreign countries to ensure that patent rights are not lost prematurely.

Applicants also are advised that in the case of inventions made in the United States, the Director of the USPTO must issue a license before applicants can apply for a patent in a foreign country. The filing of a U.S. patent application serves as a request for a foreign filing license. The application's filing receipt contains further information and guidance as to the status of applicant's license for foreign filing.

Applicants may wish to consult the USPTO booklet, "General Information Concerning Patents" (specifically, the section entitled "Treaties and Foreign Patents") for more information on timeframes and deadlines for filing foreign patent applications. The guide is available either by contacting the USPTO Contact Center at 800-786-9199, or it can be viewed on the USPTO website at http://www.uspto.gov/web/offices/pac/doc/general/index.html.

For information on preventing theft of your intellectual property (patents, trademarks and copyrights), you may wish to consult the U.S. Government website, http://www.stopfakes.gov. Part of a Department of Commerce initiative, this website includes self-help "toolkits" giving innovators guidance on how to protect intellectual property in specific countries such as China, Korea and Mexico. For questions regarding patent enforcement issues, applicants may call the U.S. Government hotline at 1-866-999-HALT (1-866-999-4258).

LICENSE FOR FOREIGN FILING UNDER

Title 35, United States Code, Section 184

Title 37, Code of Federal Regulations, 5.11 & 5.15

GRANTED

The applicant has been granted a license under 35 U.S.C. 184, if the phrase "IF REQUIRED, FOREIGN FILING LICENSE GRANTED" followed by a date appears on this form. Such licenses are issued in all applications where the conditions for issuance of a license have been met, regardless of whether or not a license may be required as set forth in 37 CFR 5.15. The scope and limitations of this license are set forth in 37 CFR 5.15(a) unless an earlier license has been issued under 37 CFR 5.15(b). The license is subject to revocation upon written notification. The date indicated is the effective date of the license, unless an earlier license of similar scope has been granted under 37 CFR 5.13 or 5.14.

This license is to be retained by the licensee and may be used at any time on or after the effective date thereof unless it is revoked. This license is automatically transferred to any related applications(s) filed under 37 CFR 1.53(d). This license is not retroactive.

The grant of a license does not in any way lessen the responsibility of a licensee for the security of the subject matter as imposed by any Government contract or the provisions of existing laws relating to espionage and the national security or the export of technical data. Licensees should apprise themselves of current regulations especially with respect to certain countries, of other agencies, particularly the Office of Defense Trade Controls, Department of State (with respect to Arms, Munitions and Implements of War (22 CFR 121-128)); the Bureau of Industry and Security, Department of Commerce (15 CFR parts 730-774); the Office of Foreign AssetsControl, Department of Treasury (31 CFR Parts 500+) and the Department of Energy.

NOT GRANTED

No license under 35 U.S.C. 184 has been granted at this time, if the phrase "IF REQUIRED, FOREIGN FILING LICENSE GRANTED" DOES NOT appear on this form. Applicant may still petition for a license under 37 CFR 5.12, if a license is desired before the expiration of 6 months from the filing date of the application. If 6 months has lapsed from the filing date of this application and the licensee has not received any indication of a secrecy order under 35 U.S.C. 181, the licensee may foreign file the application pursuant to 37 CFR 5.15(b).

SelectUSA

The United States represents the largest, most dynamic marketplace in the world and is an unparalleled location for business investment, innovation, and commercialization of new technologies. The U.S. offers tremendous resources and advantages for those who invest and manufacture goods here. Through SelectUSA, our nation works to promote and facilitate business investment. SelectUSA provides information assistance to the international investor community; serves as an ombudsman for existing and potential investors; advocates on behalf of U.S. cities, states, and regions competing for global investment; and counsels U.S. economic development organizations on investment attraction best practices. To learn more about why the United States is the best country in the world to develop technology, manufacture products, deliver services, and grow your business, visit http://www.SelectUSA.gov or call +1-202-482-6800.

UNITED STATES PATENT AND TRADEMARK OFFICE

UNITED STATES DEPARTMENT OF COMMERCE
United States Patent and Trademark Office
Address: COMMISSIONER FOR PATENTS
P.O. Box 1450
Alexandria, Virginia 22313-1450
www.uspto.gov

APPLICATION NUMBER	FILING OR 371(C) DATE	FIRST NAMED APPLICANT	ATTY. DOCKET NO./TITLE
17/856,628	07/01/2022	Shantanu Deshpande	763379

CONFIRMATION NO. 4418

FORMALITIES LETTER

OC000000135120559

23460
LEYDIG VOIT & MAYER, LTD
TWO PRUDENTIAL PLAZA, SUITE 4900
180 NORTH STETSON AVENUE
CHICAGO, IL 60601-6731

Date Mailed: 07/14/2022

NOTICE OF OMITTED ITEM(S) IN A NONPROVISIONAL APPLICATION

FILED UNDER 37 CFR 1.53(b)

A filing date has been accorded to the above-identified nonprovisional application papers; however, the following item(s) appear to have been omitted from the application:

- Figure(s) **ALL** described in the specification.

Applicant must reply to this Notice within the time period set forth in this Notice to avoid abandonment of the above-identified nonprovisional application. Applicant must select one of the three following options and the reply must comply with the requirements set forth in the selected option and any other requirements set forth in this Notice. **The reply should also indicate which option applicant has selected.** Petitions in accordance with option I or II should be addressed to: Mail Stop Petitions, Commissioner for Patents, P.O. Box 1450, Alexandria VA 22313-1450.

I. Petition for date of deposit: Should applicant contend that the above-noted item(s) was in fact deposited in the U.S. Patent and Trademark Office (USPTO) with the nonprovisional application papers, a copy of this Notice a petition, the petition fee set forth in 37 CFR 1.17(f), and evidence of such deposit must be filed within **TWO MONTHS** of the date of this Notice. See 37 CFR 1.53(e)(2). THIS TWO MONTH PERIOD IS EXTENDABLE UNDER 37 CFR 1.136(a) or (b). The petition fee will be refunded if it is determined that the above-noted item(s) was received by the USPTO with the application papers deposited on filing.

Applicant should review their application file and determine whether their file differs from USPTO's records. In some situations, there may be a mislabeling of the drawings and/or a failure to describe in the brief description each of the figures as labeled. See 37 CFR 1.74, 1.77(b)(9), and 1.84(u)(1).

The brief description of the drawings in the specification must correspond with the figures (see 37 CFR 1.74 and 1.77(b)(9)), and the figures must be labeled in accordance with 37 CFR 1.84(u)(1). For example, if the brief description describes only Figure 1 and Figure 2, but the drawings show Fig. 1 and Fig. 2A and Fig. 2B, then applicant must file a substitute specification, which adds references to Figure 2A and Figure 2B and deletes the reference to Figure 2, in compliance with 37 CFR 1.52, 1.121(b)(3), and 1.125. As another example, if a drawing is labeled Figure 2, but Figure 2 includes multiple figures labeled as A, B, and C, then applicant must file replacement drawing sheets in compliance with 37 CFR 1.84 and 1.121(d), with figure labeling in accordance with 37 CFR 1.84(u)(1) (e.g., Fig. 2A, Fig. 2B, and Fig. 2C). If the specification does not refer to the figures as relabeled, then applicant must also file a substitute specification)in compliance with 37 CFR 1.52, 1.121(b)(3), and 1.125 that amends the specification to refer to the relabeled figures (e.g., Fig. 2A, Fig. 2B, and Fig. 2C). **A petition for date of deposit under option I should NOT be filed in situations where there is simply a mislabeling of the drawings and/or a failure to describe in the brief description each of the figures.**

Instead, applicant should file a reply under option III(A) below (including replacement drawing sheets and/or a substitute specification as described).

II. Petition for later filing date: Should applicant desire to supply the omitted item(s) and accept the date that such omitted item(s) was filed in the USPTO as the filing date of the above-identified application, a copy of this Notice, the omitted item(s), and a petition under 37 CFR 1.182 with the petition fee set forth in 37 CFR 1.17(f) requesting the later filing date must be filed within **TWO MONTHS** of the date of this Notice. THIS TWO MONTH PERIOD IS EXTENDABLE UNDER 37 CFR 1.136(a) or (b).

Applicant is advised that generally the filing fee required for an application is the filing fee in effect on the filing date accorded the application and that payment of the requisite basic filing fee on a date later than the filing date of the application requires payment of a surcharge (37 CFR 1.16(f)). To avoid processing delays and payment of a surcharge, applicant should submit any balance due for the requisite filing fee based on the later filing date being requested when submitting the omitted item(s) and the petition (and petition fee) requesting the later filing date.

III. Accept the application as deposited by filing an appropriate amendment: Applicant may accept the application as deposited in the USPTO by filing an appropriate amendment as set forth in either (A) or (B) below within **TWO MONTHS** of the date of this Notice. THIS TWO MONTH PERIOD IS EXTENDABLE UNDER 37 CFR 1.136(a) or (b). The filing date of the application will remain the date of deposit of the application papers in the USPTO, and original application papers (i.e., the original disclosure of the invention) will include only those application papers present in the USPTO on the date of deposit. A petition is not required for this option.

(A) If applicant chooses to accept the application as deposited without adding the subject matter that was in the omitted item(s), applicant is required to submit one or more of the following items without adding any new matter (see 35 U.S.C. 132(a)):

To remove a missing figure of the drawings or to correct the figure labeling:

- replacement drawing sheets in compliance with 37 CFR 1.121(d) to renumber the drawing figures consecutively (if necessary), and/or
- a substitute specification (excluding claims) in compliance with 37 CFR 1.52, 1.121(b)(3), and 1.125 that amends the specification to cancel any references to any omitted drawing(s) and corrects the references in the specification to the drawing figures to correspond with any relabeled drawing figures.

A proper substitute specification in compliance with 37 CFR 1.52, 1.121(b)(3), and 1.125 consists of:

- A copy of the previously-submitted specification, with deletions shown with strikethrough or brackets and insertions shown with underlining (marked-up version) unless it is indicated above that a marked-up version is not required for each of the correction(s).
- A copy of the amended specification without markings (clean version).
- A statement that the substitute specification contains no new matter, in compliance with 37 CFR 1.121(b)(3) and 1.125.

(B) Alternatively, if applicant chooses to accept the application as deposited but wishes to add the subject matter in the omitted items(s) by relying on an incorporation by reference under 37 CFR 1.57 or other portions of the original disclosure, applicant is required to submit the following without adding any new matter (see 35 U.S.C. 132(a)):

To add a missing figure of the drawings: new and replacement drawing sheets in compliance with 37 CFR 1.121(d);

If applicant is relying on an incorporation by reference under 37 CFR 1.57 to add the omitted subject matter, then applicant must also comply with the requirements of 37 CFR 1.57.

Applicant is cautioned that correction of the above items may cause the specification and drawings page count to exceed 100 pages. If the specification and drawings exceed 100 pages, applicant will need to submit the required application size fee.

- Additional claim fees of $ **480** as an undiscounted entity, including any required multiple dependent claim fee, are required. Applicant must submit the additional claim fees or cancel the additional claims for which fees are due.

SUMMARY OF FEES DUE:

The fee(s) required within **TWO MONTHS** from the date of this Notice to avoid abandonment is/are itemized below. No entity status discount is in effect. If applicant is qualified for small entity status, a written assertion of small entity status must be submitted to establish small entity status. (See 37 CFR 1.27). If applicant is qualified for micro entity status, an acceptable Certification of Micro Entity Status must be submitted to establish micro entity status. (See 37 CFR 1.29 and forms PTO/SB/15A and 15B.)

- $ **480** for **1** independent claims over 3.
- $(**0**) previous unapplied payment amount.
- $ **480** TOTAL FEE BALANCE DUE.

Replies must be received in the USPTO within the set time period or must include a proper Certificate of Mailing or Transmission under 37 CFR 1.8 with a mailing or transmission date within the set time period. For more information and a suggested format, see Form PTO/SB/92 and MPEP 512.

Replies should be mailed to:

Mail Stop Missing Parts
Commissioner for Patents
P.O. Box 1450
Alexandria VA 22313-1450

REPLY VIA ELECTRONIC FILING

A reply may be submitted via electronic filing only by registered users of the appropriate USPTO patent electronic filing system and must include:

- A separate document having the document description, "**Applicant response to Pre-Exam Formalities Notice**"; and
- the item(s) for which a reply period is set forth above.

For more information about electronic filing, contact the Patent Electronic Business Center (EBC) at 1-866-217-9197 or visit at https://www.uspto.gov/ebc.

NOTE: If the reply is not being submitted electronically, a copy of this notice must be included.

Questions about the contents of this notice and the requirements it sets forth should be directed to the Office of Data Management, Application Assistance Unit, at **(571) 272-4000** or **(571) 272-4200** or **1-888-786-0101**.

/fhadera/

Electronic Patent Application Fee Transmittal

Application Number:	17856628
Filing Date:	01-Jul-2022
Title of Invention:	SAFETY HELMET
First Named Inventor/Applicant Name:	Shantanu Deshpande
Filer:	Elias Panos Soupos/Alma Rosales
Attorney Docket Number:	763379

Filed as Large Entity

Filing Fees for Utility under 35 USC 111(a)

Description	Fee Code	Quantity	Amount	Sub-Total in USD($)
Basic Filing:				
Pages:				
Claims:				
INDEPENDENT CLAIMS IN EXCESS OF 3	1201	1	480	480
Miscellaneous-Filing:				
Petition:				
Patent-Appeals-and-Interference:				
Post-Allowance-and-Post-Issuance:				

Description	Fee Code	Quantity	Amount	Sub-Total in USD($)
Extension-of-Time:				
Miscellaneous:				
			Total in USD ($)	**480**

Electronic Acknowledgement Receipt

EFS ID:	46244082
Application Number:	17856628
International Application Number:	
Confirmation Number:	4418
Title of Invention:	SAFETY HELMET
First Named Inventor/Applicant Name:	Shantanu Deshpande
Customer Number:	23460
Filer:	Elias Panos Soupos/Alma Rosales
Filer Authorized By:	Elias Panos Soupos
Attorney Docket Number:	763379
Receipt Date:	21-JUL-2022
Filing Date:	01-JUL-2022
Time Stamp:	15:34:30
Application Type:	Utility under 35 USC 111(a)

Payment information:

Submitted with Payment	yes
Payment Type	DA
Payment was successfully received in RAM	$480
RAM confirmation Number	E20227KF34471152
Deposit Account	121216
Authorized User	Alma Rosales

The Director of the USPTO is hereby authorized to charge indicated fees and credit any overpayment as follows:

37 CFR 1.16 (National application filing, search, and examination fees)

37 CFR 1.17 (Patent application and reexamination processing fees)

37 CFR 1.21 (Miscellaneous fees and charges)

File Listing:

Document Number	Document Description	File Name	File Size(Bytes)/ Message Digest	Multi Part /.zip	Pages (if appl.)
1	Applicant Response to Pre-Exam Formalities Notice	OmittedItemsResponse.pdf	112317 76d9ec2ad6706488c47238564fcae5a5e47e4c9e	no	3
Warnings:					
Information:					
2	Drawings-only black and white line drawings	Application-Drawings.pdf	2357600 fa065d641121cf4ff9bb3713b72d249dbc18f2c1	no	10
Warnings:					
Information:					
3	Preliminary Amendment	PreliminaryAmendment.pdf	130524 63464c2be9ee30cbff134a1034ca43b4b9c62ec1	no	3
Warnings:					
Information:					
4	Fee Worksheet (SB06)	fee-info.pdf	37987 4e0e0f4f0d82e5aa3fb8e835e684ed3d02484db9	no	2
Warnings:					
Information:					
			Total Files Size (in bytes):	2638428	

This Acknowledgement Receipt evidences receipt on the noted date by the USPTO of the indicated documents, characterized by the applicant, and including page counts, where applicable. It serves as evidence of receipt similar to a Post Card, as described in MPEP 503.

New Applications Under 35 U.S.C. 111
If a new application is being filed and the application includes the necessary components for a filing date (see 37 CFR 1.53(b)-(d) and MPEP 506), a Filing Receipt (37 CFR 1.54) will be issued in due course and the date shown on this Acknowledgement Receipt will establish the filing date of the application.
National Stage of an International Application under 35 U.S.C. 371
If a timely submission to enter the national stage of an international application is compliant with the conditions of 35 U.S.C. 371 and other applicable requirements a Form PCT/DO/EO/903 indicating acceptance of the application as a national stage submission under 35 U.S.C. 371 will be issued in addition to the Filing Receipt, in due course.
New International Application Filed with the USPTO as a Receiving Office
If a new international application is being filed and the international application includes the necessary components for an international filing date (see PCT Article 11 and MPEP 1810), a Notification of the International Application Number and of the International Filing Date (Form PCT/RO/105) will be issued in due course, subject to prescriptions concerning national security, and the date shown on this Acknowledgement Receipt will establish the international filing date of the application.

IN THE UNITED STATES PATENT AND TRADEMARK OFFICE

Patent Application No. 17/856,628

Confirmation No. 4418

Attorney Docket No. 763379

RESPONSE TO NOTICE OF OMITTED ITEMS

Applicant(s) hereby respond(s) to the Notice of Omitted Items dated July 14, 2022. Applicant(s) are submitting the inadvertently omitted drawings under **Option III(B)** identified in the Notice of Omitted Items.

1. Status of Applicant

☐ Applicant(s) assert(s) small entity status.

☐ Applicant(s) certifies/certify micro entity status. Note: Form PTO/SB15A or B must be submitted previously or herewith.

2. Documents Submitted Herewith

☐ Executed Inventor Declaration(s)

☐ Executed Power(s) of Attorney by Applicant(s) and Transmittal(s) Therefor

☐ Nucleotide and/or Amino Acid Sequence Submission:

(a) ☐ Computer Readable Form (CRF)

(b) Specification Sequence Listing on:

(1) ☐ CD-ROM or CD-R (2 copies); or

(2) ☐ Paper Copy

(c) ☐ Statement verifying identity of above copies

☐ Verified English translation of application

☐ Copy of the Notice or Notification

☐ Substitute/Replacement Drawings

☐ Substitute Specification (clean and marked). The Substitute Specification contains no new matter.

☒ Other: New Drawing Sheets, Preliminary Amendment

Milwaukee Electric Tool Corporation
Ex-1020
Page 49 of 189

3. Application Filing Fee (Utility)

☐ No application filing fee due

☐ Application filing fee is due in the amount calculated below:

				SMALL ENTITY		OTHER THAN A SMALL ENTITY	
FILING FEE				$80 (EFS)		$320	
SEARCH FEE				$350		$700	
EXAM FEE				$400		$800	
CLAIMS	NUMBER FILED		NUMBER EXTRA	RATE	ADD'L CLAIM FEE	RATE	ADD'L CLAIM FEE
Total Claims	20	– 20 =	0	x 50 =		x 100 =	
Independent Claims	4	– 3 =	1	x 240 =		x 480 =	480
☐ First Presentation of Multiple Dependent Claim				+ 430 =		+ 860 =	
☐ Application Size Fee – If the specification, claims, abstract, drawings, and preliminary amendment exceed 100 sheets of paper, enter number of sheets here: - If application is filed in paper form or is the U.S. national phase of a PCT application, enter this number in Total Sheets, below. - If application is filed via EFS-Web, multiply this number by 0.75 and enter result in Total Sheets, below.							
Total Sheets =	– 100 =		÷ 50 =	x 210=		x 420 =	
			(round **up** to a whole number)				
☐ Assignment Fee (no fee for electronic submission)				+ 50 =		+ 50 =	
			TOTAL FEE DUE =	TOTAL		TOTAL	$480.00

4. Other Fees

☐ Late filing fee, search fee, examination fee, or oath or declaration [37 CFR 1.16(f)] $160.00

☐ Late filing fee, search fee, examination fee, or oath or declaration was previously paid.

☐ Late provisional filing fee [37 CFR 1.16(g)] $60.00

☐ Late filing of English translation of application [37 CFR 1.17(i)(1)] $140.00

☐ Applicant(s) petition(s) for a one-month extension of time under 37 CFR 1.136, the fee for which is $ 0.00

☒ Applicant(s) believe(s) that no extension of time is required. However, this conditional petition is being made to provide for the possibility that Applicant(s) has/have inadvertently overlooked the need for a petition and fee for extension of time.

☐ , the fee for which is

☐ Applicant(s) assert(s) small entity status. Therefore, the Other Fees shown above are reduced by 50%, and the resulting total of the Other Fees is shown below.

☐ Applicant(s) certifies/certify micro entity status. Therefore, the Other Fees shown above are reduced by 75%, and the resulting total of the Other Fees is shown below. Note:

Form PTO/SB15A or B must be submitted previously or herewith.

Total Other Fees: $0.00

5. Total Fee Due

Application Filing Fee [from section 3]	$480.00
Total Other Fees [from section 4 above]	$0.00
	Total Fee Due: $480.00

6. Fee Payment

☒ Charge the indicated **Total Fee Due** to Deposit Account No. 12-1216.

☒ Charge any additional fees owed in connection with this communication to Deposit Account No. 12-1216.

☒ Credit any refund to Account No. 12-1216.

Respectfully submitted,

/Elias P. Soupos/

Elias P. Soupos, Reg. No. 57,375
Telephone: 312-616-5600
Facsimile: 312-616-5700

Date: July 21, 2022

Milwaukee Electric Tool Corporation
Ex-1020
Page 51 of 189

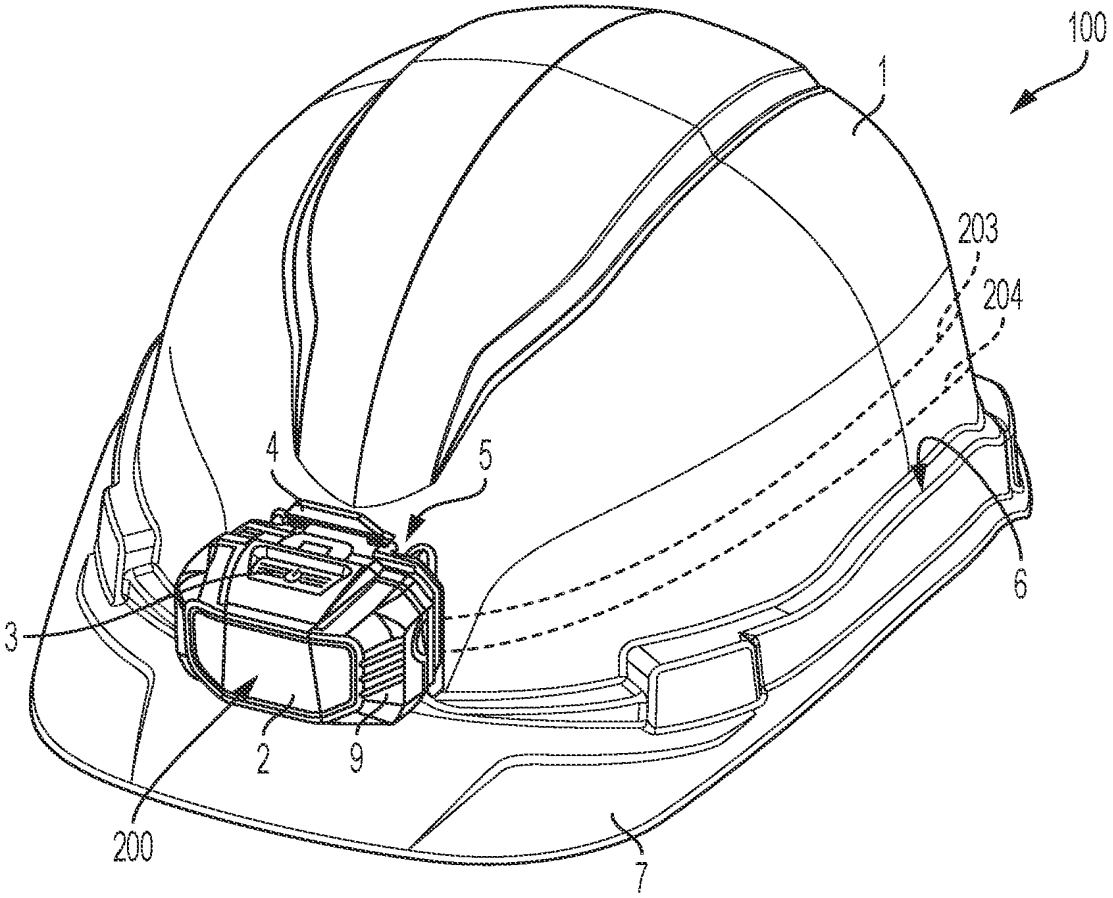

FIG. 1

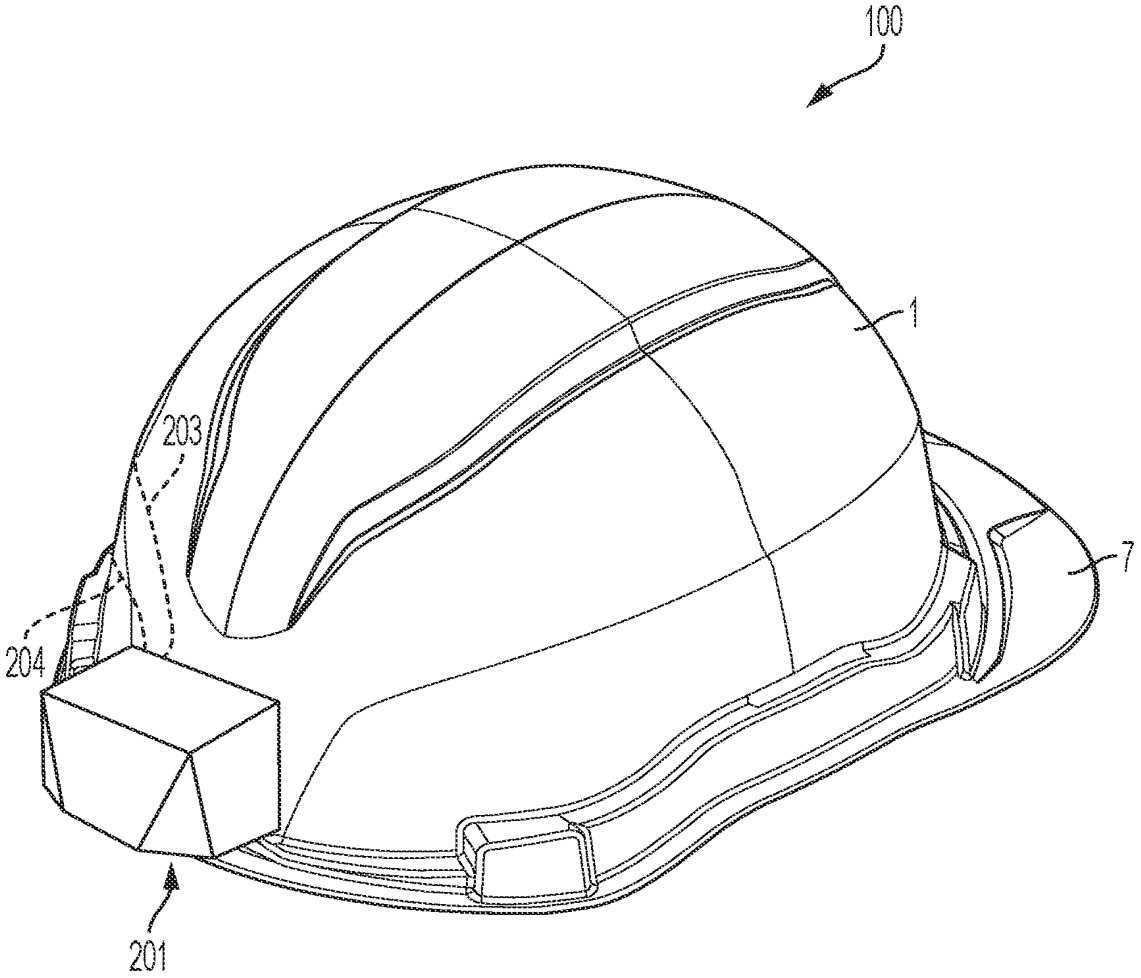

FIG. 2

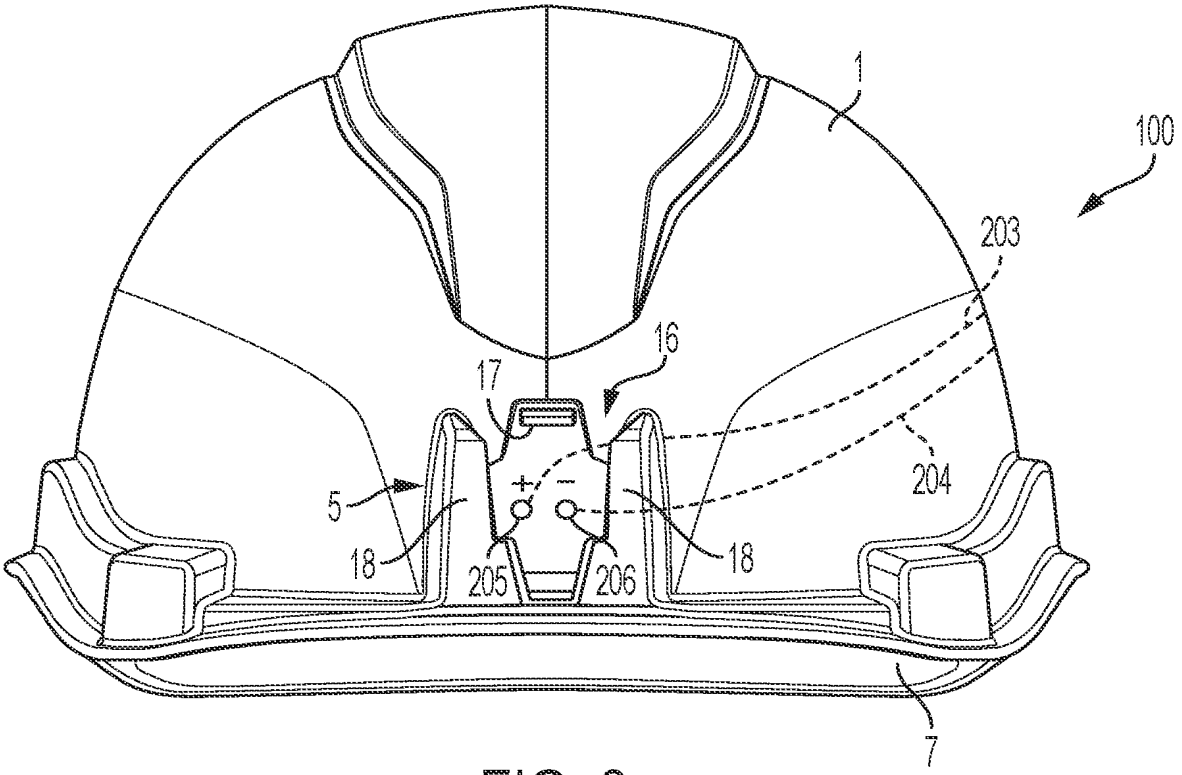

FIG. 3

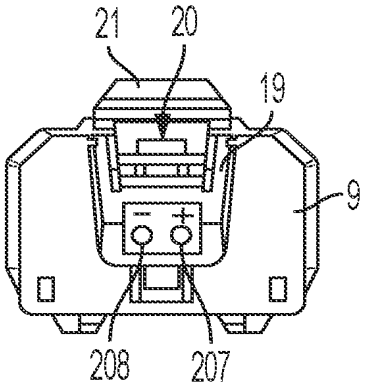

FIG. 4

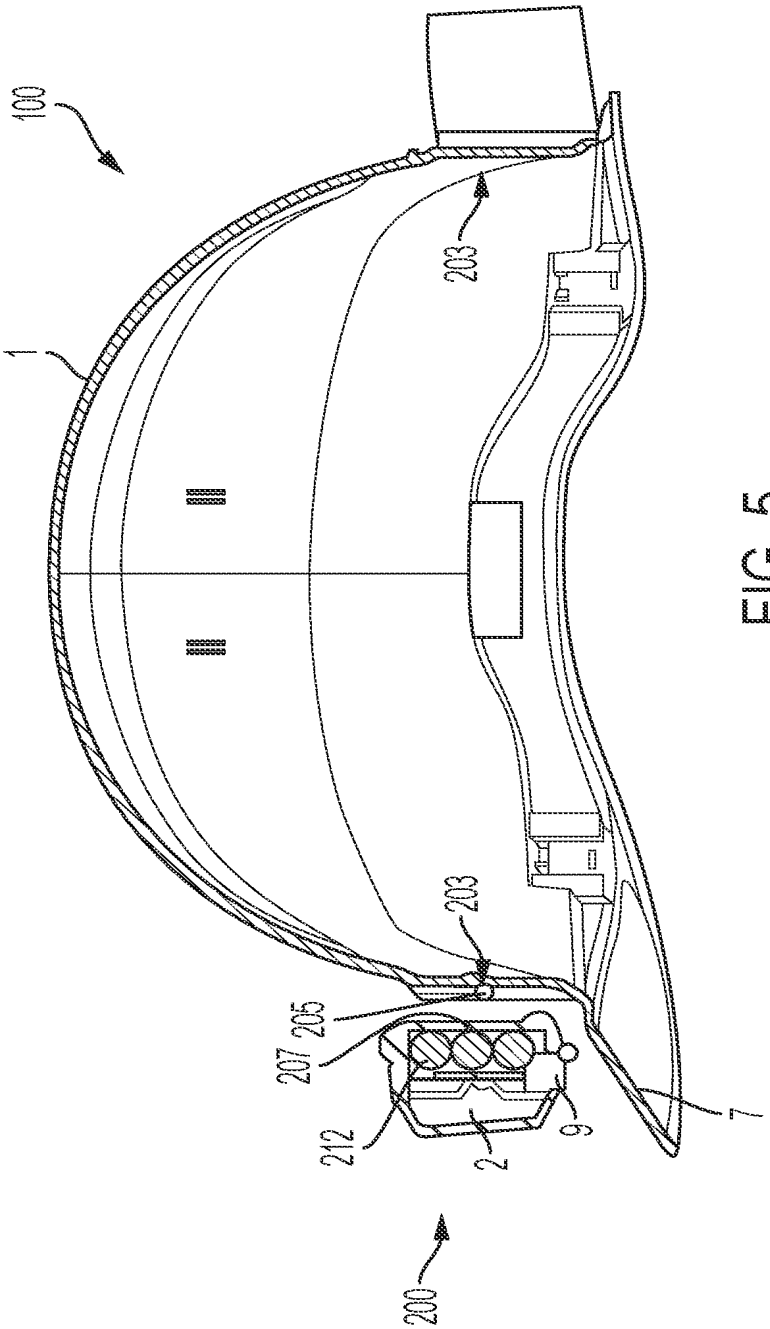

FIG. 5

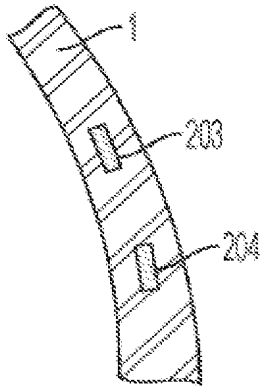

FIG. 6

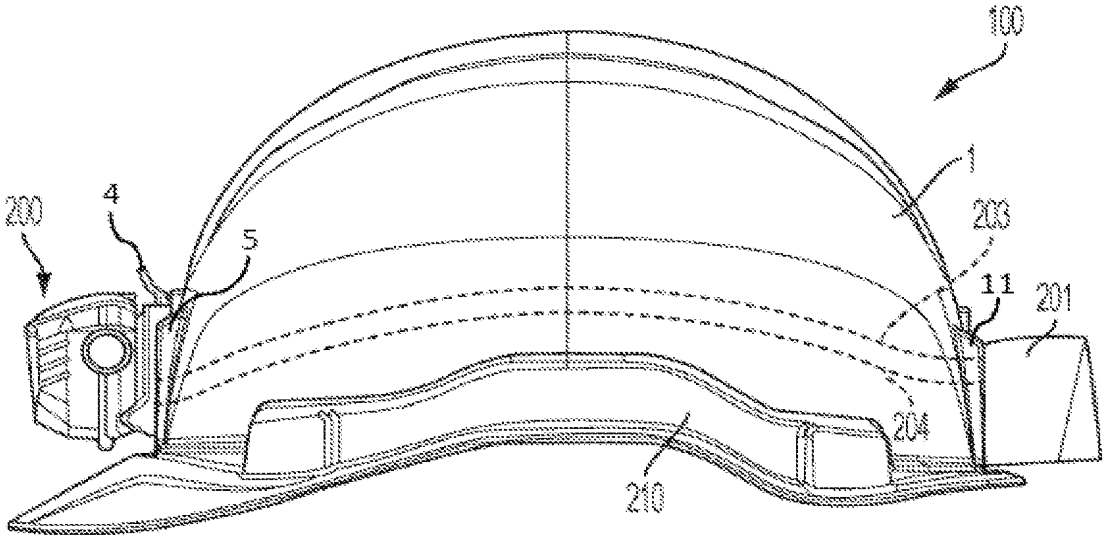

FIG. 7

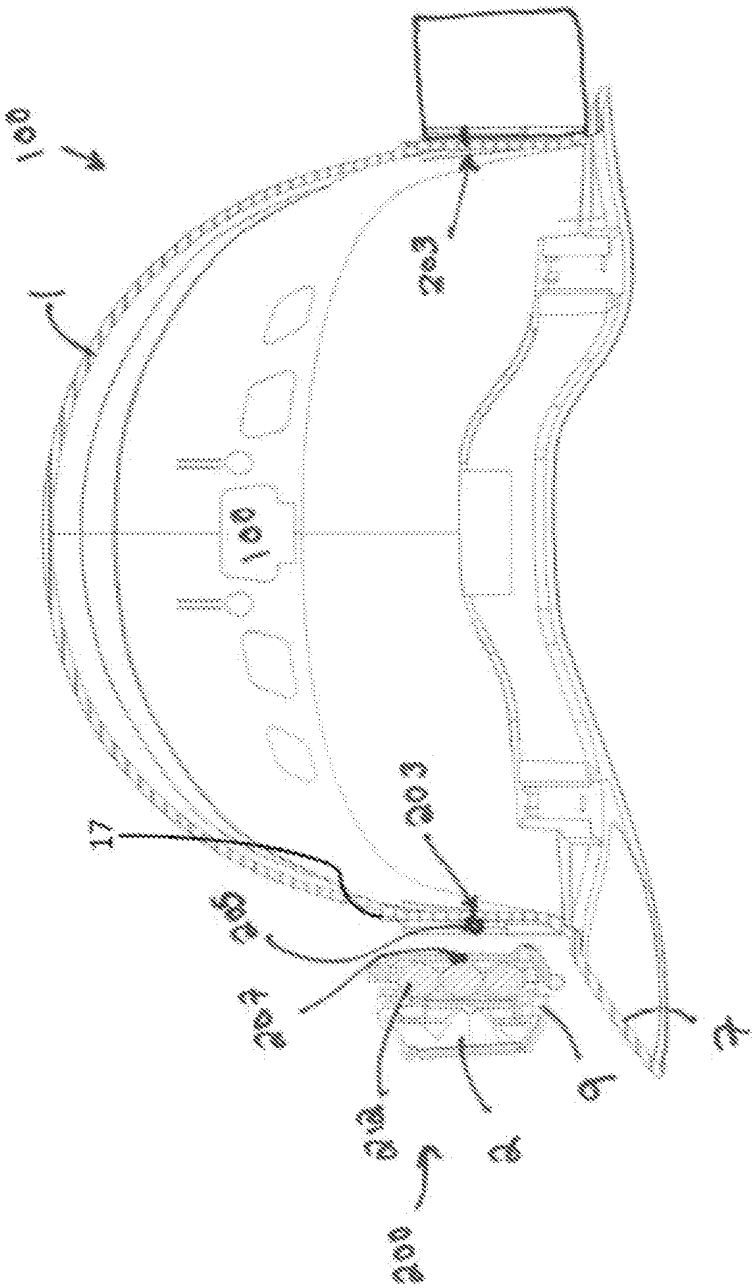

FIG. 8

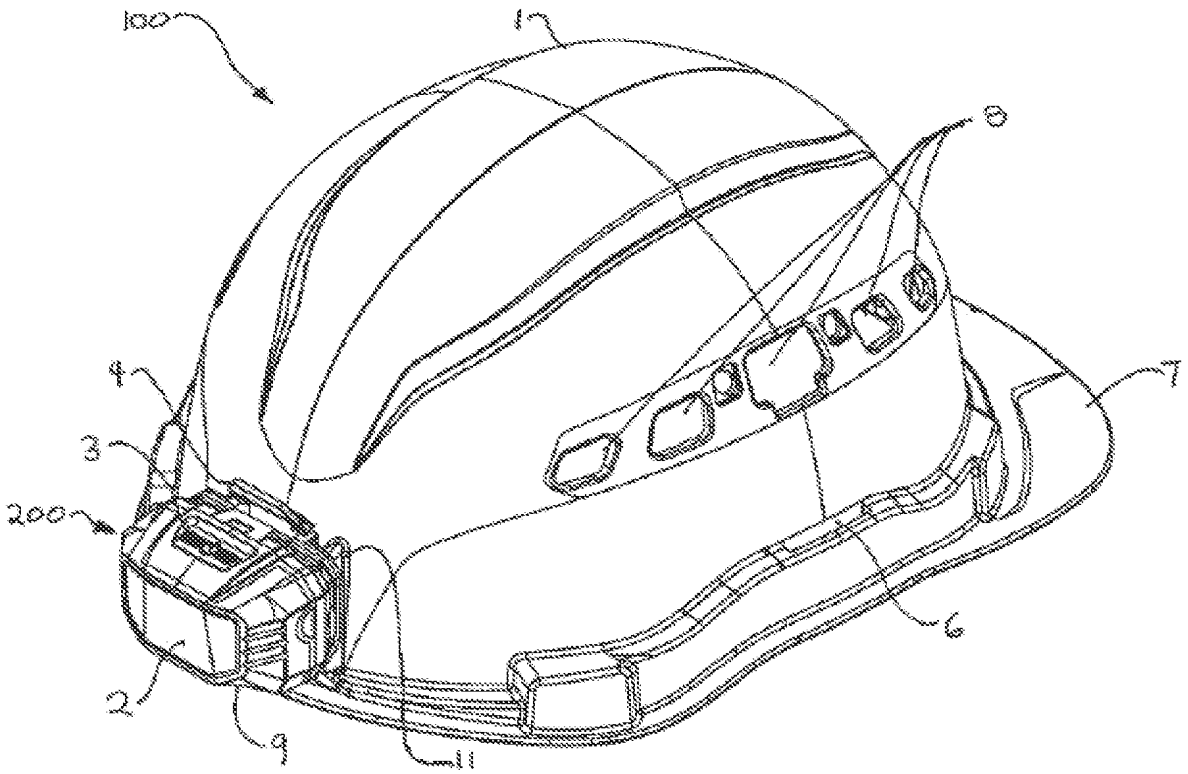

FIG. 9

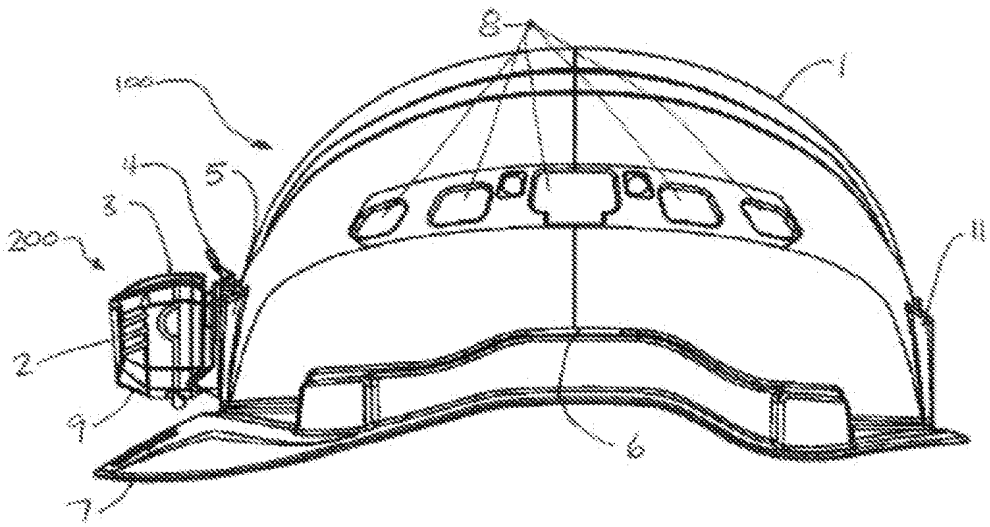

FIG. 10

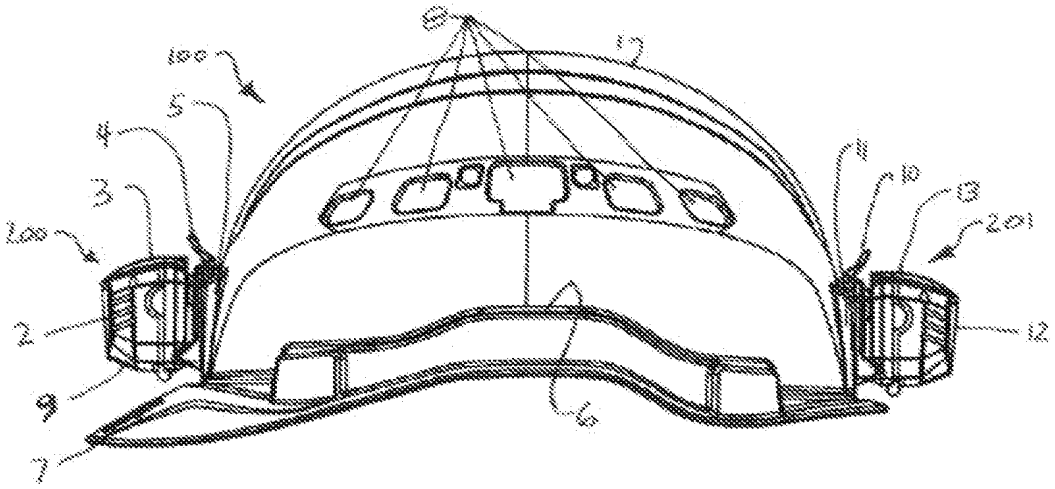

FIG. 11

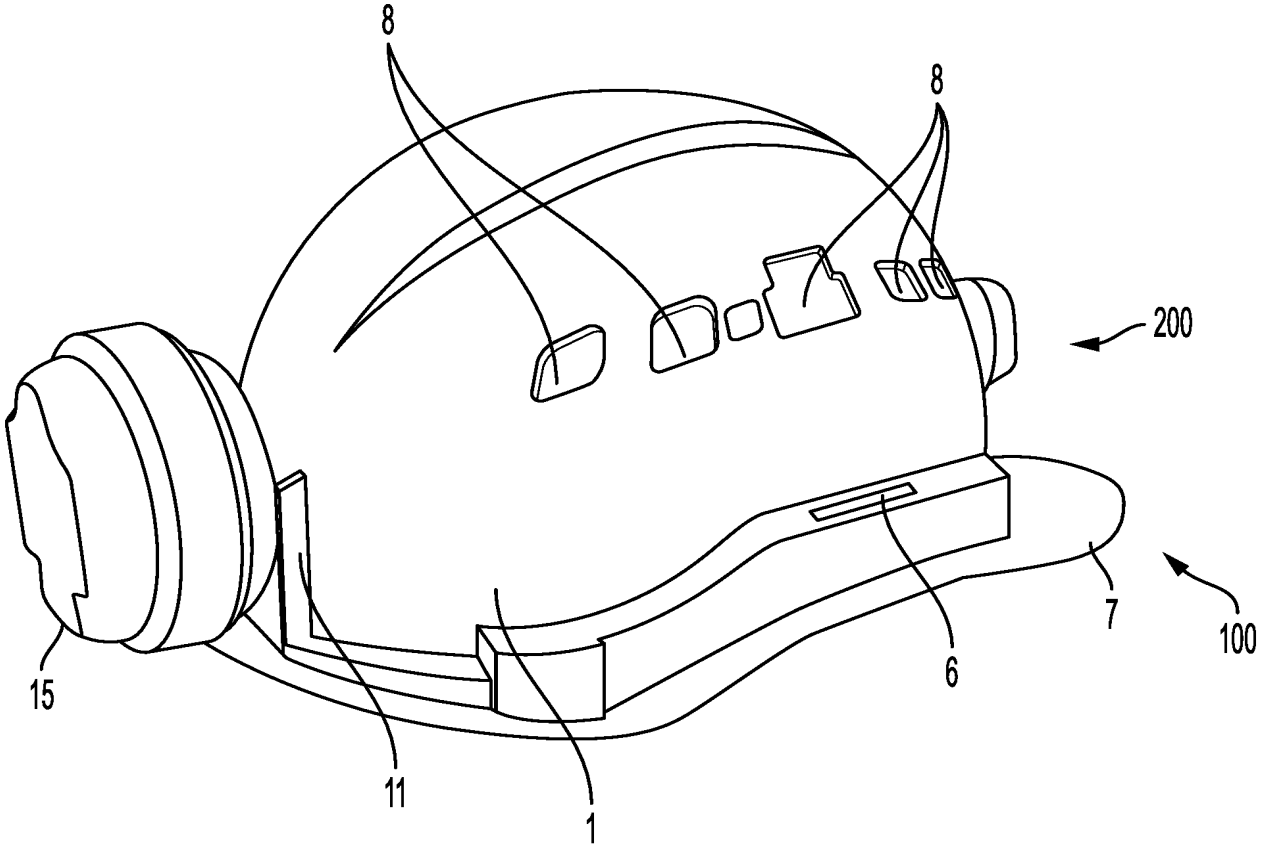

FIG. 12

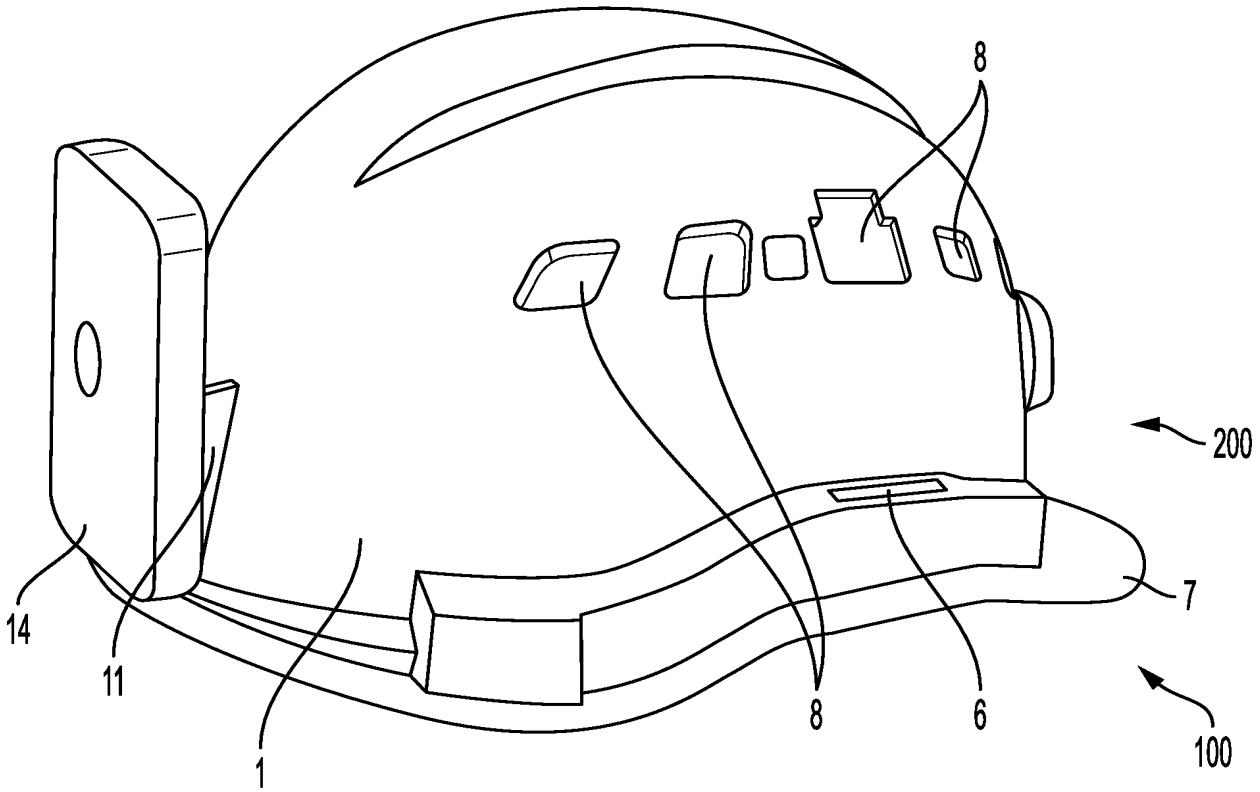

FIG. 13

IN THE UNITED STATES PATENT AND TRADEMARK OFFICE

Patent Application No. 17/856,628

Confirmation No. 4418

Attorney Docket No. 763379

PRELIMINARY AMENDMENT

Prior to the examination of the above-identified patent application, please enter the following amendments and consider the following remarks.

Amendments to the Drawings begin on page 2 of this paper.
Remarks/Arguments begin on page 3 of this paper.

Milwaukee Electric Tool Corporation
Ex-1020
Page 62 of 189

AMENDMENTS TO THE DRAWINGS

The new sheets present Figures 1-13.

Attachment: New Sheet(s)

Milwaukee Electric Tool Corporation
Ex-1020
Page 63 of 189

REMARKS/ARGUMENTS

New drawing sheets have been added with Figures 1-13 in accordance with the requirements of the Notice of Omitted Items dated July 14, 2022. These drawings were inadvertently omitted upon filing of this application. All of Figures 1-13 were included as Figures 1-13 in, at least, U.S. Patent Application No. 16/246,935, filed January 14, 2019 to which this application claims priority as a continuation. *See, e.g.*, ADS filed July 1, 2022. The disclosure of this parent application was incorporated by reference in paragraph [0001] of the present application. Accordingly, pursuant to 37 C.F.R. § 1.57(b), no new matter has been added by way of the addition of the new figures.

If, in the opinion of the Examiner, a telephone conference would expedite the prosecution of the present application, the Examiner is invited to call the undersigned attorney.

Respectfully submitted,

/Elias P. Soupos/

Elias P. Soupos, Reg. No. 57,375
Telephone: 312-616-5600
Facsimile: 312-616-5700

Leydig

Date: July 21, 2022

Milwaukee Electric Tool Corporation
Ex-1020
Page 64 of 189

UNITED STATES PATENT AND TRADEMARK OFFICE

UNITED STATES DEPARTMENT OF COMMERCE
United States Patent and Trademark Office
Address: COMMISSIONER FOR PATENTS
P.O. Box 1450
Alexandria, Virginia 22313-1450
www.uspto.gov

APPLICATION NUMBER	FILING or 371(c) DATE	GRP ART UNIT	FIL FEE REC'D	ATTY.DOCKET.NO	TOT CLAIMS	IND CLAIMS
17/856,628	07/01/2022		2300	763379	20	4

CONFIRMATION NO. 4418

UPDATED FILING RECEIPT

OC000000135358491

23460
LEYDIG VOIT & MAYER, LTD
TWO PRUDENTIAL PLAZA, SUITE 4900
180 NORTH STETSON AVENUE
CHICAGO, IL 60601-6731

Date Mailed: 07/25/2022

Receipt is acknowledged of this non-provisional utility patent application. The application will be taken up for examination in due course. Applicant will be notified as to the results of the examination. Any correspondence concerning the application must include the following identification information: the U.S. APPLICATION NUMBER, FILING DATE, NAME OF FIRST INVENTOR, and TITLE OF INVENTION. Fees transmitted by check or draft are subject to collection.

Please verify the accuracy of the data presented on this receipt. If an error is noted on this Filing Receipt, please submit a written request for a corrected Filing Receipt, including a properly marked-up ADS showing the changes with strike-through for deletions and underlining for additions. If you received a "Notice to File Missing Parts" or other Notice requiring a response for this application, please submit any request for correction to this Filing Receipt with your reply to the Notice. When the USPTO processes the reply to the Notice, the USPTO will generate another Filing Receipt incorporating the requested corrections provided that the request is grantable.

Inventor(s)

Shantanu Deshpande, Glenview, IL;
Kingston Wong, Beach Park, IL;

Applicant(s)

Klein Tools, Inc., Lincolnshire, IL;

Assignment For Published Patent Application

Klein Tools, Inc., Lincolnshire, IL

Power of Attorney: The patent practitioners associated with Customer Number 23460

Domestic Priority data as claimed by applicant

This application is a CON of 16/246,935 01/14/2019
which claims benefit of 62/622,472 01/26/2018
and claims benefit of 62/645,491 03/20/2018

Foreign Applications for which priority is claimed (You may be eligible to benefit from the **Patent Prosecution Highway** program at the USPTO. Please see http://www.uspto.gov for more information.) - None.
Foreign application information must be provided in an Application Data Sheet in order to constitute a claim to foreign priority. See 37 CFR 1.55 and 1.76.

Permission to Access Application via Priority Document Exchange: Yes

Permission to Access Search Results: Yes

Applicant may provide or rescind an authorization for access using Form PTO/SB/39 or Form PTO/SB/69 as appropriate.

If Required, Foreign Filing License Granted: 07/12/2022
The country code and number of your priority application, to be used for filing abroad under the Paris Convention, is **US 17/856,628**
Projected Publication Date: 11/03/2022
Non-Publication Request: No
Early Publication Request: No
Title

SAFETY HELMET

Preliminary Class

Statement under 37 CFR 1.55 or 1.78 for AIA (First Inventor to File) Transition Applications: No

PROTECTING YOUR INVENTION OUTSIDE THE UNITED STATES

Since the rights granted by a U.S. patent extend only throughout the territory of the United States and have no effect in a foreign country, an inventor who wishes patent protection in another country must apply for a patent in a specific country or in regional patent offices. Applicants may wish to consider the filing of an international application under the Patent Cooperation Treaty (PCT). An international (PCT) application generally has the same effect as a regular national patent application in each PCT-member country. The PCT process **simplifies** the filing of patent applications on the same invention in member countries, but **does not result** in a grant of "an international patent" and does not eliminate the need of applicants to file additional documents and fees in countries where patent protection is desired.

Almost every country has its own patent law, and a person desiring a patent in a particular country must make an application for patent in that country in accordance with its particular laws. Since the laws of many countries differ in various respects from the patent law of the United States, applicants are advised to seek guidance from specific foreign countries to ensure that patent rights are not lost prematurely.

Applicants also are advised that in the case of inventions made in the United States, the Director of the USPTO must issue a license before applicants can apply for a patent in a foreign country. The filing of a U.S. patent application serves as a request for a foreign filing license. The application's filing receipt contains further information and guidance as to the status of applicant's license for foreign filing.

Applicants may wish to consult the USPTO booklet, "General Information Concerning Patents" (specifically, the section entitled "Treaties and Foreign Patents") for more information on timeframes and deadlines for filing foreign patent applications. The guide is available either by contacting the USPTO Contact Center at 800-786-9199, or it can be viewed on the USPTO website at http://www.uspto.gov/web/offices/pac/doc/general/index.html.

For information on preventing theft of your intellectual property (patents, trademarks and copyrights), you may wish to consult the U.S. Government website, http://www.stopfakes.gov. Part of a Department of Commerce initiative, this website includes self-help "toolkits" giving innovators guidance on how to protect intellectual property in specific countries such as China, Korea and Mexico. For questions regarding patent enforcement issues, applicants may call the U.S. Government hotline at 1-866-999-HALT (1-866-999-4258).

LICENSE FOR FOREIGN FILING UNDER

Title 35, United States Code, Section 184

Title 37, Code of Federal Regulations, 5.11 & 5.15

GRANTED

The applicant has been granted a license under 35 U.S.C. 184, if the phrase "IF REQUIRED, FOREIGN FILING LICENSE GRANTED" followed by a date appears on this form. Such licenses are issued in all applications where the conditions for issuance of a license have been met, regardless of whether or not a license may be required as set forth in 37 CFR 5.15. The scope and limitations of this license are set forth in 37 CFR 5.15(a) unless an earlier license has been issued under 37 CFR 5.15(b). The license is subject to revocation upon written notification. The date indicated is the effective date of the license, unless an earlier license of similar scope has been granted under 37 CFR 5.13 or 5.14.

This license is to be retained by the licensee and may be used at any time on or after the effective date thereof unless it is revoked. This license is automatically transferred to any related applications(s) filed under 37 CFR 1.53(d). This license is not retroactive.

The grant of a license does not in any way lessen the responsibility of a licensee for the security of the subject matter as imposed by any Government contract or the provisions of existing laws relating to espionage and the national security or the export of technical data. Licensees should apprise themselves of current regulations especially with respect to certain countries, of other agencies, particularly the Office of Defense Trade Controls, Department of State (with respect to Arms, Munitions and Implements of War (22 CFR 121-128)); the Bureau of Industry and Security, Department of Commerce (15 CFR parts 730-774); the Office of Foreign AssetsControl, Department of Treasury (31 CFR Parts 500+) and the Department of Energy.

NOT GRANTED

No license under 35 U.S.C. 184 has been granted at this time, if the phrase "IF REQUIRED, FOREIGN FILING LICENSE GRANTED" DOES NOT appear on this form. Applicant may still petition for a license under 37 CFR 5.12, if a license is desired before the expiration of 6 months from the filing date of the application. If 6 months has lapsed from the filing date of this application and the licensee has not received any indication of a secrecy order under 35 U.S.C. 181, the licensee may foreign file the application pursuant to 37 CFR 5.15(b).

SelectUSA

The United States represents the largest, most dynamic marketplace in the world and is an unparalleled location for business investment, innovation, and commercialization of new technologies. The U.S. offers tremendous resources and advantages for those who invest and manufacture goods here. Through SelectUSA, our nation works to promote and facilitate business investment. SelectUSA provides information assistance to the international investor community; serves as an ombudsman for existing and potential investors; advocates on behalf of U.S. cities, states, and regions competing for global investment; and counsels U.S. economic development organizations on investment attraction best practices. To learn more about why the United States is the best country in the world to develop technology, manufacture products, deliver services, and grow your business, visit http://www.SelectUSA.gov or call +1-202-482-6800.

PATENT APPLICATION FEE DETERMINATION RECORD

Substitute for Form PTO-875

Application or Docket Number
17/856,628

APPLICATION AS FILED - PART I

FOR	(Column 1) NUMBER FILED	(Column 2) NUMBER EXTRA	SMALL ENTITY RATE($)	SMALL ENTITY FEE($)	OR	OTHER THAN SMALL ENTITY RATE($)	OTHER THAN SMALL ENTITY FEE($)
BASIC FEE (37 CFR 1.16(a), (b), or (c))	N/A	N/A	N/A			N/A	320
SEARCH FEE (37 CFR 1.16(k), (i), or (m))	N/A	N/A	N/A			N/A	700
EXAMINATION FEE (37 CFR 1.16(o), (p), or (q))	N/A	N/A	N/A			N/A	800
TOTAL CLAIMS (37 CFR 1.16(i))	20 minus 20 =	*			OR	x 100 =	0.00
INDEPENDENT CLAIMS (37 CFR 1.16(h))	4 minus 3 =	* 1				x 480 =	480
APPLICATION SIZE FEE (37 CFR 1.16(s))	If the specification and drawings exceed 100 sheets of paper, the application size fee due is $310 ($155 for small entity) for each additional 50 sheets or fraction thereof. See 35 U.S.C. 41(a)(1)(G) and 37 CFR 1.16(s).						0.00
MULTIPLE DEPENDENT CLAIM PRESENT (37 CFR 1.16(j))							0.00
* If the difference in column 1 is less than zero, enter "0" in column 2.			TOTAL			TOTAL	2300

APPLICATION AS AMENDED - PART II

		(Column 1) CLAIMS REMAINING AFTER AMENDMENT		(Column 2) HIGHEST NUMBER PREVIOUSLY PAID FOR	(Column 3) PRESENT EXTRA	SMALL ENTITY RATE($)	SMALL ENTITY ADDITIONAL FEE($)	OR	OTHER THAN SMALL ENTITY RATE($)	OTHER THAN SMALL ENTITY ADDITIONAL FEE($)
AMENDMENT A	Total (37 CFR 1.16(i))	*	Minus	**	=	x =		OR	x =	
AMENDMENT A	Independent (37 CFR 1.16(h))	*	Minus	***	=	x =		OR	x =	
AMENDMENT A	Application Size Fee (37 CFR 1.16(s))									
AMENDMENT A	FIRST PRESENTATION OF MULTIPLE DEPENDENT CLAIM (37 CFR 1.16(j))							OR		
						TOTAL ADD'L FEE		OR	TOTAL ADD'L FEE	

		(Column 1) CLAIMS REMAINING AFTER AMENDMENT		(Column 2) HIGHEST NUMBER PREVIOUSLY PAID FOR	(Column 3) PRESENT EXTRA	SMALL ENTITY RATE($)	SMALL ENTITY ADDITIONAL FEE($)	OR	OTHER THAN SMALL ENTITY RATE($)	OTHER THAN SMALL ENTITY ADDITIONAL FEE($)
AMENDMENT B	Total (37 CFR 1.16(i))	*	Minus	**	=	x =		OR	x =	
AMENDMENT B	Independent (37 CFR 1.16(h))	*	Minus	***	=	x =		OR	x =	
AMENDMENT B	Application Size Fee (37 CFR 1.16(s))									
AMENDMENT B	FIRST PRESENTATION OF MULTIPLE DEPENDENT CLAIM (37 CFR 1.16(j))							OR		
						TOTAL ADD'L FEE		OR	TOTAL ADD'L FEE	

* If the entry in column 1 is less than the entry in column 2, write "0" in column 3.
** If the "Highest Number Previously Paid For" IN THIS SPACE is less than 20, enter "20".
*** If the "Highest Number Previously Paid For" IN THIS SPACE is less than 3, enter "3".
The "Highest Number Previously Paid For" (Total or Independent) is the highest found in the appropriate box in column 1.

Electronic Acknowledgement Receipt

EFS ID:	46614065
Application Number:	17856628
International Application Number:	
Confirmation Number:	4418
Title of Invention:	SAFETY HELMET
First Named Inventor/Applicant Name:	Shantanu Deshpande
Customer Number:	23460
Filer:	Elias Panos Soupos/Celine Sheehan
Filer Authorized By:	Elias Panos Soupos
Attorney Docket Number:	763379
Receipt Date:	14-SEP-2022
Filing Date:	01-JUL-2022
Time Stamp:	12:34:56
Application Type:	Utility under 35 USC 111(a)

Payment information:

Submitted with Payment	no

File Listing:

Document Number	Document Description	File Name	File Size(Bytes)/ Message Digest	Multi Part /.zip	Pages (if appl.)
1	Transmittal Letter	PreliminaryAmendment-2nd-Transmittal.pdf	84347 038384074fb7bd8fda49899ee3fde3fdb3549243	no	1

Warnings:

Information:					
2	Preliminary Amendment	PreliminaryAmendment-2nd.pdf	161847 5314d6003eb230fee9974bbcc0f204ac0b545aff	no	6
Warnings:					
Information:					
			Total Files Size (in bytes):	246194	

This Acknowledgement Receipt evidences receipt on the noted date by the USPTO of the indicated documents, characterized by the applicant, and including page counts, where applicable. It serves as evidence of receipt similar to a Post Card, as described in MPEP 503.

New Applications Under 35 U.S.C. 111
If a new application is being filed and the application includes the necessary components for a filing date (see 37 CFR 1.53(b)-(d) and MPEP 506), a Filing Receipt (37 CFR 1.54) will be issued in due course and the date shown on this Acknowledgement Receipt will establish the filing date of the application.
National Stage of an International Application under 35 U.S.C. 371
If a timely submission to enter the national stage of an international application is compliant with the conditions of 35 U.S.C. 371 and other applicable requirements a Form PCT/DO/EO/903 indicating acceptance of the application as a national stage submission under 35 U.S.C. 371 will be issued in addition to the Filing Receipt, in due course.
New International Application Filed with the USPTO as a Receiving Office
If a new international application is being filed and the international application includes the necessary components for an international filing date (see PCT Article 11 and MPEP 1810), a Notification of the International Application Number and of the International Filing Date (Form PCT/RO/105) will be issued in due course, subject to prescriptions concerning national security, and the date shown on this Acknowledgement Receipt will establish the international filing date of the application.

USPTO TRANSMITTAL

PATENT
Attorney Docket No. 763379

Application No. 17/856,628
Confirmation No. 4418

Transmitted herewith is a Preliminary Amendment in the subject application.

☒ Petition for an extension of time for the period noted below, as well as for any additional period necessary to render the present submission timely. Please charge Deposit Account No. 12-1216 for the appropriate petition fee.

☐ Other:

☒ Please charge Deposit Account No. 12-1216 in the total amount indicated below.

TIME EXTENSION PETITION FEE			none			$0
subtract time extension fee previously paid			none			($0)
CLAIM FEE	CLAIMS REMAINING AFTER AMENDMENT		HIGHEST NUMBER PREVIOUSLY PAID FOR	EXTRA CLAIMS PRESENT	RATE	ADDITIONAL CLAIM FEE
TOTAL	19	MINUS	20	= 0	x $100 =	$0
INDEPENDENT	2	MINUS	4	= 0	x $480 =	$0
☐	FIRST PRESENTATION OF MULTIPLY DEPENDENT CLAIM				+ $860 =	$0
SUBTOTAL (of all items above)						$0
☐	Small entity status is claimed for this application under 37 CFR 1.27. Fees above are reduced by ½.					($0)
☐	Micro entity status is claimed for this application under 37 CFR 1.27. Fees above are reduced by ¾.					($0)
OTHER FEES AS DESCRIBED:						$0
TOTAL AMOUNT TO BE CHARGED TO DEPOSIT ACCOUNT						**$0**

☒ The Commissioner is hereby authorized to charge any deficiencies in the following fees associated with this communication or credit any overpayment to Deposit Account No. 12-1216.
- ☒ Any filing fees under 37 CFR 1.16 and/or 1.492 for the presentation of extra claims.
- ☒ Any patent application processing fees under 37 CFR 1.17.

Leydig

/Elias P. Soupos/
Elias P. Soupos, Reg. No. 57,375
Telephone: 312-616-5600
Facsimile: 312-616-5700

Date: September 14, 2022

IN THE UNITED STATES PATENT AND TRADEMARK OFFICE

Patent Application No. 17/856,628

Confirmation No. 4418

Attorney Docket No. 763379

SECOND PRELIMINARY AMENDMENT

Prior to the examination of the above-identified patent application, please enter the following amendments and consider the following remarks.

Amendments to the Claims begin on page 2 of this paper.
Remarks/Arguments begin on page 6 of this paper.

Milwaukee Electric Tool Corporation
Ex-1020
Page 72 of 189

AMENDMENTS TO THE CLAIMS

The claim listing below replaces all previous claim listings in this application.

Claims 1–20 (Cancelled).

21. (New) A safety helmet system, comprising:

a safety helmet comprising:

a molded outer shell adapted to be worn by a user, the outer shell having an exterior surface defining a front side, a rear side, and a brim extending forward from the front side;

a front receptacle having a first pair of external slots and a stop, wherein each of the first pair of external slots extends upwardly along the front side of the outer shell and the stop is disposed between the first pair of external slots, and wherein the stop is integrally molded with the exterior surface of the outer shell; and

a rear receptacle disposed on the rear side on the exterior surface of the outer shell, the rear receptacle having a second pair of external slots; and

an accessory device having a mating receptacle formed thereon, at least a portion of the mating receptacle being selectively engageable with the front receptacle or the rear receptacle such that the accessory device is releasably mountable onto each of the front receptacle and the rear receptacle.

22. (New) The safety helmet system of claim 21, wherein the stop includes a protruding member, and wherein the protruding member is integrally molded from a plastic material with the outer shell.

23. (New) The safety helmet system of claim 21, wherein each of the first pair of external slots of the front receptacle is a receiver slot flanked by raised walls, and the stop comprises a protruding member, wherein the accessory device includes a clip, and wherein the receiver slot aligns the accessory device therein, the raised walls retain the accessory device therebetween, and the protruding member engages the clip to releasably mount the accessory device in the front receptacle.

24. (New) The safety helmet system of claim 21, wherein the outer shell, the front receptacle, and the rear receptacle are formed from a common material.

Milwaukee Electric Tool Corporation
Ex-1020
Page 73 of 189

25. (New) The safety helmet system of claim 24, wherein the common material is plastic.

26. (New) The safety helmet system of claim 21, further including a second accessory device having a second mating receptacle formed thereon, at least a portion of the second accessory device being releasably mountable onto each of the front receptacle or the rear receptacle on the exterior of the outer shell.

27. (New) The safety helmet of claim 21, wherein:

each of the first pair of external slots includes a first sidewall, which define a pair of first sidewalls;

the accessory device includes a bracket; and

the bracket is retained by the pair of first sidewalls to mount the accessory device to the front receptacle.

28. (New) The safety helmet of claim 27, wherein:

each of the first pair of external slots includes a second sidewall, which define a pair of second sidewalls; and

the bracket is retained by the pair of first sidewalls and the pair of second sidewalls.

29. (New) A safety helmet system, comprising:

a safety helmet comprising:

an outer shell adapted to be worn by a user, an exterior of the outer shell having a front side, a rear side, and a brim extending outwardly from the front side;

at least one receptacle having two external slots and a stop on the exterior of the outer shell, each of the external slots extending upwardly on at least one of the front side or the rear side along the exterior of the outer shell on either side of the stop, wherein the outer shell forms the stop from a same material as the outer shell; and

an accessory device having a mating receptacle formed thereon, at least a portion of the mating receptacle being selectively engageable with the at least one receptacle such that the accessory device is releasably mountable onto the exterior of the outer shell.

Milwaukee Electric Tool Corporation
Ex-1020
Page 74 of 189

30. (New) The safety helmet system of claim 29, wherein each of the first pair of external slots of the at least one receptacle is a receiver slot flanked by raised walls and the stop comprises a protruding member, wherein the accessory device includes a clip, and wherein the receiver slot aligns the accessory device therein, the raised walls retain the accessory device therebetween, and the stop engages the clip to releasably mount the accessory device in the at least one receptacle.

31. (New) The safety helmet system of claim 29, wherein the at least one receptacle is a front receptacle disposed on the front side, and wherein the outer shell further includes a rear receptacle having an identical construction to the front receptacle, the rear receptacle being disposed on the rear side of the outer shell.

32. (New) The safety helmet system of claim 29, wherein the same material is plastic.

33. (New) The safety helmet system of claim 31, further including a second accessory device having a second mating receptacle formed thereon, at least a portion of the second accessory device being releasably mountable onto either of the front receptacle and the rear receptacle on the exterior of the outer shell.

34. (New) The safety helmet system of claim 29, wherein:

each of the two external slots of the at least one receptacle includes a first sidewall, which define a pair of first sidewalls;

the accessory device includes a bracket; and

the bracket is retained by the pair of first sidewalls to mount the accessory device to the at least one receptacle.

35. (New) The safety helmet system of claim 34, wherein:

each of the two external slots of the at least one receptacle includes a second sidewall, which define a pair of second sidewalls; and

the bracket is retained by the pair of first sidewalls and the pair of second sidewalls.

36. (New) A safety helmet, comprising:

an outer shell adapted to be worn by a user, an exterior of the outer shell having a front side, a rear side, and a brim extending outwardly from the front side;

Milwaukee Electric Tool Corporation
Ex-1020
Page 75 of 189

a front receptacle having a first external slot and a first stop;

a rear receptacle disposed on the rear side on the exterior of the outer shell, the rear receptacle including a second external slot and a second stop;

wherein the outer shell forms the first stop and the second stop from a same material as the outer shell; and

wherein each of the front receptacle and the rear receptacle is adapted to receive therein an accessory device, the accessory device configured to have a mating receptacle formed thereon such that at least a portion of the mating receptacle is selectively engageable with the front receptacle or the rear receptacle, wherein the accessory device is adapted to be releasably mountable onto each of the front receptacle and the rear receptacle on the exterior of the outer shell.

37. (New) The safety helmet of claim 36, wherein the first external slot of the front receptacle is a receiver slot flanked by raised walls and the stop comprises a stop member, wherein the accessory device includes a clip having a stop surface, and wherein the receiver slot aligns the accessory device therein, the raised walls retain the accessory device therebetween, and the stop member engages the stop surface to releasably mount the accessory device in the front receptacle.

38. (New) The safety helmet of claim 36, wherein:

the first external slot includes a first sidewall;

the accessory device is adapted to include a bracket; and

the bracket is adapted to be retained by the first sidewall to releasably mount the accessory device to the front receptacle.

39. (New) The safety helmet of claim 36, wherein:

the first external slot includes a second sidewall; and

the bracket is adapted retained by the first sidewall and the second sidewall.

Milwaukee Electric Tool Corporation
Ex-1020
Page 76 of 189

REMARKS/ARGUMENTS

In the present response, claims 1–20 are cancelled and new claims 21–39 are presented for examination. The subject matter of claims 21–39 finds support in the original claims and disclosure and, thus, no new matter has been introduced into the present application.

If, in the opinion of the Examiner, a telephone conference would expedite the prosecution of the present application, the Examiner is invited to call the undersigned attorney.

Respectfully submitted,

/Elias P. Soupos/
Elias P. Soupos, Reg. No. 57,375
Telephone: 312-616-5600
Facsimile: 312-616-5700

Date: September 14, 2022

Milwaukee Electric Tool Corporation
Ex-1020
Page 77 of 189

Substitute for Form 1449A/B/PTO **INFORMATION DISCLOSURE STATEMENT BY APPLICANT**				Patent Application No.	17/856,628
				Confirmation No.	4418
Sheet	1	of	2	Attorney Docket No.	763379

U.S. PATENT DOCUMENTS						
Examiner Initials	Doc. No.	U.S. Patent Document		Name of Patentee or Applicant	Date of Publication	Filing Date If Appropriate
		Application or Patent Number	Kind Code			
	AA	1,947,786	A	Lueck et al..	02-20-1934	
	AB	4,521,831	A	Thayer	06-04-1985	
	AC	5,026,016	A	Lisowski	06-25-1991	
	AD	5,688,039	A	Johnson	11-18-1997	
	AE	6,497,493	B1	Theisen	12-24-2002	
	AF	6,532,601	B1	Berman	03-18-2003	
	AG	6,616,294	B1	Henry	09-09-2003	
	AH	6,701,649	B1	Brosi	03-09-2004	
	AI	6,811,348	B1	Meyer et al.	11-02-2004	
	AJ	8,060,951	B2	Smith	11-22-2011	
	AK	9,702,534	B1	Brion	07-11-2017	
	AL	9,814,622	B2	Somners	11-14-2017	
	AM	9,872,531	B2	Uke et al.	01-23-2018	
	AN	10,743,599	B2	Silva et al.	08-18-2020	
	AO	10,886,646	B2	Goupil et al.	01-05-2021	
	AP	11,019,870	B2	Hyma	06-01-2021	
	AQ	2002/0116749	A1	Bielefeld et al.	08-26-2003	
	AR	2008/0263752	A1	Solinsky et al.	10-30-2008	
	AS	2010/0083413	A1	Mcgovern	04-08-2010	
	AT	2011/0072562	A1	Prendergast	03-31-2011	
	AU	2012/0224356	A1	Fischer et al.	09-06-2012	
	AV	2012/0317706	A1	Lebel et al.	04-25-2017	
	AW	2012/0320569	A1	Lu	12-20-2012	
	AX	2013/0086722	A1	Teetzel et al.	12-09-2014	
	AY	2014/0000013	A1	Redpath et al.	01-02-2014	
	AZ	2014/0000014	A1	Redpath et al.	01-02-2014	
	BA	2014/0020159	A1	Teetzel et al.	01-23-2014	
	BB	2016/0242483	A1	Dorsey et al.	08-25-2016	
	BC	2016/0249700	A1	Zhavoronkov	09-01-2016	
	BD	2017/0238642	A1	Tatum	08-24-2017	
	BE	2018/0128459	A1	Carroll	05-10-2018	
	BF	2018/0192727	A1	Chen	07-12-2018	
	BG	2018/0249779	A1	DeLima et al.	09-06-2018	
	BH	2019/0008228	A1	Ramey	01-10-2019	
	BI	2019/0098952	A1	Teetzel et al.	04-04-2019	
	BJ	2019/0101359	A1	Zimmer	04-04-2019	
	BK	2019/0104797	A1	Teetzel et al.	04-11-2019	
	BL	2019/0107247	A1	Teetzel et al.	04-11-2019	
	BM	2019/0350291	A1	Maldonado et al.	11-21-2019	
	BN	2019/0350292	A1	Maldonado et al.	05-12-2020	
	BO	2020/0170329	A1	Bohn et al.	02-09-2021	
	BP	2020/0268088	A1	Sanchez	06-14-2022	
	BQ	2020/0329806	A1	Wong	10-22-2020	

Examiner Signature		Date Considered	

* If the reference is not in English, then at least one of the following is provided: (a) an English translation in whole or in part or (b) a concise statement of relevance in the form of, for example, an English language counterpart, an English-language abstract, or an English-language version of the search report or action by a foreign patent office in a counterpart foreign application indicating the degree of relevance found by the foreign office.

Substitute for Form 1449A/B/PTO **INFORMATION DISCLOSURE STATEMENT BY APPLICANT**				Patent Application No.	17/856,628
				Confirmation No.	4418
Sheet	2	of	2	Attorney Docket No.	763379

FOREIGN PATENT DOCUMENTS							
Examiner Initials	Doc. No.	Foreign Patent Document			Name of Patentee or Applicant	Date of Publication	Translation *
		Office	Application or Patent Number	Kind Code			
	BR	CA	2759794	A1	Norotos, Inc.	11-11-2010	
	BS	DE	102016115897	A1	Schuberth GmbH	03-01-2018	

Examiner Signature		Date Considered	

* If the reference is not in English, then at least one of the following is provided: (a) an English translation in whole or in part or (b) a concise statement of relevance in the form of, for example, an English language counterpart, an English-language abstract, or an English-language version of the search report or action by a foreign patent office in a counterpart foreign application indicating the degree of relevance found by the foreign office.

Electronic Acknowledgement Receipt

EFS ID:	46885944
Application Number:	17856628
International Application Number:	
Confirmation Number:	4418
Title of Invention:	SAFETY HELMET
First Named Inventor/Applicant Name:	Shantanu Deshpande
Customer Number:	23460
Filer:	Elias Panos Soupos/Celine Sheehan
Filer Authorized By:	Elias Panos Soupos
Attorney Docket Number:	763379
Receipt Date:	25-OCT-2022
Filing Date:	01-JUL-2022
Time Stamp:	12:19:10
Application Type:	Utility under 35 USC 111(a)

Payment information:

Submitted with Payment	no

File Listing:

Document Number	Document Description	File Name	File Size(Bytes)/ Message Digest	Multi Part /.zip	Pages (if appl.)
1	Transmittal Letter	IDS-1st.pdf	161205 ad46ce21e9098f2224af328204bc9b3d612d5914	no	4

Warnings:

Information:					
2	Information Disclosure Statement (IDS) Form (SB08)	1449-1st.pdf	72969 1678d2125768665072e6a42552cea78a95533611	no	2

Warnings:

Information:

This is not an USPTO supplied IDS fillable form

Total Files Size (in bytes):	234174

This Acknowledgement Receipt evidences receipt on the noted date by the USPTO of the indicated documents, characterized by the applicant, and including page counts, where applicable. It serves as evidence of receipt similar to a Post Card, as described in MPEP 503.

<u>New Applications Under 35 U.S.C. 111</u>
If a new application is being filed and the application includes the necessary components for a filing date (see 37 CFR 1.53(b)-(d) and MPEP 506), a Filing Receipt (37 CFR 1.54) will be issued in due course and the date shown on this Acknowledgement Receipt will establish the filing date of the application.
<u>National Stage of an International Application under 35 U.S.C. 371</u>
If a timely submission to enter the national stage of an international application is compliant with the conditions of 35 U.S.C. 371 and other applicable requirements a Form PCT/DO/EO/903 indicating acceptance of the application as a national stage submission under 35 U.S.C. 371 will be issued in addition to the Filing Receipt, in due course.
<u>New International Application Filed with the USPTO as a Receiving Office</u>
If a new international application is being filed and the international application includes the necessary components for an international filing date (see PCT Article 11 and MPEP 1810), a Notification of the International Application Number and of the International Filing Date (Form PCT/RO/105) will be issued in due course, subject to prescriptions concerning national security, and the date shown on this Acknowledgement Receipt will establish the international filing date of the application.

IN THE UNITED STATES PATENT AND TRADEMARK OFFICE

Patent Application No. 17/856,628

Confirmation No. 4418

Attorney Docket No. 763379

INFORMATION DISCLOSURE STATEMENT

Pursuant to 37 CFR 1.97 and 1.98, the documents listed on the accompanying Form PTO-1449, Substitute Form PTO-1449, and/or USPTO Form SB/08 (hereinafter, individually or collectively referred to as "Form") are submitted for consideration by the Examiner in the examination of the above-identified patent application.

The full consideration of the documents in their entirety by the Examiner is respectfully requested and encouraged. Also, it is respectfully requested that the documents be entered into the record of the present application and that the Examiner initial the appropriate area on the accompanying Form, thereby indicating the Examiner's consideration of each of the documents.

The submission of the documents listed on the Form is for the purpose of providing a complete record and is not a concession that the documents listed thereon are prior art to the invention claimed in the patent application. The right is expressly reserved to establish an invention date earlier than the above-identified filing date in order to remove any document submitted herewith as prior art should it be deemed appropriate to do so.

Further, the submission of the documents is not to be taken as a concession that any reference represents art that is relevant or analogous to the claimed invention. Accordingly, the right to argue that any document is not properly within the scope of prior art relevant to an examination of the claims in the above-identified application is also expressly reserved.

The Information Disclosure Statement is being filed:

☒ **within** any one of the following time periods: (a) within three months of the filing date of a national application other than a continued prosecution application under 37 CFR 1.53(d); (b) within three months of the date of entry of the national stage as set forth in 37 CFR 1.491 of an international application; (c) before the mailing date of a first Office Action on the merits; or (d) before the mailing of a first Office Action after the filing of a request for continued examination under 37 CFR 1.114.

☐ Note: This submission includes the Statement under 37 CFR 1.704(d) (see "Statement under 37 CFR 1.704(d)" below), such that no reduction in patent term adjustment is warranted by the filing of this Information Disclosure Statement.

☐ **after** (a), (b), (c) or (d) above, but before the mailing date of a final action under 37 CFR 1.113, a Notice of Allowance under 37 CFR 1.311, or an action that otherwise closes prosecution in the application, and includes *one* of:

Milwaukee Electric Tool Corporation
Ex-1020
Page 82 of 189

☐ the Statement under 37 CFR 1.97(e) (see "Statement under 37 CFR 1.97(e)" below).

☐ Note: This submission includes the Statement under 37 CFR 1.704(d) (see "Statement under 37 CFR 1.704(d)" below), such that no reduction in patent term adjustment is warranted by the filing of this Information Disclosure Statement.

– *or* –

☐ the fee set forth in 37 CFR 1.17(p) (see "Fees" below).

☐ **on or after** the mailing date of a final action under 37 CFR 1.113 or a Notice of Allowance under 37 CFR 1.311, or an action that otherwise closes prosecution in the application, and on or before payment of the issue fee, and includes the Statement under 37 CFR 1.97(e) (see "Statement under 37 CFR 1.97(e)" below), and the fee set forth in 37 CFR 1.17(p) (see "Fees" below).

☐ Note: This submission includes the Statement under 37 CFR 1.704(d) (see "Statement under 37 CFR 1.704(d)" below), such that no reduction in patent term adjustment is warranted by the filing of this Information Disclosure Statement.

Statement under 37 CFR 1.97(e)

☐ The **undersigned** hereby states that each item of information contained in the Information Disclosure Statement was first cited in any communication from a foreign patent office in a counterpart foreign patent application not more than three months prior to the filing of the Information Disclosure Statement.

☐ The **undersigned** hereby states that no item of information contained in the Information Disclosure Statement was cited in a communication from a foreign patent office in a counterpart foreign patent application, and, to the knowledge of the undersigned after making reasonable inquiry, no item of information contained in the Information Disclosure Statement was known to any individual designated in 37 CFR 1.56(c) more than three months prior to the filing of the Information Disclosure Statement.

Statement under 37 CFR 1.704(d)

☐ The **undersigned** hereby states that each item of information contained in the Information Disclosure Statement was first cited in any communication from a patent office in a counterpart foreign or international application or from the Office and that this communication was not received by any individual designated in 37 CFR 1.56(c) more than thirty days prior to the filing of the Information Disclosure Statement.

Milwaukee Electric Tool Corporation
Ex-1020
Page 83 of 189

Citation to Other Patent Applications

☒ The following U.S. patent applications are hereby brought to the attention of the Examiner. The U.S. patent applications claim subject matter that may be considered by the Examiner to be similar to the subject matter claimed in the above-identified patent application. Accordingly, these U.S. patent applications and/or the prosecution pertaining thereto may include information considered to be material to the prosecution of the above-identified patent application. Since the Examiner has electronic access to the prosecution histories of these U.S. patent applications, copies of prosecution materials therefrom are not provided herewith, but will be promptly provided if the Examiner so desires and requests same.

U.S. APPLICATIONS		STATUS *(check one)*		
U.S. APPLICATIONS	U.S. FILING DATE	Patented	Pending	Never Issued: Abandoned/Expired
1. 16/246,935	Jan. 14, 2019	X		
2.				
3.				

Copies of the Documents

☐ Copies of any U.S. patents and published patent applications that are listed on the accompanying Form are not enclosed herewith. Copies of any other documents identified on the accompanying Form are enclosed herewith.

☐ For each document not in the English language, at least one of the following is provided: (a) an English translation in whole or in part or (b) a concise statement of relevance in the form of, for example, an English language counterpart, an English-language abstract, or an English-language version of the search report or action by a foreign patent office in a counterpart foreign application indicating the degree of relevance found by the foreign office.

☒ The documents listed on the accompanying Form were previously identified in the parent application(s) of the present application, and copies of the documents were furnished at that time. Accordingly, additional copies of the documents are not submitted herewith, so as not to burden the file with duplicate copies of documents. The Examiner is respectfully requested to carefully review the documents in accordance with the requirements set out in the Manual of Patent Examining Procedure. In accordance with 37 CFR 1.98(d), the details of the parent application(s) relied upon for an earlier filing date under 35 USC 120 in which copies of the documents were previously furnished are set out below:

U.S. APPLICATIONS		STATUS *(check one)*		
U.S. APPLICATIONS	U.S. FILING OR 371(c) DATE	Patented	Pending	Abandoned
1. 16/246,938	Jan. 14, 2019	X		
2.				
3.				

Milwaukee Electric Tool Corporation
Ex-1020
Page 84 of 189

Fee Calculation

☒ **No fee** is owed by the applicant(s).

☐ IDS Fee (37 CFR 1.17(p)) $260.00

☐ Applicant(s) assert(s) small entity status. Therefore, the fee shown above is reduced by 50%, and the resulting fee is shown below.

☐ Applicant(s) certifies/certify micro entity status. Therefore, the fee shown above is reduced by 75%, and the resulting fee is shown below. Note: Form PTO/SB15A or B must either be enclosed or have been submitted previously

☒ **Total Fee Due** **$0.00**

Fee Payment

☐ Charge the indicated **Total Fee Due** to Deposit Account No. 12-1216.

☒ Charge any additional fees owed in connection with this communication to Deposit Account No. 12-1216.

☒ Credit any refund to Account No. 12-1216.

Leydig

/Elias P. Soupos/
Elias P. Soupos, Reg. No. 57,375
Telephone: 312-616-5600
Facsimile: 312-616-5700

Date: October 25, 2022

Milwaukee Electric Tool Corporation
Ex-1020
Page 85 of 189

UNITED STATES PATENT AND TRADEMARK OFFICE

UNITED STATES DEPARTMENT OF COMMERCE
United States Patent and Trademark Office
Address: COMMISSIONER FOR PATENTS
P.O. Box 1450
Alexandria, Virginia 22313-1450
www.uspto.gov

APPLICATION NUMBER	FILING OR 371(C) DATE	FIRST NAMED APPLICANT	ATTY. DOCKET NO./TITLE
17/856,628	07/01/2022	Shantanu Deshpande	763379

CONFIRMATION NO. 4418

PUBLICATION NOTICE

OC000000136745437

23460
LEYDIG VOIT & MAYER, LTD
TWO PRUDENTIAL PLAZA, SUITE 4900
180 NORTH STETSON AVENUE
CHICAGO, IL 60601-6731

Title:SAFETY HELMET

Publication No.US-2022-0346484-A1
Publication Date:11/03/2022

NOTICE OF PUBLICATION OF APPLICATION

The above-identified application will be electronically published as a patent application publication pursuant to 37 CFR 1.211, et seq. The patent application publication number and publication date are set forth above.

The publication may be accessed through the USPTO's publically available Searchable Databases via the Internet at www.uspto.gov. The direct link to access the publication is currently http://www.uspto.gov/patft/.

The publication process established by the Office does not provide for mailing a copy of the publication to applicant. A copy of the publication may be obtained from the Office upon payment of the appropriate fee set forth in 37 CFR 1.19(a)(1). Orders for copies of patent application publications are handled by the USPTO's Public Records Division. The Public Records Division can be reached by telephone at (571) 272-3150 or (800) 972-6382, by facsimile at (571) 273-3250, by mail addressed to the United States Patent and Trademark Office, Public Records Division, Alexandria, VA 22313-1450 or via the Internet.

In addition, information on the status of the application, including the mailing date of Office actions and the dates of receipt of correspondence filed in the Office, may also be accessed via the Internet through the Patent Electronic Business Center at www.uspto.gov using the public side of the Patent Application Information and Retrieval (PAIR) system. The direct link to access this status information is currently https://portal.uspto.gov/pair/PublicPair. Prior to publication, such status information is confidential and may only be obtained by applicant using the private side of PAIR.

Further assistance in electronically accessing the publication, or about PAIR, is available by calling the Patent Electronic Business Center at 1-866-217-9197.

Office of Data Managment, Application Assistance Unit (571) 272-4000, or (571) 272-4200, or 1-888-786-0101

UNITED STATES PATENT AND TRADEMARK OFFICE

UNITED STATES DEPARTMENT OF COMMERCE
United States Patent and Trademark Office
Address: COMMISSIONER FOR PATENTS
P.O. Box 1450
Alexandria, Virginia 22313-1450
www.uspto.gov

APPLICATION NO.	FILING DATE	FIRST NAMED INVENTOR	ATTORNEY DOCKET NO.	CONFIRMATION NO.
17/856,628	07/01/2022	Shantanu Deshpande	763379	4418

23460 7590 03/15/2024
LEYDIG VOIT & MAYER, LTD
TWO PRUDENTIAL PLAZA, SUITE 4900
180 NORTH STETSON AVENUE
CHICAGO, IL 60601-6731

EXAMINER
HOEY, ALISSA L

ART UNIT	PAPER NUMBER
3732	

NOTIFICATION DATE	DELIVERY MODE
03/15/2024	ELECTRONIC

Please find below and/or attached an Office communication concerning this application or proceeding.

The time period for reply, if any, is set in the attached communication.

Notice of the Office communication was sent electronically on above-indicated "Notification Date" to the following e-mail address(es):

Chgpatent@leydig.com

PTOL-90A (Rev. 04/07)

Office Action Summary	Application No. 17/856,628	Applicant(s) Deshpande et al.	
	Examiner ALISSA L HOEY	Art Unit 3732	AIA (FITF) Status Yes

-- The MAILING DATE of this communication appears on the cover sheet with the correspondence address --

Period for Reply

A SHORTENED STATUTORY PERIOD FOR REPLY IS SET TO EXPIRE 2 MONTHS FROM THE MAILING DATE OF THIS COMMUNICATION.

- Extensions of time may be available under the provisions of 37 CFR 1.136(a). In no event, however, may a reply be timely filed after SIX (6) MONTHS from the mailing date of this communication.
- If NO period for reply is specified above, the maximum statutory period will apply and will expire SIX (6) MONTHS from the mailing date of this communication.
- Failure to reply within the set or extended period for reply will, by statute, cause the application to become ABANDONED (35 U.S.C. § 133). Any reply received by the Office later than three months after the mailing date of this communication, even if timely filed, may reduce any earned patent term adjustment. See 37 CFR 1.704(b).

Status

1)☑ Responsive to communication(s) filed on 07/01/22.

☐ A declaration(s)/affidavit(s) under **37 CFR 1.130(b)** was/were filed on _____.

2a)☐ This action is **FINAL.** 2b) ☐ This action is non-final.

3)☐ An election was made by the applicant in response to a restriction requirement set forth during the interview on _____; the restriction requirement and election have been incorporated into this action.

4)☐ Since this application is in condition for allowance except for formal matters, prosecution as to the merits is closed in accordance with the practice under *Ex parte Quayle*, 1935 C.D. 11, 453 O.G. 213.

Disposition of Claims*

5) ☑ Claim(s) 21-39 is/are pending in the application.

5a) Of the above claim(s) _____ is/are withdrawn from consideration.

6) ☐ Claim(s) _____ is/are allowed.

7) ☐ Claim(s) _____ is/are rejected.

8) ☐ Claim(s) _____ is/are objected to.

9) ☑ Claim(s) 21-39 are subject to restriction and/or election requirement

* If any claims have been determined allowable, you may be eligible to benefit from the **Patent Prosecution Highway** program at a participating intellectual property office for the corresponding application. For more information, please see http://www.uspto.gov/patents/init_events/pph/index.jsp or send an inquiry to **PPHfeedback@uspto.gov.**

Application Papers

10)☐ The specification is objected to by the Examiner.

11)☐ The drawing(s) filed on _____ is/are: a)☐ accepted or b)☐ objected to by the Examiner.

Applicant may not request that any objection to the drawing(s) be held in abeyance. See 37 CFR 1.85(a).

Replacement drawing sheet(s) including the correction is required if the drawing(s) is objected to. See 37 CFR 1.121(d).

Priority under 35 U.S.C. § 119

12)☐ Acknowledgment is made of a claim for foreign priority under 35 U.S.C. § 119(a)-(d) or (f).

Certified copies:

a)☐ All b)☐ Some** c)☐ None of the:

1.☐ Certified copies of the priority documents have been received.

2.☐ Certified copies of the priority documents have been received in Application No. _____.

3.☐ Copies of the certified copies of the priority documents have been received in this National Stage application from the International Bureau (PCT Rule 17.2(a)).

** See the attached detailed Office action for a list of the certified copies not received.

Attachment(s)

1) ☐ Notice of References Cited (PTO-892)

2) ☐ Information Disclosure Statement(s) (PTO/SB/08a and/or PTO/SB/08b) Paper No(s)/Mail Date _____.

3) ☐ Interview Summary (PTO-413) Paper No(s)/Mail Date _____.

4) ☐ Other: _____.

DETAILED ACTION

Notice of Pre-AIA or AIA Status

The present application, filed on or after March 16, 2013, is being examined under the first inventor to file provisions of the AIA.

Restriction to one of the following inventions is required under 35 U.S.C. 121:

I. Claims 21-35, drawn to a helmet with an accessory, classified in A42B3/0406.

II. Claim 36-29, drawn to helmet, classified in A42B3/06.

Inventions I and II are related as mutually exclusive species in an intermediate-final product relationship. Distinctness is proven for claims in this relationship if the intermediate product is useful to make other than the final product, and the species are patentably distinct (MPEP § 806.05(j)). In the instant case, the intermediate product is deemed to be useful as a helmet with no accessories, while the final product requires a helmet and an accessory and the inventions are deemed patentably distinct because there is nothing of record to show them to be obvious variants.

Restriction for examination purposes as indicated is proper because all the inventions listed in this action are independent or distinct for the reasons given above <u>and</u> there would be a serious search and/or examination burden if restriction were not required because one or more of the following reasons apply:

- *the species or groupings of patentably indistinct species have acquired a separate status in the art in view of their different classification*
- *the species or groupings of patentably indistinct species require a different field of search (e.g., searching different classes /subclasses or electronic resources, or employing different search strategies or search queries).*

Here, the final product requires an accessory, while the intermediate product only requires a helmet. Therefore, different prior art and different searches would be needed to read on the claims.

Applicant is advised that the reply to this requirement to be complete must include (i) an election of an invention to be examined even though the requirement may be traversed (37 CFR 1.143) **and (ii) identification of the claims encompassing the elected invention**.

The election of an invention may be made with or without traverse. To reserve a right to petition, the election must be made with traverse. If the reply does not distinctly and specifically point out supposed errors in the restriction requirement, the election shall be treated as an election without traverse. Traversal must be presented at the time of election in order to be considered timely. Failure to timely traverse the requirement will result in the loss of right to petition under 37 CFR 1.144. If claims are added after the election, applicant must indicate which of these claims are readable upon the elected invention.

Should applicant traverse on the ground that the inventions are not patentably distinct, applicant should submit evidence or identify such evidence now of record showing the inventions to be obvious variants or clearly admit on the record that this is the case. In either instance, if the examiner finds one of the inventions unpatentable over the prior art, the evidence or admission may be used in a rejection under 35 U.S.C. 103 or pre-AIA 35 U.S.C. 103(a) of the other invention.

Election of Species

Claim(s) 21-39 is/are generic to the following disclosed patentably distinct species:

A) Figures 1-6 and 9-13: side accessory slot: 6, no side lights

B) Figure 7: side lights: 210

The species are independent or distinct because as disclosed the different species have mutually exclusive characteristics for each identified species. In addition, these species are not obvious variants of each other based on the current record.

Applicant is required under 35 U.S.C. 121 to elect a single disclosed species, or a single grouping of patentably indistinct species, for prosecution on the merits to which the claims shall be restricted if no generic claim is finally held to be allowable.

There is a serious search and/or examination burden for the patentably distinct species as set forth above because at least the following reason(s) apply:

- *the species or groupings of patentably indistinct species have acquired a separate status in the art in view of their different classification*
- *the species or groupings of patentably indistinct species require a different field of search (e.g., searching different classes /subclasses or electronic resources, or employing different search strategies or search queries).*

Applicant is advised that the reply to this requirement to be complete must include (i) an election of a species or a grouping of patentably indistinct species to be examined even though the requirement may be traversed (37 CFR 1.143) **and (ii) identification of the claims encompassing the elected species** or grouping of patentably indistinct species, including any claims subsequently added. An argument that a claim is allowable or that all claims are generic is considered nonresponsive unless accompanied by an election.

The election may be made with or without traverse. To preserve a right to petition, the election must be made with traverse. If the reply does not distinctly and specifically point out supposed errors in the election of species requirement, the election shall be treated as an election without traverse. Traversal must be presented at the time of election in order to be considered timely. Failure to timely traverse the requirement will result in the loss of right to petition under 37 CFR 1.144. If claims are added after the election, applicant must indicate

which of these claims are readable on the elected species or grouping of patentably indistinct species.

Should applicant traverse on the ground that the species, or groupings of patentably indistinct species from which election is required, are not patentably distinct, applicant should submit evidence or identify such evidence now of record showing the species to be obvious variants or clearly admit on the record that this is the case. In either instance, if the examiner finds one of the species unpatentable over the prior art, the evidence or admission may be used in a rejection under 35 U.S.C. 103 or pre-AIA 35 U.S.C. 103(a) of the other species.

Upon the allowance of a generic claim, applicant will be entitled to consideration of claims to additional species which depend from or otherwise require all the limitations of an allowable generic claim as provided by 37 CFR 1.141.

A telephone call was not made to Applicant to request an oral election to the above restriction requirement, due to the complex nature of the requirement as detailed above.

Applicant is reminded that upon the cancelation of claims to a non-elected invention, the inventorship must be corrected in compliance with 37 CFR 1.48(a) if one or more of the currently named inventors is no longer an inventor of at least one claim remaining in the application. A request to correct inventorship under 37 CFR 1.48(a) must be accompanied by an application data sheet in accordance with 37 CFR 1.76 that identifies each inventor by his or her legal name and by the processing fee required under 37 CFR 1.17(i).

Conclusion

Any inquiry concerning this communication or earlier communications from the examiner should be directed to ALISSA L HOEY whose telephone number is (571)272-4985. The examiner can normally be reached M-F 9:00-5:30 ET.

Examiner interviews are available via telephone, in-person, and video conferencing using a USPTO supplied web-based collaboration tool. To schedule an interview, applicant is

encouraged to use the USPTO Automated Interview Request (AIR) at http://www.uspto.gov/interviewpractice.

If attempts to reach the examiner by telephone are unsuccessful, the examiner's supervisor, Clinton T Ostrup can be reached on (571)272-5559. The fax phone number for the organization where this application or proceeding is assigned is 571-273-8300.

Information regarding the status of published or unpublished applications may be obtained from Patent Center. Unpublished application information in Patent Center is available to registered users. To file and manage patent submissions in Patent Center, visit: https://patentcenter.uspto.gov. Visit https://www.uspto.gov/patents/apply/patent-center for more information about Patent Center and https://www.uspto.gov/patents/docx for information about filing in DOCX format. For additional questions, contact the Electronic Business Center (EBC) at 866-217-9197 (toll-free). If you would like assistance from a USPTO Customer Service Representative, call 800-786-9199 (IN USA OR CANADA) or 571-272-1000.

ALISSA L. HOEY
Primary Examiner
Art Unit 3732

/ALISSA L HOEY/
Primary Examiner, Art Unit 3732

PTO/SB/06 (09-11)
Approved for use through 1/31/2014. OMB 0651-0032
U.S. Patent and Trademark Office; U.S. DEPARTMENT OF COMMERCE
Under the Paperwork Reduction Act of 1995, no persons are required to respond to a collection of information unless it displays a valid OMB control number.

PATENT APPLICATION FEE DETERMINATION RECORD Substitute for Form PTO-875	Application or Docket Number 17/856,628	Filing Date 07/01/2022	☐ To be Mailed

ENTITY: ☑ LARGE ☐ SMALL ☐ MICRO

APPLICATION AS FILED - PART I

FOR	(Column 1) NUMBER FILED	(Column 2) NUMBER EXTRA		RATE ($)	FEE ($)
☐ BASIC FEE (37 CFR 1.16(a), (b), or (c))	N/A	N/A		N/A	
☐ SEARCH FEE (37 CFR 1.16(k), (i), or (m))	N/A	N/A		N/A	
☐ EXAMINATION FEE (37 CFR 1.16(o), (p), or (q))	N/A	N/A		N/A	
TOTAL CLAIMS (37 CFR 1.16(i))	minus 20 =	*		x $100 =	
INDEPENDENT CLAIMS (37 CFR 1.16(h))	minus 3 =	*		x $480 =	
☐ APPLICATION SIZE FEE (37 CFR 1.16(s))	If the specification and drawings exceed 100 sheets of paper, the application size fee due is $310 ($155 for small entity) for each additional 50 sheets or fraction thereof. See 35 U.S.C. 41(a)(1)(G) and 37 CFR 1.16(s).				
☐ MULTIPLE DEPENDENT CLAIM PRESENT (37 CFR 1.16(j))					
* If the difference in column 1 is less than zero, enter "0" in column 2.				TOTAL	

APPLICATION AS AMENDED - PART II

AMENDMENT	07/15/2024	(Column 1) CLAIMS REMAINING AFTER AMENDMENT		(Column 2) HIGHEST NUMBER PREVIOUSLY PAID FOR	(Column 3) PRESENT EXTRA		RATE ($)	ADDITIONAL FEE ($)
	Total (37 CFR 1.16(i))	* 19	Minus	** 20	= 0		x $100 =	0
	Independent (37 CFR 1.16(h))	* 3	Minus	*** 3	= 0		x $480 =	0
	☐ Application Size Fee (37 CFR 1.16(s))							
	☐ FIRST PRESENTATION OF MULTIPLE DEPENDENT CLAIM (37 CFR 1.16(j))							
							TOTAL ADD'L FEE	0

AMENDMENT		(Column 1) CLAIMS REMAINING AFTER AMENDMENT		(Column 2) HIGHEST NUMBER PREVIOUSLY PAID FOR	(Column 3) PRESENT EXTRA		RATE ($)	ADDITIONAL FEE ($)
	Total (37 CFR 1.16(i))	*	Minus	**	=		x $0 =	
	Independent (37 CFR 1.16(h))	*	Minus	***	=		x $0 =	
	☐ Application Size Fee (37 CFR 1.16(s))							
	☐ FIRST PRESENTATION OF MULTIPLE DEPENDENT CLAIM (37 CFR 1.16(j))							
							TOTAL ADD'L FEE	

* If the entry in column 1 is less than the entry in column 2, write "0" in column 3.	LIE
** If the "Highest Number Previously Paid For" IN THIS SPACE is less than 20, enter "20".	/ALANE C PUGH/
*** If the "Highest Number Previously Paid For" IN THIS SPACE is less than 3, enter "3".	
The "Highest Number Previously Paid For" (Total or Independent) is the highest number found in the appropriate box in column 1.	

This collection of information is required by 37 CFR 1.16. The information is required to obtain or retain a benefit by the public which is to file (and by the USPTO to process) an application. Confidentiality is governed by 35 U.S.C. 122 and 37 CFR 1.14. This collection is estimated to take 12 minutes to complete, including gathering, preparing, and submitting the completed application form to the USPTO. Time will vary depending upon the individual case. Any comments on the amount of time you require to complete this form and/or suggestions for reducing this burden, should be sent to the Chief Information Officer, U.S. Patent and Trademark Office, U.S. Department of Commerce, P.O. Box 1450, Alexandria, VA 22313-1450. DO NOT SEND FEES OR COMPLETED FORMS TO THIS ADDRESS. **SEND TO: Commissioner for Patents, P.O. Box 1450, Alexandria, VA 22313-1450.**

If you need assistance in completing the form, call 1-800-PTO-9199 and select option 2.

UNITED STATES
PATENT AND TRADEMARK OFFICE

P.O. Box 1450
Alexandria, VA 22313 - 1450
www.uspto.gov

ELECTRONIC ACKNOWLEDGEMENT RECEIPT

APPLICATION #	RECEIPT DATE / TIME	ATTORNEY DOCKET #
17/856,628	**07/15/2024 02:21:03 PM Z ET**	**763379**

Title of Invention

SAFETY HELMET

Application Information

APPLICATION TYPE	Utility - Nonprovisional Application under 35 USC 111(a)	PATENT #	-
CONFIRMATION #	4418	FILED BY	John Whelan
PATENT CENTER #	66365212	FILING DATE	07/01/2022
CUSTOMER #	23460	FIRST NAMED INVENTOR	Shantanu Deshpande
CORRESPONDENCE ADDRESS	-	AUTHORIZED BY	-

Documents

TOTAL DOCUMENTS: 1

DOCUMENT	PAGES	DESCRIPTION	SIZE (KB)
00016P01USRestrictionResponse-APP.TEXT.docx	8	Application body structured text document	33 KB

Warning: The automatic document description has been replaced.

Digest

DOCUMENT	MESSAGE DIGEST(SHA-512)
00016P01USRestrictionResponse-APP.TEXT.docx	9277F8DB65940171533F1C8E612C0E54DC8AB92B6FFDD6E258E17BE9A7CEA11C6AAAD20C61A969DAA2310506E13712817E6736196AE9A994699D7DAE49B61422

This Acknowledgement Receipt evidences receipt on the noted date by the USPTO of the indicated documents, characterized

by the applicant, and including page counts, where applicable. It serves as evidence of receipt similar to a Post Card, as described in MPEP 503.

New Applications Under 35 U.S.C. 111

If a new application is being filed and the application includes the necessary components for filing date (see 37 CFR 1.53(b)-(d) and MPEP 506), a Filing Receipt (37 CFR 1.54) will be issued in due course and the date shown on this Acknowledgement Receipt will establish the filing date of the application

National Stage of an International Application under 35 U.S.C. 371

If a timely submission to enter the national stage of an international application is compliant with the conditions of 35 U.S.C. 371 and other applicable requirements a Form PCT/DO/EO/903 indicating acceptance of the application as a national stage submission under 35 U.S.C. 371 will be issued in addition to the Filing Receipt, in due course.

New International Application Filed with the USPTO as a Receiving Office

If a new international application is being filed and the international application includes the necessary components for an international filing date (see PCT Article 11 and MPEP 1810), a Notification of the International Application Number and of the International Filing Date (Form PCT/RO/105) will be issued in due course, subject to prescriptions concerning national security, and the date shown on this Acknowledgement Receipt will establish the international filing date of the application.

UNITED STATES
PATENT AND TRADEMARK OFFICE

P.O. Box 1450
Alexandria, VA 22313 - 1450
www.uspto.gov

ELECTRONIC PAYMENT RECEIPT

APPLICATION #	RECEIPT DATE / TIME	ATTORNEY DOCKET #
17/856,628	07/15/2024 02:21:03 PM Z ET	763379

Title of Invention

SAFETY HELMET

Application Information

APPLICATION TYPE	Utility - Nonprovisional Application under 35 USC 111(a)	PATENT #	-
CONFIRMATION #	4418	FILED BY	John Whelan
PATENT CENTER #	66365212	AUTHORIZED BY	-
CUSTOMER #	23460	FILING DATE	07/01/2022
CORRESPONDENCE ADDRESS	-	FIRST NAMED INVENTOR	Shantanu Deshpande

Payment Information

PAYMENT METHOD	PAYMENT TRANSACTION ID	PAYMENT AUTHORIZED BY
DA / 602056	E20247EE23597756	John Whelan
PRE-AUTHORIZED ACCOUNT	PRE-AUTHORIZED CATEGORY	
602056	37 CFR 1.17 (Patent application and reexamination processing fees)	

FEE CODE	DESCRIPTION	ITEM PRICE($)	QUANTITY	ITEM TOTAL($)
1252	EXTENSION FOR RESPONSE WITHIN SECOND MONTH	640.00	1	640.00
			TOTAL AMOUNT:	$640.00

This Acknowledgement Receipt evidences receipt on the noted date by the USPTO of the indicated documents, characterized by the applicant, and including page counts, where applicable. It serves as evidence of receipt similar to a Post Card, as described in MPEP 503.

New Applications Under 35 U.S.C. 111

If a new application is being filed and the application includes the necessary components for filing date (see 37 CFR 1.53(b)-(d) and MPEP 506), a Filing Receipt (37 CFR 1.54) will be issued in due course and the date shown on this Acknowledgement Receipt will establish the filing date of the application

National Stage of an International Application under 35 U.S.C. 371

If a timely submission to enter the national stage of an international application is compliant with the conditions of 35 U.S.C. 371 and other applicable requirements a Form PCT/DO/EO/903 indicating acceptance of the application as a national stage submission under 35 U.S.C. 371 will be issued in addition to the Filing Receipt, in due course.

New International Application Filed with the USPTO as a Receiving Office

If a new international application is being filed and the international application includes the necessary components for an international filing date (see PCT Article 11 and MPEP 1810), a Notification of the International Application Number and of the International Filing Date (Form PCT/RO/105) will be issued in due course, subject to prescriptions concerning national security, and the date shown on this Acknowledgement Receipt will establish the international filing date of the application.

IN THE UNITED STATES PATENT AND TRADEMARK OFFICE

Patent Application No. 17/856,628

Confirmation No. 4418

Art Unit: 3732

Filed: 07/01/2022

Attorney Docket No. 763379

RESPONSE TO OFFICE ACTION

Commissioner for Patents
P.O. Box 1450
Alexandria VA 22313-1450

Commissioner:

Responsive to the Office Action dated March 15, 2024, please enter the following amendments and consider the following remarks.

Amendments to the Claims are reflected in the listing of claims which begins on page 2 of this paper.

Remarks/Arguments begin on page 7 of this paper.

AMENDMENTS TO THE CLAIMS

This listing of claims replaces all prior versions, and listings, of claims in the application.

What is claimed is:

1-20. (Cancelled).

21. (Previously Presented) A safety helmet system, comprising:

a safety helmet comprising:

a molded outer shell adapted to be worn by a user, the outer shell having an exterior surface defining a front side, a rear side, and a brim extending forward from the front side;

a front receptacle having a first pair of external slots and a stop, wherein each of the first pair of external slots extends upwardly along the front side of the outer shell and the stop is disposed between the first pair of external slots, and wherein the stop is integrally molded with the exterior surface of the outer shell; and

a rear receptacle disposed on the rear side on the exterior surface of the outer shell, the rear receptacle having a second pair of external slots; and

an accessory device having a mating receptacle formed thereon, at least a portion of the mating receptacle being selectively engageable with the front receptacle or the rear receptacle such that the accessory device is releasably mountable onto each of the front receptacle and the rear receptacle.

22. (Previously Presented) The safety helmet system of claim 21, wherein the stop includes a protruding member, and wherein the protruding member is integrally molded from a plastic material with the outer shell.

23. (Previously Presented) The safety helmet system of claim 21, wherein each of the first pair of external slots of the front receptacle is a receiver slot flanked by raised walls, and the stop

comprises a protruding member, wherein the accessory device includes a clip, and wherein the receiver slot aligns the accessory device therein, the raised walls retain the accessory device therebetween, and the protruding member engages the clip to releasably mount the accessory device in the front receptacle.

24. (Previously Presented) The safety helmet system of claim 21, wherein the outer shell, the front receptacle, and the rear receptacle are formed from a common material.

25. (Previously Presented) The safety helmet system of claim 24, wherein the common material is plastic.

26. (Previously Presented) The safety helmet system of claim 21, further including a second accessory device having a second mating receptacle formed thereon, at least a portion of the second accessory device being releasably mountable onto each of the front receptacle or the rear receptacle on the exterior of the outer shell.

27. (Previously Presented) The safety helmet of claim 21, wherein:

each of the first pair of external slots includes a first sidewall, which define a pair of first sidewalls;

the accessory device includes a bracket; and

the bracket is retained by the pair of first sidewalls to mount the accessory device to the front receptacle.

28. (Previously Presented) The safety helmet of claim 27, wherein:

each of the first pair of external slots includes a second sidewall, which define a pair of second sidewalls; and

the bracket is retained by the pair of first sidewalls and the pair of second sidewalls.

29. (Previously Presented) A safety helmet system, comprising:

a safety helmet comprising:

an outer shell adapted to be worn by a user, an exterior of the outer shell having a front side, a rear side, and a brim extending outwardly from the front side;

at least one receptacle having two external slots and a stop on the exterior of the outer shell, each of the external slots extending upwardly on at least one of the front side or the rear side along the exterior of the outer shell on either side of the stop, wherein the outer shell forms the stop from a same material as the outer shell; and

an accessory device having a mating receptacle formed thereon, at least a portion of the mating receptacle being selectively engageable with the at least one receptacle such that the accessory device is releasably mountable onto the exterior of the outer shell.

30. (Previously Presented) The safety helmet system of claim 29, wherein each of the first pair of external slots of the at least one receptacle is a receiver slot flanked by raised walls and the stop comprises a protruding member, wherein the accessory device includes a clip, and wherein the receiver slot aligns the accessory device therein, the raised walls retain the accessory device therebetween, and the stop engages the clip to releasably mount the accessory device in the at least one receptacle.

31. (Previously Presented) The safety helmet system of claim 29, wherein the at least one receptacle is a front receptacle disposed on the front side, and wherein the outer shell further includes a rear receptacle having an identical construction to the front receptacle, the rear receptacle being disposed on the rear side of the outer shell.

32. (Previously Presented) The safety helmet system of claim 29, wherein the same material is plastic.

33. (Previously Presented) The safety helmet system of claim 31, further including a second accessory device having a second mating receptacle formed thereon, at least a portion of the second accessory device being releasably mountable onto either of the front receptacle and the rear receptacle on the exterior of the outer shell.

34. (Previously Presented) The safety helmet system of claim 29, wherein:

each of the two external slots of the at least one receptacle includes a first sidewall, which define a pair of first sidewalls;

the accessory device includes a bracket; and

the bracket is retained by the pair of first sidewalls to mount the accessory device to the at least one receptacle.

35. (Previously Presented) The safety helmet system of claim 34, wherein:

each of the two external slots of the at least one receptacle includes a second sidewall, which define a pair of second sidewalls; and

the bracket is retained by the pair of first sidewalls and the pair of second sidewalls.

36. (Withdrawn) A safety helmet, comprising:

an outer shell adapted to be worn by a user, an exterior of the outer shell having a front side, a rear side, and a brim extending outwardly from the front side;

a front receptacle having a first external slot and a first stop;

a rear receptacle disposed on the rear side on the exterior of the outer shell, the rear receptacle including a second external slot and a second stop;

wherein the outer shell forms the first stop and the second stop from a same material as the outer shell; and

wherein each of the front receptacle and the rear receptacle is adapted to receive therein an accessory device, the accessory device configured to have a mating receptacle formed thereon such that at least a portion of the mating receptacle is selectively engageable with the front

receptacle or the rear receptacle, wherein the accessory device is adapted to be releasably mountable onto each of the front receptacle and the rear receptacle on the exterior of the outer shell.

37. (Withdrawn) The safety helmet of claim 36, wherein the first external slot of the front receptacle is a receiver slot flanked by raised walls and the stop comprises a stop member, wherein the accessory device includes a clip having a stop surface, and wherein the receiver slot aligns the accessory device therein, the raised walls retain the accessory device therebetween, and the stop member engages the stop surface to releasably mount the accessory device in the front receptacle.

38. (Withdrawn) The safety helmet of claim 36, wherein:

the first external slot includes a first sidewall;

the accessory device is adapted to include a bracket; and

the bracket is adapted to be retained by the first sidewall to releasably mount the accessory device to the front receptacle.

39. (Withdrawn) The safety helmet of claim 36, wherein:

the first external slot includes a second sidewall; and

the bracket is adapted retained by the first sidewall and the second sidewall.

1. REMARKS/ARGUMENTS

Status of the Claims

Claims 21-35 are pending in the application.

Claims 36-39 are withdrawn.

First Election

In the Office Action, the requirement for election as between the following species was set forth:

I. Claims 21-35, drawn to a helmet with an accessory, classified in A42B3/0406.

II. Claim 36-29, drawn to helmet, classified in A42B3/06.

(Office Action, p. 2).

To advance prosecution, Applicant hereby provisionally elects species I for prosecution. Claims 21-35 read on the elected species.

Second Election

In the Office Action, the requirement for election as between the following species was set forth:

A) Figures 1-6 and 9-13: side accessory slot: 6, no side lights

B) Figure 7: side lights: 210

(Office Action, p. 3).

To advance prosecution, Application hereby provisionally elects species A for prosecution. Claims 21-39 read on the elected species. The Office Action alleges that species A and species B "are independent or distinct because as disclosed the different species have mutually exclusive characteristics for each identifies species." (Office Action, p.3). Applicant submits that nowhere in in the application does it suggest that the features cited in the Office Action as pertaining to species A and/or B are mutually exclusive. While not labeled in Fig. 7, Fig. 7 shows the accessory slot 6, similar to the accessory slot 6 labeled in, for example, Figs. 9,

10, etc. It is not clear why the Office Action alleges that these features are mutually exclusive. However, Applicant would like to note that none of the pending claims recite the side lights feature indicated as species B in the Office Action, therefore all pending claims encompass the provisionally elected species.

Conclusion

In view of the foregoing amendments and remarks, each of the presently pending claims are in condition for allowance, and allowance is requested. If, in the opinion of the Examiner, a telephone conference would expedite the prosecution of the present application, the Examiner is invited to call the undersigned attorney.

/John Whelan/
John Whelan, Reg. No. 76,200
Telephone: 847-821-3289

Date: 7/15/2024

Notice of References Cited	Application/Control No. 17/856,628	Applicant(s)/Patent Under Reexamination Deshpande et al.	
	Examiner ALISSA L HOEY	Art Unit 3732	Page 1 of 2

U.S. PATENT DOCUMENTS

*		Document Number Country Code-Number-Kind Code	Date YYYY-MM-DD	Name	CPC Classification	US Classification
*	A	US-11937660-B2	2024-03-26	Zeilinger; Todd Andrew	A42B3/185	1/1
*	B	US-11452327-B2	2022-09-27	Deshpande; Shantanu	A42B3/0446	1/1
*	C	US-9047790-B1	2015-06-02	Duderstadt; James Louis	G09F3/207	1/1
*	D	US-8191292-B2	2012-06-05	Cummings; Timothy Alan	G09F3/20	40/329
*	E	US-20110113529-A1	2011-05-19	MILIOTO; Giuseppe Dino	A42B3/04	24/3.12
*	F	US-20170303619-A1	2017-10-26	Silva; Luciano	A42B3/04	1/1
*	G	US-9918506-B2	2018-03-20	Tatum; Glenn	A42B3/22	1/1
*	H	US-20240081459-A1	2024-03-14	Worple; Joseph R.	A42B3/128	1/1
*	I	US-11266199-B2	2022-03-08	Wong; Kingston T.	A42B3/0406	1/1
*	J	US-8193940-B2	2012-06-05	Cummings; Timothy Alan	A42B3/04	340/572.1
*	K	US-9507245-B1	2016-11-29	Druker; Joshua Todd	F16M13/02	1/1
*	L	US-20150286117-A1	2015-10-08	SUNG; Alexander	F16M11/041	248/220.22
*	M	US-9377672-B1	2016-06-28	Clearman; Christopher Aaron	A45F5/02	1/1

FOREIGN PATENT DOCUMENTS

*		Document Number Country Code-Number-Kind Code	Date YYYY-MM-DD	Country	Name	CPC Classification
	N					
	O					
	P					
	Q					
	R					
	S					
	T					

NON-PATENT DOCUMENTS

*		Include as applicable: Author, Title Date, Publisher, Edition or Volume, Pertinent Pages)
	U	
	V	
	W	
	X	

*A copy of this reference is not being furnished with this Office action. (See MPEP § 707.05(a).)
Dates in YYYY-MM-DD format are publication dates. Classifications may be US or foreign.

Notice of References Cited	Application/Control No. 17/856,628	Applicant(s)/Patent Under Reexamination Deshpande et al.	
	Examiner ALISSA L HOEY	Art Unit 3732	Page 2 of 2

U.S. PATENT DOCUMENTS

*		Document Number Country Code-Number-Kind Code	Date YYYY-MM-DD	Name	CPC Classification	US Classification
*	A	US-20140321843-A1	2014-10-30	Hulse; Tim	F16M13/00	396/420
*	B	US-11231056-B2	2022-01-25	Toner; Stephen John	F16M13/02	1/1
*	C	US-10021931-B2	2018-07-17	Tulley; Eric Brock	A42B3/042	1/1
	D					
	E					
	F					
	G					
	H					
	I					
	J					
	K					
	L					
	M					

FOREIGN PATENT DOCUMENTS

*		Document Number Country Code-Number-Kind Code	Date YYYY-MM-DD	Country	Name	CPC Classification
	N					
	O					
	P					
	Q					
	R					
	S					
	T					

NON-PATENT DOCUMENTS

*		Include as applicable: Author, Title Date, Publisher, Edition or Volume, Pertinent Pages)
	U	
	V	
	W	
	X	

*A copy of this reference is not being furnished with this Office action. (See MPEP § 707.05(a).)
Dates in YYYY-MM-DD format are publication dates. Classifications may be US or foreign.

Index of Claims	Application/Control No.	Applicant(s)/Patent Under Reexamination
	17/856,628	Deshpande et al.
	Examiner	**Art Unit**
	ALISSA L HOEY	3732

✓	Rejected	-	Cancelled	N	Non-Elected	A	Appeal
=	Allowed	÷	Restricted	I	Interference	O	Objected

CLAIMS

☐ Claims renumbered in the same order as presented by applicant ☐ CPA ☐ T.D. ☐ R.1.47

CLAIM		DATE								
Final	Original	07/30/2024								
	1	-								
	2	-								
	3	-								
	4	-								
	5	-								
	6	-								
	7	-								
	8	-								
	9	-								
	10	-								
	11	-								
	12	-								
	13	-								
	14	-								
	15	-								
	16	-								
	17	-								
	18	-								
	19	-								
	20	-								
	21	✓								
	22	✓								
	23	✓								
	24	✓								
	25	✓								
	26	✓								
	27	✓								
	28	✓								
	29	✓								
	30	✓								
	31	✓								
	32	✓								
	33	✓								
	34	✓								
	35	✓								
	36	N								
	37	N								
	38	N								
	39	N								

Search Notes	Application/Control No.	Applicant(s)/Patent Under Reexamination
	17/856,628	Deshpande et al.
	Examiner	**Art Unit**
	ALISSA L HOEY	3732

CPC - Searched*		
Symbol	**Date**	**Examiner**
A42B3/0446; A42B3/044; A42B3/0406; A42B3/042	07/30/2024	ALH

CPC Combination Sets - Searched*		
Symbol	**Date**	**Examiner**

US Classification - Searched*			
Class	**Subclass**	**Date**	**Examiner**

* See search history printout included with this form or the SEARCH NOTES box below to determine the scope of the search.

Search Notes		
Search Notes	**Date**	**Examiner**
AI Similarity Search	07/30/2024	ALH
PE2E Word Search, see for details	07/30/2024	ALH

Interference Search			
US Class/CPC Symbol	**US Subclass/CPC Group**	**Date**	**Examiner**

/ALISSA L HOEY/ Primary Examiner, Art Unit 3732	

PE2E SEARCH - Search History (Prior Art)

Ref #	Hits	Search Query	DBs	Default Operator	Plurals	British Equivalents	Time Stamp
L1	44	("10886646"|"1947786"|"20080263752"|"20100083413"|"20110072562"|"20120224356"|"20120317706"|"20130086722"|"20140000013"|"20140000014"|"20140020159"|"20180192727"|"20190101359"|"20190104797"|"20200329806"|"5688039"|"9814622"|"10743599"|"11019870"|"20020116749"|"20120320569"|"20160242483"|"20160249700"|"20170238642"|"20180128459"|"20180249779"|"20190098952"|"20190104797"|"20190107247"|"20190350291"|"20190350292"|"20200170329"|"20200268088"|"4521831"|"5026016"|"6497493"|"6532601"|"6616294"|"6701649"|"6811348"|"8060951"|"9702534"|"9872531"|"20190008228").PN.	(US-PGPUB; USPAT; USOCR)	OR	ON	ON	2024/07/29 09:03 AM
L2	37	("4002895" | "4521831" | "5683831" | "6811348" | "6957449" | "7963426" | "7996917" | "8117676" | "8677516" | "8908389" | "9047790" | "9101175" | "9532621" | "9702534" | "9829182" | "10334902" | "20060174401" | "20070212930" | "20090077721" | "20110252546" | "20120182748" | "20120320569" | "20130086722" | "20130194784" | "20140000013" | "20140130241" | "20150223540" | "20150305425" | "20160208982" | "20170303619" | "20180292178" |	(US-PGPUB; USPAT; USOCR)	OR	ON	ON	2024/07/29 09:22 AM

		"20190231016" | "20200329806" | "20200366872").pn. OR ("11019870").urpn. AND (PGPB | USPT | USOC).dbnm.					
L3	7	("2020/0329806").urpn. AND (PGPB | USPT | USOC).dbnm.	(US-PGPUB; USPAT; USOCR)	OR	ON	ON	2024/07/29 09:40 AM
L4	78	("3273163" | "D268300" | "4479738" | "D288162" | "4729706" | "D302568" | "D310624" | "5168605" | "D339521" | "D358567" | "5658065" | "D404038" | "D433563" | "D459273" | "D465400" | "D465525" | "6616294" | "6854946" | "D509471" | "D511713" | "D522849" | "D562124" | "D565662" | "D574226" | "D589338" | "7630745" | "D627621" | "7832606" | "7878745" | "8191292" | "D674274" | "8360378" | "D685991" | "D686409" | "8919622" | "8919623" | "D741554" | "9185953" | "D745776" | "9223190" | "D748461" | "9249814" | "9267529" | "D751889" | "9291179" | "9375075" | "D762968" | "D762969" | "D762970" | "D763673" | "9474334" | "D770167" | "D770168" | "D770169" | "D778508" | "D790332" | "9756890" | "D799312" | "9844238" | "D807029" | "D807634" | "D822473" | "D854311" | "10383385" | "D863287" | "D877492" | "D879086" | "10712127" | "10736406" | "10782094" | "20110113529" | "20130180033" | "20200329806").pn. OR ("D932292").urpn. AND (PGPB | USPT | USOC).dbnm.	(US-PGPUB; USPAT; USOCR)	OR	ON	ON	2024/07/29 09:40 AM
L5	0	2017/030619	(US-PGPUB)	OR	ON	ON	2024/07/29

							09:46 AM
L6	1	"20170303619"	(US-PGPUB)	OR	ON	ON	2024/07/29 09:46 AM
L7	6	((US-11937660-B2 OR US-11452327-B2 OR US-9047790-B1 OR US-8191292-B2).did. AND USPT.dbnm.) OR ((US-20110113529-A1 OR US-20170303619-A1).did. AND PGPB.dbnm.)	(US-PGPUB; USPAT; USOCR; FIT (CA, JP); FPRS; EPO; JPO; DERWENT; IBM_TDB)	OR	ON	ON	2024/07/29 09:58 AM
L8	49	("0836481" | "1580496" | "2532132" | "2538386" | "2623316" | "2839857" | "2895241" | "2935804" | "3438062" | "3846925" | "4011672" | "4170080" | "4667274" | "4967499" | "5189822" | "5276985" | "5452479" | "5687496" | "5829063" | "5915539" | "6032394" | "6076295" | "D445262" | "6293038" | "6298591" | "6625913" | "6643847" | "6742294" | "7055275" | "7093305" | "7117621" | "D545573" | "7877909" | "8104208" | "20060272189" | "20080172776").pn. OR ("9047790").urpn. AND (PGPB | USPT | USOC).dbnm.	(US-PGPUB; USPAT; USOCR)	OR	ON	ON	2024/07/29 10:36 AM
L9	6	((US-11937660-B2 OR US-11452327-B2 OR US-9047790-B1 OR US-8191292-B2).did. AND USPT.dbnm.) OR ((US-20110113529-A1 OR US-20170303619-A1).did. AND PGPB.dbnm.)	(US-PGPUB; USPAT; USOCR; FIT (CA, JP); FPRS; EPO; JPO; DERWENT; IBM_TDB)	OR	ON	ON	2024/07/29 12:36 PM
L10	44	("1947786" | "4521831" | "5026016" | "5688039" | "6497493" | "6532601" | "6616294" | "6701649" | "6811348" | "8060951" | "9702534" | "9814622" | "9872531" | "10743599" | "10886646" | "11019870" | "20020116749" | "20080263752" | "20100083413" |	(US-PGPUB; USPAT; USOCR)	OR	ON	ON	2024/07/29 12:36 PM

		"20110072562" | "20120224356" | "20120317706" | "20120320569" | "20130086722" | "20140000013" | "20140000014" | "20140020159" | "20160242483" | "20160249700" | "20170238642" | "20180128459" | "20180192727" | "20180249779" | "20190008228" | "20190098952" | "20190101359" | "20190104797" | "20190107247" | "20190350291" | "20190350292" | "20200170329" | "20200268088" | "20200329806").pn. AND (PGPB | USPT | USOC).dbnm.					
L11	337	(A42B3/0446).cpc.	(US-PGPUB; USPAT; USOCR; FPRS; EPO; JPO)	OR	ON	ON	2024/07/29 12:46 PM
L12	2201	(A42B3/0446).cpc. OR (A42B3/044).cpc.	(US-PGPUB; USPAT; USOCR; FPRS; EPO; JPO)	OR	ON	ON	2024/07/29 12:46 PM
L13	519	L12 AND (slot OR wall OR nub OR protrusion)	(US-PGPUB; USPAT; USOCR; FPRS; EPO; JPO)	OR	ON	ON	2024/07/29 12:46 PM
L14	2089	(A42B3/0406).cpc.	(US-PGPUB; USPAT; USOCR; FPRS; EPO; JPO)	OR	ON	ON	2024/07/29 01:02 PM
L15	372	L14 AND (protrusion OR nub OR slot)	(US-PGPUB; USPAT; USOCR; FPRS; EPO; JPO)	OR	ON	ON	2024/07/29 01:02 PM
L16	8	("4238857" | "RE33286" | "5425620" | "5577495" | "D617396" | "20110231977" | "20110318197").pn. OR ("11266199").urpn. AND (PGPB | USPT | USOC).dbnm.	(US-PGPUB; USPAT; USOCR)	OR	ON	ON	2024/07/29 01:05 PM
L17	15	("3813696" | "3881198" | "4672968" | "4893356" | "5561862" | "5878742" | "9161587" | "9241529" | "9510632" | "10945481" |	(US-PGPUB; USPAT; USOCR)	OR	ON	ON	2024/07/29 01:06 PM

		"20070061946" | "20080295220" | "20130160195" | "20140143934" | "20160338427").pn. OR ("11241060").urpn. AND (PGPB | USPT | USOC).dbnm.					
L18	49	("0836481" | "1580496" | "2532132" | "2538386" | "2623316" | "2839857" | "2895241" | "2935804" | "3438062" | "3846925" | "4011672" | "4170080" | "4667274" | "4967499" | "5189822" | "5276985" | "5452479" | "5687496" | "5829063" | "5915539" | "6032394" | "6076295" | "D445262" | "6293038" | "6298591" | "6625913" | "6643847" | "6742294" | "7055275" | "7093305" | "7117621" | "D545573" | "7877909" | "8104208" | "20060272189" | "20080172776").pn. OR ("9047790").urpn. AND (PGPB | USPT | USOC).dbnm.	(US-PGPUB; USPAT; USOCR)	OR	ON	ON	2024/07/29 01:34 PM
L19	2020	(A42B3/042).cpc.	(US-PGPUB; USPAT; USOCR; FPRS; EPO; JPO)	OR	ON	ON	2024/07/29 01:47 PM
L20	12	((US-11937660-B2 OR US-11452327-B2 OR US-9047790-B1 OR US-8191292-B2 OR US-9918506-B2 OR US-11266199-B2 OR US-8193940-B2 OR US-9507245-B1).did. AND USPT.dbnm.) OR ((US-20110113529-A1 OR US-20170303619-A1 OR US-20240081459-A1 OR US-20150286117-A1).did. AND PGPB.dbnm.)	(US-PGPUB; USPAT; USOCR; FIT (CA, JP); FPRS; EPO; JPO; DERWENT; IBM_TDB)	OR	ON	ON	2024/07/29 02:23 PM
L21	63	("5938492" | "7011460" | "8870475" | "9268201" | "9377672" | "20100299814" | "20120099849" | "20120315813" | "20130184033" |	(US-PGPUB; USPAT; USOCR)	OR	ON	ON	2024/07/29 02:42 PM

		"20140105589" | "20140321843" | "20150177597" | "20150286117" | "20160131964" | "20160209733").pn. OR ("9507245").urpn. AND (PGPB | USPT | USOC).dbnm.					
L22	17	("2015/0286117").urpn. AND (PGPB | USPT | USOC).dbnm.	(US-PGPUB; USPAT; USOCR)	OR	ON	ON	2024/07/29 02:47 PM
L23	16	((US-11937660-B2 OR US-11452327-B2 OR US-9047790-B1 OR US-8191292-B2 OR US-9918506-B2 OR US-11266199-B2 OR US-8193940-B2 OR US-9507245-B1 OR US-9377672-B1 OR US-11231056-B2 OR US-10021931-B2).did. AND USPT.dbnm.) OR ((US-20110113529-A1 OR US-20170303619-A1 OR US-20240081459-A1 OR US-20150286117-A1 OR US-20140321843-A1).did. AND PGPB.dbnm.)	(US-PGPUB; USPAT; USOCR; FIT (CA, JP); FPRS; EPO; JPO; DERWENT; IBM_TDB)	OR	ON	ON	2024/07/29 02:49 PM
L24	16	((US-11937660-B2 OR US-11452327-B2 OR US-9047790-B1 OR US-8191292-B2 OR US-9918506-B2 OR US-11266199-B2 OR US-8193940-B2 OR US-9507245-B1 OR US-9377672-B1 OR US-11231056-B2 OR US-10021931-B2).did. AND USPT.dbnm.) OR ((US-20110113529-A1 OR US-20170303619-A1 OR US-20240081459-A1 OR US-20150286117-A1 OR US-20140321843-A1).did. AND PGPB.dbnm.)	(US-PGPUB; USPAT; USOCR; FIT (CA, JP); FPRS; EPO; JPO; DERWENT; IBM_TDB)	OR	ON	ON	2024/07/29 02:49 PM
L25	13	("4317263" | "8572820" | "8899411" | "9423671" | "9611881" | "9700145" | "10238184" |	(US-PGPUB; USPAT; USOCR)	OR	ON	ON	2024/07/29 02:50 PM

		"10782596" | "20050232413" | "20120050968" | "20140360893" | "20150286117" | "20190154190").pn. OR ("11231056").urpn. AND (PGPB | USPT | USOC).dbnm.					
L26	31	("4270679" | "4670912" | "4697783" | "D301395" | "4953766" | "5014892" | "5806734" | "6028627" | "6416239" | "7234173" | "7570301" | "7576800" | "7621681" | "8079501" | "8199251" | "8342758" | "D684569" | "8531592" | "D700746" | "20080237422" | "20090059063" | "20110239354" | "20140033406" | "20150026872" | "20150223540" | "20150282548" | "20150286117" | "20150338659" | "20160212869").pn. OR ("10021931").urpn. AND (PGPB | USPT | USOC).dbnm.	(US-PGPUB; USPAT; USOCR)	OR	ON	ON	2024/07/29 02:50 PM
L27	16	("2014/0321843").urpn. AND (PGPB | USPT | USOC).dbnm.	(US-PGPUB; USPAT; USOCR)	OR	ON	ON	2024/07/29 02:52 PM
L28	16	((US-11937660-B2 OR US-11452327-B2 OR US-9047790-B1 OR US-8191292-B2 OR US-9918506-B2 OR US-11266199-B2 OR US-8193940-B2 OR US-9507245-B1 OR US-9377672-B1 OR US-11231056-B2 OR US-10021931-B2).did. AND USPT.dbnm.) OR ((US-20110113529-A1 OR US-20170303619-A1 OR US-20240081459-A1 OR US-20150286117-A1 OR US-20140321843-A1).did. AND PGPB.dbnm.)	(US-PGPUB; USPAT; USOCR; FIT (CA, JP); FPRS; EPO; JPO; DERWENT; IBM_TDB)	OR	ON	ON	2024/07/29 02:53 PM
L29	14	L28 AND helmet	(US-PGPUB; USPAT;	OR	ON	ON	2024/07/29

			USOCR; FPRS; EPO; JPO)				02:54 PM
L30	30	(Artificial Intelligence) Similar to: 17/856,628 with 0 CPC Selections and 0 Text Selections Text: (US-20220346484-A1 OR US-20190231016-A1 OR CA-3031264-A1 OR US-11452327-B2 OR US-20220132973-A1 OR CN-102389177-A OR EP-3544459-B1 OR DE-102016115905-B4 OR US-6157298-A OR WO-2012125033-A1 OR DE-202016008524-U1 OR CN-114009890-A OR DE-102014115344-A1 OR US-6244721-B1 OR US-11266199-B2 OR WO-2018096172-A1 OR US-5588736-A OR CA-2175550-A1 OR CA-3077756-A1 OR US-20100043126-A1 OR EP-2554067-A1 OR CN-114009890-B OR WO-2011084660-A1 OR US-20210052029-A2 OR US-20130031699-A1 OR US-20200015537-A1 OR US-6007213-A OR TW-I712371-B OR AU-2012203924-B2 OR US-20230329386-A1 OR US-20090307826-A1 OR CA-2786243-A1 OR DE-3821513-C1 OR JP-6061539-B2 OR US-D277237-S OR EP-2554067-B1 OR US-7908667-B2 OR WO-2024091942-A1 OR JP-2013036158-A OR WO-2020019037-A1 OR US-20200170329-A1 OR US-10912344-B2 OR US-4209858-A OR WO-2008036324-A2 OR US-6317895-B1 OR US-20060282939-A1 OR GB-2588687-A OR	(US-PGPUB; USPAT; USOCR; FIT (CA, JP))	OR	ON	ON	2024/07/29 03:46 PM

		DE-102011051638-A1 OR CA-2299593-C OR US-20090158507-A1).did.					
L31	35	(Artificial Intelligence) Similar to: 17/856,628 with 0 CPC Selections and 1 Text Selection Text: (US-20100071107-A1 OR US-11452327-B2 OR CA-3031264-A1 OR US-20220346484-A1 OR US-20190231016-A1 OR US-20210298386-A1 OR AU-2021269050-A1 OR WO-2021226459-A1 OR US-20150047112-A1 OR CA-3173765-A1 OR US-20210345721-A1 OR US-20090268153-A1 OR US-20090314449-A1 OR WO-2010068819-A1 OR WO-2024054574-A1 OR US-6760927-B2 OR US-20240081459-A1 OR US-8522418-B2 OR CN-115443082-A OR CN-219762564-U OR US-20220039500-A1 OR US-20110314580-A1 OR US-6389607-B1 OR US-10534184-B2 OR US-6497493-B1 OR US-20130125296-A1 OR US-20140338104-A1 OR JP-2023098968-A OR JP-2006169669-A OR WO-2004019110-A1 OR US-10617167-B2 OR US-20060031975-A1 OR WO-2019143421-A1 OR KR-20200105945-A OR AU-2006220433-B2 OR AU-2006220433-A1 OR US-20210018757-A1 OR US-10838216-B2 OR WO-2023187709-A1 OR US-20220007760-A1 OR US-11307424-B2 OR GB-2470096-A OR	(US-PGPUB; USPAT; USOCR; FIT (CA, JP))	OR	ON	ON	2024/07/29 03:46 PM

		NL-2028165-B1 OR US-20210392989-A1 OR US-20040125047-A1 OR US-8464362-B2 OR US-20180153246-A1 OR US-20100146684-A1 OR JP-2021510982-A OR DE-102022117645-B4).did.					
L32	16	((US-11937660-B2 OR US-11452327-B2 OR US-9047790-B1 OR US-8191292-B2 OR US-9918506-B2 OR US-11266199-B2 OR US-8193940-B2 OR US-9507245-B1 OR US-9377672-B1 OR US-11231056-B2 OR US-10021931-B2).did. AND USPT.dbnm.) OR ((US-20110113529-A1 OR US-20170303619-A1 OR US-20240081459-A1 OR US-20150286117-A1 OR US-20140321843-A1).did. AND PGPB.dbnm.)	(US-PGPUB; USPAT; USOCR; FIT (CA, JP); FPRS; EPO; JPO; DERWENT; IBM_TDB)	OR	ON	ON	2024/07/29 03:49 PM
L33	34	(Artificial Intelligence) More like doc: US-11266199-B2 Text: (US-20200329806-A1 OR CA-3077756-A1 OR US-20220132973-A1 OR US-11717047-B2 OR US-20230329386-A1 OR US-20220117347-A1 OR US-11241060-B2 OR US-20200329805-A1 OR US-20240016252-A1 OR US-11452327-B2 OR US-20190231016-A1 OR CA-3031264-A1 OR US-20220346484-A1 OR US-20080130271-A1 OR EP-2479489-A2 OR US-8545069-B2 OR EP-2479489-B1 OR US-20120182748-A1 OR CA-2141336-A1 OR CN-117320585-A).did.	(US-PGPUB; USPAT; USOCR; FIT (AU, AP, AT, BE, BG, BR, BY, CA, CH, CN, CS, CU, CZ, DD, DE, DK, EA, EE, EP, ES, FI, FR, GB, HR, HU, ID, IE, IL, IS, IT, JP, KR, LT, LU, LV, MA, OA, RU, SU, WO, MC, MD, MY, NL, NO, NZ, PH, PL, PT, RO, RS, SE, SG, SI, SK, TH, TN, TR, TW, UA, VN); FPRS; EPO; JPO; DERWENT; IBM_TDB)	OR	ON	ON	2024/07/29 03:50 PM
L34	115	("1530402" | "2203028"	(US-PGPUB; USPAT;	OR	ON	ON	2024/07/29

		| "2461201" | "2900696" | "3134548" | "3273163" | "3302018" | "3577561" | "4156942" | "4196966" | "4298913" | "4324158" | "4360930").pn. OR ("4521831").urpn. AND (PGPB | USPT | USOC).dbnm.	USOCR)				04:25 PM

PE2E SEARCH - Search History (Interference)

There are no Interference searches to show.

Substitute for Form 1449A/B/PTO **INFORMATION DISCLOSURE STATEMENT BY APPLICANT**				Patent Application No.	17/856,628
				Confirmation No.	4418
Sheet	1	of	2	Attorney Docket No.	763379

U.S. PATENT DOCUMENTS						
Examiner Initials	Doc. No.	U.S. Patent Document		Name of Patentee or Applicant	Date of Publication	Filing Date If Appropriate
		Application or Patent Number	Kind Code			
	AA	1,947,786	A	Lueck et al..	02-20-1934	
	AB	4,521,831	A	Thayer	06-04-1985	
	AC	5,026,016	A	Lisowski	06-25-1991	
	AD	5,688,039	A	Johnson	11-18-1997	
	AE	6,497,493	B1	Theisen	12-24-2002	
	AF	6,532,601	B1	Berman	03-18-2003	
	AG	6,616,294	B1	Henry	09-09-2003	
	AH	6,701,649	B1	Brosi	03-09-2004	
	AI	6,811,348	B1	Meyer et al.	11-02-2004	
	AJ	8,060,951	B2	Smith	11-22-2011	
	AK	9,702,534	B1	Brion	07-11-2017	
	AL	9,814,622	B2	Somners	11-14-2017	
	AM	9,872,531	B2	Uke et al.	01-23-2018	
	AN	10,743,599	B2	Silva et al.	08-18-2020	
	AO	10,886,646	B2	Goupil et al.	01-05-2021	
	AP	11,019,870	B2	Hyma	06-01-2021	
	AQ	2002/0116749	A1	Bielefeld et al.	08-26-2003	
	AR	2008/0263752	A1	Solinsky et al.	10-30-2008	
	AS	2010/0083413	A1	Mcgovern	04-08-2010	
	AT	2011/0072562	A1	Prendergast	03-31-2011	
	AU	2012/0224356	A1	Fischer et al.	09-06-2012	
	AV	2012/0317706	A1	Lebel et al.	04-25-2017	
	AW	2012/0320569	A1	Lu	12-20-2012	
	AX	2013/0086722	A1	Teetzel et al.	12-09-2014	
	AY	2014/0000013	A1	Redpath et al.	01-02-2014	
	AZ	2014/0000014	A1	Redpath et al.	01-02-2014	
	BA	2014/0020159	A1	Teetzel et al.	01-23-2014	
	BB	2016/0242483	A1	Dorsey et al.	08-25-2016	
	BC	2016/0249700	A1	Zhavoronkov	09-01-2016	
	BD	2017/0238642	A1	Tatum	08-24-2017	
	BE	2018/0128459	A1	Carroll	05-10-2018	
	BF	2018/0192727	A1	Chen	07-12-2018	
	BG	2018/0249779	A1	DeLima et al.	09-06-2018	
	BH	2019/0008228	A1	Ramey	01-10-2019	
	BI	2019/0098952	A1	Teetzel et al.	04-04-2019	
	BJ	2019/0101359	A1	Zimmer	04-04-2019	
	BK	2019/0104797	A1	Teetzel et al.	04-11-2019	
	BL	2019/0107247	A1	Teetzel et al.	04-11-2019	
	BM	2019/0350291	A1	Maldonado et al.	11-21-2019	
	BN	2019/0350292	A1	Maldonado et al.	05-12-2020	
	BO	2020/0170329	A1	Bohn et al.	02-09-2021	
	BP	2020/0268088	A1	Sanchez	06-14-2022	
	BQ	2020/0329806	A1	Wong	10-22-2020	

Examiner Signature	/ALISSA L HOEY/	Date Considered	07/29/2024

* If the reference is not in English, then at least one of the following is provided: (a) an English translation in whole or in part or (b) a concise statement of relevance in the form of, for example, an English language counterpart, an English-language abstract, or an English-language version of the search report or action by a foreign patent office in a counterpart foreign application indicating the degree of relevance found by the foreign office.

ALL REFERENCES CONSIDERED EXCEPT WHERE LINED THROUGH. /A.L.H/

Substitute for Form 1449A/B/PTO **INFORMATION DISCLOSURE STATEMENT BY APPLICANT**				Patent Application No.	17/856,628
				Confirmation No.	4418
Sheet	2	of	2	Attorney Docket No.	763379

FOREIGN PATENT DOCUMENTS							
Examiner Initials	Doc. No.	Foreign Patent Document			Name of Patentee or Applicant	Date of Publication	Translation *
		Office	Application or Patent Number	Kind Code			
	BR	CA	2759794	A1	Norotos, Inc.	11-11-2010	
	BS	DE	102016115897	A1	Schuberth GmbH	03-01-2018	

Examiner Signature	/ALISSA L HOEY/	Date Considered	07/29/2024

* If the reference is not in English, then at least one of the following is provided: (a) an English translation in whole or in part or (b) a concise statement of relevance in the form of, for example, an English language counterpart, an English-language abstract, or an English-language version of the search report or action by a foreign patent office in a counterpart foreign application indicating the degree of relevance found by the foreign office.

ALL REFERENCES CONSIDERED EXCEPT WHERE LINED THROUGH. /A.L.H/

IN THE UNITED STATES PATENT AND TRADEMARK OFFICE

Patent Application No. 17/856,628

Confirmation No. 4418

Attorney Docket No. 763379

INFORMATION DISCLOSURE STATEMENT

Pursuant to 37 CFR 1.97 and 1.98, the documents listed on the accompanying Form PTO-1449, Substitute Form PTO-1449, and/or USPTO Form SB/08 (hereinafter, individually or collectively referred to as "Form") are submitted for consideration by the Examiner in the examination of the above-identified patent application.

The full consideration of the documents in their entirety by the Examiner is respectfully requested and encouraged. Also, it is respectfully requested that the documents be entered into the record of the present application and that the Examiner initial the appropriate area on the accompanying Form, thereby indicating the Examiner's consideration of each of the documents.

The submission of the documents listed on the Form is for the purpose of providing a complete record and is not a concession that the documents listed thereon are prior art to the invention claimed in the patent application. The right is expressly reserved to establish an invention date earlier than the above-identified filing date in order to remove any document submitted herewith as prior art should it be deemed appropriate to do so.

Further, the submission of the documents is not to be taken as a concession that any reference represents art that is relevant or analogous to the claimed invention. Accordingly, the right to argue that any document is not properly within the scope of prior art relevant to an examination of the claims in the above-identified application is also expressly reserved.

The Information Disclosure Statement is being filed:

☒ **within** any one of the following time periods: (a) within three months of the filing date of a national application other than a continued prosecution application under 37 CFR 1.53(d); (b) within three months of the date of entry of the national stage as set forth in 37 CFR 1.491 of an international application; (c) before the mailing date of a first Office Action on the merits; or (d) before the mailing of a first Office Action after the filing of a request for continued examination under 37 CFR 1.114.

☐ Note: This submission includes the Statement under 37 CFR 1.704(d) (see "Statement under 37 CFR 1.704(d)" below), such that no reduction in patent term adjustment is warranted by the filing of this Information Disclosure Statement.

☐ **after** (a), (b), (c) or (d) above, but before the mailing date of a final action under 37 CFR 1.113, a Notice of Allowance under 37 CFR 1.311, or an action that otherwise closes prosecution in the application, and includes *one* of:

/ALISSA L HOEY/ 07/29/2024

Milwaukee Electric Tool Corporation
Ex-1020
Page 124 of 189

ALL REFERENCES CONSIDERED EXCEPT WHERE LINED THROUGH. /A.L.H/

☐ the Statement under 37 CFR 1.97(e) (see "Statement under 37 CFR 1.97(e)" below).

☐ Note: This submission includes the Statement under 37 CFR 1.704(d) (see "Statement under 37 CFR 1.704(d)" below), such that no reduction in patent term adjustment is warranted by the filing of this Information Disclosure Statement.

– *or* –

☐ the fee set forth in 37 CFR 1.17(p) (see "Fees" below).

☐ **on or after** the mailing date of a final action under 37 CFR 1.113 or a Notice of Allowance under 37 CFR 1.311, or an action that otherwise closes prosecution in the application, and on or before payment of the issue fee, and includes the Statement under 37 CFR 1.97(e) (see "Statement under 37 CFR 1.97(e)" below), and the fee set forth in 37 CFR 1.17(p) (see "Fees" below).

☐ Note: This submission includes the Statement under 37 CFR 1.704(d) (see "Statement under 37 CFR 1.704(d)" below), such that no reduction in patent term adjustment is warranted by the filing of this Information Disclosure Statement.

Statement under 37 CFR 1.97(e)

☐ The **undersigned** hereby states that each item of information contained in the Information Disclosure Statement was first cited in any communication from a foreign patent office in a counterpart foreign patent application not more than three months prior to the filing of the Information Disclosure Statement.

☐ The **undersigned** hereby states that no item of information contained in the Information Disclosure Statement was cited in a communication from a foreign patent office in a counterpart foreign patent application, and, to the knowledge of the undersigned after making reasonable inquiry, no item of information contained in the Information Disclosure Statement was known to any individual designated in 37 CFR 1.56(c) more than three months prior to the filing of the Information Disclosure Statement.

Statement under 37 CFR 1.704(d)

☐ The **undersigned** hereby states that each item of information contained in the Information Disclosure Statement was first cited in any communication from a patent office in a counterpart foreign or international application or from the Office and that this communication was not received by any individual designated in 37 CFR 1.56(c) more than thirty days prior to the filing of the Information Disclosure Statement.

/ALISSA L HOEY/

07/29/2024

Milwaukee Electric Tool Corporation
Ex-1020
Page 125 of 189

ALL REFERENCES CONSIDERED EXCEPT WHERE LINED THROUGH. /A.L.H/

Citation to Other Patent Applications

☒ The following U.S. patent applications are hereby brought to the attention of the Examiner. The U.S. patent applications claim subject matter that may be considered by the Examiner to be similar to the subject matter claimed in the above-identified patent application. Accordingly, these U.S. patent applications and/or the prosecution pertaining thereto may include information considered to be material to the prosecution of the above-identified patent application. Since the Examiner has electronic access to the prosecution histories of these U.S. patent applications, copies of prosecution materials therefrom are not provided herewith, but will be promptly provided if the Examiner so desires and requests same.

U.S. APPLICATIONS		STATUS *(check one)*		
U.S. APPLICATIONS	U.S. FILING DATE	Patented	Pending	Never Issued: Abandoned/Expired
1. 16/246,935	Jan. 14, 2019	X		
2.				
3.				

Copies of the Documents

☐ Copies of any U.S. patents and published patent applications that are listed on the accompanying Form are not enclosed herewith. Copies of any other documents identified on the accompanying Form are enclosed herewith.

☐ For each document not in the English language, at least one of the following is provided: (a) an English translation in whole or in part or (b) a concise statement of relevance in the form of, for example, an English language counterpart, an English-language abstract, or an English-language version of the search report or action by a foreign patent office in a counterpart foreign application indicating the degree of relevance found by the foreign office.

☒ The documents listed on the accompanying Form were previously identified in the parent application(s) of the present application, and copies of the documents were furnished at that time. Accordingly, additional copies of the documents are not submitted herewith, so as not to burden the file with duplicate copies of documents. The Examiner is respectfully requested to carefully review the documents in accordance with the requirements set out in the Manual of Patent Examining Procedure. In accordance with 37 CFR 1.98(d), the details of the parent application(s) relied upon for an earlier filing date under 35 USC 120 in which copies of the documents were previously furnished are set out below:

U.S. APPLICATIONS		STATUS *(check one)*		
U.S. APPLICATIONS	U.S. FILING OR 371(c) DATE	Patented	Pending	Abandoned
1. 16/246,938	Jan. 14, 2019	X		
2.				
3.				

/ALISSA L HOEY/

07/29/2024

Milwaukee Electric Tool Corporation
Ex-1020
Page 126 of 189

ALL REFERENCES CONSIDERED EXCEPT WHERE LINED THROUGH. /A.L.H/

Fee Calculation

☒ **No fee** is owed by the applicant(s).

☐ IDS Fee (37 CFR 1.17(p)) $260.00

☐ Applicant(s) assert(s) small entity status. Therefore, the fee shown above is reduced by 50%, and the resulting fee is shown below.

☐ Applicant(s) certifies/certify micro entity status. Therefore, the fee shown above is reduced by 75%, and the resulting fee is shown below. Note: Form PTO/SB15A or B must either be enclosed or have been submitted previously

☒ **Total Fee Due** **$0.00**

Fee Payment

☐ Charge the indicated **Total Fee Due** to Deposit Account No. 12-1216.

☒ Charge any additional fees owed in connection with this communication to Deposit Account No. 12-1216.

☒ Credit any refund to Account No. 12-1216.

Leydig

/Elias P. Soupos/
Elias P. Soupos, Reg. No. 57,375
Telephone: 312-616-5600
Facsimile: 312-616-5700

Date: October 25, 2022

/ALISSA L HOEY/

07/29/2024

Milwaukee Electric Tool Corporation
Ex-1020
Page 127 of 189

ALL REFERENCES CONSIDERED EXCEPT WHERE LINED THROUGH. /A.L.H/

UNITED STATES PATENT AND TRADEMARK OFFICE

UNITED STATES DEPARTMENT OF COMMERCE
United States Patent and Trademark Office
Address: COMMISSIONER FOR PATENTS
P.O. Box 1450
Alexandria, Virginia 22313-1450
www.uspto.gov

APPLICATION NO.	FILING DATE	FIRST NAMED INVENTOR	ATTORNEY DOCKET NO.	CONFIRMATION NO.
17/856,628	07/01/2022	Shantanu Deshpande	763379	4418

23460 7590 08/02/2024
LEYDIG VOIT & MAYER, LTD
TWO PRUDENTIAL PLAZA, SUITE 4900
180 NORTH STETSON AVENUE
CHICAGO, IL 60601-6731

EXAMINER
HOEY, ALISSA L

ART UNIT	PAPER NUMBER
3732	

NOTIFICATION DATE	DELIVERY MODE
08/02/2024	ELECTRONIC

Please find below and/or attached an Office communication concerning this application or proceeding.

The time period for reply, if any, is set in the attached communication.

Notice of the Office communication was sent electronically on above-indicated "Notification Date" to the following e-mail address(es):

Chgpatent@leydig.com

Office Action Summary	Application No. 17/856,628	Applicant(s) Deshpande et al.	
	Examiner ALISSA L HOEY	Art Unit 3732	AIA (FITF) Status Yes

-- The MAILING DATE of this communication appears on the cover sheet with the correspondence address --

Period for Reply

A SHORTENED STATUTORY PERIOD FOR REPLY IS SET TO EXPIRE 3 MONTHS FROM THE MAILING DATE OF THIS COMMUNICATION.

- Extensions of time may be available under the provisions of 37 CFR 1.136(a). In no event, however, may a reply be timely filed after SIX (6) MONTHS from the mailing date of this communication.
- If NO period for reply is specified above, the maximum statutory period will apply and will expire SIX (6) MONTHS from the mailing date of this communication.
- Failure to reply within the set or extended period for reply will, by statute, cause the application to become ABANDONED (35 U.S.C. § 133). Any reply received by the Office later than three months after the mailing date of this communication, even if timely filed, may reduce any earned patent term adjustment. See 37 CFR 1.704(b).

Status

1)☑ Responsive to communication(s) filed on 07/15/24.

☐ A declaration(s)/affidavit(s) under **37 CFR 1.130(b)** was/were filed on _____.

2a)☐ This action is **FINAL.** 2b) ☑ This action is non-final.

3)☐ An election was made by the applicant in response to a restriction requirement set forth during the interview on _____; the restriction requirement and election have been incorporated into this action.

4)☐ Since this application is in condition for allowance except for formal matters, prosecution as to the merits is closed in accordance with the practice under *Ex parte Quayle*, 1935 C.D. 11, 453 O.G. 213.

Disposition of Claims*

5) ☑ Claim(s) 21-39 is/are pending in the application.

5a) Of the above claim(s) 36-39 is/are withdrawn from consideration.

6) ☐ Claim(s) _____ is/are allowed.

7) ☑ Claim(s) 21-35 is/are rejected.

8) ☐ Claim(s) _____ is/are objected to.

9) ☐ Claim(s) _____ are subject to restriction and/or election requirement

* If any claims have been determined allowable, you may be eligible to benefit from the **Patent Prosecution Highway** program at a participating intellectual property office for the corresponding application. For more information, please see http://www.uspto.gov/patents/init_events/pph/index.jsp or send an inquiry to **PPHfeedback@uspto.gov.**

Application Papers

10)☐ The specification is objected to by the Examiner.

11)☐ The drawing(s) filed on _____ is/are: a)☐ accepted or b)☐ objected to by the Examiner.

Applicant may not request that any objection to the drawing(s) be held in abeyance. See 37 CFR 1.85(a).

Replacement drawing sheet(s) including the correction is required if the drawing(s) is objected to. See 37 CFR 1.121(d).

Priority under 35 U.S.C. § 119

12)☐ Acknowledgment is made of a claim for foreign priority under 35 U.S.C. § 119(a)-(d) or (f).

Certified copies:

a)☐ All b)☐ Some** c)☐ None of the:

1.☐ Certified copies of the priority documents have been received.

2.☐ Certified copies of the priority documents have been received in Application No. _____.

3.☐ Copies of the certified copies of the priority documents have been received in this National Stage application from the International Bureau (PCT Rule 17.2(a)).

** See the attached detailed Office action for a list of the certified copies not received.

Attachment(s)

1) ☑ Notice of References Cited (PTO-892)

2) ☑ Information Disclosure Statement(s) (PTO/SB/08a and/or PTO/SB/08b) Paper No(s)/Mail Date _____.

3) ☐ Interview Summary (PTO-413) Paper No(s)/Mail Date _____.

4) ☐ Other: _____.

DETAILED ACTION

Notice of Pre-AIA or AIA Status

The present application, filed on or after March 16, 2013, is being examined under the first inventor to file provisions of the AIA.

Election/Restrictions

Applicant's election without traverse of invention I and the species directed to no side light in the reply filed on 07/15/24 is acknowledged.

Claim Rejections - 35 USC § 102

In the event the determination of the status of the application as subject to AIA 35 U.S.C. 102 and 103 (or as subject to pre-AIA 35 U.S.C. 102 and 103) is incorrect, any correction of the statutory basis (i.e., changing from AIA to pre-AIA) for the rejection will not be considered a new ground of rejection if the prior art relied upon, and the rationale supporting the rejection, would be the same under either status.

The following is a quotation of the appropriate paragraphs of 35 U.S.C. 102 that form the basis for the rejections under this section made in this Office action:

> A person shall be entitled to a patent unless –
>
> (a)(1) the claimed invention was patented, described in a printed publication, or in public use, on sale, or otherwise available to the public before the effective filing date of the claimed invention.

Claim(s) 29 and 31 is/are rejected under 35 U.S.C. 102(a)(1) as being anticipated by Duderstadt (US 9,047,790).

In regard to claim 29, Duderstadt teaches a safety helmet system, comprising: a safety helmet comprising: an outer shell adapted to be worn by a user (helmet in figures 8-10 and 12-

15), an exterior of the outer shell having a front side, a rear side, and a brim extending outwardly from the front side (see figures 8-10 and 12-15); at least one receptacle having two external slots and a stop on the exterior of the outer shell (figures 1A-7 slots: 11, 13 or figures 16-18 slots: 39, 41) each of the external slots extending upwardly on at least one of the front side or the rear side along the exterior of the outer shell on either side of the stop (see figures 1-3, 6 or 17), wherein the outer shell forms the stop from a same material as the outer shell (beveled edge 15 or inner curved surface: 35 or 37; column 3, lines 21-24); and an accessory device having a mating receptacle formed thereon (rigid cardstock item: 25, column 7, lines 9-18), at least a portion of the mating receptacle being selectively engageable with the at least one receptacle such that the accessory device is releasably mountable onto the exterior of the outer shell (column 7, lines 9-18).

In regard to claim 32, Duderstadt teaches wherein the same material is plastic (column 3, lines 21-24).

Claim Rejections - 35 USC § 103

In the event the determination of the status of the application as subject to AIA 35 U.S.C. 102 and 103 (or as subject to pre-AIA 35 U.S.C. 102 and 103) is incorrect, any correction of the statutory basis (i.e., changing from AIA to pre-AIA) for the rejection will not be considered a new ground of rejection if the prior art relied upon, and the rationale supporting the rejection, would be the same under either status.

The following is a quotation of 35 U.S.C. 103 which forms the basis for all obviousness rejections set forth in this Office action:

> A patent for a claimed invention may not be obtained, notwithstanding that the claimed invention is not identically disclosed as set forth in section 102, if the differences between the claimed invention and the prior art are such that the claimed invention as a whole would have been obvious before the effective filing date of the claimed invention to a person having ordinary skill in the art to which the claimed invention pertains. Patentability shall not be negated by the manner in which the invention was made.

Claim(s) 31 and 33 is/are rejected under 35 U.S.C. 103 as being unpatentable over Duderstadt (US 9,047,790) in view of Ramey (US 2019/0008228).

Duderstadt teaches a safety helmet with a front receptacle as described above in claim 29. However, Duderstadt fails to teach a rear receptacle having an identical construction to the front receptacle.

In regard to claim 31, Ramey teaches a safety helmet with identical receptacles on the front and rear side of the outer shell to universally attach to accessories for mounting on the helmet (paragraphs 0012, 0080 and Figures 2A, 2B).

It would have been obvious before the effective filing date to one having ordinary skill in the art to have provided the safety helmet of Duderstadt with a rear receptacle as taught by Ramey, since the helmet of Duderstadt provided with both front and rear receptacles would provide multiple locations to attach items to the helmet as desired based upon need.

In regard to claim 33, Ramey teaches further including a second accessory device having a second mating receptacle formed thereon, at least a portion of the second accessory device being releasably mountable onto either of the front receptacle and the rear receptacle on the exterior of the outer shell (paragraph 0012 and 0080).

It would have been obvious before the effective filing date to one having ordinary skill in the art to have provided the safety helmet of Duderstadt with a secondary accessory device as taught by Ramey, since the helmet of Duderstadt provided with a secondary accessory device would provide two accessories attachable to the helmet at the same time.

Claim(s) 21, 22 and 24-28 is/are rejected under 35 U.S.C. 103 as being unpatentable over Duderstadt (US 9,047,790) in view of Ramey (US 2019/0008228).

In regard to claim 21, Duderstadt teaches a safety helmet system, comprising: a safety helmet comprising: a molded outer shell adapted to be worn by a user (helmet in figures 8-10

and 12-15), the outer shell having an exterior surface defining a front side, a rear side, and a brim extending forwardly from the front side (see figures 8-10 and 12-15); a front receptacle having a first pair of external slots and a stop (figures 1A-7 slots: 11, 13 or figures 16-18 slots: 39, 41), wherein each of the pair of external slots extending upwardly along the front side of the outer shell and the stop is disposed between the first pair of external slots (see figures 1-3, 6 or 17), and wherein the stop is integrally molded with the exterior surface of the outer shell (beveled edge 15 or inner curved surface: 35 or 37; column 3, lines 21-24); and an accessory device having a mating receptacle formed thereon (rigid cardstock item: 25, column 7, lines 9-18), at least a portion of the mating receptacle being selectively engageable with the at least one receptacle (column 7, lines 9-18).

However, Duderstadt fails to teach a rear receptacle disposed on the rear side on the exterior surface of the outer shell, the rear receptacle having a second pair of external slots; and the accessory device having a mating receptacle formed thereon, at least a portion of the mating receptacle being selectively engageable with the front receptacle or the rear receptacle such that the accessory device is releasably mountable onto each of the front receptacle and the rear receptacle.

Ramey teaches a safety helmet with identical receptacles on the front and rear side of the outer shell to universally attach accessories for mounting on the helmet on the front or rear receptacles (paragraphs 0012, 0080 and Figures 2A, 2B).

It would have been obvious before the effective filing date to one having ordinary skill in the art to have provided the safety helmet of Duderstadt with an identical rear receptacle as taught by Ramey, since the helmet of Duderstadt provided with both front and rear receptacles would provide a multiple locations to attach items to the helmet as desired based upon need.

In regard to claim 22, Duderstadt teaches wherein the stop includes a protruding member (beveled edge at intersection of 15 and 3 or curved surfaces forming slots: 35, 37), and wherein the protruding member is integrally molded from a plastic material with the outer shell (column 3, lines 22-25).

In regard to claim 24, Duderstadt teaches wherein the outer shell, the front receptacle, and the rear receptacle are formed from a common material (column 3, lines 22-25).

In regard to claim 25, Duderstadt teaches wherein the common material is plastic (column 3, lines 22-25).

In regard to claim 26, Ramey teaches further including a second accessory device having a second mating receptacle formed thereon, at least a portion of the second accessory device being releasably mountable onto each of the front receptacle or the rear receptacle on the exterior of the outer shell (paragraph 0012 and 0080).

It would have been obvious before the effective filing date to one having ordinary skill in the art to have provided the safety helmet of Duderstadt with a secondary accessory device as taught by Ramey, since the helmet of Duderstadt provided with a secondary accessory device would provide two accessories attachable to the helmet at the same time.

In regard to claim 27, Duderstadt teaches wherein: each of the first pair of external slots includes a first sidewall (see figure 1A, 6 or 17), which define a pair of first sidewalls (see figures 1A, 6 and 17 outer slots and the side walls extend perpendicular to the helmet); the accessory device includes a bracket (rigid cardstock item/blank piece of rigid material: 25, column 7, lines 9-18); and the bracket is retained by the pair of first sidewalls to mount the accessory device to the front receptacle (column 7, lines 14-18).

28. (Previously Presented) The safety helmet of claim 27, wherein: each of the first pair of external slots includes a second sidewall (see figure 1A, 6 or 17), which define a pair of second sidewalls (outer slot walls that are parallel to the helmet as seen in figures 3, 6, and 17); and the bracket is retained by the pair of first sidewalls and the pair of second sidewalls (column 7, lines 14-18).

Claim(s) 29, 30, 32, 34 and 35 is/are rejected under 35 U.S.C. 103 as being unpatentable over Silva et al. (US 2017/0303619) in view of Druker et al. (US 9,507,245) and Duderstadt (US 9,047,790).

In regard to claim 29, Silva et al. teaches a safety helmet system, comprising: a safety helmet (safety helmet: 14) comprising: an outer shell adapted to be worn by a user, an exterior of the outer shell having a front side, a rear side, and a brim extending outwardly from the front side (safety helmet: 14 I figures 4-7); at least one receptacle on the exterior of the outer shell (attachment structure: 26); and an accessory device having a mating receptacle formed thereon (lighting element: 12 and mating receptacle/support: 10), at least a portion of the mating receptacle being selectively engageable with the at least one receptacle such that the accessory device is releasably mountable onto the exterior of the outer shell (see figures 4-7 and paragraph 0051). Further, Silva teaches the helmet being a plastic helmet (paragraph 10), the support (10) being made from a molded plastic material (paragraph 0051), the attachment structure (26) being molded to the safety helmet (paragraph 0053), the mating interaction projections of the support and the attachment structure can be reversed (paragraph 0053), and the mating slot of the support and the mating attachment structure attachment can be shaped or configured in any way so as to facilitate removable attachment of the support to the helmet (paragraph 0054).

However, Silva et al. fails to teach the safety helmet receptacle having two external slots and a stop on the exterior of the outer shell, each of the external slots extending upwardly on at least one of the front side or the rear side along the exterior of the outer shell on either side of the stop, wherein the outer shell forms the stop from a same material as the outer shell.

Druker et al. teaches a receptable for a helmet having two external slots and a stop on the exterior of the outer shell (column 7, lines 55-60, figure 1c slots/securing surfaces: 192a, 192b and figure 1c stop/spine: 198), each of the external slots extending upwardly on at least one of the front side or the rear side along the exterior of the outer shell on either side of the stop (see figures 1c), and an accessory device having a mating receptacle formed thereon (camera: 200, mating receptacle/lower mount component: 160), at least a portion of the mating receptacle being selectively engageable with the at least one receptacle such that the accessory device is releasably mountable onto the exterior of the outer shell (column 2, lines 18-22 and figures 1c, 2d).

It would have been obvious before the effective filing date to one having ordinary skill in the art to have provided the mating fastening means of Silva et al., to be slots and a stop on the helmet mating to a retainer of the accessory as taught by Druker et al., since the mating fastening means of Silva et al. being slots and a stop of the helmet would provide a means to attach an accessory thereto that minimizes the mating structure extending from the helmet providing a secure and easy means to attach and detach accessories thereto as desired. Here we are taking one well-known mating fastening means for attaching accessories to a helmet (Silva et al.) and replacing it with another well-known mating fastening means for attaching accessories to a helmet (Druker et al.).

Duderstadt teaches wherein a helmet outer shell is co-molded and formed of the same material as a mating receptacle (column 3, lines 21-24).

It would have been obvious before the effective filing date to one having ordinary skill in the art to have formed the fastening means of Silva et al. and Druker et al. as a co-molded plastic structure with the formation of the helmet as taught by Duderstadt, since the fastening means of Silva et al. and Druker et al. co-molded with the helmet structure would provide plastic mating fastening means that do not require any additional attachment and would be less prone to breakage.

In regard to claim 30, Druker al. teaches wherein each of the first pair of external slots of the at least one receptacle is a receiver slot flanked by raised walls and the stop comprises a protruding member (figure 1c stop/spine: 198; figure 1c, slot: 192a, 192b has raised side walls: 196a, 196b, 190a, 190b), wherein the accessory device includes a clip (clip/spine groove: column 5, lines 24-33), and wherein the receiver slot aligns the accessory device therein (see figures 1c and 1d), the raised walls retain the accessory device therebetween (figures 1c, 1d), and the stop engages the clip to releasably mount the accessory device in the at least one receptacle (figures 1c, 1d and column 5, lines 24-33).

It would have been obvious before the effective filing date to one having ordinary skill in the art to have provided the mating fastening means of Silva et al., to be slots and a stop on the helmet mating to a retainer of the accessory as taught by Druker et al., since the mating fastening means of Silva et al. being slots and a stop on the helmet would provide a means to attach an accessory thereto that minimizes the mating structure extending from the helmet providing a secure and easy means to attach and detach accessories thereto as desired. Here we are taking one well-known mating fastening means for attaching accessories to a helmet (Silva et al.) and replacing it with another well-known mating fastening means for attaching accessories to a helmet (Druker et al.).

In regard to claim 32, the combined references teach wherein the same material is plastic (Duderstadt: column 3, lines 21-24).

In regard to claim 34, Druker et al. teaches wherein: each of the two external slots of the at least one receptacle includes a first sidewall (first sidewall/side wall of sidewall: 190a/190b), which define a pair of first sidewalls (190a, 190b); the accessory device includes a bracket (180a, 180b); and the bracket is retained by the pair of first sidewalls to mount the accessory device to the at least one receptacle (see figures 1c and 1d).

It would have been obvious before the effective filing date to one having ordinary skill in the art to have provided the mating fastening means of Silva et al., to be slots and a stop on the helmet mating to a retainer of the accessory as taught by Druker et al., since the mating fastening means of Silva et al. being slots and a stop on the helmet would provide a means to attach an accessory thereto that minimizes the mating structure extending from the helmet providing a secure and easy means to attach and detach accessories thereto as desired. Here we are taking one well-known mating fastening means for attaching accessories to a helmet (Silva et al.) and replacing it with another well-known mating fastening means for attaching accessories to a helmet (Druker et al.).

In regard to claim 35, Druker et al. teaches wherein: each of the two external slots of the at least one receptacle includes a second sidewall (second sidewall is top wall of sidewall: 190a, 190b), which define a pair of second sidewalls (see figures 1c); and the bracket is retained by the pair of first sidewalls and the pair of second sidewalls (see figures 1c and 1d).

It would have been obvious before the effective filing date to one having ordinary skill in the art to have provided the mating fastening means of Silva et al., to be slots and a stop on the helmet mating to a retainer of the accessory as taught by Druker et al., since the mating

fastening means of Silva et al. being slots and a stop of the helmet would provide a means to attach an accessory thereto that minimizes the mating structure extending from the helmet providing a secure and easy means to attach and detach accessories thereto as desired. Here we are taking one well-known mating fastening means for attaching accessories to a helmet (Silva et al.) and replacing it with another well-known mating fastening means for attaching accessories to a helmet (Druker et al.).

Double Patenting

The nonstatutory double patenting rejection is based on a judicially created doctrine grounded in public policy (a policy reflected in the statute) so as to prevent the unjustified or improper timewise extension of the "right to exclude" granted by a patent and to prevent possible harassment by multiple assignees. A nonstatutory double patenting rejection is appropriate where the conflicting claims are not identical, but at least one examined application claim is not patentably distinct from the reference claim(s) because the examined application claim is either anticipated by, or would have been obvious over, the reference claim(s). See, e.g., *In re Berg*, 140 F.3d 1428, 46 USPQ2d 1226 (Fed. Cir. 1998); *In re Goodman*, 11 F.3d 1046, 29 USPQ2d 2010 (Fed. Cir. 1993); *In re Longi*, 759 F.2d 887, 225 USPQ 645 (Fed. Cir. 1985); *In re Van Ornum*, 686 F.2d 937, 214 USPQ 761 (CCPA 1982); *In re Vogel*, 422 F.2d 438, 164 USPQ 619 (CCPA 1970); *In re Thorington*, 418 F.2d 528, 163 USPQ 644 (CCPA 1969).

A timely filed terminal disclaimer in compliance with 37 CFR 1.321(c) or 1.321(d) may be used to overcome an actual or provisional rejection based on nonstatutory double patenting provided the reference application or patent either is shown to be commonly owned with the examined application, or claims an invention made as a result of activities undertaken within the scope of a joint research agreement. See MPEP § 717.02 for applications subject to examination under the first inventor to file provisions of the AIA as explained in MPEP § 2159.

See MPEP § 2146 *et seq.* for applications not subject to examination under the first inventor to file provisions of the AIA. A terminal disclaimer must be signed in compliance with 37 CFR 1.321(b).

The filing of a terminal disclaimer by itself is not a complete reply to a nonstatutory double patenting (NSDP) rejection. A complete reply requires that the terminal disclaimer be accompanied by a reply requesting reconsideration of the prior Office action. Even where the NSDP rejection is provisional the reply must be complete. See MPEP § 804, subsection I.B.1. For a reply to a non-final Office action, see 37 CFR 1.111(a). For a reply to final Office action, see 37 CFR 1.113(c). A request for reconsideration while not provided for in 37 CFR 1.113(c) may be filed after final for consideration. See MPEP §§ 706.07(e) and 714.13.

The USPTO Internet website contains terminal disclaimer forms which may be used. Please visit www.uspto.gov/patent/patents-forms. The actual filing date of the application in which the form is filed determines what form (e.g., PTO/SB/25, PTO/SB/26, PTO/AIA/25, or PTO/AIA/26) should be used. A web-based eTerminal Disclaimer may be filled out completely online using web-screens. An eTerminal Disclaimer that meets all requirements is auto-processed and approved immediately upon submission. For more information about eTerminal Disclaimers, refer to www.uspto.gov/patents/apply/applying-online/eterminal-disclaimer.

Claims 21-35 are rejected on the ground of nonstatutory double patenting as being unpatentable over claims 1-17 of U.S. Patent No. 11,452,327. Although the claims at issue are not identical, they are not patentably distinct from each other because both the instant application and US 11,452,327 teach a safety helmet with front and rear receptacles that attach to first and second accessories interchangeably (see claim 21 of the instant application with claims 1, 2 and 4 of US 11,452,327; claim 22 of the instant application with claims 1, 2 and 3 of US 11,452,327, claim 23 of the instant application with claims 1 and 2 of US 11,452,327, claims 24-25 of the instant application with claims 1, 2 and 3 of US 11,452,327, claim 26 of the instant application with claims 8 and 9 of US 11,452,327, claim 27 of the instant application with claims

1 and 6 of US 11,452,327, claim 28 of the instant application with claims 1, 6 and 7 of US 11,452,327, claim 29 of the instant application with claims 1, 8, 16 and 17 of US 11,452,327, claim 30 of the instant application with claims 1, 2 and 8-9 of US 11,452,327, claim 31 of the instant application with claims 1, 8, 16 and 17 of US 11,452,327, claim 32 of the instant application with claims 1, 3, 8, 10 of US 11,452,327, claim 33 of the instant application with claims 8 and 17 of US 11,452,327, claim 34 of the instant application with claims 1, 6, 8 and 14 of US 11,452,327, claim 35 of the instant application with claims 1, 6, 7, 8, 14 and 15 of US 11,452,327).

Conclusion

The prior art made of record and not relied upon is considered pertinent to applicant's disclosure and can be found cited in PTO-892 form submitted herewith. The cited prior art to Tulley (US 10,021,931) is of particular relevance to the claimed invention.

Any inquiry concerning this communication or earlier communications from the examiner should be directed to ALISSA L HOEY whose telephone number is (571)272-4985. The examiner can normally be reached M-F 9:00-5:30 ET.

Examiner interviews are available via telephone, in-person, and video conferencing using a USPTO supplied web-based collaboration tool. To schedule an interview, applicant is encouraged to use the USPTO Automated Interview Request (AIR) at http://www.uspto.gov/interviewpractice.

If attempts to reach the examiner by telephone are unsuccessful, the examiner's supervisor, Clinton T Ostrup can be reached on (571)272-5559. The fax phone number for the organization where this application or proceeding is assigned is 571-273-8300.

Information regarding the status of published or unpublished applications may be obtained from Patent Center. Unpublished application information in Patent Center is available to registered users. To file and manage patent submissions in Patent Center, visit:

https://patentcenter.uspto.gov. Visit https://www.uspto.gov/patents/apply/patent-center for more information about Patent Center and https://www.uspto.gov/patents/docx for information about filing in DOCX format. For additional questions, contact the Electronic Business Center (EBC) at 866-217-9197 (toll-free). If you would like assistance from a USPTO Customer Service Representative, call 800-786-9199 (IN USA OR CANADA) or 571-272-1000.

ALISSA L. HOEY
Primary Examiner
Art Unit 3732

/ALISSA L HOEY/
Primary Examiner, Art Unit 3732

United States Patent and Trademark Office

Office of the Commissioner for Patents

Dear Applicant,

You recently received an Office action from your examiner. Review of your patent application is under way! You can continue to advertise or mark any products covered by your application for your invention as "Patent Pending" for as long as this application is pending. This letter provides information about how to continue through the patent application process and the help available to you on your journey.

Where are you in the patent application process? Your patent application is now in step 3, Application Prosecution (www.uspto.gov/UtilityPatentGuide.) Though the Office action includes a "rejection," that does not mean that you don't have a good idea you can patent. It means your examiner believes your application is not yet ready for allowance.

Ready to respond? Responding to the Office action is your opportunity to address the issues raised by your examiner. Responses must be timely, complete, and in writing. In your response, you may want to consider amending your application (www.uspto.gov/patents/maintain/responding-office-actions).

We provide Pro Se Assistance, support specifically geared for independent inventors without an agent or attorney. Visit www.uspto.gov/ProSePatents for a consolidated list of resources, including a sample amendment format. Full description of amendment formatting can be found at www.uspto.gov/web/offices/pac/mpep/s714.html. Call us at 866-767-3848, or email proseassistancecenter@uspto.gov.

Have questions about the Office action? Contact your examiner! A conversation with your examiner (called an "interview") may help clarify and resolve any issues and possibly identify what you can patent. While an interview does not stop the clock for your official response or substitute for a response, there is no fee for an interview. To schedule a call or video, you can:

1. use the USPTO's Automated Interview Request (AIR) form (www.uspto.gov/patents/uspto-automated-interview-request-air-form);
2. file the Applicant Initiated Interview Request form (PTOL-413A) (www.uspto.gov/sites/default/files/documents/PTOL413A.pdf); or
3. contact your examiner directly via telephone (contact information is provided at the end of your Office action).

Need help near you? We have regional offices across the country (www.uspto.gov/locations), as well as Patent and Trademark Resource Centers in libraries in nearly every state (www.uspto.gov/ptrc), with specialists standing by to help you at no cost.

Become a *registered* electronic filer (registered eFiler). As a registered eFiler, you can electronically view your submission, track progress of your application, and respond to USPTO correspondence. (www.uspto.gov/NewPatentFilers)

Contact us

- General information: USPTO Contact Center — 800-786-9199 • TTY/TDD 800-877-8339 • www.uspto.gov/help
- Patent Center: Patent Electronic Business Center www.uspto.gov/EBC
- Inventors Assistance Center www.uspto.gov/inventorassistance

Want to learn more?

- Hear about resources for startups, inventors, and entrepreneurs, as well as our initiatives engaging women, the military community, and others. These programs offer helpful tips and tricks on identifying and managing your IP, finding options for funding, and expanding your network to support your business.
  - www.uspto.gov/startups
  - www.uspto.gov/inventors
  - www.uspto.gov/initiatives
- Access our free services all in one spot. Find all of our contact centers, nationwide services, events, education and training. (www.uspto.gov/FreeServices)
- Connect with us on Instagram, LinkedIn, Twitter, Facebook, and YouTube.
- Hear about the great things we are doing by subscribing at www.uspto.gov/subscribe.

Best,

Vaishali Udupa
Commissioner for Patents
United States Patent and Trademark Office

PTO/SB/06 (09-11)
Approved for use through 1/31/2014. OMB 0651-0032
U.S. Patent and Trademark Office; U.S. DEPARTMENT OF COMMERCE
Under the Paperwork Reduction Act of 1995, no persons are required to respond to a collection of information unless it displays a valid OMB control number.

PATENT APPLICATION FEE DETERMINATION RECORD Substitute for Form PTO-875	Application or Docket Number 17/856,628	Filing Date 07/01/2022	☐ To be Mailed

ENTITY: ☑ LARGE ☐ SMALL ☐ MICRO

APPLICATION AS FILED - PART I

FOR	(Column 1) NUMBER FILED	(Column 2) NUMBER EXTRA		RATE ($)	FEE ($)
☐ BASIC FEE (37 CFR 1.16(a), (b), or (c))	N/A	N/A		N/A	
☐ SEARCH FEE (37 CFR 1.16(k), (i), or (m))	N/A	N/A		N/A	
☐ EXAMINATION FEE (37 CFR 1.16(o), (p), or (q))	N/A	N/A		N/A	
TOTAL CLAIMS (37 CFR 1.16(i))	minus 20 =	*		x $100 =	
INDEPENDENT CLAIMS (37 CFR 1.16(h))	minus 3 =	*		x $480 =	
☐ APPLICATION SIZE FEE (37 CFR 1.16(s))	If the specification and drawings exceed 100 sheets of paper, the application size fee due is $310 ($155 for small entity) for each additional 50 sheets or fraction thereof. See 35 U.S.C. 41(a)(1)(G) and 37 CFR 1.16(s).				
☐ MULTIPLE DEPENDENT CLAIM PRESENT (37 CFR 1.16(j))					
* If the difference in column 1 is less than zero, enter "0" in column 2.				TOTAL	

APPLICATION AS AMENDED - PART II

AMENDMENT	01/02/2025	(Column 1) CLAIMS REMAINING AFTER AMENDMENT		(Column 2) HIGHEST NUMBER PREVIOUSLY PAID FOR	(Column 3) PRESENT EXTRA		RATE ($)	ADDITIONAL FEE ($)
	Total (37 CFR 1.16(i))	* 4	Minus	** 20	= 0		x $100 =	0
	Independent (37 CFR 1.16(h))	* 1	Minus	*** 3	= 0		x $480 =	0
	☐ Application Size Fee (37 CFR 1.16(s))							
	☐ FIRST PRESENTATION OF MULTIPLE DEPENDENT CLAIM (37 CFR 1.16(j))							
							TOTAL ADD'L FEE	0

AMENDMENT		(Column 1) CLAIMS REMAINING AFTER AMENDMENT		(Column 2) HIGHEST NUMBER PREVIOUSLY PAID FOR	(Column 3) PRESENT EXTRA		RATE ($)	ADDITIONAL FEE ($)
	Total (37 CFR 1.16(i))	*	Minus	**	=		x $0 =	
	Independent (37 CFR 1.16(h))	*	Minus	***	=		x $0 =	
	☐ Application Size Fee (37 CFR 1.16(s))							
	☐ FIRST PRESENTATION OF MULTIPLE DEPENDENT CLAIM (37 CFR 1.16(j))							
							TOTAL ADD'L FEE	

* If the entry in column 1 is less than the entry in column 2, write "0" in column 3.	LIE
** If the "Highest Number Previously Paid For" IN THIS SPACE is less than 20, enter "20".	/POLIN ANG/
*** If the "Highest Number Previously Paid For" IN THIS SPACE is less than 3, enter "3".	
The "Highest Number Previously Paid For" (Total or Independent) is the highest number found in the appropriate box in column 1.	

This collection of information is required by 37 CFR 1.16. The information is required to obtain or retain a benefit by the public which is to file (and by the USPTO to process) an application. Confidentiality is governed by 35 U.S.C. 122 and 37 CFR 1.14. This collection is estimated to take 12 minutes to complete, including gathering, preparing, and submitting the completed application form to the USPTO. Time will vary depending upon the individual case. Any comments on the amount of time you require to complete this form and/or suggestions for reducing this burden, should be sent to the Chief Information Officer, U.S. Patent and Trademark Office, U.S. Department of Commerce, P.O. Box 1450, Alexandria, VA 22313-1450. DO NOT SEND FEES OR COMPLETED FORMS TO THIS ADDRESS. **SEND TO: Commissioner for Patents, P.O. Box 1450, Alexandria, VA 22313-1450.**

If you need assistance in completing the form, call 1-800-PTO-9199 and select option 2.

PTO/AIA/80 (07-17)
Approved for use through 03/31/2021. OMB 0651-0035
U.S. Patent and Trademark Office; U.S. DEPARTMENT OF COMMERCE
Under the Paperwork Reduction Act of 1995, no person is required to respond to a collection of information unless it displays a valid OMB control number

POWER OF ATTORNEY TO PROSECUTE APPLICATIONS BEFORE THE USPTO

I hereby revoke all previous powers of attorney given in the application identified in the attached statement under 37 CFR 3.73(c).

I hereby appoint:

[X] Practitioners associated with Customer Number: 144588

OR

[ ] Practitioner(s) named below (if more than ten patent practitioners are to be named, then a customer number must be used):

Name	Registration Number	Name	Registration Number

As attorney(s) or agent(s) to represent the undersigned before the United States Patent and Trademark Office (USPTO) in connection with any and all patent applications assigned only to the undersigned according to the USPTO assignment records or assignment documents attached to this form in accordance with 37 CFR 3.73(c).

Please change the correspondence address for the application identified in the attached statement under 37 CFR 3.73(c) to:

[ ] The address associated with Customer Number:

OR

[ ]

Firm or individual name		
Address		
City	State	Zip
Country		
Telephone	Email	

Assignee name and address: Klein Tools, Inc.
450 Bond Street, Lincolnshire, Illinois 60069

A copy of this form, together with a statement under 37 CFR 3.73(c) (Form PTO/AIA/96 or equivalent) is required to be filed in each application in which this form is used. The statement under 37 CFR 3.73(c) may be completed by one of the practitioners appointed in this form, and must identify the application in which this Power of Attorney is to be filed.

SIGNATURE of Assignee of Record

The individual whose signature and title is supplied below is authorized to act on behalf of the assignee.

Signature /Robert J. Vechiola/	Date April, 20, 2021
Name Robert J. Vechiola	Telephone 847-821-5551
Title V.P., General Counsel & Corporate Secretary	

This collection of information is required by 37 CFR 1.31, 1.32, and 1.33. The information is required to obtain or retain a benefit by the public, which is to update (and by the USPTO to process) the file of a patent or reexamination proceeding. Confidentiality is governed by 35 U.S.C. 122 and 37 CFR 1.11 and 1.14. This collection is estimated to take 18 minutes to complete, including gathering, preparing, and submitting the completed application form to the USPTO. Time will vary depending upon the individual case. Any comments on the amount of time you require to complete this form and/or suggestions for reducing this burden, should be sent to the Chief Information Officer, U.S. Patent and Trademark Office, U.S. Department of Commerce, P.O. Box 1450, Alexandria, VA 22313-1450. DO NOT SEND FEES OR COMPLETED FORMS TO THIS ADDRESS. **SEND TO: Commissioner for Patents, P.O. Box 1450, Alexandria, VA 22313-1450.**
If you need assistance in completing the form, call 1-800-PTO-9199 and select option 2.

Privacy Act Statement

The **Privacy Act of 1974 (P.L. 93-579)** requires that you be given certain information in connection with your submission of the attached form related to a patent application or patent. Accordingly, pursuant to the requirements of the Act, please be advised that: (1) the general authority for the collection of this information is 35 U.S.C. 2(b)(2); (2) furnishing of the information solicited is voluntary; and (3) the principal purpose for which the information is used by the U.S. Patent and Trademark Office is to process and/or examine your submission related to a patent application or patent. If you do not furnish the requested information, the U.S. Patent and Trademark Office may not be able to process and/or examine your submission, which may result in termination of proceedings or abandonment of the application or expiration of the patent.

The information provided by you in this form will be subject to the following routine uses:

1. The information on this form will be treated confidentially to the extent allowed under the Freedom of Information Act (5 U.S.C. 552) and the Privacy Act (5 U.S.C 552a). Records from this system of records may be disclosed to the Department of Justice to determine whether disclosure of these records is required by the Freedom of Information Act.
2. A record from this system of records may be disclosed, as a routine use, in the course of presenting evidence to a court, magistrate, or administrative tribunal, including disclosures to opposing counsel in the course of settlement negotiations.
3. A record in this system of records may be disclosed, as a routine use, to a Member of Congress submitting a request involving an individual, to whom the record pertains, when the individual has requested assistance from the Member with respect to the subject matter of the record.
4. A record in this system of records may be disclosed, as a routine use, to a contractor of the Agency having need for the information in order to perform a contract. Recipients of information shall be required to comply with the requirements of the Privacy Act of 1974, as amended, pursuant to 5 U.S.C. 552a(m).
5. A record related to an International Application filed under the Patent Cooperation Treaty in this system of records may be disclosed, as a routine use, to the International Bureau of the World Intellectual Property Organization, pursuant to the Patent Cooperation Treaty.
6. A record in this system of records may be disclosed, as a routine use, to another federal agency for purposes of National Security review (35 U.S.C. 181) and for review pursuant to the Atomic Energy Act (42 U.S.C. 218(c)).
7. A record from this system of records may be disclosed, as a routine use, to the Administrator, General Services, or his/her designee, during an inspection of records conducted by GSA as part of that agency's responsibility to recommend improvements in records management practices and programs, under authority of 44 U.S.C. 2904 and 2906. Such disclosure shall be made in accordance with the GSA regulations governing inspection of records for this purpose, and any other relevant (*i.e.*, GSA or Commerce) directive. Such disclosure shall not be used to make determinations about individuals.
8. A record from this system of records may be disclosed, as a routine use, to the public after either publication of the application pursuant to 35 U.S.C. 122(b) or issuance of a patent pursuant to 35 U.S.C. 151. Further, a record may be disclosed, subject to the limitations of 37 CFR 1.14, as a routine use, to the public if the record was filed in an application which became abandoned or in which the proceedings were terminated and which application is referenced by either a published application, an application open to public inspection or an issued patent.
9. A record from this system of records may be disclosed, as a routine use, to a Federal, State, or local law enforcement agency, if the USPTO becomes aware of a violation or potential violation of law or regulation.

UNITED STATES
PATENT AND TRADEMARK OFFICE

P.O. Box 1450
Alexandria, VA 22313 - 1450
www.uspto.gov

ELECTRONIC ACKNOWLEDGEMENT RECEIPT

APPLICATION #	RECEIPT DATE / TIME	ATTORNEY DOCKET #
17/856,628	**01/02/2025 02:49:34 PM Z ET**	**763379**

Title of Invention

SAFETY HELMET

Application Information

APPLICATION TYPE	Utility - Nonprovisional Application under 35 USC 111(a)	PATENT #	-
CONFIRMATION #	4418	FILED BY	John Whelan
PATENT CENTER #	68582926	FILING DATE	07/01/2022
CUSTOMER #	23460	FIRST NAMED INVENTOR	Shantanu Deshpande
CORRESPONDENCE ADDRESS	-	AUTHORIZED BY	-

Documents

TOTAL DOCUMENTS: 5

DOCUMENT	PAGES	DESCRIPTION	SIZE (KB)
17856628USOwnersStatement373.pdf	3	Assignee showing of ownership per 37 CFR 3.73	115 KB
17856628TerminalDisclaimer.pdf	2	Terminal Disclaimer Filed	219 KB
17856628AmendmentandResponseAsFiled-APP.TEXT.docx	5	Application body structured text document	27 KB
PowerOfAttorney.pdf	2	Power of Attorney	201 KB
assignment.pdf	3	Assignee showing of ownership per 37 CFR 3.73	149 KB

Digest

DOCUMENT	MESSAGE DIGEST(SHA-512)
17856628USOwnersStatement373.pdf	8ED8CE0139A265822B5FEC794AA82EC3BE5E30EDBDFB0CC2EF79F4A6936E6742CCC0462AA897B1FF02EFC45E16E85DEA3C1854D36C3A8B36EFC44BA1A1258F37
17856628TerminalDisclaimer.pdf	20DE7319AD03BCE46DF27A236718F16E5F7B9D95C8EE3ED6995AC1415B7EB2FFF1CAB48A4D6594F0903AF4E8C37F221E7FDCD056EF57DD68514F8D84985190A4
17856628AmendmentandResponseAsFiled-APP.TEXT.docx	E3E3C16E684512AAE4C311B2C3B3A8466432C05C18CC6406DE43A8D6CE3CA196768D5626B1E469CD9916DF5FA8868DC006A98EE6DDD8837C715DDEB78BDC8EFF
PowerOfAttorney.pdf	55DF93D9817896BFCF74FE9C82F94385B89B5E3A91B96B516A3E3A1E6D6D9426948A7C567C0CB691E85EFF098A5181C5C5B5D49BEE960A04DB9A7DDBCAF39CF2
assignment.pdf	973F70A58522459B1C70AA0BB266E5B6BBCB5756F7BA7A6F500C95BC4511179EB49C189C29371952E9E93AE1B59F970BDB306BB1DFC9C6DC03D753FC24680D62

This Acknowledgement Receipt evidences receipt on the noted date by the USPTO of the indicated documents, characterized by the applicant, and including page counts, where applicable. It serves as evidence of receipt similar to a Post Card, as described in MPEP 503.

New Applications Under 35 U.S.C. 111

If a new application is being filed and the application includes the necessary components for filing date (see 37 CFR 1.53(b)-(d) and MPEP 506), a Filing Receipt (37 CFR 1.54) will be issued in due course and the date shown on this Acknowledgement Receipt will establish the filing date of the application

National Stage of an International Application under 35 U.S.C. 371

If a timely submission to enter the national stage of an international application is compliant with the conditions of 35 U.S.C. 371 and other applicable requirements a Form PCT/DO/EO/903 indicating acceptance of the application as a national stage submission under 35 U.S.C. 371 will be issued in addition to the Filing Receipt, in due course.

New International Application Filed with the USPTO as a Receiving Office

If a new international application is being filed and the international application includes the necessary components for an international filing date (see PCT Article 11 and MPEP 1810), a Notification of the International Application Number and of the International Filing Date (Form PCT/RO/105) will be issued in due course, subject to prescriptions concerning national security, and the date shown on this Acknowledgement Receipt will establish the international filing date of the application.

IN THE UNITED STATES PATENT AND TRADEMARK OFFICE

Patent Application No. 17/856,628

Confirmation No. 4418

First Named Inventor: Shantanu Deshpande

Filed or 371 Date: 07/01/2022

TC/AU: 3732

Examiner: Hoey, Alissa L

Commissioner for Patents

P.O. Box 1450

Alexandria, VA 22313-1450

Response to Non-Final Office Action

Commissioner:

Responsive to the Office Action dated August, 2, 2024, please enter the following amendments and consider the following remarks.

Amendments to the Claims are reflected in the listing of claims which begins on page 2 of this paper.

Remarks/Arguments begin on page 4 of this paper.

Milwaukee Electric Tool Corporation
Ex-1020
Page 149 of 189

Amendments to the Claims

Please amend the claims as follows:

1-22. (Cancelled).

23. (Currently Amended) A safety helmet system, comprising:

a safety helmet comprising:

a molded outer shell adapted to be worn by a user, the outer shell having an exterior surface defining a front side, a rear side, and a brim extending forward from the front side;

a front receptacle having a first pair of external slots and a stop, wherein each of the first pair of external slots extends upwardly along the front side of the outer shell and the stop is disposed between the first pair of external slots, and wherein the stop is integrally molded with the exterior surface of the outer shell; and

a rear receptacle disposed on the rear side on the exterior surface of the outer shell, the rear receptacle having a second pair of external slots; and

an accessory device having a mating receptacle formed thereon, at least a portion of the mating receptacle being selectively engageable with the front receptacle or the rear receptacle such that the accessory device is releasably mountable onto each of the front receptacle and the rear receptacle;

~~The safety helmet system of claim 21,~~ wherein each of the first pair of external slots of the front receptacle is a receiver slot flanked by raised walls, and the stop comprises a protruding member, wherein the accessory device includes a clip, and wherein the receiver slot aligns the accessory device therein, the raised walls retain the accessory device therebetween, and the protruding member engages the clip to releasably mount the accessory device in the front receptacle.

24. (Currently Amended) The safety helmet system of claim ~~21~~23, wherein the outer shell, the front receptacle, and the rear receptacle are formed from a common material.

25. (Previously Presented) The safety helmet system of claim 24, wherein the common material is plastic.

26. (Currently Amended) The safety helmet system of claim ~~21~~23, further including a second accessory device having a second mating receptacle formed thereon, at least a portion of the second accessory device being releasably mountable onto each of the front receptacle or the rear receptacle on the exterior of the outer shell.

27-39. (Cancelled).

Remarks/Arguments

Status of the Claims

Claims 21-39 were pending in the application.

Claims 36-39 were withdrawn from consideration

Claims 21-35 were rejected.

Claims 21, 22, and 27-39 have been cancelled herein.

Claims 23-26 have been amended herein.

Rejections

Claims 21-35 were rejected on the ground of nonstatutory double patenting as being allegedly unpatentable over claims 1-17 of U.S. Patent No. 11,452,327. Applicant has submitted a timely filed terminal disclaimer herewith to overcome the rejection. Thus, Applicant respectfully requests that this rejection be withdrawn.

Claim 23 has been amended to be in independent form, adopting all of the elements of cancelled claim 21, from which claim 23 depended. The only rejection of claim 23 was on the grounds of nonstatutory double patenting, which should be withdrawn in view of the timely filed terminal disclaimer. Accordingly, Applicant submits that, with the withdrawal of the nonstatutory double patenting rejection of claim 23, claim 23 and its dependent claims are in condition for allowance.

Claims 29 and 31 were rejected under 35 U.S.C. § 102 as being allegedly anticipated by Duderstadt (US 9,047,790). Without acquiescing that the rejection was proper, claims 29 and 31 have been cancelled herein to advance prosecution and the rejections are now moot.

Claims 21, 22, 24-28, 31, and 33 were rejected under 35 U.S.C. § 103 as being allegedly unpatentable over Duderstadt in view of Ramey (2019/0008228). Claims 29, 30, 32, 34, and 35 were rejected under 35 U.S.C. § 103 as being allegedly unpatentable over Silve et al. (US 2017/0303619) in view of Druker et al. (US 9,507,245) and Duderstadt. Without acquiescing that the rejection was proper, claims 21, 22, 27-30, and 32-35 have been cancelled herein to advance

prosecution and the rejections are now moot. Claims 24-26 now depend from allowable claim 23 and are allowable for at least this reason.

Conclusion

In view of the foregoing amendments and remarks, each of the presently pending claims are in condition for allowance, and reconsideration and allowance is requested. If, in the opinion of the Examiner, a telephone conference would expedite the prosecution of the present application, the Examiner is invited to call the undersigned attorney.

Dated: 1/2/2025

Respectfully submitted,

By_____/John Whelan/_____

John J. Whelan, Reg. No. 76,200

Klein Tools
450 Bond Street
Lincolnshire, Il 60069
(847) 821-3289 (Telephone)
Attorney for Applicant

Under the Paperwork Reduction Act of 1995, no persons are required to respond to a collection of information unless it displays a valid OMB control number.

STATEMENT UNDER 37 CFR 3.73(c)

Applicant/Patent Owner: Klein Tools, Inc.

Application No./Patent No.: 17/856,628 Filed/Issue Date: 07/01/2022

Titled: SAFETY HELMET

Klein Tools, Inc., a corporation

(Name of Assignee) (Type of Assignee, e.g., corporation, partnership, university, government agency, etc.)

states that, for the patent application/patent identified above, it is (choose **one** of options 1, 2, 3 or 4 below):

1. ☑ The assignee of the entire right, title, and interest.

2. ☐ An assignee of less than the entire right, title, and interest (check applicable box):

☐ The extent (by percentage) of its ownership interest is _____%. Additional Statement(s) by the owners holding the balance of the interest must be submitted to account for 100% of the ownership interest.

☐ There are unspecified percentages of ownership. The other parties, including inventors, who together own the entire right, title and interest are:

Additional Statement(s) by the owner(s) holding the balance of the interest must be submitted to account for the entire right, title, and interest.

3. ☐ The assignee of an undivided interest in the entirety (a complete assignment from one of the joint inventors was made). The other parties, including inventors, who together own the entire right, title, and interest are:

Additional Statement(s) by the owner(s) holding the balance of the interest must be submitted to account for the entire right, title, and interest.

4. ☐ The recipient, via a court proceeding or the like (*e.g.*, bankruptcy, probate), of an undivided interest in the entirety (a complete transfer of ownership interest was made). The certified document(s) showing the transfer is attached.

The interest identified in option 1, 2 or 3 above (not option 4) is evidenced by either (choose **one** of options A or B below):

A. ☑ An assignment from the inventor(s) of the patent application/patent identified above. The assignment was recorded in the United States Patent and Trademark Office at Reel _____, Frame _____, or for which a copy thereof is attached.

B. ☐ A chain of title from the inventor(s), of the patent application/patent identified above, to the current assignee as follows:

1. From: _____ To: _____

The document was recorded in the United States Patent and Trademark Office at

Reel _____, Frame _____, or for which a copy thereof is attached.

2. From: _____ To: _____

The document was recorded in the United States Patent and Trademark Office at

Reel _____, Frame _____, or for which a copy thereof is attached.

This collection of information is required by 37 CFR 3.73(b). The information is required to obtain or retain a benefit by the public which is to file (and by the USPTO to process) an application. Confidentiality is governed by 35 U.S.C. 122 and 37 CFR 1.11 and 1.14. This collection is estimated to take 12 minutes to complete, including gathering, preparing, and submitting the completed application form to the USPTO. Time will vary depending upon the individual case. Any comments on the amount of time you require to complete this form and/or suggestions for reducing this burden, should be sent to the Chief Information Officer, U.S. Patent and Trademark Office, U.S. Department of Commerce, P.O. Box 1450, Alexandria, VA 22313-1450. DO NOT SEND FEES OR COMPLETED FORMS TO THIS ADDRESS. **SEND TO: Commissioner for Patents, P.O. Box 1450, Alexandria, VA 22313-1450**.

If you need assistance in completing the form, call 1-800-PTO-9199 and select option 2.

Under the Paperwork Reduction Act of 1995, no persons are required to respond to a collection of information unless it displays a valid OMB control number.

STATEMENT UNDER 37 CFR 3.73(c)

3. From: _____ To: _____

The document was recorded in the United States Patent and Trademark Office at

Reel _____, Frame _____, or for which a copy thereof is attached.

4. From: _____ To: _____

The document was recorded in the United States Patent and Trademark Office at

Reel _____, Frame _____, or for which a copy thereof is attached.

5. From: _____ To: _____

The document was recorded in the United States Patent and Trademark Office at

Reel _____, Frame _____, or for which a copy thereof is attached.

6. From: _____ To: _____

The document was recorded in the United States Patent and Trademark Office at

Reel _____, Frame _____, or for which a copy thereof is attached.

☐ Additional documents in the chain of title are listed on a supplemental sheet(s).

☑ As required by 37 CFR 3.73(c)(1)(i), the documentary evidence of the chain of title from the original owner to the assignee was, or concurrently is being, submitted for recordation pursuant to 37 CFR 3.11.

[NOTE: A separate copy (i.e., a true copy of the original assignment document(s)) must be submitted to Assignment Division in accordance with 37 CFR Part 3, to record the assignment in the records of the USPTO. See MPEP 302.08]

The undersigned (whose title is supplied below) is authorized to act on behalf of the assignee.

/John J. Whelan/	01-02-2025
Signature	Date
John Whelan	76200
Printed or Typed Name	Title or Registration Number

Privacy Act Statement

The **Privacy Act of 1974 (P.L. 93-579)** requires that you be given certain information in connection with your submission of the attached form related to a patent application or patent. Accordingly, pursuant to the requirements of the Act, please be advised that: (1) the general authority for the collection of this information is 35 U.S.C. 2(b)(2); (2) furnishing of the information solicited is voluntary; and (3) the principal purpose for which the information is used by the U.S. Patent and Trademark Office is to process and/or examine your submission related to a patent application or patent. If you do not furnish the requested information, the U.S. Patent and Trademark Office may not be able to process and/or examine your submission, which may result in termination of proceedings or abandonment of the application or expiration of the patent.

The information provided by you in this form will be subject to the following routine uses:

1. The information on this form will be treated confidentially to the extent allowed under the Freedom of Information Act (5 U.S.C. 552) and the Privacy Act (5 U.S.C 552a). Records from this system of records may be disclosed to the Department of Justice to determine whether disclosure of these records is required by the Freedom of Information Act.
2. A record from this system of records may be disclosed, as a routine use, in the course of presenting evidence to a court, magistrate, or administrative tribunal, including disclosures to opposing counsel in the course of settlement negotiations.
3. A record in this system of records may be disclosed, as a routine use, to a Member of Congress submitting a request involving an individual, to whom the record pertains, when the individual has requested assistance from the Member with respect to the subject matter of the record.
4. A record in this system of records may be disclosed, as a routine use, to a contractor of the Agency having need for the information in order to perform a contract. Recipients of information shall be required to comply with the requirements of the Privacy Act of 1974, as amended, pursuant to 5 U.S.C. 552a(m).
5. A record related to an International Application filed under the Patent Cooperation Treaty in this system of records may be disclosed, as a routine use, to the International Bureau of the World Intellectual Property Organization, pursuant to the Patent Cooperation Treaty.
6. A record in this system of records may be disclosed, as a routine use, to another federal agency for purposes of National Security review (35 U.S.C. 181) and for review pursuant to the Atomic Energy Act (42 U.S.C. 218(c)).
7. A record from this system of records may be disclosed, as a routine use, to the Administrator, General Services, or his/her designee, during an inspection of records conducted by GSA as part of that agency's responsibility to recommend improvements in records management practices and programs, under authority of 44 U.S.C. 2904 and 2906. Such disclosure shall be made in accordance with the GSA regulations governing inspection of records for this purpose, and any other relevant (*i.e.*, GSA or Commerce) directive. Such disclosure shall not be used to make determinations about individuals.
8. A record from this system of records may be disclosed, as a routine use, to the public after either publication of the application pursuant to 35 U.S.C. 122(b) or issuance of a patent pursuant to 35 U.S.C. 151. Further, a record may be disclosed, subject to the limitations of 37 CFR 1.14, as a routine use, to the public if the record was filed in an application which became abandoned or in which the proceedings were terminated and which application is referenced by either a published application, an application open to public inspection or an issued patent.
9. A record from this system of records may be disclosed, as a routine use, to a Federal, State, or local law enforcement agency, if the USPTO becomes aware of a violation or potential violation of law or regulation.

UNITED STATES
PATENT AND TRADEMARK OFFICE

P.O. Box 1450
Alexandria, VA 22313 - 1450
www.uspto.gov

ELECTRONIC PAYMENT RECEIPT

APPLICATION #	RECEIPT DATE / TIME	ATTORNEY DOCKET #
17/856,628	**01/02/2025 02:49:34 PM Z ET**	**763379**

Title of Invention

SAFETY HELMET

Application Information

APPLICATION TYPE	Utility - Nonprovisional Application under 35 USC 111(a)	PATENT #	-
CONFIRMATION #	4418	FILED BY	John Whelan
PATENT CENTER #	68582926	AUTHORIZED BY	-
CUSTOMER #	23460	FILING DATE	07/01/2022
CORRESPONDENCE ADDRESS	-	FIRST NAMED INVENTOR	Shantanu Deshpande

Payment Information

PAYMENT METHOD	PAYMENT TRANSACTION ID	PAYMENT AUTHORIZED BY
DA / 602056	**E202512E53596542**	**John Whelan**

PRE-AUTHORIZED ACCOUNT	PRE-AUTHORIZED CATEGORY
602056	**37 CFR 1.20 (Post Issuance fees); 37 CFR 1.21 (Miscellaneous fees and charges)**

FEE CODE	DESCRIPTION	ITEM PRICE($)	QUANTITY	ITEM TOTAL($)
1252	EXTENSION FOR RESPONSE WITHIN SECOND MONTH	640.00	1	640.00
1814	STATUTORY DISCLAIMER, INCLUDING TERMINAL DISCLAIMER	170.00	1	170.00
			TOTAL AMOUNT:	**$810.00**

This Acknowledgement Receipt evidences receipt on the noted date by the USPTO of the indicated documents, characterized by the applicant, and including page counts, where applicable. It serves as evidence of receipt similar to a Post Card, as described in MPEP 503.

New Applications Under 35 U.S.C. 111

If a new application is being filed and the application includes the necessary components for filing date (see 37 CFR 1.53(b)-(d) and MPEP 506), a Filing Receipt (37 CFR 1.54) will be issued in due course and the date shown on this Acknowledgement Receipt will establish the filing date of the application

National Stage of an International Application under 35 U.S.C. 371

If a timely submission to enter the national stage of an international application is compliant with the conditions of 35 U.S.C. 371 and other applicable requirements a Form PCT/DO/EO/903 indicating acceptance of the application as a national stage submission under 35 U.S.C. 371 will be issued in addition to the Filing Receipt, in due course.

New International Application Filed with the USPTO as a Receiving Office

If a new international application is being filed and the international application includes the necessary components for an international filing date (see PCT Article 11 and MPEP 1810), a Notification of the International Application Number and of the International Filing Date (Form PCT/RO/105) will be issued in due course, subject to prescriptions concerning national security, and the date shown on this Acknowledgement Receipt will establish the international filing date of the application.

PTO/AIA/26 (04-14)
Approved for use through 05/31/2024. OMB 0651-0031
U.S. Patent and Trademark Office; U.S. DEPARTMENT OF COMMERCE
Under the Paperwork Reduction Act of 1995, no persons are required to respond to a collection of information unless it displays a valid OMB control number.

TERMINAL DISCLAIMER TO OBVIATE A DOUBLE PATENTING REJECTION OVER A "PRIOR" PATENT

Docket Number (Optional) 763379

In re Application of: Shantanu Deshpane

Application No.: 17/856,628

Filed: 07/01/2022

For: SAFETY HELMET

The applicant, Klein Tools, Inc., owner of 100 percent interest in the instant application hereby disclaims, except as provided below, the terminal part of the statutory term of any patent granted on the instant application which would extend beyond the expiration date of the full statutory term of **prior patent** No. 11,452,327 as the term of said **prior patent** is presently shortened by any terminal disclaimer. The applicant hereby agrees that any patent so granted on the instant application shall be enforceable only for and during such period that it and the **prior patent** are commonly owned. This agreement runs with any patent granted on the instant application and is binding upon the grantee, its successors or assigns.

In making the above disclaimer, the applicant does not disclaim the terminal part of the term of any patent granted on the instant application that would extend to the expiration date of the full statutory term of the **prior patent**, "as the term of said **prior patent** is presently shortened by any terminal disclaimer," in the event that said **prior patent** later:

expires for failure to pay a maintenance fee;
is held unenforceable;
is found invalid by a court of competent jurisdiction;
is statutorily disclaimed in whole or terminally disclaimed under 37 CFR 1.321;
has all claims canceled by a reexamination certificate;
is reissued; or
is in any manner terminated prior to the expiration of its full statutory term as presently shortened by any terminal disclaimer.

Check either box 1 or 2 below, if appropriate.

1. ☐ The undersigned is the applicant. If the applicant is an assignee, the undersigned is authorized to act on behalf of the assignee.

I hereby acknowledge that any willful false statements made are punishable under 18 U.S.C. 1001 by fine or imprisonment of not more than five (5) years, or both.

2. ☑ The undersigned is an attorney or agent of record. Reg. No. 76200

/John J. Whelan/ — Signature
1/2/2025 — Date

John Whelan — Typed or printed name

Attorney — Title
847-821-3289 — Telephone Number

☑ Terminal disclaimer fee under 37 CFR 1.20(d) included.

WARNING: Information on this form may become public. Credit card information should not be included on this form. Provide credit card information and authorization on PTO-2038.

A Federal agency may not conduct or sponsor, and a person is not required to respond to, nor shall a person be subject to a penalty for failure to comply with an information collection subject to the requirements of the Paperwork Reduction Act of 1995, unless the information collection has a currently valid OMB Control Number. The OMB Control Number for this information collection is 0651-0031. Public burden for this form is estimated to average 12 minutes per response, including the time for reviewing instructions, searching existing data sources, gathering and maintaining the data needed, and completing and reviewing the information collection. Send comments regarding this burden estimate or any other aspect of this information collection, including suggestions for reducing this burden to the Chief Administrative Officer, United States Patent and Trademark Office, P.O. Box 1450, Alexandria, VA 22313-1450 or email InformationCollection@uspto.gov. DO NOT SEND FEES OR COMPLETED FORMS TO THIS ADDRESS. **If filing this completed form by mail, send to: Commissioner for Patents, P.O. Box 1450, Alexandria, VA 22313-1450.**

If you need assistance in completing the form, call 1-800-PTO-9199 and select option 2.

Privacy Act Statement

The Privacy Act of 1974 (P.L. 93-579) requires that you be given certain information in connection with your submission of the attached form related to a patent application or patent. The United States Patent and Trademark Office (USPTO) collects the information in this record under authority of 35 U.S.C. 2. The USPTO's system of records is used to manage all applicant and owner information including name, citizenship, residence, post office address, and other information with respect to inventors and their legal representatives pertaining to the applicant's/owner's activities in connection with the invention for which a patent is sought or has been granted. The applicable Privacy Act System of Records Notice for the information collected in this form is COMMERCE/PAT-TM-7 Patent Application Files, available in the Federal Register at 78 FR 19243 (March 29, 2013). https://www.govinfo.gov/content/pkg/FR-2013-03-29/pdf/2013-07341.pdf

Routine uses of the information in this record may include disclosure to: 1) law enforcement, in the event that the system of records indicates a violation or potential violation of law; 2) a Federal, state, local, or international agency, in response to its request; 3) a contractor of the USPTO having need for the information in order to perform a contract; 4) the Department of Justice for determination of whether the Freedom of Information Act (FOIA) requires disclosure of the record; 5) a Member of Congress submitting a request involving an individual to whom the record pertains, when the individual has requested the Member's assistance with respect to the subject matter of the record; 6) a court, magistrate, or administrative tribunal, in the course of presenting evidence, including disclosures to opposing counsel in the course of settlement negotiations; 7) the Administrator, General Services Administration (GSA), or their designee, during an inspection of records conducted by GSA under authority of 44 U.S.C. 2904 and 2906, in accordance with the GSA regulations and any other relevant (i.e., GSA or Commerce) directive, where such disclosure shall not be used to make determinations about individuals; 8) another federal agency for purposes of National Security review (35 U.S.C. 181) and for review pursuant to the Atomic Energy Act (42 U.S.C. 218(c)); 9) the Office of Personnel Management (OPM) for personnel research purposes; and 9) the Office of Management and Budget (OMB) for legislative coordination and clearance.

If you do not furnish the information requested on this form, the USPTO may not be able to process and/or examine your submission, which may result in termination of proceedings, abandonment of the application, and/or expiration of the patent.

Additional Uses

Additional USPTO uses of the information in this record may include disclosure to: 1) the International Bureau of the World Intellectual Property Organization, if the record is related to an international application filed under the Patent Cooperation Treaty; 2) the public i) after publication of the application pursuant to 35 U.S.C. 122(b), ii) after issuance of a patent pursuant to 35 U.S.C. 151, iii) if the record was filed in an application which became abandoned or in which the proceedings were terminated and which application is referenced by either a published application, an application open to public inspections, or an issued patent, or iv) without publication of the application or patent under the specific circumstances provided for by 37 CFR 1.14(a)(1)(v)-(vii); and/or 3) the National Archives and Records Administration, for inspection of records.

ASSIGNMENT

WHEREAS, I/WE

(1) Shantanu Deshpande of 4311 Crescent Lane, Glenview, IL 60026, and

(2) Kingston Wong of 12070 W. Wakefield Dr., Beach Park, IL 60083,

hereinafter referred to as Assignor, have invented a certain invention entitled:

SAFETY HELMET

for which invention an application (provisional or non-provisional) for a U.S. patent was filed on January 14, 2019, under U.S. Patent Application No. 16/246,935, and

WHEREAS, Klein Tools, Inc. of 450 Bond Street, Lincolnshire, IL 60069, hereinafter referred to as Assignee, is desirous of acquiring the entire right, title, and interest in, to, and under the invention described in the patent application, including the entire priority right derived from the application,

NOW, THEREFORE, for good and valuable consideration, the receipt and sufficiency of which is hereby acknowledged,

Assignor assigns and transfers to Assignee the entire right, title, and interest in, to, and under the invention, the referenced patent application, other such applications (e.g., provisional applications, non-provisional applications, continuations, continuations-in-part, divisionals, reissues, reexaminations, national and regional phase applications, petty patent applications, and utility model applications) that may be filed in the U.S. and/or any country foreign to the U.S. on the invention, the patents that may issue thereon, and the patents as may be modified as the result of applicable procedures (e.g., supplemental examinations, ex parte reexaminations, inter partes reexaminations, inter partes reviews, post-grant reviews, and oppositions),

Assignor conveys to the Assignee the right to make applications in Assignee's own behalf for protection of the invention in the U.S. and countries foreign to the U.S. and to claim priority to the referenced patent application and other such applications that may be filed in the U.S. or any country foreign to the U.S. on the invention under the Patent Cooperation Treaty, the Paris Convention, and any other international arrangements,

Assignor will not execute any writing or do any act conflicting with the terms of this assignment,

Assignor will at any time upon request, without further or additional consideration, but at the expense of the Assignee, execute such additional assignments and other writings and do such additional acts as the Assignee may deem necessary or desirable to pursue the patent applications identified herein, including, but not limited to, rendering all necessary assistance in making

applications for and obtaining patents that may issue thereon in the U.S. and any countries foreign to the U.S. on the invention, and in enforcing any rights accruing as a result of such applications or patents, by, for example, executing statements and other affidavits,

Assignor and Assignee agree the terms of this assignment shall bind, and inure to the benefit of, the legal representatives, successors, and assigns of all parties hereto,

Assignor authorizes Assignee to insert in this assignment the number and filing date of the application if the number and filing date of the application are not recited herein at the time of execution of this assignment by any or all of the parties hereto,

Assignor and Assignee agree that U.S. law governs this assignment, and

Assignee acknowledges and accepts this assignment.

IN WITNESS WHEREOF, Assignor has hereunder set his/her hand on the date shown below.

Date 07/16/2019 Assignor: Shantanu Deshpande

Date 07/16/2019 Witness: William Barenti

Date 07/16/2019 Witness: Carl Behlmer

Milwaukee Electric Tool Corporation
Ex-1020
Page 162 of 189

In re Appln. of Deshpande et al.
Attorney Docket No. 741300

Date 07/16/2019 Assignor: Kingston Wong

Date 07/16/2019 Witness: William Barone

Date 07/16/2019 Witness: Carl Behlmer

Application Number	Application/Control No.	Applicant(s)/Patent under Reexamination	
* 17/856,628 *	17/856,628	Deshpande et al.	
	Examiner	**Art Unit**	
	HOEY, ALISSA L	3732	

Document Code - DISQ	**Internal Document - DO NOT MAIL**

TERMINAL DISCLAIMER	☑ APPROVED	☐ DISAPPROVED
Date Filed: **02 January 2025**	**This patent is subject to a Terminal Disclaimer**	

Approved/Disapproved by:

/LAWANA R HIXON/

Technology Center: **OPLC**

Telephone: **(571)272-6074**

_____

UNITED STATES PATENT AND TRADEMARK OFFICE

UNITED STATES DEPARTMENT OF COMMERCE
United States Patent and Trademark Office
Address: COMMISSIONER FOR PATENTS
P.O. Box 1450
Alexandria, Virginia 22313-1450
www.uspto.gov

APPLICATION NUMBER	FILING OR 371(C) DATE	FIRST NAMED APPLICANT	ATTY. DOCKET NO./TITLE
17/856,628	07/01/2022	Shantanu Deshpande	763379

CONFIRMATION NO. 4418

POA ACCEPTANCE LETTER

OC000000082649313

144588
Klein Tools, Inc
450 Bond Street
Lincolnshire, IL 60069

Date Mailed: 01/08/2025

NOTICE OF ACCEPTANCE OF POWER OF ATTORNEY

This is in response to the Power of Attorney filed 01/02/2025.

The Power of Attorney in this application is accepted. Correspondence in this application will be mailed to the above address as provided by 37 CFR 1.33.

Questions about the contents of this notice and the requirements it sets forth should be directed to the Office of Data Management, Application Assistance Unit, at **(571) 272-4000** or **(571) 272-4200** or **1-888-786-0101**.

/atesfai/

UNITED STATES PATENT AND TRADEMARK OFFICE

UNITED STATES DEPARTMENT OF COMMERCE
United States Patent and Trademark Office
Address: COMMISSIONER FOR PATENTS
P.O. Box 1450
Alexandria, Virginia 22313-1450
www.uspto.gov

APPLICATION NUMBER	FILING OR 371(C) DATE	FIRST NAMED APPLICANT	ATTY. DOCKET NO./TITLE
17/856,628	07/01/2022	Shantanu Deshpande	763379

CONFIRMATION NO. 4418

POWER OF ATTORNEY NOTICE

OC000000082649275

23460
LEYDIG VOIT & MAYER, LTD
TWO PRUDENTIAL PLAZA, SUITE 4900
180 NORTH STETSON AVENUE
CHICAGO, IL 60601-6731

Date Mailed: 01/08/2025

NOTICE REGARDING CHANGE OF POWER OF ATTORNEY

This is in response to the Power of Attorney filed 01/02/2025.

- The Power of Attorney to you in this application has been revoked by the applicant. Future correspondence will be mailed to the new address of record(37 CFR 1.33).

Questions about the contents of this notice and the requirements it sets forth should be directed to the Office of Data Management, Application Assistance Unit, at **(571) 272-4000** or **(571) 272-4200** or **1-888-786-0101**.

/atesfai/

UNITED STATES PATENT AND TRADEMARK OFFICE

UNITED STATES DEPARTMENT OF COMMERCE
United States Patent and Trademark Office
Address: COMMISSIONER FOR PATENTS
P.O. Box 1450
Alexandria, Virginia 22313-1450
www.uspto.gov

NOTICE OF ALLOWANCE AND FEE(S) DUE

144588 7590 02/18/2025
Klein Tools, Inc
450 Bond Street
Lincolnshire, IL 60069

EXAMINER
HOEY, ALISSA L

ART UNIT	PAPER NUMBER
3732	

DATE MAILED: 02/18/2025

APPLICATION NO.	FILING DATE	FIRST NAMED INVENTOR	ATTORNEY DOCKET NO.	CONFIRMATION NO.
17/856,628	07/01/2022	Shantanu Deshpande	763379	4418

TITLE OF INVENTION: SAFETY HELMET

APPLN. TYPE	ENTITY STATUS	ISSUE FEE DUE	PUBLICATION FEE DUE	PREV. PAID ISSUE FEE	TOTAL FEE(S) DUE	DATE DUE
nonprovisional	UNDISCOUNTED	$1290	$0.00	$0.00	$1290	05/19/2025

THE APPLICATION IDENTIFIED ABOVE HAS BEEN EXAMINED AND IS ALLOWED FOR ISSUANCE AS A PATENT. PROSECUTION ON THE MERITS IS CLOSED. THIS NOTICE OF ALLOWANCE IS NOT A GRANT OF PATENT RIGHTS. THIS APPLICATION IS SUBJECT TO WITHDRAWAL FROM ISSUE AT THE INITIATIVE OF THE OFFICE OR UPON PETITION BY THE APPLICANT. SEE 37 CFR 1.313 AND MPEP 1308.

THE ISSUE FEE AND PUBLICATION FEE (IF REQUIRED) MUST BE PAID WITHIN THREE MONTHS FROM THE MAILING DATE OF THIS NOTICE OR THIS APPLICATION SHALL BE REGARDED AS ABANDONED. THIS STATUTORY PERIOD CANNOT BE EXTENDED. SEE 35 U.S.C. 151. THE ISSUE FEE DUE INDICATED ABOVE DOES NOT REFLECT A CREDIT FOR ANY PREVIOUSLY PAID ISSUE FEE IN THIS APPLICATION. IF AN ISSUE FEE HAS PREVIOUSLY BEEN PAID IN THIS APPLICATION (AS SHOWN ABOVE), THE RETURN OF PART B OF THIS FORM WILL BE CONSIDERED A REQUEST TO REAPPLY THE PREVIOUSLY PAID ISSUE FEE TOWARD THE ISSUE FEE NOW DUE.

HOW TO REPLY TO THIS NOTICE:

I. Review the ENTITY STATUS shown above. If the ENTITY STATUS is shown as SMALL or MICRO, verify whether entitlement to that entity status still applies.

If the ENTITY STATUS is the same as shown above, pay the TOTAL FEE(S) DUE shown above.

If the ENTITY STATUS is changed from that shown above, on PART B - FEE(S) TRANSMITTAL, complete section number 5 titled "Change in Entity Status (from status indicated above)".

For purposes of this notice, small entity fees are 40% the amount of undiscounted fees, and micro entity fees are 20% the amount of undiscounted fees.

II. PART B - FEE(S) TRANSMITTAL, or its equivalent, must be completed and returned to the United States Patent and Trademark Office (USPTO) with your ISSUE FEE and PUBLICATION FEE (if required). If you are charging the fee(s) to your deposit account, section "4b" of Part B - Fee(s) Transmittal should be completed. If an equivalent of Part B is filed, a request to reapply a previously paid issue fee must be clearly made, and delays in processing may occur due to the difficulty in recognizing the paper as an equivalent of Part B.

III. All communications regarding this application must give the application number. Please direct all communications prior to issuance to Mail Stop ISSUE FEE unless advised to the contrary.

IMPORTANT REMINDER: Maintenance fees are due in utility patents issuing on applications filed on or after Dec. 12, 1980. It is patentee's responsibility to ensure timely payment of maintenance fees when due. More information is available at www.uspto.gov/PatentMaintenanceFees.

PART B - FEE(S) TRANSMITTAL

Complete and send this form, together with applicable fee(s), by mail or fax, or via the USPTO patent electronic filing system.

By mail, send to: Mail Stop ISSUE FEE
Commissioner for Patents
P.O. Box 1450
Alexandria, Virginia 22313-1450

By fax, send to: (571)-273-2885

INSTRUCTIONS: This form should be used for transmitting the ISSUE FEE and PUBLICATION FEE (if required). Blocks 1 through 5 should be completed where appropriate. All further correspondence will be mailed to the current correspondence address as indicated unless corrected below or directed otherwise in Block 1, by (a) specifying a new correspondence address; and/or (b) indicating a separate "FEE ADDRESS" for maintenance fee notifications. **Because electronic patent issuance may occur shortly after issue fee payment, any desired continuing application should preferably be filed prior to payment of this issue fee in order not to jeopardize copendency.**

CURRENT CORRESPONDENCE ADDRESS (Note: Use Block 1 for any change of address)

144588 7590 02/18/2025
Klein Tools, Inc
450 Bond Street
Lincolnshire, IL 60069

Note: A certificate of mailing can only be used for domestic mailings of the Fee(s) Transmittal. This certificate cannot be used for any other accompanying papers. Each additional paper, such as an assignment or formal drawing, must have its own certificate of mailing or transmission.

Certificate of Mailing or Transmission

I hereby certify that this Fee(s) Transmittal is being deposited with the United States Postal Service with sufficient postage for first class mail in an envelope addressed to the Mail Stop ISSUE FEE address above, or being transmitted to the USPTO via the USPTO patent electronic filing system or by facsimile to (571) 273-2885, on the date below.

(Typed or printed name)
(Signature)
(Date)

APPLICATION NO.	FILING DATE	FIRST NAMED INVENTOR	ATTORNEY DOCKET NO.	CONFIRMATION NO.
17/856,628	07/01/2022	Shantanu Deshpande	763379	4418

TITLE OF INVENTION: SAFETY HELMET

APPLN. TYPE	ENTITY STATUS	ISSUE FEE DUE	PUBLICATION FEE DUE	PREV. PAID ISSUE FEE	TOTAL FEE(S) DUE	DATE DUE
nonprovisional	UNDISCOUNTED	$1290	$0.00	$0.00	$1290	05/19/2025

EXAMINER	ART UNIT	CLASS-SUBCLASS
HOEY, ALISSA L	3732	002-422000

1. Change of correspondence address or indication of "Fee Address" (37 CFR 1.363).

❑ Change of correspondence address (or Change of Correspondence Address form PTO/AIA/122 or PTO/SB/122) attached.

❑ "Fee Address" indication (or "Fee Address" Indication form PTO/AIA/47 or PTO/SB/47; Rev 03-02 or more recent) attached. **Use of a Customer Number is required.**

2. For printing on the patent front page, list
(1) The names of up to 3 registered patent attorneys or agents OR, alternatively,
(2) The name of a single firm (having as a member a registered attorney or agent) and the names of up to 2 registered patent attorneys or agents. If no name is listed, no name will be printed.

1_____
2_____
3_____

3. ASSIGNEE NAME AND RESIDENCE DATA TO BE PRINTED ON THE PATENT (print or type)

PLEASE NOTE: Unless an assignee is identified below, no assignee data will appear on the patent. If an assignee is identified below, the document must have been previously recorded, or filed for recordation, as set forth in 37 CFR 3.11 and 37 CFR 3.81(a). Completion of this form is NOT a substitute for filing an assignment.

(A) NAME OF ASSIGNEE (B) RESIDENCE: (CITY and STATE OR COUNTRY)

Please check the appropriate assignee category or categories (will not be printed on the patent) : ❑ Individual ❑ Corporation or other private group entity ❑ Government

4a. Fees submitted: ❑Issue Fee ❑Publication Fee (if required)

4b. Method of Payment: *(Please first reapply any previously paid fee shown above)*

❑ Electronic Payment via the USPTO patent electronic filing system ❑ Enclosed check ❑ Non-electronic payment by credit card (Attach form PTO-2038)

❑ The Director is hereby authorized to charge the required fee(s), any deficiency, or credit any overpayment to Deposit Account No. _____

5. **Change in Entity Status** (from status indicated above)

❑ Applicant certifying micro entity status. See 37 CFR 1.29

NOTE: Absent a valid certification of Micro Entity Status (see forms PTO/SB/15A and 15B), issue fee payment in the micro entity amount will not be accepted at the risk of application abandonment.

❑ Applicant asserting small entity status. See 37 CFR 1.27

NOTE: If the application was previously under micro entity status, checking this box will be taken to be a notification of loss of entitlement to micro entity status.

❑ Applicant changing to regular undiscounted fee status.

NOTE: Checking this box will be taken to be a notification of loss of entitlement to small or micro entity status, as applicable.

NOTE: This form must be signed in accordance with 37 CFR 1.31 and 1.33. See 37 CFR 1.4 for signature requirements and certifications.

Authorized Signature _____ Date _____

Typed or printed name _____ Registration No. _____

UNITED STATES DEPARTMENT OF COMMERCE
United States Patent and Trademark Office
Address: COMMISSIONER FOR PATENTS
P.O. Box 1450
Alexandria, Virginia 22313-1450
www.uspto.gov

APPLICATION NO.	FILING DATE	FIRST NAMED INVENTOR	ATTORNEY DOCKET NO.	CONFIRMATION NO.
17/856,628	07/01/2022	Shantanu Deshpande	763379	4418

144588 7590 02/18/2025
Klein Tools, Inc
450 Bond Street
Lincolnshire, IL 60069

EXAMINER
HOEY, ALISSA L

ART UNIT	PAPER NUMBER
3732	

DATE MAILED: 02/18/2025

Determination of Patent Term Adjustment under 35 U.S.C. 154 (b)
(Applications filed on or after May 29, 2000)

The Office has discontinued providing a Patent Term Adjustment (PTA) calculation with the Notice of Allowance.

Section 1(h)(2) of the AIA Technical Corrections Act amended 35 U.S.C. 154(b)(3)(B)(i) to eliminate the requirement that the Office provide a patent term adjustment determination with the notice of allowance. See Revisions to Patent Term Adjustment, 78 Fed. Reg. 19416, 19417 (Apr. 1, 2013). Therefore, the Office is no longer providing an initial patent term adjustment determination with the notice of allowance. The Office will continue to provide a patent term adjustment determination with the Issue Notification Letter that is mailed to applicant approximately three weeks prior to the issue date of the patent, and will include the patent term adjustment on the patent. Any request for reconsideration of the patent term adjustment determination (or reinstatement of patent term adjustment) should follow the process outlined in 37 CFR 1.705.

Any questions regarding the Patent Term Extension or Adjustment determination should be directed to the Office of Patent Legal Administration at (571)-272-7702. Questions relating to issue and publication fee payments should be directed to the Customer Service Center of the Office of Patent Publication at 1-(888)-786-0101 or (571)-272-4200.

OMB Clearance and PRA Burden Statement for PTOL-85 Part B

The Paperwork Reduction Act (PRA) of 1995 requires Federal agencies to obtain Office of Management and Budget approval before requesting most types of information from the public. When OMB approves an agency request to collect information from the public, OMB (i) provides a valid OMB Control Number and expiration date for the agency to display on the instrument that will be used to collect the information and (ii) requires the agency to inform the public about the OMB Control Number's legal significance in accordance with 5 CFR 1320.5(b).

The information collected by PTOL-85 Part B is required by 37 CFR 1.311. The information is required to obtain or retain a benefit by the public which is to file (and by the USPTO to process) an application. Confidentiality is governed by 35 U.S.C. 122 and 37 CFR 1.14. This collection is estimated to take 30 minutes to complete, including gathering, preparing, and submitting the completed application form to the USPTO. Time will vary depending upon the individual case. Any comments on the amount of time you require to complete this form and/or suggestions for reducing this burden, should be sent to the Chief Information Officer, U.S. Patent and Trademark Office, U.S. Department of Commerce, P.O. Box 1450, Alexandria, Virginia 22313-1450. DO NOT SEND FEES OR COMPLETED FORMS TO THIS ADDRESS. SEND TO: Commissioner for Patents, P.O. Box 1450, Alexandria, Virginia 22313-1450. Under the Paperwork Reduction Act of 1995, no persons are required to respond to a collection of information unless it displays a valid OMB control number.

Privacy Act Statement

The Privacy Act of 1974 (P.L. 93-579) requires that you be given certain information in connection with your submission of the attached form related to a patent application or patent. The United States Patent and Trademark Office (USPTO) collects the information in this record under authority of 35 U.S.C. 2. The USPTO's system of records is used to manage all applicant and owner information including name, citizenship, residence, post office address, and other information with respect to inventors and their legal representatives pertaining to the applicant's/owner's activities in connection with the invention for which a patent is sought or has been granted. The applicable Privacy Act System of Records Notice for the information collected in this form is COMMERCE/PAT-TM-7 Patent Application Files, available in the Federal Register at 78 FR 19243 (March 29, 2013).
https://www.govinfo.gov/content/pkg/FR-2013-03-29/pdf/2013-07341.pdf

Routine uses of the information in this record may include disclosure to:

1) law enforcement, in the event that the system of records indicates a violation or potential violation of law;
2) a federal, state, local, or international agency, in response to its request;
3) a contractor of the USPTO having need for the information in order to perform a contract;
4) the Department of Justice for determination of whether the Freedom of Information Act (FOIA) requires disclosure of the record;
5) a Member of Congress submitting a request involving an individual to whom the record pertains, when the individual has requested the Member's assistance with respect to the subject matter of the record;
6) a court, magistrate, or administrative tribunal, in the course of presenting evidence, including disclosures to opposing counsel in the course of settlement negotiations;
7) the Administrator, General Services Administration (GSA), or their designee, during an inspection of records conducted by GSA under authority of 44 U.S.C. 2904 and 2906, in accordance with the GSA regulations and any other relevant (i.e., GSA or Commerce) directive, where such disclosure shall not be used to make determinations about individuals;
8) another federal agency for purposes of National Security review (35 U.S.C. 181) and for review pursuant to the Atomic Energy Act (42 U.S.C. 218(c));
9) the Office of Personnel Management (OPM) for personnel research purposes; and
10) the Office of Management and Budget (OMB) for legislative coordination and clearance.

If you do not furnish the information requested on this form, the USPTO may not be able to process and/or examine your submission, which may result in termination of proceedings, abandonment of the application, and/or expiration of the patent.

Notice of Allowability	Application No. 17/856,628	Applicant(s) Deshpande et al.	
	Examiner ALISSA L HOEY	Art Unit 3732	AIA (FITF) Status Yes

-- The MAILING DATE of this communication appears on the cover sheet with the correspondence address--

All claims being allowable, PROSECUTION ON THE MERITS IS (OR REMAINS) CLOSED in this application. If not included herewith (or previously mailed), a Notice of Allowance (PTOL-85) or other appropriate communication will be mailed in due course. **THIS NOTICE OF ALLOWABILITY IS NOT A GRANT OF PATENT RIGHTS.** This application is subject to withdrawal from issue at the initiative of the Office or upon petition by the applicant. See 37 CFR 1.313 and MPEP 1308.

1. ☑ This communication is responsive to 01/02/25.
   ☐ A declaration(s)/affidavit(s) under **37 CFR 1.130(b)** was/were filed on _____.

2. ☐ An election was made by the applicant in response to a restriction requirement set forth during the interview on _____; the restriction requirement and election have been incorporated into this action.

3. ☑ The allowed claim(s) is/are 23-26 . As a result of the allowed claim(s), you may be eligible to benefit from the **Patent Prosecution Highway** program at a participating intellectual property office for the corresponding application. For more information, please see **http://www.uspto.gov/patents/init_events/pph/index.jsp** or send an inquiry to **PPHfeedback@uspto.gov.**

4. ☐ Acknowledgment is made of a claim for foreign priority under 35 U.S.C. § 119(a)-(d) or (f).

   Certified copies:

   a) ☐ All b) ☐ Some* c) ☐ None of the:

   1. ☐ Certified copies of the priority documents have been received.
   2. ☐ Certified copies of the priority documents have been received in Application No. _____ .
   3. ☐ Copies of the certified copies of the priority documents have been received in this national stage application from the International Bureau (PCT Rule 17.2(a)).

   * Certified copies not received: _____ .

Applicant has THREE MONTHS FROM THE "MAILING DATE" of this communication to file a reply complying with the requirements noted below. Failure to timely comply will result in ABANDONMENT of this application.
THIS THREE-MONTH PERIOD IS NOT EXTENDABLE.

5. ☐ CORRECTED DRAWINGS (as "replacement sheets") must be submitted.
   ☐ including changes required by the attached Examiner's Amendment / Comment or in the Office action of Paper No./Mail Date _____ .

   Identifying indicia such as the application number (see 37 CFR 1.84(c)) should be written on the drawings in the front (not the back) of each sheet. Replacement sheet(s) should be labeled as such in the header according to 37 CFR 1.121(d).

6. ☐ DEPOSIT OF and/or INFORMATION about the deposit of BIOLOGICAL MATERIAL must be submitted. Note the attached Examiner's comment regarding REQUIREMENT FOR THE DEPOSIT OF BIOLOGICAL MATERIAL.

Attachment(s)

1. ☐ Notice of References Cited (PTO-892)
2. ☐ Information Disclosure Statements (PTO/SB/08), Paper No./Mail Date _____.
3. ☐ Examiner's Comment Regarding Requirement for Deposit of Biological Material _____.
4. ☐ Interview Summary (PTO-413), Paper No./Mail Date. _____.
5. ☐ Examiner's Amendment/Comment
6. ☐ Examiner's Statement of Reasons for Allowance
7. ☐ Other _____.

/ALISSA L HOEY/
Primary Examiner, Art Unit 3732

Index of Claims	Application/Control No.	Applicant(s)/Patent Under Reexamination
	17/856,628	Deshpande et al.
	Examiner	**Art Unit**
	ALISSA L HOEY	3732

✓	Rejected	-	Cancelled	N	Non-Elected	A	Appeal
=	Allowed	÷	Restricted	I	Interference	O	Objected

CLAIMS

☐ Claims renumbered in the same order as presented by applicant ☐ CPA ☐ T.D. ☐ R.1.47

CLAIM		DATE								
Final	Original	07/30/2024	01/27/2025							
	1	-	-							
	2	-	-							
	3	-	-							
	4	-	-							
	5	-	-							
	6	-	-							
	7	-	-							
	8	-	-							
	9	-	-							
	10	-	-							
	11	-	-							
	12	-	-							
	13	-	-							
	14	-	-							
	15	-	-							
	16	-	-							
	17	-	-							
	18	-	-							
	19	-	-							
	20	-	-							
	21	✓	-							
	22	✓	-							
1	23	✓	=							
2	24	✓	=							
3	25	✓	=							
4	26	✓	=							
	27	✓	-							
	28	✓	-							
	29	✓	-							
	30	✓	-							
	31	✓	-							
	32	✓	-							
	33	✓	-							
	34	✓	-							
	35	✓	-							
	36	N	-							
	37	N	-							
	38	N	-							
	39	N	-							

Search Notes	Application/Control No.	Applicant(s)/Patent Under Reexamination
	17/856,628	Deshpande et al.
	Examiner	**Art Unit**
	ALISSA L HOEY	3732

CPC - Searched*		
Symbol	**Date**	**Examiner**
A42B3/0446; A42B3/044; A42B3/0406; A42B3/042	07/30/2024	ALH
Updated search	01/27/2025	ALH

CPC Combination Sets - Searched*		
Symbol	**Date**	**Examiner**

US Classification - Searched*			
Class	**Subclass**	**Date**	**Examiner**

* See search history printout included with this form or the SEARCH NOTES box below to determine the scope of the search.

Search Notes		
Search Notes	**Date**	**Examiner**
AI Similarity Search	07/30/2024	ALH
PE2E Word Search, see for details	07/30/2024	ALH
PE2E Word Search, see for details	01/27/2025	ALH

Interference Search			
US Class/CPC Symbol	**US Subclass/CPC Group**	**Date**	**Examiner**
All	Interference Search History	01/27/2025	ALH

/ALISSA L HOEY/ Primary Examiner, Art Unit 3732	

Issue Classification	Application/Control No.	Applicant(s)/Patent Under Reexamination
	17/856,628	Deshpande et al.
	Examiner	**Art Unit**
	ALISSA L HOEY	3732

CPC						
Symbol					**Type**	**Version**
A42B	/	3	/	0446	F	2013-01-01

CPC Combination Sets								
Symbol					**Type**	**Set**	**Ranking**	**Version**
	/		/					

NONE (Assistant Examiner)	(Date)	**Total Claims Allowed:** 4	
/ALISSA L HOEY/ Primary Examiner, Art Unit 3732 (Primary Examiner)	27 January 2025 (Date)	O.G. Print Claim(s) 1	O.G. Print Figure 3

U.S. Patent and Trademark Office

Part of Paper No.: 20250127

Issue Classification	Application/Control No.	Applicant(s)/Patent Under Reexamination
	17/856,628	Deshpande et al.
	Examiner	**Art Unit**
	ALISSA L HOEY	3732

INTERNATIONAL CLASSIFICATION				
CLAIMED				
A42B3/04	/	3	/	04

NON-CLAIMED				
	/		/	

US ORIGINAL CLASSIFICATION	
CLASS	**SUBCLASS**

CROSS REFERENCES(S)						
CLASS	**SUBCLASS (ONE SUBCLASS PER BLOCK)**					

NONE (Assistant Examiner) (Date)		**Total Claims Allowed:** 4	
/ALISSA L HOEY/ Primary Examiner, Art Unit 3732 (Primary Examiner) (Date)	27 January 2025	O.G. Print Claim(s) 1	O.G. Print Figure 3

U.S. Patent and Trademark Office Part of Paper No.: 20250127

Issue Classification	Application/Control No.	Applicant(s)/Patent Under Reexamination
	17/856,628	Deshpande et al.
	Examiner	**Art Unit**
	ALISSA L HOEY	3732

☐ Claims renumbered in the same order as presented by applicant ☐ CPA ☑ T.D. ☐ R.1.47

CLAIMS

Final	Original	Final	Original	Final	Original	Final	Original	Final	Original	Final	Original	Final	Original	Final	Original
	1		10		19		28		37						
	2		11		20		29		38						
	3		12		21		30		39						
	4		13		22		31								
	5		14	1	23		32								
	6		15	2	24		33								
	7		16	3	25		34								
	8		17	4	26		35								
	9		18		27		36								

NONE (Assistant Examiner)	(Date)	**Total Claims Allowed:** 4	
/ALISSA L HOEY/ Primary Examiner, Art Unit 3732 (Primary Examiner)	27 January 2025 (Date)	O.G. Print Claim(s) 1	O.G. Print Figure 3

U.S. Patent and Trademark Office

Part of Paper No.: 20250127

Bibliographic Data

Application No: 17/856,628

Foreign Priority claimed: ○ Yes ◉ No

35 USC 119 (a-d) conditions met: ☐ Yes ☐ No ☐ Met After Allowance

Verified and Acknowledged: /ALISSA L HOEY/ (Examiner's Signature) [ ] (Initials)

Title: SAFETY HELMET

FILING or 371(c) DATE	CLASS	GROUP ART UNIT	ATTORNEY DOCKET NO.
07/01/2022	002	3732	763379
RULE			

APPLICANTS

Klein Tools, Inc., Lincolnshire, IL, UNITED STATES

INVENTORS

Shantanu Deshpande, Glenview, IL, UNITED STATES

Kingston Wong, Beach Park, IL, UNITED STATES

CONTINUING DATA

This application is a CON of 16246935 01/14/2019 PAT 11452327

16246935 has PRO of 62645491 03/20/2018

16246935 has PRO of 62622472 01/26/2018

FOREIGN APPLICATIONS

IF REQUIRED, FOREIGN LICENSE GRANTED**

07/12/2022

STATE OR COUNTRY

UNITED STATES

ADDRESS

Klein Tools, Inc
450 Bond Street
Lincolnshire, IL 60069
UNITED STATES

FILING FEE RECEIVED

$1,820

PE2E SEARCH - Search History (Prior Art)

Ref #	Hits	Search Query	DBs	Default Operator	Plurals	British Equivalents	Time Stamp
L1	5888	(A42B3/0446).cpc. OR (A42B3/044).cpc. OR (A42B3/0406).cpc. OR (A42B3/042).cpc.	(US-PGPUB; USPAT; USOCR; FPRS; EPO; JPO)	OR	ON	ON	2025/01/27 10:11 AM
L2	16123	(safety ADJ helmet)	(US-PGPUB; USPAT; USOCR; FPRS; EPO; JPO)	OR	ON	ON	2025/01/27 10:34 AM
L3	4494	L2 AND shell	(US-PGPUB; USPAT; USOCR; FPRS; EPO; JPO)	OR	ON	ON	2025/01/27 10:34 AM
L4	764	L3 AND molded	(US-PGPUB; USPAT; USOCR; FPRS; EPO; JPO)	OR	ON	ON	2025/01/27 10:34 AM
L5	258	L4 AND slot	(US-PGPUB; USPAT; USOCR; FPRS; EPO; JPO)	OR	ON	ON	2025/01/27 10:34 AM
L6	0	L4 AND recptacle	(US-PGPUB; USPAT; USOCR; FPRS; EPO; JPO)	OR	ON	ON	2025/01/27 10:36 AM
L7	61	L4 AND receptacle	(US-PGPUB; USPAT; USOCR; FPRS; EPO; JPO)	OR	ON	ON	2025/01/27 10:36 AM
L8	4823	(receptacle AND helmet)	(US-PGPUB; USPAT; USOCR; FPRS; EPO; JPO)	OR	ON	ON	2025/01/27 10:38 AM
L9	1500	L8 AND molded	(US-PGPUB; USPAT; USOCR; FPRS; EPO; JPO)	OR	ON	ON	2025/01/27 10:38 AM
L10	496	L9 AND accessory	(US-PGPUB; USPAT; USOCR; FPRS; EPO; JPO)	OR	ON	ON	2025/01/27 10:38 AM

PE2E SEARCH - Search History (Interference)

Ref #	Hits	Search Query	DBs	Default Operator	Plurals	British Equivalents	Time Stamp
N1	4551	(helmet AND receptacle)	(US-PGPUB; USPAT)	OR	ON	ON	2025/01/27 10:50 AM
N2	30	(helmet AND receptacle AND accessory).clm.	(US-PGPUB; USPAT)	OR	ON	ON	2025/01/27 10:50 AM
N3	27	(helmet AND receptacle AND molded).clm.	(US-PGPUB; USPAT)	OR	ON	ON	2025/01/27 10:51 AM
N4	27	(helmet AND accessory AND molded).clm.	(US-PGPUB; USPAT)	OR	ON	ON	2025/01/27 10:52 AM
N5	1358	(safety AND helmet).clm.	(US-PGPUB; USPAT)	OR	ON	ON	2025/01/27 10:53 AM
N6	76	(safety AND helmet	(US-PGPUB; USPAT)	OR	ON	ON	2025/01/27

		AND accessory).clm.					10:53 AM

PART B - FEE(S) TRANSMITTAL

Complete and send this form, together with applicable fee(s), by mail or fax, or via the USPTO patent electronic filing system.

By mail, send to: Mail Stop ISSUE FEE
Commissioner for Patents
P.O. Box 1450
Alexandria, Virginia 22313-1450

By fax, send to: (571)-273-2885

INSTRUCTIONS: This form should be used for transmitting the ISSUE FEE and PUBLICATION FEE (if required). Blocks 1 through 5 should be completed where appropriate. All further correspondence will be mailed to the current correspondence address as indicated unless corrected below or directed otherwise in Block 1, by (a) specifying a new correspondence address; and/or (b) indicating a separate "FEE ADDRESS" for maintenance fee notifications. **Because electronic patent issuance may occur shortly after issue fee payment, any desired continuing application should preferably be filed prior to payment of this issue fee in order not to jeopardize copendency.**

CURRENT CORRESPONDENCE ADDRESS (Note: Use Block 1 for any change of address)

144588 7590 02/18/2025
Klein Tools, Inc
450 Bond Street
Lincolnshire, IL 60069

Note: A certificate of mailing can only be used for domestic mailings of the Fee(s) Transmittal. This certificate cannot be used for any other accompanying papers. Each additional paper, such as an assignment or formal drawing, must have its own certificate of mailing or transmission.

Certificate of Mailing or Transmission

I hereby certify that this Fee(s) Transmittal is being deposited with the United States Postal Service with sufficient postage for first class mail in an envelope addressed to the Mail Stop ISSUE FEE address above, or being transmitted to the USPTO via the USPTO patent electronic filing system or by facsimile to (571) 273-2885, on the date below.

(Typed or printed name)
(Signature)
(Date)

APPLICATION NO.	FILING DATE	FIRST NAMED INVENTOR	ATTORNEY DOCKET NO.	CONFIRMATION NO.
17/856,628	07/01/2022	Shantanu Deshpande	763379	4418

TITLE OF INVENTION: SAFETY HELMET

APPLN. TYPE	ENTITY STATUS	ISSUE FEE DUE	PUBLICATION FEE DUE	PREV. PAID ISSUE FEE	TOTAL FEE(S) DUE	DATE DUE
nonprovisional	UNDISCOUNTED	$1290	$0.00	$0.00	$1290	05/19/2025

EXAMINER	ART UNIT	CLASS-SUBCLASS
HOEY, ALISSA L	3732	002-422000

1. Change of correspondence address or indication of "Fee Address" (37 CFR 1.363).

❑ Change of correspondence address (or Change of Correspondence Address form PTO/AIA/122 or PTO/SB/122) attached.

❑ "Fee Address" indication (or "Fee Address" Indication form PTO/AIA/47 or PTO/SB/47; Rev 03-02 or more recent) attached. **Use of a Customer Number is required.**

2. For printing on the patent front page, list
(1) The names of up to 3 registered patent attorneys or agents OR, alternatively,
(2) The name of a single firm (having as a member a registered attorney or agent) and the names of up to 2 registered patent attorneys or agents. If no name is listed, no name will be printed.

1_____
2_____
3_____

3. ASSIGNEE NAME AND RESIDENCE DATA TO BE PRINTED ON THE PATENT (print or type)

PLEASE NOTE: Unless an assignee is identified below, no assignee data will appear on the patent. If an assignee is identified below, the document must have been previously recorded, or filed for recordation, as set forth in 37 CFR 3.11 and 37 CFR 3.81(a). Completion of this form is NOT a substitute for filing an assignment.

(A) NAME OF ASSIGNEE: Klein Tools, Inc.

(B) RESIDENCE: (CITY and STATE OR COUNTRY): Lincolnshire, IL

Please check the appropriate assignee category or categories (will not be printed on the patent) : ❑ Individual ❑ Corporation or other private group entity ❑ Government

4a. Fees submitted: ☒ Issue Fee ❑ Publication Fee (if required)

4b. Method of Payment: *(Please first reapply any previously paid fee shown above)*

☒ Electronic Payment via the USPTO patent electronic filing system ❑ Enclosed check ❑ Non-electronic payment by credit card (Attach form PTO-2038)

❑ The Director is hereby authorized to charge the required fee(s), any deficiency, or credit any overpayment to Deposit Account No. _____

5. **Change in Entity Status** (from status indicated above)

❑ Applicant certifying micro entity status. See 37 CFR 1.29

NOTE: Absent a valid certification of Micro Entity Status (see forms PTO/SB/15A and 15B), issue fee payment in the micro entity amount will not be accepted at the risk of application abandonment.

❑ Applicant asserting small entity status. See 37 CFR 1.27

NOTE: If the application was previously under micro entity status, checking this box will be taken to be a notification of loss of entitlement to micro entity status.

❑ Applicant changing to regular undiscounted fee status.

NOTE: Checking this box will be taken to be a notification of loss of entitlement to small or micro entity status, as applicable.

NOTE: This form must be signed in accordance with 37 CFR 1.31 and 1.33. See 37 CFR 1.4 for signature requirements and certifications.

Authorized Signature /John Whelan/ Date 3/10/2025

Typed or printed name John Whelan Registration No. 76200

UNITED STATES
PATENT AND TRADEMARK OFFICE

P.O. Box 1450
Alexandria, VA 22313 - 1450
www.uspto.gov

ELECTRONIC PAYMENT RECEIPT

APPLICATION #	RECEIPT DATE / TIME	ATTORNEY DOCKET #
17/856,628	**03/10/2025 02:26:26 PM Z ET**	**763379**

Title of Invention

SAFETY HELMET

Application Information

APPLICATION TYPE	Utility - Nonprovisional Application under 35 USC 111(a)	PATENT #	-
CONFIRMATION #	4418	FILED BY	John Whelan
PATENT CENTER #	69512405	AUTHORIZED BY	-
CUSTOMER #	144588	FILING DATE	07/01/2022
CORRESPONDENCE ADDRESS	-	FIRST NAMED INVENTOR	Shantanu Deshpande

Payment Information

PAYMENT METHOD	PAYMENT TRANSACTION ID	PAYMENT AUTHORIZED BY
DA / 602056	**E202530E26437162**	**John Whelan**

FEE CODE	DESCRIPTION	ITEM PRICE($)	QUANTITY	ITEM TOTAL($)
1501	UTILITY ISSUE FEE	1290.00	1	1290.00
			TOTAL AMOUNT:	**$1,290.00**

This Acknowledgement Receipt evidences receipt on the noted date by the USPTO of the indicated documents, characterized by the applicant, and including page counts, where applicable. It serves as evidence of receipt similar to a Post Card, as described in MPEP 503.

New Applications Under 35 U.S.C. 111

If a new application is being filed and the application includes the necessary components for filing date (see 37 CFR 1.53(b)-(d) and MPEP 506), a Filing Receipt (37 CFR 1.54) will be issued in due course and the date shown on this Acknowledgement Receipt will establish the filing date of the application

National Stage of an International Application under 35 U.S.C. 371

If a timely submission to enter the national stage of an international application is compliant with the conditions of 35 U.S.C. 371 and other applicable requirements a Form PCT/DO/EO/903 indicating acceptance of the application as a national stage submission under 35 U.S.C. 371 will be issued in addition to the Filing Receipt, in due course.

New International Application Filed with the USPTO as a Receiving Office

If a new international application is being filed and the international application includes the necessary components for an international filing date (see PCT Article 11 and MPEP 1810), a Notification of the International Application Number and of the International Filing Date (Form PCT/RO/105) will be issued in due course, subject to prescriptions concerning national security, and the date shown on this Acknowledgement Receipt will establish the international filing date of the application.

UNITED STATES
PATENT AND TRADEMARK OFFICE

P.O. Box 1450
Alexandria, VA 22313 - 1450
www.uspto.gov

ELECTRONIC ACKNOWLEDGEMENT RECEIPT

APPLICATION #	RECEIPT DATE / TIME	ATTORNEY DOCKET #
17/856,628	**03/10/2025 02:26:26 PM Z ET**	**763379**

Title of Invention

SAFETY HELMET

Application Information

APPLICATION TYPE	Utility - Nonprovisional Application under 35 USC 111(a)	PATENT #	-
CONFIRMATION #	4418	FILED BY	John Whelan
PATENT CENTER #	69512405	FILING DATE	07/01/2022
CUSTOMER #	144588	FIRST NAMED INVENTOR	Shantanu Deshpande
CORRESPONDENCE ADDRESS	-	AUTHORIZED BY	-

Documents

TOTAL DOCUMENTS: 1

DOCUMENT	PAGES	DESCRIPTION	SIZE (KB)
PTOL85B.pdf	1	Issue Fee Payment (PTO-85B)	183 KB

Digest

DOCUMENT	MESSAGE DIGEST(SHA-512)
PTOL85B.pdf	006C4E6001791AE3215B9EB51C974D5E093BEE26CB3286A416F03ECB45912999BA922C0C97C8B8C669EA9A70AA0954A0DD0D14E99D337F50A40EF2E3DDACC7C6

This Acknowledgement Receipt evidences receipt on the noted date by the USPTO of the indicated documents, characterized by the applicant, and including page counts, where applicable. It serves as evidence of receipt similar to a Post Card, as described in MPEP 503.

New Applications Under 35 U.S.C. 111

If a new application is being filed and the application includes the necessary components for filing date (see 37 CFR 1.53(b)-(d) and MPEP 506), a Filing Receipt (37 CFR 1.54) will be issued in due course and the date shown on this Acknowledgement Receipt will establish the filing date of the application

National Stage of an International Application under 35 U.S.C. 371

If a timely submission to enter the national stage of an international application is compliant with the conditions of 35 U.S.C. 371 and other applicable requirements a Form PCT/DO/EO/903 indicating acceptance of the application as a national stage submission under 35 U.S.C. 371 will be issued in addition to the Filing Receipt, in due course.

New International Application Filed with the USPTO as a Receiving Office

If a new international application is being filed and the international application includes the necessary components for an international filing date (see PCT Article 11 and MPEP 1810), a Notification of the International Application Number and of the International Filing Date (Form PCT/RO/105) will be issued in due course, subject to prescriptions concerning national security, and the date shown on this Acknowledgement Receipt will establish the international filing date of the application.

Substitute for Form 1449A/B/PTO **INFORMATION DISCLOSURE STATEMENT BY APPLICANT**				Patent Application No.	17/856,628
				Confirmation No.	4418
Sheet	1	of	2	Attorney Docket No.	763379

U.S. PATENT DOCUMENTS

Examiner Initials	Doc. No.	U.S. Patent Document: Application or Patent Number	U.S. Patent Document: Kind Code	Name of Patentee or Applicant	Date of Publication	Filing Date If Appropriate
	AA	1,947,786	A	Lueck et al..	02-20-1934	
	AB	4,521,831	A	Thayer	06-04-1985	
	AC	5,026,016	A	Lisowski	06-25-1991	
	AD	5,688,039	A	Johnson	11-18-1997	
	AE	6,497,493	B1	Theisen	12-24-2002	
	AF	6,532,601	B1	Berman	03-18-2003	
	AG	6,616,294	B1	Henry	09-09-2003	
	AH	6,701,649	B1	Brosi	03-09-2004	
	AI	6,811,348	B1	Meyer et al.	11-02-2004	
	AJ	8,060,951	B2	Smith	11-22-2011	
	AK	9,702,534	B1	Brion	07-11-2017	
	AL	9,814,622	B2	Somners	11-14-2017	
	AM	9,872,531	B2	Uke et al.	01-23-2018	
	AN	10,743,599	B2	Silva et al.	08-18-2020	
	AO	10,886,646	B2	Goupil et al.	01-05-2021	
	AP	11,019,870	B2	Hyma	06-01-2021	
	AQ	2002/0116749	A1	Bielefeld et al.	08-26-2002	
	AR	2008/0263752	A1	Solinsky et al.	10-30-2008	
	AS	2010/0083413	A1	Mcgovern	04-08-2010	
	AT	2011/0072562	A1	Prendergast	03-31-2011	
	AU	2012/0224356	A1	Fischer et al.	09-06-2012	
	AV	2012/0317706	A1	Lebel et al.	~~04-25-2017~~	12/2012
	AW	2012/0320569	A1	Lu	12-20-2012	
	AX	2013/0086722	A1	Teetzel et al.	~~12-09-2014~~	04/2013
	AY	2014/0000013	A1	Redpath et al.	01-02-2014	
	AZ	2014/0000014	A1	Redpath et al.	01-02-2014	
	BA	2014/0020159	A1	Teetzel et al.	01-23-2014	
	BB	2016/0242483	A1	Dorsey et al.	08-25-2016	
	BC	2016/0249700	A1	Zhavoronkov	09-01-2016	
	BD	2017/0238642	A1	Tatum	08-24-2017	
	BE	2018/0128459	A1	Carroll	05-10-2018	
	BF	2018/0192727	A1	Chen	07-12-2018	
	BG	2018/0249779	A1	DeLima et al.	09-06-2018	
	BH	2019/0008228	A1	Ramey	01-10-2019	
	BI	2019/0098952	A1	Teetzel et al.	04-04-2019	
	BJ	2019/0101359	A1	Zimmer	04-04-2019	
	BK	2019/0104797	A1	Teetzel et al.	04-11-2019	
	BL	2019/0107247	A1	Teetzel et al.	04-11-2019	
	BM	2019/0350291	A1	Maldonado et al.	11-21-2019	
	BN	2019/0350292	A1	Maldonado et al.	~~05-12-2020~~	11/2019
	BO	2020/0170329	A1	Bohn et al.	~~02-09-2021~~	06/2020
	BP	2020/0268088	A1	Sanchez	~~08-14-2022~~	08/2020
	BQ	2020/0329806	A1	Wong	10-22-2020	

Change(s) applied to document, /K.P./ 2/25/2025

Examiner Signature	/ALISSA L HOEY/	Date Considered	07/29/2024

* If the reference is not in English, then at least one of the following is provided: (a) an English translation in whole or in part or (b) a concise statement of relevance in the form of, for example, an English language counterpart, an English-language abstract, or an English-language version of the search report or action by a foreign patent office in a counterpart foreign application indicating the degree of relevance found by the foreign office.

ALL REFERENCES CONSIDERED EXCEPT WHERE LINED THROUGH. /A.L.H/

UNITED STATES PATENT AND TRADEMARK OFFICE

UNITED STATES DEPARTMENT OF COMMERCE
United States Patent and Trademark Office
Address: COMMISSIONER FOR PATENTS
P.O. Box 1450
Alexandria, Virginia 22313-1450
www.uspto.gov

APPLICATION NO.	ISSUE DATE	PATENT NO.	ATTORNEY DOCKET NO.	CONFIRMATION NO.
17/856,628	04/08/2025	12268265	763379	4418

144588 7590 03/19/2025

Klein Tools, Inc
450 Bond Street
Lincolnshire, IL 60069

ISSUE NOTIFICATION

The projected patent number and issue date are specified above. The patent will issue electronically. The electronically issued patent is the official patent grant pursuant to 35 U.S.C. § 153. The patent may be accessed on or after the issue date through Patent Center at https://patentcenter.uspto.gov/. The patent will be available in both the public and the private sides of Patent Center. Further assistance in electronically accessing the patent, or about Patent Center, is available by calling the Patent Electronic Business Center at 1-888-217-9197.

The USPTO is implementing electronic patent issuance with a transition period, during which period the USPTO will mail a ceremonial paper copy of the electronic patent grant to the correspondence address of record. Additional copies of the patent (i.e., certified and presentation copies) may be ordered for a fee from the USPTO's Certified Copy Center at https://certifiedcopycenter.uspto.gov/index.html. The Certified Copy Center may be reached at (800)972-6382.

Determination of Patent Term Adjustment under 35 U.S.C. 154 (b)
(application filed on or after May 29, 2000)

The Patent Term Adjustment is 109 day(s). Any patent to issue from the above-identified application will include an indication of the adjustment on the front page.

If a Continued Prosecution Application (CPA) was filed in the above-identified application, the filing date that determines Patent Term Adjustment is the filing date of the most recent CPA.

Applicant will be able to obtain more detailed information by accessing the Patent Center (https://patentcenter.uspto.gov).

Any questions regarding the Patent Term Extension or Adjustment determination should be directed to the Office of Patent Legal Administration at (571)-272-7702. Questions relating to issue and publication fee payments should be directed to the Application Assistance Unit (AAU) of the Office of Patents Stakeholder Experience (OPSE), Stakeholder Support Division (SSD) at (571)-272-4200.

INVENTOR(s) (Please see PATENT CENTER site https://patentcenter.uspto.gov for additional inventors):

Shantanu Deshpande, Glenview, IL;
Kingston Wong, Beach Park, IL;

APPLICANT(s) (Please see PATENT CENTER site https://patentcenter.uspto.gov for additional applicants):

Klein Tools, Inc., Lincolnshire, IL;

The United States represents the largest, most dynamic marketplace in the world and is an unparalleled location for business investment, innovation, and commercialization of new technologies. The USA offers tremendous resources and advantages for those who invest and manufacture goods here. Through SelectUSA, our nation works to encourage and facilitate business investment. To learn more about why the USA is the best country in the world to develop technology, manufacture products, and grow your business, visit SelectUSA.gov.

UNITED STATES PATENT AND TRADEMARK OFFICE

UNITED STATES DEPARTMENT OF COMMERCE
United States Patent and Trademark Office
Address: COMMISSIONER FOR PATENTS
P.O. Box 1450
Alexandria, Virginia 22313-1450
www.uspto.gov

APPLICATION NO.	FILING DATE	FIRST NAMED INVENTOR	ATTORNEY DOCKET NO.	CONFIRMATION NO.
17/856,628	07/01/2022	Shantanu Deshpande	763379	4418

144588 7590 04/08/2025
Klein Tools, Inc
450 Bond Street
Lincolnshire, IL 60069

EXAMINER
HOEY, ALISSA L

ART UNIT	PAPER NUMBER
3732	

MAIL DATE	DELIVERY MODE
04/08/2025	PAPER

Please find below and/or attached an Office communication concerning this application or proceeding.

The time period for reply, if any, is set in the attached communication.

PTOL-90A (Rev. 04/07)

APPLICATION NO.	ISSUE DATE	PATENT NO.
17/856,628	08-Apr-2025	12268265

Klein Tools, Inc
450 Bond Street
Lincolnshire, IL 60069

EGRANT NOTIFICATION

Your electronic patent grant (eGrant) is now available, which can be accessed via Patent Center at https://patentcenter.uspto.gov

The electronic patent grant is the official patent grant under 35 U.S.C. 153. For more information, please visit https://www.uspto.gov/electronicgrants