US009666817B2

(12) **United States Patent**
Kim et al.

(10) **Patent No.: US 9,666,817 B2**
(45) **Date of Patent: May 30, 2017**

(54) **ORGANIC PHOTODETECTOR AND IMAGE SENSOR**

(71) Applicant: **Samsung Electronics Co., Ltd.**, Suwon-si, Gyeonggi-do (KR)

(72) Inventors: **Kyusik Kim**, Yongsin-si (KR); **Jang-Joo Kim**, Seoul (KR); **Dae-Ho Kim**, Seoul (KR)

(73) Assignees: **Samsung Electronics Co., Ltd.**, Gyeonggi-do (KR); **Seoul National University R&DB Foundation**, Seoul (KR)

(*) Notice: Subject to any disclaimer, the term of this patent is extended or adjusted under 35 U.S.C. 154(b) by 0 days.

(21) Appl. No.: **14/995,318**

(22) Filed: **Jan. 14, 2016**

(65) **Prior Publication Data**

US 2017/0033303 A1 Feb. 2, 2017

(30) **Foreign Application Priority Data**

Jul. 31, 2015 (KR) 10-2015-0108694

(51) **Int. Cl.**

H01L 27/146	(2006.01)
H01L 51/42	(2006.01)
H01L 51/44	(2006.01)
H01L 27/30	(2006.01)
H01L 51/00	(2006.01)

(52) **U.S. Cl.**
CPC ***H01L 51/424*** (2013.01); ***H01L 27/307*** (2013.01); ***H01L 51/442*** (2013.01); *H01L 51/0046* (2013.01)

(58) **Field of Classification Search**
CPC H01L 25/167; H01L 27/14643; H01L 27/307; H01L 27/3227; H01L 31/02024
See application file for complete search history.

(56) **References Cited**

U.S. PATENT DOCUMENTS

6,972,431 B2	12/2005	Forrest et al.	
2010/0207112 A1	8/2010	Furst et al.	
2013/0247992 A1*	9/2013	Drees	H01L 51/0043 136/263

(Continued)

FOREIGN PATENT DOCUMENTS

KR 20140044848 A 4/2014

OTHER PUBLICATIONS

Sebastian Valouch et al. "Solution processed small molecule organic interfacial layers for low dark current polymer photodiodes", Organic Electronics. 2012. pp. 2727-2732. Elsevier B.V.

(Continued)

Primary Examiner — Hoai V Pham
(74) *Attorney, Agent, or Firm* — Harness, Dickey & Pierce, P.L.C.

(57) **ABSTRACT**

An organic photodetector includes an anode and a cathode facing each other and an active layer between the anode and the cathode and including a p-type semiconductor and an n-type semiconductor, wherein an energy barrier between the anode or the cathode and the active layer is greater than or equal to about 1.3 eV, a difference between a HOMO energy level of the p-type semiconductor and a LUMO energy level of the n-type semiconductor is greater than or equal to about 0.8 eV.

16 Claims, 7 Drawing Sheets

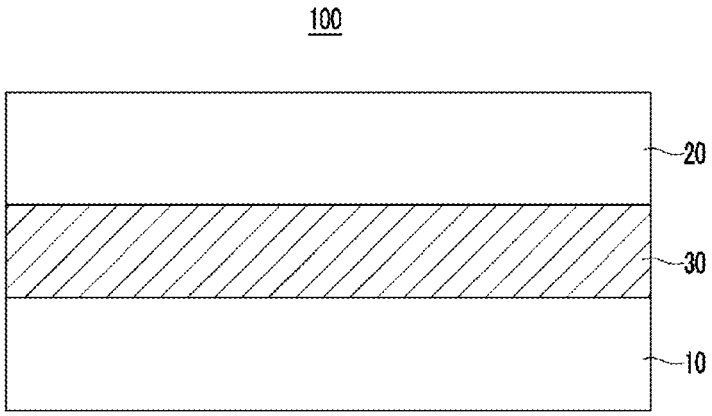

(56) **References Cited**

U.S. PATENT DOCUMENTS

2014/0110696	A1	4/2014	Benwadih
2015/0060775	A1	3/2015	Liang et al.

OTHER PUBLICATIONS

Panagiotis E. Keivanidis et al. "All-solution based device engineering of multilayer polymeric photodiodes: Minimizing dark current". Applied Physics Letters. Apr. 2009. pp. 1-3. American Institute of Physics.

Taichiro Morimune et al. "Photoresponse Properties of a High-Speed Organic Photodetector Based on a Copper-Phthalocyanine Under Red Light Illumination". IEEE Photonics Technology Letters, vol. 18, No. 24. Dec. 2006. pp. 2662-2664.

Maddalena Binda et al. "High detectivity squaraine-based near infrared photodetector with nA/cm(2) dark current". Applied Physics Letters. Feb. 2011. pp. 1-3. American Institute of Physics.

* cited by examiner

FIG. 1

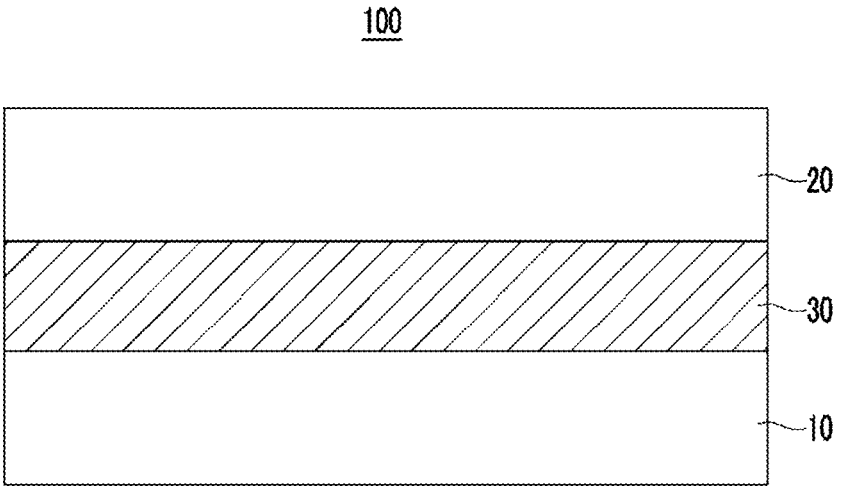

FIG. 2

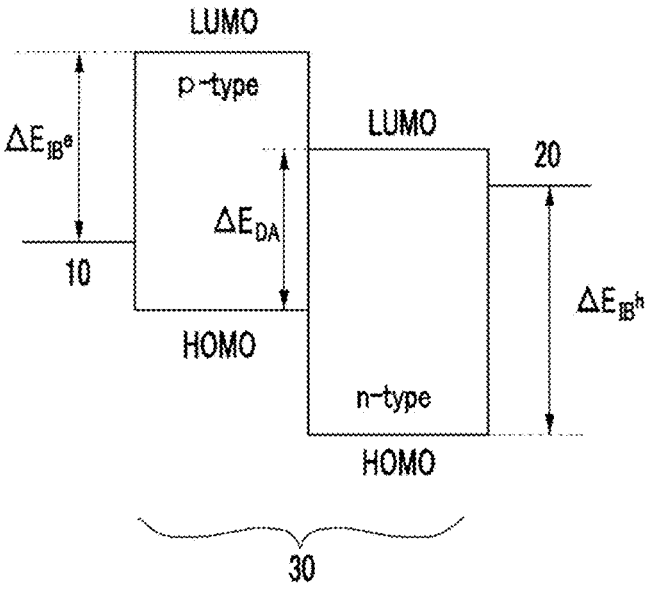
LUMO
p-type
ΔE_{IB^e}
10
ΔE_{DA}
HOMO
LUMO
20
ΔE_{IB^h}
n-type
HOMO
30

FIG. 3

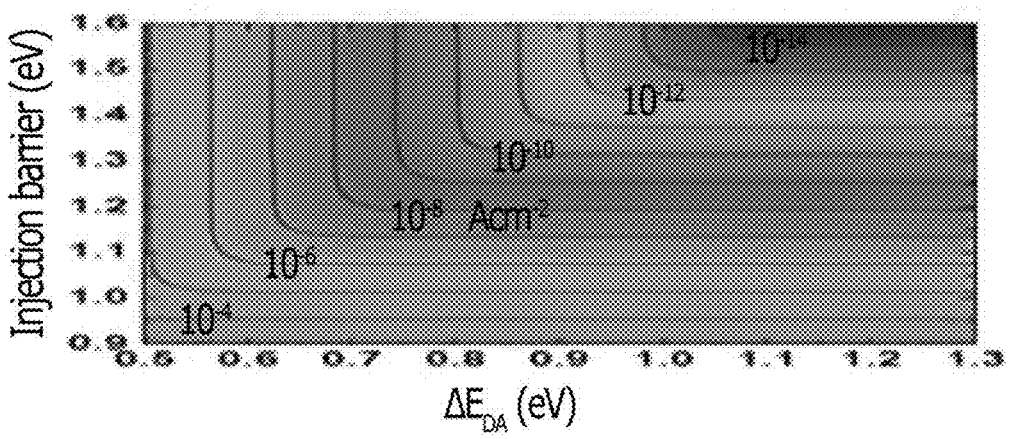
Injection barrier (eV)
1.6
1.5
1.4
1.3
1.2
1.1
1.0
0.9
0.5
0.6
0.7
0.8
0.9
1.0
1.1
1.2
1.3
ΔE_DA (eV)
10^-14
10^-12
10^-10
10^-8 Acm^-2
10^-6
10^-4

FIG. 4

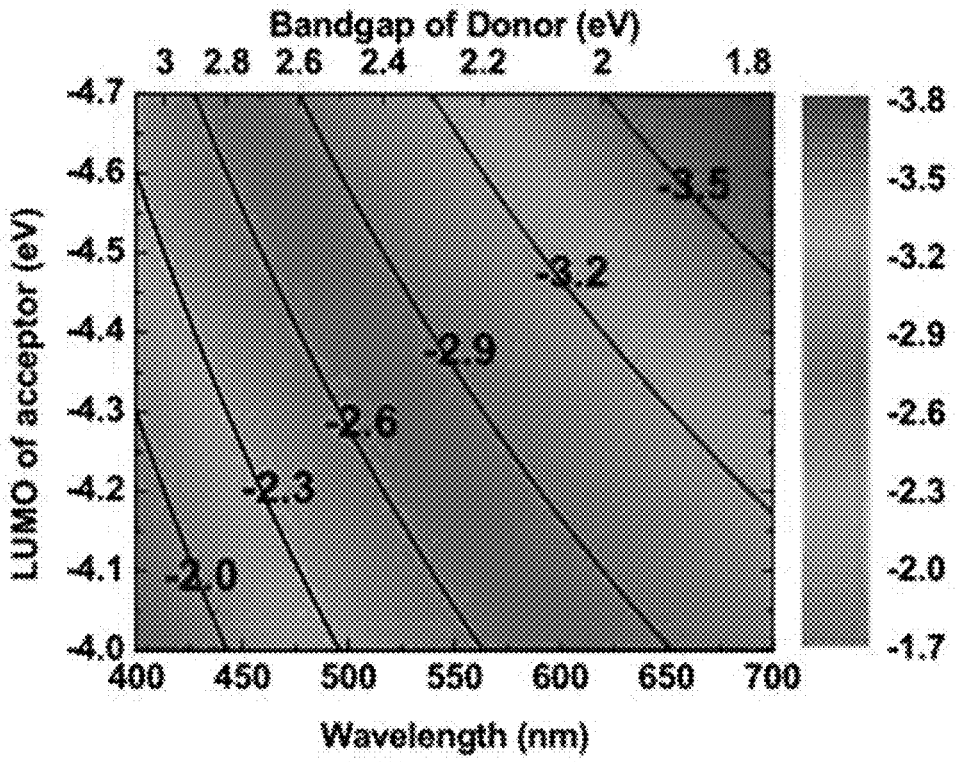
Bandgap of Donor (eV)
3
2.8
2.6
2.4
2.2
2
1.8
LUMO of acceptor (eV)
-4.7
-4.6
-4.5
-4.4
-4.3
-4.2
-4.1
-4.0
400
450
500
550
600
650
700
Wavelength (nm)
-3.5
-3.2
-2.9
-2.6
-2.3
-2.0
-3.8
-3.5
-3.2
-2.9
-2.6
-2.3
-2.0
-1.7

FIG. 5

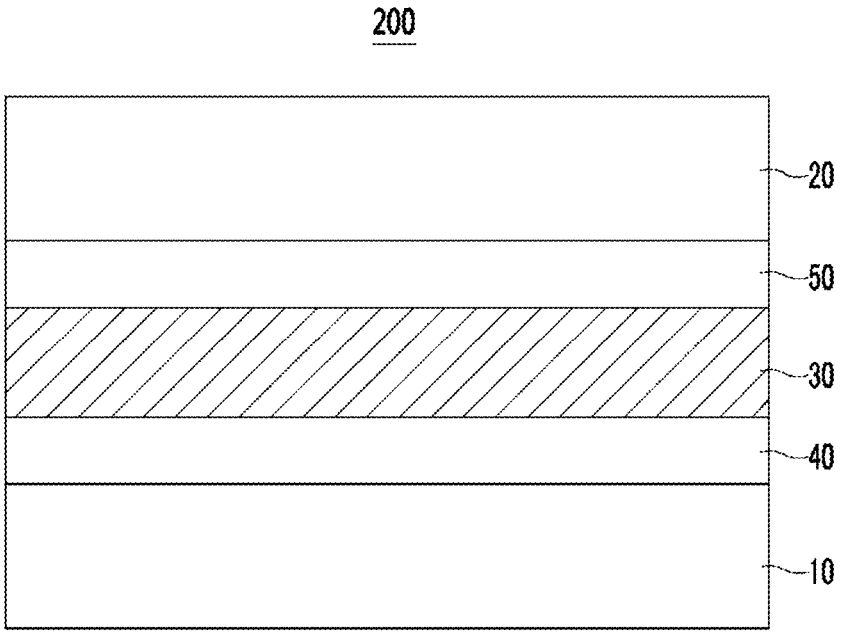

FIG. 6

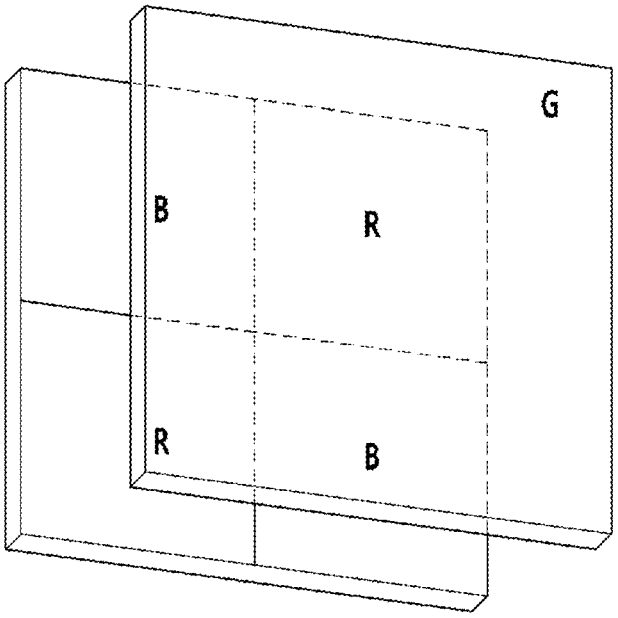

FIG. 7

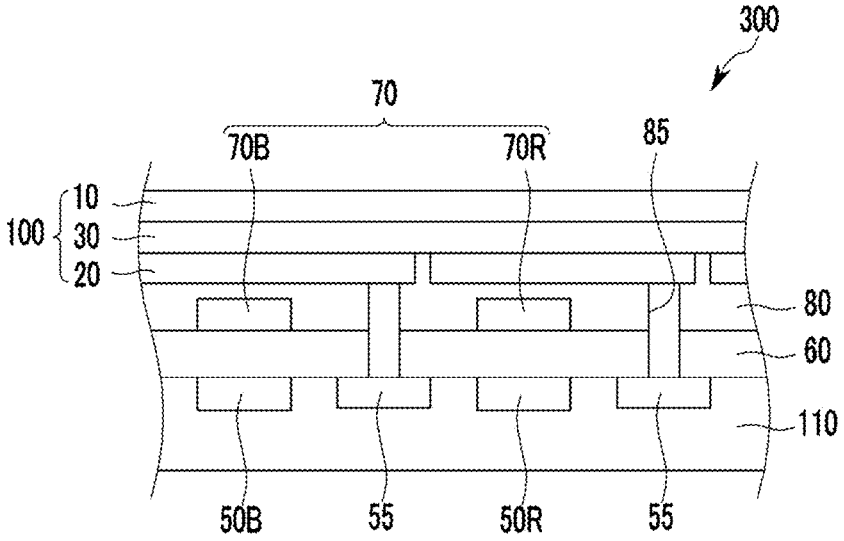

ORGANIC PHOTODETECTOR AND IMAGE SENSOR

CROSS REFERENCE TO RELATED APPLICATIONS

This application claims priority to and the benefit of Korean Patent Application No. 10-2015-0108694 filed in the Korean Intellectual Property Office on Jul. 31, 2015, the entire contents of which are incorporated herein by reference.

BACKGROUND

1. Field

Example embodiments provide an organic photodetector and/or an image sensor including the same.

2. Description of the Related Art

A photodetector typically converts light into an electrical signal, and may include a photodiode, a phototransistor, etc. The photodetector may be applied to an image sensor, a solar cell, etc.

An image sensor including a photodiode requires typically high resolution, and thus, a relatively small pixel. At present, a silicon photodiode is widely used, but exhibits deteriorated sensitivity because of a relatively small absorption area due to the relatively small pixels. Accordingly, an organic material that is capable of replacing silicon has been researched.

The organic material has a relatively high extinction coefficient and selectively absorbs light in a particular wavelength region depending on a molecular structure, and thus may simultaneously replace a photodiode and a color filter, thereby improving sensitivity and contributing to relatively high integration.

SUMMARY

Example embodiments provide an organic photodetector capable of improving the sensitivity by decreasing the dark current density.

Example embodiments also provide an image sensor including the organic photodetector.

According to example embodiments, an organic photodetector includes an anode and a cathode facing each other, and an active layer between the anode and the cathode, the active layer including a p-type semiconductor and an n-type semiconductor, wherein a difference between a highest occupied molecular orbital (HOMO) energy level of the p-type semiconductor and a lowest occupied molecular orbital (LUMO) energy level of the n-type semiconductor is greater than or equal to about 0.8 eV, and wherein an energy barrier between the active layer and one of the anode and the cathode is greater than or equal to about 1.3 eV.

The energy barrier between the active layer and one of the anode and the cathode may be one of an energy difference between a work function of the anode and a LUMO energy level of the p-type semiconductor and an energy difference between a work function of the cathode and a HOMO energy level of the n-type semiconductor.

The organic photodetector may have a dark current density of less than or equal to about 10^{-10} A/cm^2 at a reverse bias of about −3 V.

The energy barrier of the active layer and one of the anode and the cathode may be greater than or equal to about 1.5 eV, and the difference between the HOMO energy level of the p-type semiconductor and the LUMO energy level of the n-type semiconductor may be greater than or equal to about 1.0 eV.

The organic photodetector may have a dark current density of less than or equal to about 10^{-12} A/cm^2 at a reverse bias of about −3 V.

The active layer may include a p-type layer closest to the anode and including a p-type semiconductor, and an n-type layer closest to the cathode and including an n-type semiconductor.

The organic photodetector may not include a charge blocking layer between the anode and the active layer or between the cathode and the active layer.

At least one of the p-type semiconductor and the n-type semiconductor may selectively absorb a part of a visible ray wavelength region.

At least one of the p-type semiconductor and the n-type semiconductor may selectively absorb a green wavelength region.

The anode may be indium tin oxide (ITO), the LUMO energy level of the n-type semiconductor may be about −4.1 eV, and the p-type semiconductor may be a material having a LUMO energy level of about −2.6 to about −3.5 eV and a HOMO energy level of about −4.9 to about −5.8 eV.

An electron blocking layer may not be between the anode and the active layer.

The anode may be ITO, the n-type semiconductor may be C_{60}, and the p-type semiconductor may be a material having a HOMO energy level of about −5.3 to about −5.8 eV.

An electron blocking layer may not be between the anode and the active layer.

The anode and the cathode may be light-transmitting electrodes.

According to example embodiments, an image sensor includes the organic photodetector of example embodiments.

According to example embodiments, an electronic device includes the image sensor of example embodiments.

BRIEF DESCRIPTION OF THE DRAWINGS

FIG. **1** is a cross-sectional view showing an organic photodetector according to example embodiments,

FIG. **2** is a diagram showing an energy level relationship between an electrode and an active layer at an organic photodetector according to example embodiments,

FIG. **3** is a graph showing a dark current density depending upon the difference of the energy barrier and the energy level when applying a reverse bias of −3 V to an organic photodetector according to example embodiments,

FIG. **4** is a graph showing a relationship between an absorption wavelength of an organic photodetector according to example embodiments and an energy level of a p-type semiconductor and an n-type semiconductor,

FIG. **5** is a cross-sectional view showing an organic photodetector according to example embodiments,

FIG. **6** is a top plan view of an organic CMOS image sensor according to example embodiments, and

FIG. **7** is a cross-sectional view of the organic CMOS image sensor of FIG. **6**.

DETAILED DESCRIPTION

Example embodiments of the present inventive concepts will hereinafter be described in detail, and may be more easily performed by those who have common knowledge in the related art. However, this disclosure may be embodied in

many different forms and is not construed as limited to the example embodiments set forth herein.

In the drawings, the thickness of layers, films, panels, regions, etc., are exaggerated for clarity. Like reference numerals designate like elements throughout the specification. It will be understood that when an element such as a layer, film, region, or substrate is referred to as being "on" another element, it can be directly on the other element or intervening elements may also be present. In contrast, when an element is referred to as being "directly on" another element, there are no intervening elements present.

In the drawings, parts having no relationship with the description are omitted for clarity of the embodiments, and the same or similar constituent elements are indicated by the same reference numerals throughout the specification.

It will be understood that when an element is referred to as being "on," "connected" or "coupled" to another element, it can be directly on, connected or coupled to the other element or intervening elements may be present. In contrast, when an element is referred to as being "directly on," "directly connected" or "directly coupled" to another element, there are no intervening elements present. As used herein the term "and/or" includes any and all combinations of one or more of the associated listed items. Further, it will be understood that when a layer is referred to as being "under" another layer, it can be directly under or one or more intervening layers may also be present. In addition, it will also be understood that when a layer is referred to as being "between" two layers, it can be the only layer between the two layers, or one or more intervening layers may also be present.

It will be understood that, although the terms "first", "second", etc. may be used herein to describe various elements, components, regions, layers and/or sections, these elements, components, regions, layers and/or sections should not be limited by these terms. These terms are only used to distinguish one element, component, region, layer or section from another element, component, region, layer or section. Thus, a first element, component, region, layer or section discussed below could be termed a second element, component, region, layer or section without departing from the teachings of example embodiments.

Spatially relative terms, such as "beneath," "below," "lower," "above," "upper" and the like, may be used herein for ease of description to describe one element or feature's relationship to another element(s) or feature(s) as illustrated in the figures. It will be understood that the spatially relative terms are intended to encompass different orientations of the device in use or operation in addition to the orientation depicted in the figures. For example, if the device in the figures is turned over, elements described as "below" or "beneath" other elements or features would then be oriented "above" the other elements or features. Thus, the example term "below" can encompass both an orientation of above and below. The device may be otherwise oriented (rotated **90** degrees or at other orientations) and the spatially relative descriptors used herein interpreted accordingly.

The terminology used herein is for the purpose of describing particular embodiments only and is not intended to be limiting of example embodiments. As used herein, the singular forms "a," "an" and "the" are intended to include the plural forms as well, unless the context clearly indicates otherwise. It will be further understood that the terms "comprises" and/or "comprising," when used in this specification, specify the presence of stated features, integers, steps, operations, elements, and/or components, but do not preclude the presence or addition of one or more other features, integers, steps, operations, elements, components, and/or groups thereof.

Example embodiments are described herein with reference to cross-sectional illustrations that are schematic illustrations of idealized embodiments (and intermediate structures) of example embodiments. As such, variations from the shapes of the illustrations as a result, for example, of manufacturing techniques and/or tolerances, are to be expected. Thus, example embodiments should not be construed as limited to the particular shapes of regions illustrated herein but are to include deviations in shapes that result, for example, from manufacturing. For example, an implanted region illustrated as a rectangle will, typically, have rounded or curved features and/or a gradient of implant concentration at its edges rather than a binary change from implanted to non-implanted region. Likewise, a buried region formed by implantation may result in some implantation in the region between the buried region and the surface through which the implantation takes place. Thus, the regions illustrated in the figures are schematic in nature and their shapes are not intended to illustrate the actual shape of a region of a device and are not intended to limit the scope of example embodiments.

Unless otherwise defined, all terms (including technical and scientific terms) used herein have the same meaning as commonly understood by one of ordinary skill in the art to which example embodiments belong. It will be further understood that terms, such as those defined in commonly-used dictionaries, should be interpreted as having a meaning that is consistent with their meaning in the context of the relevant art and will not be interpreted in an idealized or overly formal sense unless expressly so defined herein. As used herein, expressions such as "at least one of," when preceding a list of elements, modify the entire list of elements and do not modify the individual elements of the list.

Hereinafter, referring to drawings, an organic photodetector according to example embodiments is described.

FIG. **1** is a cross-sectional view showing an organic photodetector according to example embodiments.

Referring to FIG. **1**, an organic photodetector **100** according to example embodiments includes an anode **10** and a cathode **20** facing each other, and an active layer **30** between the anode **10** and the cathode **20**.

At least one of the anode **10** and the cathode **20** may be a light-transmitting electrode, and the light-transmitting electrode may be made of, for example, a transparent conductor, e.g., indium tin oxide (ITO) or indium zinc oxide (IZO), or a metal thin layer of a thin monolayer or multilayer. When one of the anode **10** and the cathode **20** is a non-light-transmitting electrode, the one of the anode **10** and the cathode **20** may be made of, for example, an opaque conductor (e.g., aluminum (Al)).

For example, the anode **10** and the cathode **20** may both be light-transmitting electrodes.

The active layer **30** includes a p-type semiconductor and an n-type semiconductor to form a pn junction, and absorbs light externally to generate excitons and then separates the generated excitons into holes and electrons.

The active layer **30** may include a p-type active layer disposed near to the anode **10** and including a p-type semiconductor, and an n-type active layer disposed near to the cathode **20** and including an n-type semiconductor. However, the active layer is not limited thereto. For example, the active layer may be a bulk heterojunction in which the p-type semiconductor and the n-type semicon-

ductor are mixed in a monolayer and may be variously applied to a p-type layer/I layer, an I layer/n-type layer, a p-type layer/I layer/n-type layer, or the like.

At least one of the p-type semiconductor and the n-type semiconductor may include an organic semiconductor, the p-type semiconductor may be selected from compounds facilitating the hole transportation into an anode **10**, and the n-type semiconductor may be selected from compounds facilitating the electron transportation into a cathode **20**.

Meanwhile, when applying the reverse bias, a charge may be reversely injected from the anode **10** and the cathode **20** into an active layer **30**. In other words, when applying the reverse bias, electrons may be injected from the anode **10** to the active layer **30**, and holes may be injected from the cathode **20** into the active layer **30**.

In addition, when applying the reverse bias, the dark current may occur from electron-hole pairs at the pn junction of the active layer **30**.

In example embodiments, the dark current density of the organic photodetector **100** may be increased, so that the efficiency and the sensitivity may be deteriorated.

According to example embodiments, by adjusting the charge injection energy barrier between the electrode and the active layer **30** and the energy level of the p-type semiconductor and the n-type semiconductor in the active layer **30**, the charge may be prevented or inhibited from being reversely injected from the electrode to the active layer **30** when applying the reverse bias.

FIG. **2** is a diagram showing an energy level relationship of an electrode and an active layer in an organic photodetector according to example embodiments.

As shown in FIG. **2**, the organic photodetector according to example embodiments includes an anode **10**, an active layer **30** including a p-type semiconductor and an n-type semiconductor, and a cathode **20** which are sequentially stacked, wherein an energy barrier (ΔE_{IB}^{e}) between the anode **10** and the active layer **30** and/or an energy barrier (ΔE_{IB}^{h}) between the cathode **20** and the active layer **30**, and the difference (ΔE_{DA}) of between a highest occupied molecular orbital (HOMO) energy level of p-type semiconductor and a lowest occupied molecular orbital (LUMO) energy level of n-type semiconductor in the active layer **30**, are important factors for preventing or inhibiting the charge from being reversely injected when applying the reverse bias.

The energy barrier (ΔE_{IB}^{e}) between the anode **10** and the active layer **30** may be the energy difference between the work function of the anode **10** and the LUMO energy level of the p-type semiconductor in the active layer **30**, and the energy barrier (ΔE_{IB}^{h}) between the cathode **20** and the active layer **30** may be the energy difference between the work function of the cathode **20** and the HOMO energy level of the n-type semiconductor in the active layer **30**.

For example, the energy barrier (ΔE_{IB}^{e}) between the anode **10** and the active layer **30** may be greater than or equal to about 1.3 eV, and the difference (Δ_{DA}) of the HOMO energy level of the p-type semiconductor and the LUMO energy level of the n-type semiconductor in the active layer **30** may be greater than or equal to about 0.8 eV.

For example, the energy barrier (ΔE_{IB}^{e}) of the anode **10** and the active layer **30** may be about 1.3 eV to about 3.0 eV, and the difference (ΔE_{DA}) between the HOMO energy level of the p-type semiconductor and the LUMO energy level of the n-type semiconductor in the active layer **30** may be about 0.8 eV to about 2.4 eV.

For example, the energy barrier (ΔE_{IB}^{h}) of the cathode **20** and the active layer **30** may be greater than or equal to about 1.3 eV, and the difference (ΔE_{DA}) between the HOMO energy level of the p-type semiconductor and the LUMO energy level of the n-type semiconductor in the active layer **30** may be greater than or equal to about 0.8 eV.

For example, the energy barrier (ΔE_{IB}^{h}) of the cathode **20** and the active layer **30** may be about 1.3 eV to about 30 eV, and the difference (ΔE_{DA}) between the HOMO energy level of the p-type semiconductor in the active layer **30** and the LUMO energy level of the n-type semiconductor may be about 0.8 eV to about 2.4 eV.

For example, the energy barrier (ΔE_{IB}^{e}) of the anode **10** and the active layer **30** may be greater than or equal to about 1.3 eV, and the difference (E_{DA}) between the HOMO energy level of the p-type semiconductor and the LUMO energy level of the n-type semiconductor in the active layer **30** may be greater than or equal to about 0.8 eV.

By satisfying the energy level within the range, the charge injection from the electrode to the active layer **30** may be prevented or inhibited when applying the reverse bias. For example, the electron injection from the anode **10** to the active layer **30** may be prevented or inhibited, and the hole injection from the cathode **20** to the active layer **30** may be prevented or inhibited, when applying the reverse bias. Thereby, the dark current density may be lowered when applying the reverse bias.

For example, by satisfying the energy level within the range, the dark current density may be less than or equal to about 10^{-10} A/cm^{2}when applying a reverse bias of about −3 V.

According to example embodiments, the energy barrier (ΔE_{IB}^{e}) of the anode **10** and the active layer **30** may be greater than or equal to about 1.5 eV, and the difference (ΔE_{DA}) of the HOMO energy level of the p-type semiconductor and the LUMO energy level of the n-type semiconductor in the active layer **30** may be greater than or equal to about 1.0 eV.

According to example embodiments, the energy barrier (ΔE_{IB}^{e}) of the anode **10** and the active layer **30** may be about 1.5 eV to about 3.0 eV, and the difference (ΔE_{DA}) of the HOMO energy level of the p-type semiconductor and the LUMO energy level of the n-type semiconductor in the active layer **30** may be about 1.0 eV to about 2.4 eV.

According to example embodiments, the energy barrier (ΔE_{IB}^{h}) of the cathode **20** and the active layer **30** may be greater than or equal to about 1.5 eV, and the difference (ΔE_{DA}) of the HOMO energy level of the p-type semiconductor in the active layer **30** and the LUMO energy level of the n-type semiconductor may be greater than or equal to about 1.0 eV.

According to example embodiments, the energy barrier (ΔE_{IB}^{h}) of the cathode **20** and the active layer **30** may be about 1.5 eV to about 3.0 eV, and the difference (ΔE_{DA}) of the HOMO energy level of the p-type semiconductor and the LUMO energy level of the n-type semiconductor in the active layer **30** may be about 1.0 eV to about 2.4 eV.

According to example embodiments, the energy barrier (ΔE_{IB}^{e}) of the anode **10** and the active layer **30** may be greater than or equal to about 1.5 eV, the energy barrier (ΔE_{IB}^{h}) of the cathode **20** and the active layer **30** may be greater than or equal to about 1.5 eV, and the difference (ΔE_{DA}) between the HOMO energy level of the p-type semiconductor and the LUMO energy level of the n-type semiconductor at the active layer **30** may be greater than or equal to about 1.0 eV.

For example, by satisfying the energy level within the range, the dark current density may be less than or equal to about 10^{-12} A/cm^2 when applying reverse bias of about −3 V.

FIG. **3** is a graph showing a dark current density according to the energy level difference and the injection barrier when applying a reverse bias of −3 V to the organic photodetector according to example embodiments.

Referring to FIG. **3**, assuming that the thickness of the active layer **30** is 50 nm, the influence of the dark current density by the energy barrier (ΔE_{IB}^{e}, ΔE_{IB}^{h}) between electrodes **10** and **20** and the active layer **30** and the energy level difference (ΔE_{DA}) of the p-type semiconductor and the n-type semiconductor in the active layer **30** when applying the reverse bias of −3 V may be anticipated, and thereby, a p-type semiconductor and/or an n-type semiconductor may be selected by determining the desirable dark current density and considering the energy level.

At least one of the p-type semiconductor and the n-type semiconductor in the active layer **30** may be a material selectively absorbing a part of the visible ray wavelength region, for example, at least one of the p-type semiconductor and the n-type semiconductor may be a material selectively absorbing a green wavelength region.

The energy level is related to the absorption wavelength of the active layer **30**.

FIG. **4** is a graph showing a relationship between the absorption wavelength of the organic photodetector according to example embodiments and the energy level of the p-type semiconductor and the n-type semiconductor.

FIG. **4** shows the energy level of the p-type semiconductor and the n-type semiconductor which may have the dark current density of less than or equal to about 10^{-10} A/cm^2 when applying reverse bias of about −3 V. For example, when applying reverse bias of −3 V in a green wavelength region of about 535 nm, the LUMO energy level of the n-type semiconductor, the HOMO energy level of the p-type semiconductor, and LUMO energy level may be determined to provide a dark current density of less than or equal to about 10^{-10} A/cm^2.

For example, when the anode **10** is ITO (work function: about 4.8 eV), and when the LUMO energy level of n-type semiconductor is about −4.1 eV, the p-type semiconductor may be selected from materials satisfying each the LUMO energy level of about −2.6 to about −3.5 eV and the HOMO energy level of about −4.9 to about −5.8 eV.

For example, when the anode **10** is ITO, and when the n-type semiconductor is C_{60} (LUMO energy level about −4.5 eV), the p-type semiconductor may be selected from materials satisfying the HOMO energy level of about −5.3 to about −5.8 eV.

In other words, one may easily select an n-type semiconductor or a p-type semiconductor to decrease the dark current density by fixing the anode **10** or the cathode **20** and the p-type semiconductor or the n-type semiconductor and considering the energy level.

Therefore, by controlling the charge injection energy barrier between the electrode and the active layer **30** and the energy level of the p-type semiconductor and the n-type semiconductor in the active layer **30**, the charge reverse inflow from the electrode to the active layer **30** may be prevented or inhibited when applying the reverse bias. Accordingly, an additional charge blocking layer, e.g., an electron blocking layer, may not be required for preventing or inhibiting the electron reverse inflow from the anode **10** to the active layer **30** and/or a hole blocking layer may not be required for preventing or inhibiting the hole reverse inflow from the cathode **20** to the active layer **30**.

In the organic photodetector **100**, when light enters from the anode **10** and/or the cathode **20** and when the active layer **30** absorbs light having a given or predetermined wavelength region, excitons may be produced from inside the active layer **30**. The excitons are separated into holes and electrons in the active layer **30**, and the separated holes are transported to the anode **10** and the separated electrons are transported to the cathode **20** so as to flow a current in the organic photodetector.

Hereinafter, an organic photodetector according to example embodiments is described.

FIG. **5** is a cross-sectional view showing an organic photodetector according to example embodiments.

Referring to FIG. **5**, an organic photodetector **200** according to example embodiments includes an anode **10** and a cathode **20** and an active layer **30** between the anode **10** and the cathode **20**, like the example embodiment illustrated in FIG. **1**.

However, the organic photodetector **200** according to example embodiments further includes charge auxiliary layers **40** and **50** between the anode **10** and the active layer **30**, and the cathode **20** and the active layer **30**, unlike the example embodiment illustrated in FIG. **1**. The charge auxiliary layers **40** and **50** may facilitate the transfer of holes and electrons separated from the active layer **30**, so as to increase efficiency.

The charge auxiliary layers **40** and **50** may be at least one selected from a hole injection layer (HIL) for facilitating hole injection, a hole transport layer (HTL) for facilitating hole transport, an electron injection layer (EIL) for facilitating electron injection, and an electron transport layer (ETL) for facilitating electron transport.

The charge auxiliary layers **40** and **50** may include, for example, an organic material, an inorganic material, or an organic/inorganic material. The organic material may be an organic compound having hole or electron characteristics, and the inorganic material may be, for example, a metal oxide, e.g., molybdenum oxide, tungsten oxide, nickel oxide, etc.

The hole transport layer (HTL) may include one selected from, for example, poly(3,4-ethylenedioxythiophene):poly(styrenesulfonate) (PEDOT:PSS), polyarylamine, poly(N-vinylcarbazole), polyaniline, polypyrrole, N,N,N',N'-tetrakis(4-methoxyphenyl)-benzidine (TPD), 4-bis[N-(1-naphthyl)-N-phenyl-amino]piphenyl (α-NPD), m-MTDATA, 4,4',4"-tris(N-carbazolyl)-triphenylamine (TCTA), and a combination thereof, but is not limited thereto.

The electron transport layer (ETL) may include one selected from, for example, 1,4,5,8-naphthalene-tetracarboxylic dianhydride (NTCDA), bathocuproine (BCP), LiF, Alq_3, Gaq_3, Inq_3, Znq_2, $Zn(BTZ)_2$, $BeBq_2$, and a combination thereof, but is not limited thereto.

One of the charge auxiliary layers **40** and **50** may be omitted.

The organic photodetector may be applied to various fields, for example, a solar cell, an image sensor, a photodetector, a photo-sensor, and an organic light emitting diode (OLED), but is not limited thereto.

Hereinafter, an example of an image sensor including the organic photodetector is described referring to drawings. As an example of an image sensor, an organic CMOS image sensor is described.

FIG. **6** is a schematic top plan view of an organic CMOS image sensor according to example embodiments, and FIG. **7** is a cross-sectional view of the organic CMOS image sensor of FIG. **6**.

Referring to FIGS. **6** and **7**, an organic CMOS image sensor **300** according to example embodiments includes a semiconductor substrate **110** integrated with photo-sensing devices **50**B and **50**R, a transmission transistor (not shown), a charge storage device **55**, a lower insulation layer **60**, a color filter layer **70**, an upper insulation layer **80**, and an organic photodetector **100**.

The semiconductor substrate **110** may be a silicon substrate, and is integrated with the photo-sensing device **50**, the transmission transistor (not shown), and the charge storage device **55**. The photo-sensing devices **50**R and **50**B may be photodiodes.

The photo-sensing devices **50**B and **50**R, the transmission transistor, and/or the charge storage device **55** may be integrated in each pixel, and as shown in the drawing, the photo-sensing devices **50**B and **50**R may be included in a blue pixel and a red pixel and the charge storage **55** may be included in a green pixel.

The photo-sensing devices **50**B and **50**R sense light, the information sensed by the photo-sensing devices may be transferred by the transmission transistor, the charge storage device **55** is electrically connected with the organic photodetector **100**, and the information of the charge storage **55** may be transferred by the transmission transistor.

In the drawings, the photo-sensing devices **50**B and **50**R are, for example, arranged in parallel without limitation, and the blue photo-sensing device **50**B and the red photo-sensing device **50**R may be stacked in a vertical direction.

A metal wire (not shown) and a pad (not shown) are formed on the semiconductor substrate **110**. In order to decrease signal delay, the metal wire and pad may be made of a metal having relatively low resistivity, for example, aluminum (Al), copper (Cu), silver (Ag), and alloys thereof, but are not limited thereto. Further, the metal wire and pad may be positioned under the photo-sensing devices **50**B and **50**R.

The lower insulation layer **60** is formed on the metal wire and the pad. The lower insulation layer **60** may be made of an inorganic insulating material, e.g., a silicon oxide and/or a silicon nitride, or a low dielectric constant (low K) material, e.g., SiC, SiCOH, SiCO, and SiOF. The lower insulation layer **60** has a trench exposing the charge storage device **55**. The trench may be filled with fillers.

The color filter layer **70** is formed on the lower insulation layer **60**. The color filter layer **70** includes a blue filter **70**B formed in the blue pixel and a red filter **70**R filled in the red pixel. In example embodiments, a green filter is not included, but a green filter may be further included.

The color filter layer **70** may be omitted. For example, when the blue photo-sensing device **50**B and the red photo-sensing device **50**R are stacked in a vertical direction, the blue photo-sensing device **50**B and the red photo-sensing device **50**R may selectively absorb light in each wavelength region depending on their stack depth, and the color filter layer **70** may not be equipped.

The upper insulation layer **80** is formed on the color filter layer **70**. The upper insulation layer **80** eliminates a step caused by the color filter layer **70** and smoothes the surface. The upper insulation layer **80** and the lower insulation layer **60** may include a contact hole (not shown) exposing a pad, and a through-hole **85** exposing the charge storage **55** of the green pixel.

The organic photodetector **100** is formed on the upper insulation layer **80**. The organic photodetector **100** includes the anode **10**, the active layer **30**, and the cathode **20** as described above.

The anode **10** and the cathode **20** may be transparent electrodes, and the active layer **30** is the same as described above. The active layer **30** selectively absorbs light in a green wavelength region and replaces a color filter of a green pixel.

When light enters from the anode **10**, the light in a green wavelength region may be mainly absorbed in the active layer **30** and photoelectrically converted, while the light in the rest of the wavelength regions passes through cathode **20** and may be sensed in the photo-sensing devices **50**B and **50**R. However, it is not limited thereto, and when light enters from the cathode **20**, the light having a green wavelength region may be mainly absorbed in the active layer **30** and converted to charge, while the light in the rest of the wavelength regions passes through the anode **10** and may be sensed by the photo-sensing devices **50**B and **50**R.

As described above, the organic photodetectors selectively absorbing light in a green wavelength region are stacked and thereby a size of an image sensor may be decreased and a down-sized image sensor may be realized.

In addition, the image sensor may enhance the sensitivity by decreasing the dark current density of the organic photodetector to improve the sensitivity as described above.

In FIG. **7**, the organic photodetector **100** of FIG. **1** is included, but it is not limited thereto, and thus the organic photodetector **200** of FIG. **2** may be applied in the same manner.

The image sensor may be applied to various electronic devices, for example a mobile phone, a digital camera, etc., but is not limited thereto.

While this disclosure has been described in connection with what is presently considered to be practical example embodiments, it is to be understood that the inventive concepts are not limited to the disclosed embodiments, but, on the contrary, is intended to cover various modifications and equivalent arrangements included within the spirit and scope of the appended claims.

What is claimed is:

1. An organic photodetector comprising:

an anode and a cathode facing each other; and

an active layer between the anode and the cathode, the active layer including a p-type semiconductor and an n-type semiconductor,

wherein a difference between a highest occupied molecular orbital (HOMO) energy level of the p-type semiconductor and a lowest unoccupied molecular orbital (LUMO) energy level of the n-type semiconductor is greater than or equal to about 0.8 eV, and

wherein an energy barrier between the active layer and one of the anode and the cathode is greater than or equal to about 1.3 eV.

2. The organic photodetector of claim **1**, wherein the energy barrier between the active layer and one of the anode and the cathode is one of an energy difference between a work function of the anode and a LUMO energy level of the p-type semiconductor and an energy difference between a work function of the cathode and a HOMO energy level of the n-type semiconductor.

3. The organic photodetector of claim **1**, wherein a dark current density of the organic photodetector at a reverse bias of about −3 V is less than or equal to about 10^{-10} A/cm^2.

4. The organic photodetector of claim **1**, wherein:

an energy barrier of the active layer and one of the anode and the cathode is about 1.5 eV; and

the difference between the HOMO energy level of the p-type semiconductor and the LUMO energy level of the n-type semiconductor is greater than or equal to about 1.0 eV.

5. The organic photodetector of claim **4**, wherein a dark current density of the organic photodetector at a reverse bias of about −3 V is less than or equal to about 10^{-12} A/cm^2.

6. The organic photodetector of claim **1**, wherein the active layer comprises:

a p-type layer closest to the anode, the p-type layer including a p-type semiconductor; and

an n-type layer closest to the cathode, the n-type layer including an n-type semiconductor.

7. The organic photodetector of claim **1**, wherein a charge blocking layer is not between the anode and the active layer or between the cathode and the active layer.

8. The organic photodetector of claim **1**, wherein at least one of the p-type semiconductor and the n-type semiconductor selectively absorbs a part of a visible ray wavelength region.

9. The organic photodetector of claim **8**, wherein at least one of the p-type semiconductor and the n-type semiconductor selectively absorbs a green wavelength region.

10. The organic photodetector of claim **8**, wherein:

the anode is indium tin oxide (ITO);

the LUMO energy level of the n-type semiconductor is −4.1 eV; and

the p-type semiconductor is a material having a LUMO energy level of about −2.6 to about −3.5 eV and a HOMO energy level of about −4.9 to about −5.8 eV.

11. The organic photodetector of claim **10**, wherein an electron blocking layer is not between the anode and the active layer.

12. The organic photodetector of claim **8**, wherein:

the anode is ITO;

the n-type semiconductor is C_{60}; and

the p-type semiconductor is a material having a HOMO energy level of about −5.3 to about −5.8 eV.

13. The organic photodetector of claim **12**, wherein an electron blocking layer is not between the anode and the active layer.

14. The organic photodetector of claim **1**, wherein the anode and the cathode are light-transmitting electrodes.

15. An image sensor comprising the organic photodetector of claim **1**.

16. An electronic device comprising the image sensor of claim **15**.

* * * * *