UNITED STATES PATENT AND TRADEMARK OFFICE

BEFORE THE PATENT TRIAL AND APPEAL BOARD

CYTEK BIOSCIENCES, INC.,
Petitioner

v.

BECKMAN COULTER, INC.,
Patent Owner

Case No. PGR2025-00084
U.S. Patent No. 12,174,106 B2
Issue Date: December 24, 2024

Title: FLOW CYTOMETER

**PETITION FOR POST-GRANT REVIEW
OF U.S. PATENT NO. 12,174,106 B2**

Table of Contents

Page

I. INTRODUCTION 1

II. MANDATORY NOTICES UNDER §42.8(A)(1) 2

- A. Real Party-In-Interest under §42.8(b)(1) 2
- B. Related Matters under §42.8(b)(2) 2
- C. Lead and Backup Counsel under §42.8(b)(3) 3
- D. Service Information 4

III. FEE PAYMENT 4

IV. REQUIREMENTS FOR POST-GRANT REVIEW 4

- A. Grounds for Standing 4
- B. Identification of Challenge and Statement of Precise Relief Requested 5
- C. Considerations Under §§ 314(a) and 325(d) 5

V. TECHNOLOGY BACKGROUND 6

- A. Flow Cytometers 6
- B. Wavelength Division Demultiplexers 7
- C. Use of Avalanche Photodiodes (APDs) in Flow Cytometry 10

VI. OVERVIEW OF THE ’106 PATENT 12

VII. LEVEL OF ORDINARY SKILL 14

VIII. CLAIM CONSTRUCTION 14

IX. PRIOIRTY DATE OF THE CHALLENGED CLAIMS 14

X. PRIOR ART SUMMARY 24

- A. Chandler [EX1051] 24
- B. Goodman [EX1016] 24
- C. Oostman [EX1005] 26
- D. Frazier [EX1009] 28

XI. CLAIMS 13, 14, AND 17 ARE OBVIOUS UNDER 35 U.S.C. § 103 28

Table of Contents
(continued)

Page

A. Ground 1: Chandler in View of Goodman Renders Claims 13, 14, and 17 Obvious 28

1. Motivation to Combine Chandler with Goodman and Reasonable Expectation of Success 28

2. Independent Claim 13 31

a. Claim 13[pre]: "A flow cytometer comprising:" 31

b. Claim 13[a]: "a light source arranged to illuminate a stream of particles in a viewing zone;" 32

c. Claim 13[b]: "a collecting optical element configured to collect and focus fluorescent light emitted by a particle illuminated by the light source such that the fluorescent light leaving the collecting optical element converges; and" 34

d. Claim 13[c]: "a wavelength division multiplexer (WDM) configured to separate into color bands the fluorescent light collected by the collecting optical element, the WDM including," 39

e. Claim 13[d]: "a collimating optical element that is separate from the collecting optical element and is arranged to receive the fluorescent light collected by the collecting optical element, the collimating optical element configured to collimate the fluorescent light;" 41

f. Claim 13[e]: "a row of mirrors arranged and configured to sequentially reflect different color bands of the fluorescent light collected by the collecting optical element after the fluorescent light has passed through the collimating optical element," 45

g. Claim 13[f]: "the row of mirrors including at least one curved mirror;" 48

Table of Contents
(continued)

Page

h. Claim 13[g]: "a row of dichroic filters opposed to the row of mirrors, each of the dichroic filters configured to pass one color band of the fluorescent light reflected by a mirror in the row of mirrors, and to reflect another color band of the fluorescent light reflected by the mirror;" 49

i. Claim 13[h]: "a row of semiconductor detectors, each of the semiconductor detectors arranged and configured to detect and quantitate the band of fluorescent light passing through a dichroic filter in the row of dichroic filters." 52

3. Claim 14: "The flow cytometer of claim 13, further comprising a row of focusing optical elements, each of the focusing optical elements in the row arranged and configured to focus the band of fluorescent light passing through a dichroic filter in the row of dichroic filters onto the corresponding semiconductor detector." 55

4. Claim 17: "The flow cytometer of claim 13, wherein the row of mirrors and row of dichroic filters are arranged such that fluorescent light received by the WDM is reflected back and forth between the row of mirrors and the row of dichroic filters in a zig-zag pattern." 58

B. Ground 2: Oostman in View of Goodman and Frazier Renders Claims 13, 14, and 17 Obvious 60

1. Motivation to Combine Oostman with Goodman and Reasonable Expectation of Success 60

2. Motivation to Combine Oostman and Goodman with Frazier and Reasonable Expectation of Success 62

3. Independent Claim 13 63

(a) Claim 13[pre]: "A flow cytometer comprising:" 63

(b) Claim 13[a]: "a light source arranged to illuminate a stream of particles in a viewing zone;" 64

Table of Contents
(continued)

Page

(c) Claim 13[b]: "a collecting optical element configured to collect and focus fluorescent light emitted by a particle illuminated by the light source such that the fluorescent light leaving the collecting optical element converges; and" 65

(d) Claim 13[c]: "a wavelength division multiplexer (WDM) configured to separate into color bands the fluorescent light collected by the collecting optical element, the WDM including," 67

(e) Claim 13[d]: "a collimating optical element that is separate from the collecting optical element and is arranged to receive the fluorescent light collected by the collecting optical element, the collimating optical element configured to collimate the fluorescent light;" 68

(f) Claim 13[e]: "a row of mirrors arranged and configured to sequentially reflect different color bands of the fluorescent light collected by the collecting optical element after the fluorescent light has passed through the collimating optical element," 70

(g) Claim 13[f]: "the row of mirrors including at least one curved mirror" 72

(h) Claim 13[g]: "a row of dichroic filters opposed to the row of mirrors, each of the dichroic filters configured to pass one color band of the fluorescent light reflected by a mirror in the row of mirrors, and to reflect another color band of the fluorescent light reflected by the mirror;" 73

(i) Claim 13[h]: "a row of semiconductor detectors, each of the semiconductor detectors arranged and configured to detect and quantitate the band of fluorescent light passing through a dichroic filter in the row of dichroic filters." 75

Table of Contents
(continued)

Page

4. Dependent Claim 14: "The flow cytometer of claim 13, further comprising a row of focusing optical elements, each of the focusing optical elements in the row arranged and configured to focus the band of fluorescent light passing through a dichroic filter in the row of dichroic filters onto the corresponding semiconductor detector." 77

5. Dependent Claim 17: "The flow cytometer of claim 13, wherein the row of mirrors and row of dichroic filters are arranged such that fluorescent light received by the WDM is reflected back and forth between the row of mirrors and the row of dichroic filters in a zig-zag pattern." 78

XII. THE CHALLENGED CLAIMS ARE INVALID UNDER 35 U.S.C. § 112 79

A. Ground 3: The Challenged Claims Lack of Written Description for a "curved mirror" 79

B. Ground 4: The Challenged Claims Lack Full Scope Enablement for "semiconductor detector" 80

C. Ground 5: The Challenged Claims Lack Written Description Support for "semiconductor detector" With Respect to Carbon Nanotube Detectors 85

XIII. CONCLUSION 85

List of Exhibits

Exhibit No.	Description of Document
1001	U.S. Patent No. 12,174,106 B2 to Yong Qin Chen (filed December 22, 2021, issued December 24, 2024) ("**'106 patent**")
1002	Declaration of Fedor A. Ilkov, Ph.D.
1003	Prosecution History of U.S. Patent No. 12,174,106 B2
1004	Nigel P. Carter and Michael G. Ormerod, *Chapter 1, Introduction to the Principles of flow cytometry*, Flow Cytometry, pp. 1-22 (3rd ed. 2000)
1005	U.S. Patent No. 6,683,314 B2 to Clifford A. Oostman, Jr. et al. (filed August 28, 2001; published January 27, 2004) ("**Oostman**")
1006	U.S. Patent No. 5,317,162 to Bertram G. Pinsky et al. (filed September 9, 1992; published May 31, 1994) ("**Pinsky**")
1007	Excerpts of Howard M. Shapiro, Practical Flow Cytometry (4th ed. 2003) ("**Shapiro**")
1008	World Patent No. WO 2010/101623 A1 to Michael Thomas (filed March 2, 2010; published September 10, 2010) ("**Thomas**")
1009	U.S. Patent No. 8,284,402 B2 to Erich Frazier et al. (filed February 26, 2010; published October 9, 2012) ("**Frazier**")
1010	U.S. Patent No. 4,244,045 to Kiyoshi Nosu et al. (filed January 31, 1979; published January 6, 1981) ("**Nosu**")
1011	U.S. Patent No. 8,537,468 B1 to Xuan Wang et al. (filed June 10, 2011; published September 17, 2013) ("**Wang**")
1012	U.S. Patent No. 6,198,864 B1 to Brian E. Lemoff et al. (filed November 24, 1998; published March 6, 2001) ("**Lemoff**")
1013	U.S. Patent No. 7,212,343 B1 to Chun He et al. (filed July 11, 2003; published May 1, 2007) ("**He**")
1014	U.S. Patent No. 5,835,517 to Vijaysekhar Jayaraman et al. (filed October 4, 1996; published November 10, 1998) ("**Jayaraman**")
1015	U.S. Patent No. 6,201,908 B1 to Eric B. Grann (filed July 2, 1999; published March 13, 2001) ("**Grann**")

List of Exhibits

Exhibit No.	Description of Document
1016	U.S. Patent No. 6,542,306 B2 to Timothy D. Goodman (filed March 16, 2001; published April 1, 2003) ("**Goodman**")
1017	Listing of Challenged Claims
1018	Joint Claim Construction Chart including Exhibit A Parties Agreed and Proposed Constructions filed in *Beckman Coulter, Inc. v. Cytek Biosciences, Inc.*, C.A. No. 24-945 (D. Del. May 28, 2025), D.I. 89 & 89-1
1019	Plaintiff's Disclosure of Asserted Claims and Infringement Contentions [Redacted Version], served in *Beckman Coulter, Inc. v. Cytek Biosciences, Inc.*, C.A. No. 24-945 (D. Del. Feb. 14, 2025)
1020	*Reserved*
1021	*Reserved*
1022	*Reserved*
1023	Steve Wasserman, *Geometrical optics and ray tracing*, Course Wiki (August 27, 2019)
1024	*Reserved*
1025	Complaint filed in *Beckman Coulter, Inc. v. Cytek Biosciences, Inc.*, C.A. No. 1:24-cv-00945 (D. Del. Aug. 14, 2024), D.I. 1
1026	Summons in a Civil Action to Cytek Biosciences, Inc. c/o Cogency Global, Inc. served on August 15, 2024, filed in *Beckman Coulter, Inc. v. Cytek Biosciences, Inc.*, C.A. No. 1:24-cv-00945 (D. Del. Aug. 16, 2024), D.I. 5
1027	Stipulation and Order Amending Scheduling Order filed in *Beckman Coulter, Inc. v. Cytek Biosciences, Inc.*, C.A. No. 1:24-cv-00945 (D. Del. March 4, 2025), D.I. 55
1028	*Reserved*
1029	*Reserved*
1030	Rochelle A. Diamond, *Chapter 8: Quality Control Guidelines for Research Flow Cytometry*, In Living Color, pp. 98-105 (2000)

List of Exhibits

Exhibit No.	Description of Document
1031	R.M.P. Doornbos et al., *White Blood Cell Differentiation Using a Solid State Flow Cytometer*, Cytometry 14:589-594 (1993) ("**Doornbos**")
1032	SensL SPMMini High Gain APD (Oct. 2007)
1033	Menlo Systems APD210/310 High Sensitivity Detector Unit (Apr. 2021)
1034	Thorlabs.com – High-Sensitivity Avalanche Photodetectors website Overview, Specs and Documents & Drawings, (Aug. 31, 2011), https://web.archive.org/web/20110831115024/http://www.thorlabs.com/NewGroupPage9.cfm?ObjectGroup_ID=947
1035	World Patent No. WO 94/29695 to Oddbjørn Gjelsnes (filed June 8, 1993; published December 22, 1994) ("**Gjelsnes**")
1036	Carleton C. Stewart et al., *Flow Cytometer in the Infrared: Inexpensive Modifications to a Commercial Instrument*, Cytometry Part A, 67A:104-111 (2005) ("**Stewart**")
1037	William G. Lawrence et al., *A 16-channel avalanche photodiode detector array for visible and near-infrared flow cytometry*, Imaging, Manipulation, and Analysis of Biomolecules, Cells, and Tissues IV, Proc. of SPIE, Vol. 6088, 60880T, (2006) ("**Lawrence**")
1038	William G. Lawrence et al., *A Comparison of Avalanche Photodiode and Photomultiplier Tube Detectors for Flow Cytometry*, Imaging, Manipulation, and Analysis of Biomolecules, Cells, and Tissues VI, Proc. of SPIE Vol. 6859, 68590M, (2008) ("**Lawrence 2008**")
1039	Shutao Zhao et al., *High gain avalanche photodiode (APD) arrays in flow cytometer opitical [sic] system*, IEEE (2011) ("**Zhao**")
1040	U.S. Patent No. 8,188,438 B2 to Dongqing Li (filed Mar. 8, 2010; published May 29, 2012) ("**Li-438**")
1041	Canadian Patent No. 2 771 324 to Paul Patt (filed Aug. 20, 2010; published June 21, 2016) ("**Patt-324**")
1042	U.S. Patent No. 7,580,120 B2 to Yuichi Hamada et al. (filed Apr. 6, 2006; published Aug. 25, 2009) ("**Hamada**")

List of Exhibits

Exhibit No.	Description of Document
1043	World Patent No. 98/59233 to Van S. Chandler (filed June 22, 1998; published Dec. 30, 1998) ("**Chandler-233**")
1044	U.S. Patent No. 7,523,637 B2 to Wayne D. Roth et al. (filed Nov. 29, 2007; published Apr. 28, 2009) ("**Roth-637**")
1045	U.S. Patent No. 7,505,131 B2 to Wayne D. Roth (filed Mar. 6, 2008; published Mar. 17, 2009) ("**Roth-131**")
1046	U.S. Patent Application Publication No. 2008/0305481 A1 to Douglas F. Whitman et al. (filed Dec. 13, 2007; published Dec. 11, 2008) ("**Whitman**")
1047	U.S. Patent Application Publication No. 2007/0269345 A1 to Adam Richard Schilffarth et al. (filed May 17, 2007; published Nov. 22, 2007) ("**Schilffarth-345**")
1048	U.S. Patent Application Publication No. 2007/0207513 A1 to Keld Sorensen et al. (filed Mar. 5, 2007; published Sept. 6, 2007) ("**Sorensen**")
1049	U.S. Patent Application Publication No. 2009/0071225 A1 to Adam Richard Schilffarth (filed Sept. 17, 2008; published Mar. 19, 2009) ("**Schilffarth-225**")
1050	U.S. Patent Application Publication No. 2009/0237658 A1 to Edward Calvin et al. (filed Apr. 9, 2009; published Sept. 24, 2009) ("**Calvin**")
1051	U.S. Patent No. 6,139,800 to Van S. Chandler (filed June 22, 1998; published October 31, 2000) ("**Chandler**")
1052	Luminex 100™ IS User Manual Version 2.3 (Oct. 2005)
1053	Luminex FlexMap 3D® User Manual (Jan. 2019)
1054	BD Biosciences Immunocytometry Systems Technical Specifications BD FACSArray (Oct. 2003)
1055	*Reserved*
1056	*Reserved*
1057	*Reserved*

List of Exhibits

Exhibit No.	Description of Document
1058	*Reserved*
1059	*Reserved*
1060	Hamamatsu Si APD S5343 to S5345, S9073 to S9075, Short wavelength type APD (Apr. 2004)
1061	Hamamatsu Si APD S8890 series, Long wavelength type APD (June 2010)
1062	Hamamatsu Si APD S2381 to S2385, S5139, S8611, S3884, S4315 series, Low bias operation, for 800 nm band (May 2010)
1063	*Reserved*
1064	*Reserved*
1065	*Reserved*
1066	*Reserved*
1067	*Reserved*
1068	*Reserved*
1069	Joint Claim Construction Brief filed in *Beckman Coulter, Inc. v. Cytek Biosciences, Inc.*, C.A. No. 1:24-cv-00945 (D. Del. July 27, 2025), D.I. 114
1070	U.S. Patent No. 9,746,412 B2 to Yong Qin Chen (filed Nov. 26, 2014; published Aug. 29, 2017) ("'**412**")
1071	Prosecution History of PCT/US2013/043453 (the "**PCT App.**")
1072	2.3: Spherical Mirrors, Bowdoin College, Phys1140: Introductory Physics II: Part 2, https://phys.libretexts.org/Courses/Bowdoin_College/Phys1140:_Introductory_Physics_II:_Part_2/02:_Geometric_Optics_and_Image_Formation/2.03:_Spherical_Mirrors
1073	Michael W. Davidson, Molecular Expressions, Optical Microscopy Primer, Physics of Light and Color, Florida State University (Nov. 13, 2015), https://micro.magnet.fsu.edu/primer/lightandcolor/mirrorsintro.html

List of Exhibits

Exhibit No.	Description of Document
1074	*Reserved*
1075	U.S. Patent No. 11,703,443 B2 to Yong Qin Chen (filed Nov. 4, 2022; published July 18, 2023) ("**'443**")
1076	Prosecution history of EP24151670
1077	Optics: Concave and Convex Mirrors and Lenses, ScienceReady (2025), https://scienceready.com.au/pages/mirrors-and-lenses
1078	U.S. Patent No. 11,255,772 B2 to Yong Qin Chen (filed June 30, 2017; published Feb. 22, 2022) ("**'772**")
1079	Definition of quantitate from Concise Oxford English Dictionary (12th ed. 2011)
1080	M. Salvato et al., *Time response in carbon nanotube/Si based photodetectors*, Sensors and Actuators A292: 71-76 (2019)
1081	Declaration of Dr. David Schaafsma, Ph.D. in Support of Beckman Coulter's Opening Claim Construction Brief, dated June 5, 2025, filed in *Beckman Coulter, Inc. v. Cytek Biosciences, Inc.*, C.A. No. 1:24-cv-00945 (D. Del. July 27, 2025)
1082	Xiaolu Xia et al., *Emerging optoelectronic architectures in carbon nanotube photodetector technologies*, Fundamental Research, 5:1153-1168 (available online in 2023, in print in 2025)
1083	Xiang Cai et al., *Recent progress of photodetector based on carbon nanotube film and application in optoelectronic integration*, Nano Research Energy 2:e9120058:1-18 (2023)
1084	Yue Wang et al., *Advancement in Carbon Nanotubes Optoelectronic Devices for Terahertz and Infrared Applications*, Advanced Electronic Materials, 10:2400124:1-31 (2024)
1085	*Reserved*
1086	*Reserved*
1087	*Reserved*
1088	*Reserved*

List of Exhibits

Exhibit No.	Description of Document
1089	*Reserved*
1090	*Reserved*
1091	*Reserved*
1092	*Reserved*
1093	*Reserved*
1094	*Reserved*
1095	*Reserved*
1096	*Reserved*
1097	*Reserved*
1098	*Reserved*
1099	*Reserved*
1100	*Reserved*
1101	*Reserved*
1102	*Reserved*
1103	Markman Hearing Transcript from *Beckman Coulter, Inc. v. Cytek Biosciences, Inc.*, C.A. No. 24-945 (D. Del. August 21, 2025)

I. INTRODUCTION

Cytek Biosciences, Inc. ("Petitioner") requests post-grant review ("PGR") of U.S. Patent No. 12,174,106 B2 ("'106 patent" or "EX1001"), Claims 1, 2, 10, 11, 13, 14, 17 (collectively, the "Challenged Claims").

The Challenged Claims attempt to capture decades-old demultiplexing technology from the analogous field of optical communications to the detection optics in a flow cytometer. This WDM—wavelength division [de]multiplexer—separates fluorescent and scattered light, collected from a flow cell and transported through an optical fiber, into distinct color bands (i.e., wavelength ranges) for photodetection through use of a series of filters and mirrors. But the claimed WDM configuration had been publicly disclosed in flow cytometry before the time of the alleged invention, including in Patent Owner's own publications. (EX1009.) The only remaining point of purported novelty (use of a "semiconductor detector") had been used in flow cytometers for over twenty years and is also disclosed in **EX1009**. Petitioner's grounds logically combine and apply these well-known features from the prior art to demonstrate the obviousness of the Challenged Claims.

Concurrently, the Challenged Claims overreach and are invalid under § 112. Every independent claim generally recites a "curved mirror" that is unsupported by the written description. Examiners at the European Patent Office ("EPO") recognized this issue during prosecution of EP2415670, that shares the same priority

applications as the '106 patent. In issuing a rejection on the claims, examiners at the EPO indicated that "a curved mirror is introduced, but the parent application does not disclose a generic curved mirror, but a concave mirror." (EX1076, p.039 (underlining added).) Rather than provide the examiners with citations to the written description to support "curved mirror," Patent Owner amended its claims to narrow curved mirror to the only mirror supported by the written description—a concave mirror. (*Id*., p.016.)

The Challenged Claims also recite a "semiconductor detector" that the specification identifies as including carbon nanotube detectors. But carbon nanotube detectors were not commercially available by December 2021 or anytime earlier, and the '106 specification provides no guidance on how a POSA would have procured, implemented, or designed a carbon nanotube detector for use in the claimed flow cytometer. Carbon nanotube detectors lack written description support and are not enabled.

II. MANDATORY NOTICES UNDER §42.8(A)(1)

A. Real Party-In-Interest under §42.8(b)(1)

Cytek Biosciences, Inc. ("Petitioner") is the real party-in-interest.

B. Related Matters under §42.8(b)(2)

The '106 patent is asserted in pending litigation involving Petitioner and Patent Owner: *Beckman Coulter, Inc. v. Cytek Biosciences, Inc.*, No. 1:24-cv-00945-

CFC-EGT (D. Del.). The Complaint in this related litigation was first served on August 15, 2024. (EX1025; EX1026.) Petitioner recently challenged the related U.S. Patent No. 11,703,443 in *Cytek Biosciences, Inc. v. Beckman Coulter, Inc.*, IPR2025-01319 and submitted a third-party request for reexamination of U.S. Patent No. 10,330,582 (Control No. 90/015,441).

C. Lead and Backup Counsel under §42.8(b)(3)

Petitioner provides the following designation of counsel:

LEAD COUNSEL	BACKUP COUNSEL
Dustin M. Knight (Reg. No. 76,239) dknight@cooley.com COOLEY LLP ATTN: Patent Group 1299 Pennsylvania Ave. NW, Suite 700 Washington, DC 20004 Tel: (202) 776-2066 Fax: (202) 842-7899	Reuben Chen (*Pro hac vice* application to be submitted) rchen@cooley.com COOLEY LLP ATTN: Patent Group 1299 Pennsylvania Avenue NW Suite 700 Washington, DC 20004 Tel: (650) 843-5480 Fax: (650) 849-7400
	Adam Pivovar (*Pro hac vice* application to be submitted) apivovar@cooley.com COOLEY LLP ATTN: Patent Group 1299 Pennsylvania Ave. NW, Suite 700 Washington, DC 20004 Tel: (202) 842-7889 Fax: (202) 842-7899
	HanByul Chang (*Pro hac vice* application to be submitted)

LEAD COUNSEL	BACKUP COUNSEL
	hanbyul.chang@cooley.com COOLEY LLP ATTN: Patent Group 1299 Pennsylvania Ave. NW, Suite 700 Washington, DC 20004 Tel: (650) 843-5405 Fax: (650) 849-7400

D. Service Information

This Petition is being served by Federal Express to the attorney of record for the '106 patent, 129381 – NORTON ROSE FULBRIGHT US LLP – BCI, 98 San Jacinto Blvd., Suite 1100, Austin, TX 78701. This Petition is also being served on litigation counsel for Patent Owner identified in the Certificate of Service.

Please send all correspondence to the lead and backup counsel at the addresses shown above. Petitioner consents to electronic service at the email addresses provided above for lead and backup counsel.

III. FEE PAYMENT

Petitioner requests review of 7 claims, with a $59,375 payment.

IV. REQUIREMENTS FOR POST-GRANT REVIEW

A. Grounds for Standing

Petitioner certifies that the '106 patent is available for PGR, and that Petitioner is not barred or otherwise estopped. 35 U.S.C. § 321(c); 37 C.F.R. § 42.202(a). This Petition is being filed within 9 months of the '106 patent's issuance (issued

December 24, 2024), and, for the reasons stated in Section IX, is entitled to an effective filing date no earlier than its non-provisional utility application filing date, December 22, 2021.

B. Identification of Challenge and Statement of Precise Relief Requested

Petitioner requests PGR institution based on:

Ground	Claims	Basis for Challenge
1	13, 14, 17	Unpatentable under 35 U.S.C. § 103 as obvious over Chandler and Goodman
2	13, 14, 17	Unpatentable under 35 U.S.C. § 103 as obvious over Oostman, Goodman, and Frazier
3	1, 2, 10, 11, 13, 14, 17	Unpatentable for lack of written description support under 35 U.S.C. § 112 based on "curved mirror"
4	1, 2, 10, 11, 13, 14, 17	Unpatentable for lack of enablement under 35 U.S.C. § 112 based on "semiconductor detector"
5	1, 2, 10, 11, 13, 14, 17	Unpatentable for lack of written description support under 35 U.S.C. § 112 based on "semiconductor detector"

Submitted with this Petition is the Declaration of Fedor A. Ilkov, Ph.D. [**EX1002**], a qualified technical expert. (EX1002, ¶¶1-9, App. A.)

C. Considerations Under §§ 314(a) and 325(d)

Discretionary denial is inappropriate, as Petitioner will explain in its opposition to any discretionary denial brief that Patent Owner elects to submit under the USPTO's March 26, 2025 Interim Processes for PTAB Workload Management.

V. TECHNOLOGY BACKGROUND

A. Flow Cytometers

Flow cytometers are optical instruments capable of detecting and measuring particles, cells, or beads flowing through a flow channel. In a flow cytometer, light sources, such as one or more lasers, illuminate the sample flowing through a flow channel at different points within the flow channel. (EX1002, ¶43.) Particles, cells, or beads are often tagged with fluorescent markers, such as fluorescent dyes, that emit light of certain wavelengths when illuminated by one or more lasers. (*Id*.) Laser light incident on the particles, cells, or beads can be either scattered or absorbed by the fluorescent markers; the absorbed light can result in a fluorescence emission from the fluorescent markers. (*Id*.) The scattered light and the fluorescent light can be collected, detected, and with detected signals digitized for further quantitative analysis of the analyzed particles, cells, or beads. (*Id*.; EX1004, pp.010, 016-017.)

Fluorescence detection-based flow cytometers, like the one described in the ’106 patent, typically comprise four subsystems: (1) illumination subsystem with optics and electro-optics (e.g., a laser or arc lamp); (2) a fluidic subsystem, including the flow channel permitting samples to flow in suspension to an illumination site; (3) collection subsystem with optics, such as an objective lens, to collect and focus the scattered and/or fluorescent light; and (4) detection subsystem with optics and

electro-optics that separate the collected light into multiple color bands and direct those bands into photodetectors for further analysis. (EX1002, ¶44; EX1004, pp.016-024.) A general schematic for a flow cytometer is shown below:

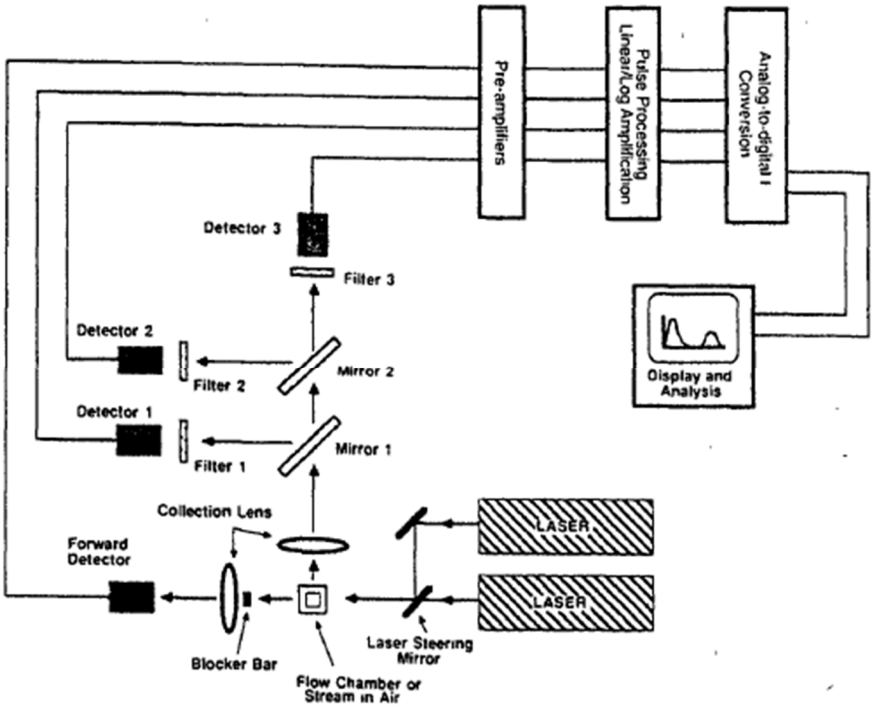

Figure 4 A generalized flow cytometer system.

(EX1004, p.017.)

B. Wavelength Division Demultiplexers

Detection in fluorescence detection-based flow cytometers typically involves spectrally separating collected light into multiple color bands (i.e., wavelength ranges) and then directing those color bands into separate photodetectors. A POSA would have known that a "wavelength division [de]multiplexer" or "WDM" refers to the optical components that demultiplex light into those color bands. (EX1002,

¶45.) WDMs accomplish spectral separation through the use of filters, mirrors, and lenses to separate light into color bands and focus those color bands into photodetectors. (*Id*., ¶46.)

Multiple WDM configurations existed in the art by 2011. (EX1002, ¶¶46-47.) Multiple prior art references disclosed a well-known linear branch configuration of WDMs. (EX1006, FIG. 1; EX1007, p.082 (Fig. 1-21); EX1008, FIG. 1, [0017].) The '106 patent also describes a WDM "star configuration" disclosed by Oostman **[EX1005]** (*see* '106, 5:18-25).

The '106's zig-zag WDM was also a well-known demultiplexing configuration in flow cytometry. For example, Patent Owner's own disclosures in Frazier **[EX1009]** show optical fibers that transport light collected from a flow cell, where the light is collimated by a lens and then spectrally separated for detection by zig-zagging between arrays of filters and mirrors.

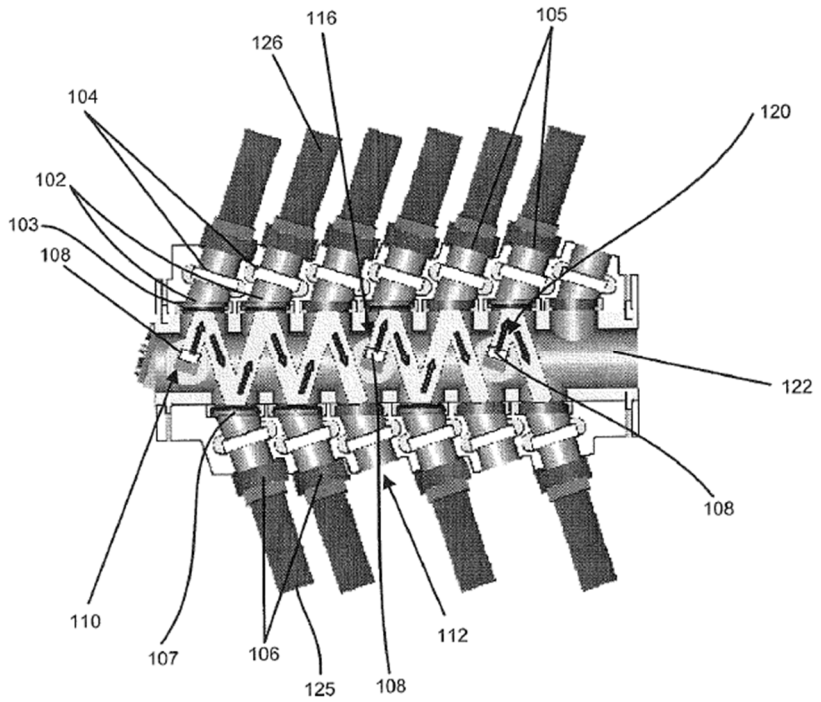

(Frazier, FIG. 1; *see also id.*, 4:14-5:17, 7:3-17, 7:34-61; EX1002, ¶48.)

This zig-zag configuration was commonly used for both single mode and multimode optical fiber waveguides in the optical communication industry, which a POSA would have considered an analogous field to flow cytometry. (EX1002, ¶49.) The '106 patent admits that "WDM techniques well-established in the optical communication industry can be readily adapted for fluorescence light detection," indicating that the optical communication industry is an analogous field of art. ('106, 4:57-67; EX1002, ¶50.) A POSA would have expected such, particularly because the WDMs in both fields are "almost identical in function and architecture," addressing the same set of problems in light demultiplexing and detection. ('106, 44:40-47.)

Numerous examples from the optical communication industry disclose a zig-zag WDM configuration. (EX1002, ¶¶50-52 (citing EX1011-EX1015).) Goodman [**EX1016**], described below, is an example of this zig-zag WDM configuration that was already well-established in the art by 2011. (EX1002, ¶52.)

C. Use of Avalanche Photodiodes (APDs) in Flow Cytometry

The '106 patent acknowledges that flow cytometers can use avalanche photodiodes (APDs), known semiconductor detectors. ('106, 43:64-44:8; EX1002, ¶53.) APDs had been used in fluorescence light detection for flow cytometers for almost twenty years before the date of the alleged invention; their benefits were well-known; and technical hurdles to their implementation had long been overcome. (EX1002, ¶¶54-56 (citing EX1031, 1032, 1033, 1007).)

As early as 1994, numerous sources disclosed use of APDs for fluorescence detection in flow cytometers. (EX1002, ¶¶57-61 (citing EX1035-EX1042).) These references recognized the multiple advantages and benefits of using APDs over photomultiplier tubes (PMTs) or other types of detectors. (EX1002, ¶¶56-61.) Specifically, by 2011, the APD was well-known as an "excellent photo-counting device, whose features include the following: excellent photon detection efficiency; high gain 10^5-10^6; room temperature operation; insensitive to magnetic fields; excellent time resolution, that are important for the laboratory-built optical system." (EX1039, p.002; *see also* EX1032, p.001; EX1035, 6:10-13 (superior in weak

fluorescent light environment); EX1036, pp.003, 006; EX1037, p.009 (high quantum efficiency in IR region); EX1038, p.010 (better signal-to-noise ratio as PMTs in red and near IR spectral regions); EX1002, ¶¶58-60.)

With advances in APD technology and their known benefits, use of APD photodetectors in flow cytometers arose with more frequency in commercial systems and the patent literature, including for Patent Owner. (EX1002, ¶¶61-62.) Frazier, discussed with respect to Ground 2, recognizes that its zig-zag WDM could use APDs. (Frazier, 4:19-21.) Other pre-2011 flow cytometry patents similarly discuss use of APDs for fluorescence detection in flow cytometers. (*See, e.g.*, EX1040, 13:5-19; EX1041, [0020]; EX1042, Abstract.) Researchers began swapping out PMTs for APDs in commercial flow cytometers without difficulty. (EX1036 (Becton Dickinson); EX1037, p.001; EX1002, ¶¶58-59.)

Commercial flow cytometers with APDs were also available by 2011. (EX1002, ¶62.) Partec, Optoflow, and Becton Dickinson sold flow cytometers using APDs as early as 2003. (EX1007, p.155; EX1054, p.002.) Luminex Corporation also sold several flow cytometer systems (e.g., Luminex 100, Luminex 200, and Luminex Flexmap 3D System) that implemented APD detector arrays, obtaining patent rights to the technology as early as the late 1990s. (*See* EX1002, ¶62 (citing EX1043-EX1050).) Chandler **[EX1051]**, discussed with respect to Ground 1, is a Luminex patent that implements APDs within a flow cytometer.

VI. OVERVIEW OF THE '106 PATENT

The '106 patent discloses a flow cytometer that includes (1) a laser diode (LD) based optical subsystem **50**; (2) a composite microscope objective **60**; (3) a fluidic subsystem **70** for supplying a liquid sheath flow; (4) a peristaltic pump **80** for injecting a liquid sample flow; and (5) the wavelength division (de)multiplexer (WDM) **90**. ('106, 28:4-25; *see also id.*, FIG. 1.) The composite microscope objective **60** is configured to "gather[] and imag[e] light scattered and/or fluoresced by particles in the viewing zone." (*Id.*, 28:16-18.)

The '106 patent's WDM comprises a collimating optical element that projects a collimated beam into an array of filters and mirrors, while maintaining the size of the beam throughout. (*See, e.g.*, '106, 2:31-40, 4:41-62, 5:3-29, 6:46-57, 8:58-62, 9:56-10:3, 20:26-41, 21:3-18, 21:47-55.) FIG. 25 represents an optical ray trace of the collimated beam for an exemplary six-port WDM using a zig-zag configuration:

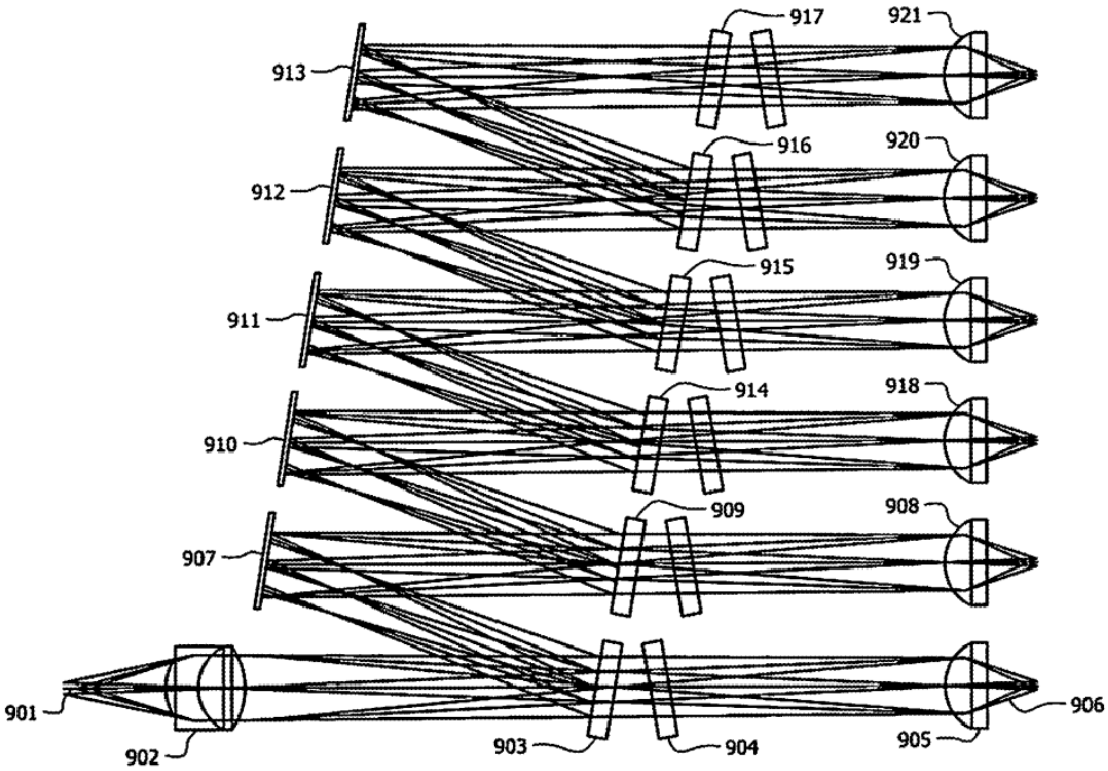

FIG. 25

(*Id.*, FIG. 25.) Dichroic filters **903**, **909**, **914**, **915**, **916**, **917** separate the collimated beam passing through collimating optical element **902** into multiple color bands (i.e., wavelength ranges), "pass[ing] the color band of interest" to a focusing lens **905** to focus light into a photodetector. (*Id.*, 45:24-32, 45:37-46, FIG. 25.) The remaining color bands in the collimated light incident on dichroic filter **903** are reflected toward and impinge on a next relay element, e.g., a concave mirror **907**. (*Id.*, 45:49-50.) The process continues to separate and process additional color bands in the collimated beam as the beam zig-zags between mirrors **907**, **910**, **911**, **912**, **913** and the dichroic filters **903**, **909**, **914**, **915**, **916**, **917**. (*Id.*, 46:10-16.)

VII. LEVEL OF ORDINARY SKILL

A person of ordinary skill in the art ("POSA") as of December 2021 would have had at least an B.S. in physics, mechanical engineering, electrical engineering, or optical engineering (or equivalent degree) and at least two years of experience in designing optical and electro-optical systems, including for flow cytometer applications. A person could also have qualified as a POSA with a combination of (1) more formal education (such as a doctoral degree) and less technical experience, or (2) less formal education and more technical or professional experience. (EX1002, ¶14.)

VIII. CLAIM CONSTRUCTION

Petitioner and Patent Owner have exchanged proposed constructions in the underlying district court litigation. (EX1027.) The district court has resolved some, but not all, disputed constructions. (*See* EX1103, pp.71-75, 133-135, 182-183, 192-193.) For the remaining disputes, the claims are invalid whether the Board adopts the constructions proposed by Patent Owner or Petitioner, where a party proposes a construction instead of alleging a term is indefinite. (EX1002, ¶73.)

IX. PRIOIRTY DATE OF THE CHALLENGED CLAIMS

The '106 patent is PGR eligible because the Challenged Claims are entitled to a priority date no earlier than December 22, 2021. The '106 patent is a "transitional" application because it was filed after the March 16, 2013 effective date of the AIA

but claims priority to an application filed before that date. The '106 patent is a continuation of U.S. Patent No. 11,255,772 ("'772 patent") [**EX1078**], which is a divisional of U.S. Patent No. 9,746,412 ("'412 patent") [**EX01070**], which is a continuation-in-part of international patent application No. PCT/US2013/043453 ("PCT App.") [**EX1071**].[1]

[1] The '106 patent also purports to claim priority to multiple provisional patent applications, including four pre-AIA provisional applications. These provisional applications do not provide written description support for "curved mirror" or "semiconductor detector" for the same reasons that the '772 patent, '412 patent, and PCT App. lack written description support for the full scope of these claim elements, as described below:

The independent claims of the '106 patent each recite a "**curved mirror**," but the written description in the earlier-filed '772 patent, '412 patent, and PCT App. does not support the recited limitation of a "curved mirror." The term "curved mirror" appears in the priority chain for the first time in the '106 patent claims. (EX1002, ¶81.) Prior disclosures teach a "concave mirror" that fail to indicate the

inventor was in possession of a "curved mirror" as of the filing dates of either the '772 patent, '412 patent, or the PCT App. (*Id.*)

Under 35 U.S.C. § 120, a proper priority claim to an earlier-filed application requires compliance with 35 U.S.C. § 112's written description requirement. *Lockwood v. Am. Airlines, Inc.*, 107 F.3d 1565, 1571-72 (Fed. Cir. 1997). That is, the written description must sufficiently convey "to a person of skill in the art that the patentee had possession of the claimed invention at the time of the application, i.e., that the patentee invented what is claimed." *Lizardtech, Inc. v. Earth Res. Mapping Inc.*, 424 F.3d 1336, 1345 (Fed. Cir. 2005); *Purdue Pharma L.P. v. Faulding Inc.*, 230 F.3d 1320, 1323 (Fed. Cir. 2000). "Entitlement to a filing date extends only to subject matter that is disclosed; not to that which is obvious." *Rsch. Corp. Techs., Inc. v. Microsoft Corp.*, 627 F.3d 859, 870 (Fed. Cir. 2010). "'[P]ossession' or reduction to practice outside of the specification is not enough." *Mondis Tech. Ltd. v. LG Elecs. Inc.*, No. 2023-2117, slip op. at 14 (Fed. Cir. Aug. 8, 2025) (quoting *Ariad Pharms., Inc. v. Eli Lilly & Co.*, 598 F.3d 1336, 1352 (Fed Cir. 2010) (en banc)).

Written description for the earlier-filed '772 patent, '412 patent, and PCT App. only describe concave mirrors in the WDM. (EX1002, ¶87.) The written description provides:

> Light reflected from the dichroic filter **903** may impinge upon a second optical element **907**, **<u>such as a concave mirror.</u>** The **<u>concave mirror</u>** **907** may a [sic] radius of curvature approximately equal to the distance between the collimating optical element **902** and the image near focusing lens **905**. The **<u>concave mirror</u>** **907** therefore creates a second image of the collimating lens **902** near a second focusing lens **908**. The light beam between the **<u>concave mirror</u>** **907** and the second image at the lens **908** may have substantially the same diameter as the beam of light between the collimating lens **902** and the first image near the focusing lens **905**. The relay imaging **<u>concave mirror</u>** **907** therefore effectively doubles the collimated beam path without expanding the beam's diameter.

('772, 45:26-39; '412, 45:6-19; PCT App., p.170 (43:14-26) (emphasis added).)

But the term "curved mirror" is broader than "concave mirror." The existence of multiple mirror types with different curvatures was well-known as of the filing dates for the '772 patent, '412 patent, and PCT App. (EX1002, ¶¶84-86.) Broadly speaking, curved mirrors can be concave or convex depending on the mirror's radius of curvature. A ***positive*** radius of curvature indicates an inward curve for the mirror—a concave mirror—that causes incident light rays to ***converge*** (or become less divergent) from the surface of the mirror:

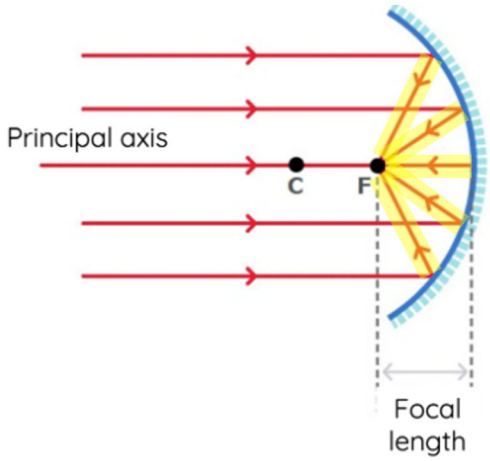

(*Id*., ¶84.) A mirror with a ***negative*** radius of curvature indicates an outward curve for the mirror—a convex mirror—that causes incident light rays to ***diverge*** from the surface of the mirror:

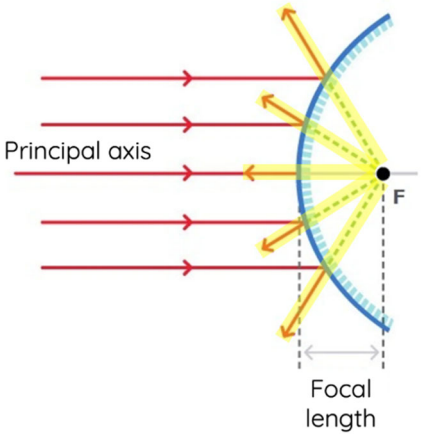

(*Id*.) Even within these broad categories, concave mirrors and convex mirrors may include more specific geometries (e.g., spherical, aspherical, parabolic, ellipsoidal, hyperboloidal) that uniquely affect how incident light is shaped and will travel when reflected by the mirror. (*Id*., ¶85.) And a POSA would have understood that convex mirrors and concave mirrors are not functionally interchangeable. (*Id*., ¶¶90-91.)

Nowhere in the ’772 patent, ’412 patent, the PCT App. or the provisional applications do the written descriptions recite a “curved mirror” or convex mirrors. (EX1002, ¶¶87, 89.) This is no accident. Because concave mirrors lessen the divergence of light rays within an incident beam of light, the written descriptions teach that they are useful to “extend the collimated distance” of a collimated beam within the WDM. (*See* ’772, 45:26-39; ’412, 45:6-19; PCT App., p.170 (43:14-26); EX1002, ¶¶88-89.) This teaching aligns with broader, consistent teachings in the written description about how the claimed invention propagates a collimated beam of light through its WDM cascaded 1:1 relay architecture for “efficient photodetection.” (*See* ’772, 45:14-17, 45:59-64; ’412, 44:61-64, 45:39-44; PCT App., p.050, (43:2-5), p.051 (44:2-6); EX1002, ¶¶88-89.)

In contrast, the written description lacks any “blaze marks” to indicate to a POSA that the inventors had possession of the broader “curved mirror” limitation that would necessarily include convex mirrors. (EX1002, ¶¶90-91.) Nowhere does the written description teach or suggest use of convex mirrors in a WDM as § 112(1) requires. *See, e.g., Purdue Pharma*, 230 F.3d at 1326-27 (no “blaze marks” directing POSA to specific species); *Mondis Tech.*, slip op. at 9-11 (lack of written description for broader “type of said display unit” limitation when specification only supported specific display unit).

The term “curved mirror” in the ’106 claims is not a stand-in for “concave

mirror" but contemplates a broader set of (undisclosed) mirror types. (EX1002, ¶83 & n.2, ¶86.) In U.S. Patent No. 11,703,443 ("'443 patent") [**EX1075**], a continuation of the '106 patent that shares the same written description as the '412 patent, the applicant recited "curved mirror" in independent Claim 1 and then specified that the "curved mirror" could be a "concave mirror" in dependent Claim 6. (*See* EX1075, cls. 1 (reciting "at least one curved mirror"), 6 (reciting "the at least one curved mirror is a concave mirror.").) Claim differentiation instructs that, by reciting that the "curved mirror" may comprise "concave mirror" in a narrower dependent claim, the applicant intended for "curved mirror" to be broader. *See, e.g.*, *Phillips v. AWH Corp.*, 415 F.3d 1303, 1324-25 (Fed. Cir. 2005). (*See also* EX1002, ¶83 & n.2, ¶86.)

Examiners at the European Patent Office reached the same conclusion that the written description cannot support the full scope of "curved mirror." During (still ongoing) prosecution of a foreign counterpart to the '443 patent that shares the same specification as the '106 patent, EP24151670, Patent Owner originally asserted nearly identical claims to those recited in the '443 patent, including a "curved mirror." (EX1076, p.056.) But the examiners rejected those claims on multiple grounds, including:

> Furthermore in claim 1 a curved mirror is introduced, but the parent application does not disclose a generic curved mirror, but a <u>concave mirror</u>

(*Id.*, p.039.) Rather than provide the examiners with citations to the written

description to support "curved mirror," Patent Owner instead narrowed its claims to narrow curved mirror to the only mirror supported by the written description—a concave mirror:

New Claims

1. A flow cytometer (40) that comprises:
a multimode optical fiber (852); and
a wavelength division multiplexer (WDM) (90) configured to receive light from the multimode optical fiber (852), the WDM (90) comprising:
a first optical element (902);
a set of dichroic filters (903, 909, 914, 915, 916, 917), wherein:
the first optical element (902) is positioned in an optical path of the light received from the multimode optical fiber (852) upstream of the set of dichroic filters; and
each dichroic filter of the set of dichroic filters is configured to pass a corresponding portion of multiple portions of the light received from the multimode optical fiber (852);
at least one mirror (907, 910, 911, 912, 913) including at least one ~~curved~~ concave mirror, the at least one mirror configured to:
receive one or more portions of the light from the set of dichroic filters; and
reflect the one or more portions of the light to the set of dichroic filters; and
a set of avalanche ~~detectors~~photodiodes (APDs), each ~~detector~~ APD of the set of ~~detectors~~ APDs corresponding to a dichroic filter of the set of dichroic filters and configured to receive a portion of the light at the ~~detector~~ APD that passed through the dichroic filter corresponding to the ~~detector~~APD.

(*Id*., p.016 (annotated).) Patent Owner then pointed to passages from the

specification that only support a "concave mirror" in its remarks on the amendments:

> • that the curved mirror is a "concave mirror" (see Specification at paragraphs [0034], [0069]); and

(*Id*., p.026.)

Patent Owner also made a passing comment that the written description's generalized disclosure that "other types of refractive and/or reflective optical components may also be used to achieve the same design goal," (EX1076, p.027; *see also* '772, 4:63-64; '412, 4:59-60; PCT App., p.022 (15:20-22)), but such an argument, at best, suggests that it would be *obvious* to a POSA reading the specification to (unduly) experiment with curved mirrors that were not concave. (EX1002, ¶¶89-91.) The written description requirement is more exacting, and some unarticulated explanation of the general knowledge of a person of ordinary skill cannot bridge the gap. *Rsch. Corp. Techs.*, 627 F.3d at 870.

In addition to lack of written description for "curved mirror," the Challenged Claims lack written description for "semiconductor detector" for the reasons provided in Ground 5 below, incorporated here.

For these reasons, the Challenged Claims are not entitled to claim priority to any prior date except for the filing date of the patent application that issued into the '106 patent, December 22, 2021, and are PGR eligible.

X. PRIOR ART SUMMARY

A. Chandler [EX1051]

Chandler **[EX1051]** is a patent issued on October 31, 2000, titled "Interlaced Lasers for Multiple Fluorescence Measurement." Chandler qualifies as prior art under pre-AIA §102(b) and AIA §102(a)(1). Chandler discloses an improved fluorescence detection-based flow cytometer that uses multiple lasers to irradiate fluorescence-tagged materials in a flow cell ("viewing chamber"). The light is gathered by multiple collecting optical units ("optical detectors") routed through multimode optical fibers into filtering, amplification, and digital conversion units ("FADC units") for demultiplexing, detection, digital conversion, and signal processing. (Chandler, 4:62-5:4, 5:23-33, 7:24-45; *see also id.*, FIG. 4.) Each FADC unit consists of a set of standard bandpass filters, a set of standard photodetectors, and a set of standard analog-to-digital converters. (Chandler, 3:66-4:15, 7:46-49.) The photodetectors may be avalanche photodiode detectors ("APDs"). (*Id.*, 4:6-8, 5:30-32, 8:32-34.)

B. Goodman [EX1016]

Goodman **[EX1016]** is a patent issued on April 1, 2003, titled "Compact Multiple Channel Multiplexer/Demultiplexer Devices." Goodman qualifies as prior art under pre-AIA §102(b) and AIA § 102(a)(1). Goodman identifies, and proves a solution for, conventional, bulky WDMs with optical attenuation issues. (Goodman,

3:37-44.) Goodman depicts an exemplary WDM device **10** in FIG. 1 below:

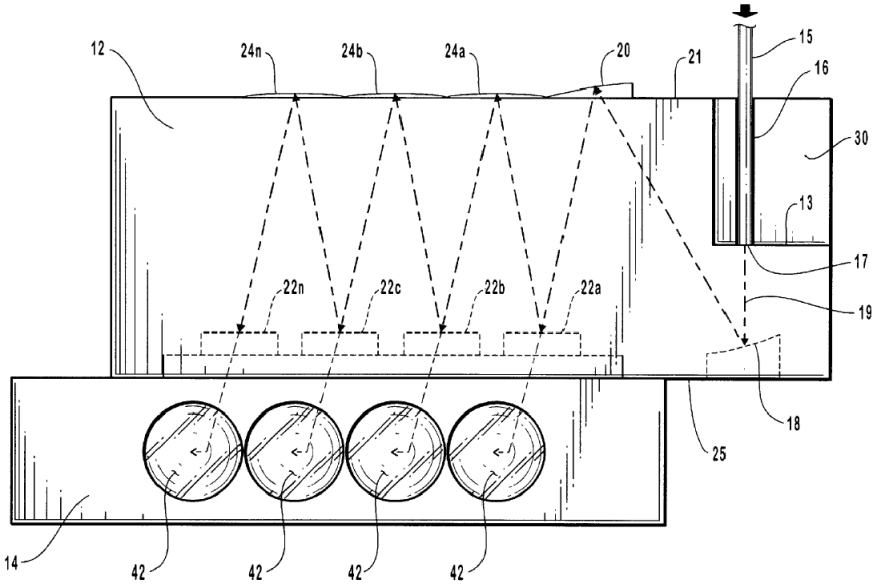

FIG. 1

(*Id*., FIG. 1.)

WDM device **10** includes an optical block **12**, configured to receive an optical beam **19** through an optical fiber **15**. (Goodman, 7:1-3, 7:17-21.) The optical beam **19** first impinges on imaging optical element **18** that reflects the beam to imaging optical element **20**. (*Id*., 7:17-30.) Imaging optical element **20** then reflects optical beam **19** onto a first of a set of wavelength selective elements **22***a*-**22***n*, "each capable of transmitting a selected range of wavelengths within beam **19** and reflecting other wavelengths." (*Id*., 8:21-26.) Selected ranges of wavelengths transmitted through wavelength selective elements **22***a*-**22***n* travel into a beam-directing member **14** that includes a set of focusing lenses **42** within each optical channel that focuses a selected wavelength beam into a corresponding optical receiver, such as a detector.

(*Id.*, 10:45-51, 11:30-41.) A set of reflectors **24***a*-**24***n* is positioned on the top surface of the optical block **12**, opposite from the wavelength selective elements **22***a*-**22***n*, such that "each of the reflectors directs beam **19** from one wavelength selective element to an adjacent wavelength selective element." (*Id*., 9:58-67.)

C. Oostman [EX1005]

Oostman **[EX1005]** is a patent issued on January 27, 2004, titled "Fluorescence Detection Instrument with Reflective Transfer Legs for Color Decimation," that discloses "an improved system for detecting fluorescent light having multiple colors emitted from a target[.]" (Oostman, 2:60-63.) The preferred embodiment of the invention features a flow cytometer that uses multiple WDMs for fluorescent and scattered light color band separation and detection. (*Id*., 5:33-37.) Oostman qualifies as prior art under pre-AIA §102(b) and AIA § 102(a)(1).

Oostman discloses an optical instrument (flow cytometer) that includes multiple laser light sources, a flow cell, collection lens, optical fibers, and a plurality of detector array clusters as depicted in FIG. 4 below:

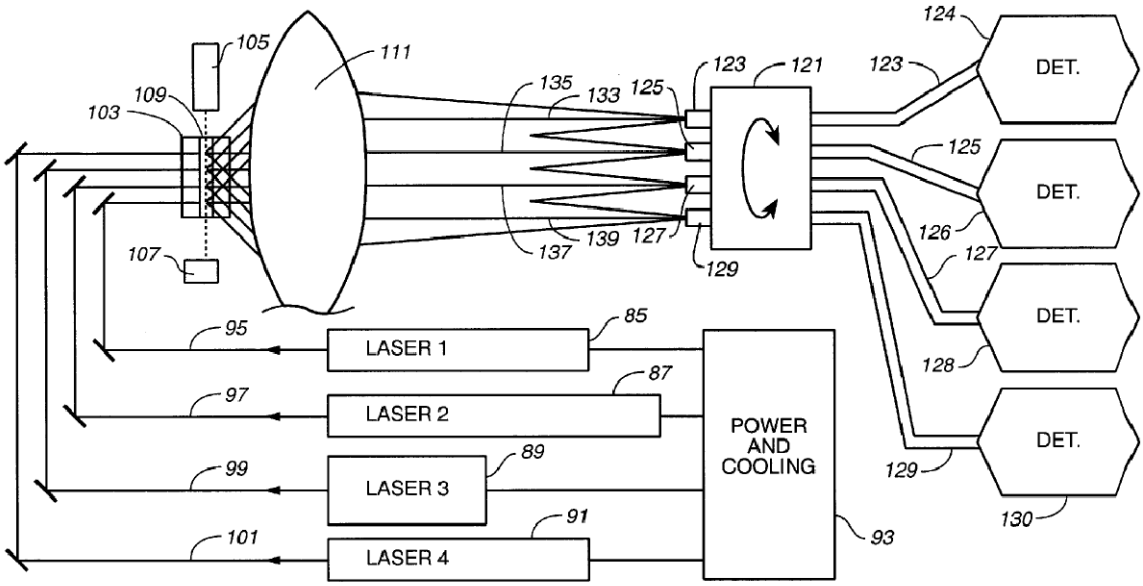

FIG._4

(Oostman, FIG. 4.)

Each of lasers **85**, **87**, **89**, **91** produces a beam of light with a unique wavelength that is directed toward a flow stream **103** in fluid system **105** that contains fluorescent dye-marked particles within a liquid sample. (Oostman, 5:27-33, 5:41-44.) This impinging of the laser beams creates an "illuminated zone." (*Id.*, 5:44-46.)

Scattered and fluorescent light is then "imaged by a lens light collector **111** to four respective optical fibers **123**, **125**, **127** and **129**," each of which is a multimode optical fiber. (Oostman, 5:63-6:7.) Light is then transmitted to a respective detector cluster **124**, **126**, **128**, **130**, which comprises an array of detectors. (*Id.*, 6:26-28.)

"Each array of detectors differentially separates bands of light by filtering, using coatings on beam splitters and lenses, in a known manner." (*Id*., 6:34-36.)

D. Frazier [EX1009]

Frazier **[EX1009]** is a patent filed on February 26, 2010, titled "Fluorescence Detection Instrument with Orthogonal Laser Entry." Frazier qualifies as prior art under pre-AIA §102(b) and AIA § 102(a)(1). Frazier discloses a "detector assembly for analysis of light emitted form [sic] a fluorescent material, an optical alignment assembly for introducing an output beam into a detector array or demultiplexer, and methods of demultiplexing a beam of light into wavelength bands." (Frazier, Abstract.) Frazier also indicates that its detectors can be "various … types of photodetectors, for example, photo avalanche detectors[.]" (*Id.*, 4:19-20.)

XI. CLAIMS 13, 14, AND 17 ARE OBVIOUS UNDER 35 U.S.C. § 103

A. Ground 1: Chandler in View of Goodman Renders Claims 13, 14, and 17 Obvious

1. Motivation to Combine Chandler with Goodman and Reasonable Expectation of Success

A POSA would have found it obvious to combine Chandler's flow cytometers with Goodman's teachings regarding its wavelength division demultiplexer devices. Chandler, as modified by Goodman, would have predictably resulted in the substitution of the branched configuration of Chandler's bandpass filters within its FADC units with Goodman's more modular, efficient, cost-effective demultiplexers

(WDMs) having an optical block. (EX1002, ¶¶109-110.)

Chandler's FADC units have an associated footprint that would have to be managed and/or miniaturized if additional light sources are used to irradiate fluorescence-tagged material. (EX1002, ¶111.) At the same time, Chandler intended to make conventional flow cytometers "small and inexpensive." (Chandler, 3:51-55.) But a POSA would have recognized that Chandler's branched configuration in the FADC units was suboptimal for achieving Chandler's stated goals, particularly where more color separation per light source was desired. (EX1002, ¶111.)

A POSA seeking to reduce the footprint of Chandler's FADC units without sacrificing detection capabilities would naturally have consulted alternate WDM arrangements, including Goodman. (EX1002, ¶112.) Goodman and Chandler are analogous references in the same field of the alleged invention related to fiber optics, aimed at compact modular optical instruments for color separation and detection. (Chandler, 1:11-15, 3:32-35; Goodman, 1:8-12, 3:48-67, 6:19-35.) Chandler and Goodman are directed to the same problems faced by the inventor of efficiently demultiplexing and detecting light, and the '106 patent specifically identifies WDMs in the optical communication industry as analogous to WDMs in flow cytometry. ('106, 4:57-67, 44:39-47.)

A POSA would have been motivated to combine Chandler with Goodman

because Goodman teaches improvements aligned to Chandler's design goals. (EX1002, ¶113.) Goodman explains that its invention is intended to provide a demultiplexer device:

- "in which each optical surface therein can be produced within current standard molding tolerances";
- "in which all surfaces are simple geometric forms and are easily accessible for measurement";
- "that is easy to mold and fabricate accurately";
- "that is easy to handle and assemble due to simple component geometries";
- "that is easy to incorporate into other optical systems"; and
- "is easily scalable or modified."

(Goodman, 3:48-67.) These motivations are confirmed by multiple prior art references. (*See, e.g.*, Oostman, 2:60-64, 3:36-42, 4:14-24, 4:39-45; Frazier, 2:39-46; Wang, 1:65-2:2; Lemoff (EX1012), 2:19-24; He (EX1013), 2:36-38; Grann (EX1015), 2:51-56; Nosu (EX1010), 3:31-52.)

It would have been obvious to try Goodman's demultiplexer device in Chandler's flow cytometer system. Goodman provides a zig-zag pattern in an optical block that was widely accepted in optical communications and had long found adoption within flow cytometry applications. (*See* Section V.B.) Goodman's

WDM configuration was a known alternative to Chandler's branched configuration, and one of several options available to a POSA at the time of the invention. (EX1002, ¶¶114-115; *see* Section V.B.)

A POSA would have had a reasonable expectation that the combination would have been successful. (EX1002, ¶116.) Goodman designed its invention to specifically provide a "demultiplexer device that is easy to incorporate into other optical systems." (Goodman, 3:65-67.) Its demultiplexing devices satisfy this objective by advantageously being "formed with geometrically simple shapes and without complex off-axis surfaces" that "allows for ease of fabrication, ease of metrology, and relatively simple incorporation into more complex optical systems." (*Id.*, 6:19-24.) Chandler also describes that its FADC unit configuration is flexible. (Chandler, 8:25-30, 11:39-67, 12:42-51.) The '106 specification confirms that a WDM from the optical communication industry can be "readily adapted for fluorescence light detection," as such a WDM is "almost identical in function and architecture" to WDMs used in flow cytometry. ('106, 4:57-67, 44:40-47.)

2. Independent Claim 13

a. Claim 13[pre]: "A flow cytometer comprising:"

The parties agree that Claim 13's preamble is limiting. Chandler discloses Claim 13[pre] because its invention is directed to "<u>flow cytometric</u> systems and/or methods of fluorescence measurement." (Chandler, 1:11-15 (underlining added);

see also EX1002, ¶117.) Chandler's FIG. 4 depicts an "improved flow cytometer."

(Chandler, 6:61-62; *see also id.*, 3:56-59.)

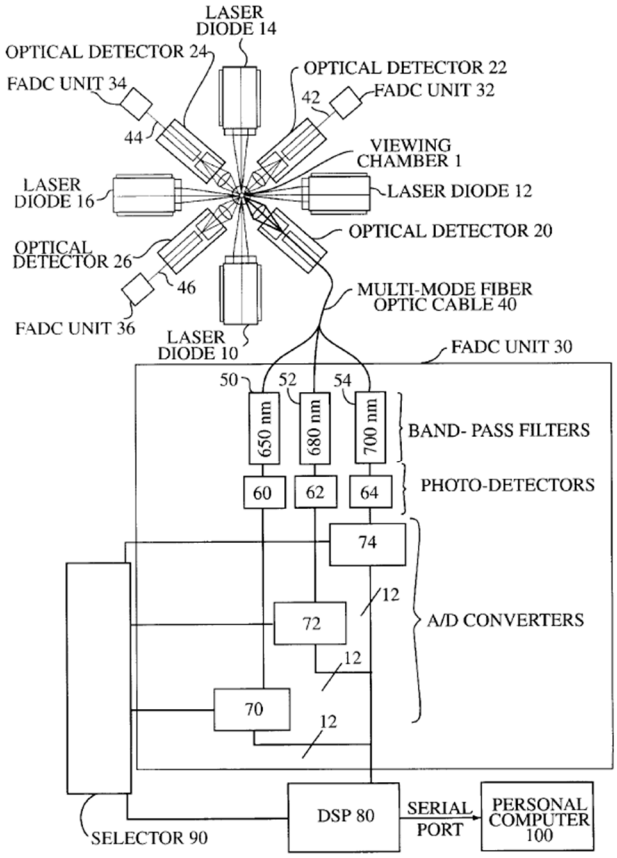

FIG. 4

(Chandler, FIG. 4; EX1002, ¶117.)

b. Claim 13[a]: "a light source arranged to illuminate a stream of particles in a viewing zone;"

Chandler discloses Claim 13[a]. (EX1002, ¶118.) Chandler's "improved flow cytometer" includes "four standard … light emitting sources, **10**, **12**, **14**, **16** [each, "**a light source**"] and four standard optical detectors **20**, **22**, **24**, **26**" surrounding a viewing chamber **1** (i.e., "**viewing zone**") (Chandler, 6:61-62, 7:1-4.)

A flow cell includes a small channel where cells are suspended in a fluid and aligned/focused into a single file as they pass through a spot illuminated by an illumination source (e.g., an arc lamp, laser). (EX1007, p.081; *see also* '106, 27:6-9.) The '106 specification explains, as the "sample flow carrying objects and a sheath flow" passes through the viewing zone, "a light source … illuminat[es] the object in the viewing zone." (*E.g.*, '106, 5:30-33, 7:21, 30:50-53.) Thus, a POSA would have understood that a flow cell is a subcomponent of a flow cytometer that receives a liquid carrying sample particles, and that a "**viewing zone**" is the area of the flow cell where the sample is illuminated. (EX1002, ¶119.)

"[S]ample fluid **120** containing particles of interest are presented" in Chandler's "<u>sample delivery</u> viewing chamber **1**." (Chandler, 6:60-67 (underlining added), 8:61-62.) A "sample is <u>illuminated</u> in a viewing chamber having a plurality of light sources … around the viewing chamber." (*Id*, 4:66-5:2 (underlining added); *see also id.*, Abstract.) Each of Chandler's light emitting sources, **10**, **12**, **14**, **16** (i.e., "**light source**") is "**arranged to illuminate a stream of particles in a viewing zone**," (i.e., viewing chamber **1**). (EX1002, ¶120.)

FIG. 4 shows each of light emitting sources **10**, **12**, **14**, **16** (in orange) illuminating a sample passing through the viewing chamber **1** (in brown):

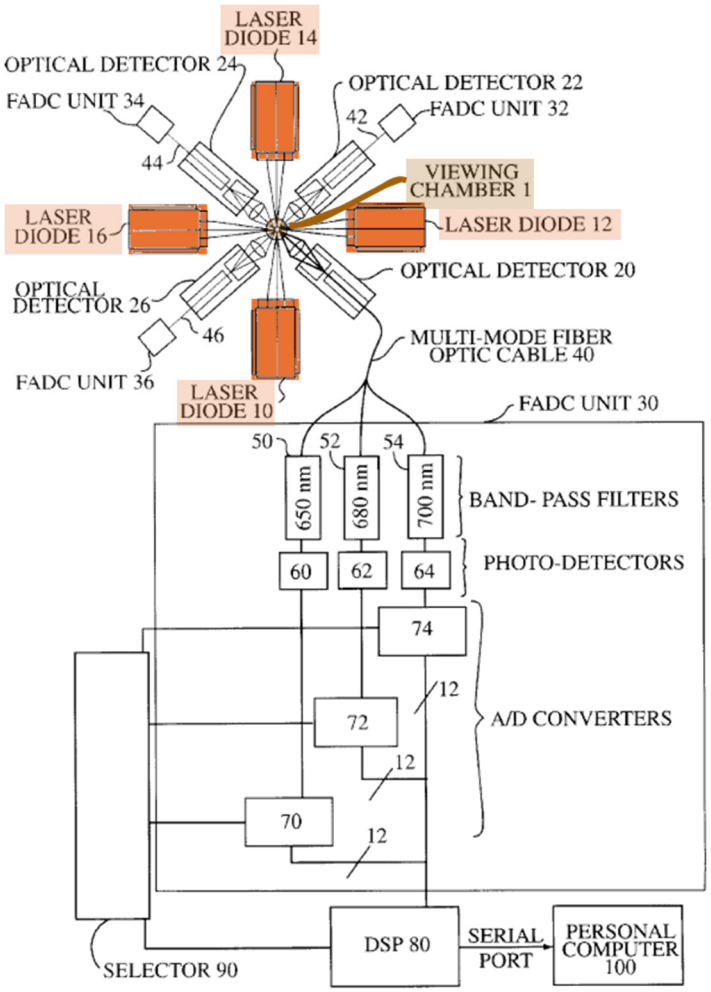

FIG. 4

(Chandler, FIG. 4 (annotated); *see also* EX1002, ¶121.)

c. Claim 13[b]: "a collecting optical element configured to collect and focus fluorescent light emitted by a particle illuminated by the light source such that the fluorescent light leaving the collecting optical element converges; and"

Chandler discloses Claim 13[b]. (EX1002, ¶122.)

A dispute in the pending litigation exists regarding construction of "**collecting optical element**." In the underlying district court litigation, the Court indicated that

"collecting optical element" is subject to means-plus-function. (EX1103, pp.182-183, 192-193.) Patent Owner proposes, if "collecting optical element" is construed as a means-plus-function term, that its function is to "collect and focus fluorescent light emitted by a particle illuminated by the light source such that the fluorescent light leaving the collecting optical element converges." (EX1069, pp.109-111.) Patent Owner states that an "objective" or structural equivalents may qualify as a "collecting optical element" under this alternate construction. (*Id.*) The district court has not addressed this issue, but to streamline the Board's consideration of the prior art, Petitioner for purposes of this Petition only adopts Patent Owner's construction of "**collecting optical element**." *E.g.*, *Glux Visual Effects Tech (Shenzhen) Co. v. Ultravision Techs., LLC*, IPR2020-01052, Paper 28 at 33 (P.T.A.B. Nov. 17, 2021) ("*Western Digital* states, and we agree, that '37 C.F.R.§ [42.]104(b)(3) does not require [a p]etitioner to express its subjective agreement regarding correctness of its proffered claim constructions or to take ownership of those constructions,' such as in a district court proceeding."). Patent Owner contends that its construction is supported by intrinsic evidence. (*See* EX1069, pp.111-112.) Patent Owner has also pointed to extrinsic evidence in support of its position. (*Id.*, p.117.)

Under Patent Owner's construction, Chandler's optical detectors **20**, **22**, **24**, **26** each discloses a "**collecting optical element**." (Chandler, 9:52-55 ("[T]he optical detector **20** <u>gathers photons</u> and can couple or transmit them to a respective

multi-mode fiber optic cable **30**." (underlining added)).) A POSA would have also understood that the lens displayed right before the optical detectors **20**, **22**, **24**, **26** is a part of the "**collecting optical element**," based on the ray trace diagrams that show light converging to a focal point as the light exits the lens, thereby "gathering" and "focusing" the light. (EX1002, ¶123.)

"**Light emitted by a particle illuminated by the light source**" in Chandler is "**fluorescent light**." (EX1002, ¶124.) In Chandler, the light emitted by the particles passing through the viewing zone and illuminated is fluorescent light. (*See* Chandler, 2:61-65, 4:66-5:4; *see also id.*, 5:7-9, 3:32-35, 3:51-55, 3:56-59, 5:3-4.)

Chandler's optical detectors **20**, **22**, **24, 26** are "**configured to collect and focus fluorescent light … such that the fluorescent light leaving the collecting optical element converges**." (EX1002, ¶125.) Whether the light converges, is collimated, or diverges can be illustrated by the nature of resulting light rays emitted from a point source (within the lightbulb) affected by a spherical surface like a lens (gray shading) in different ways:

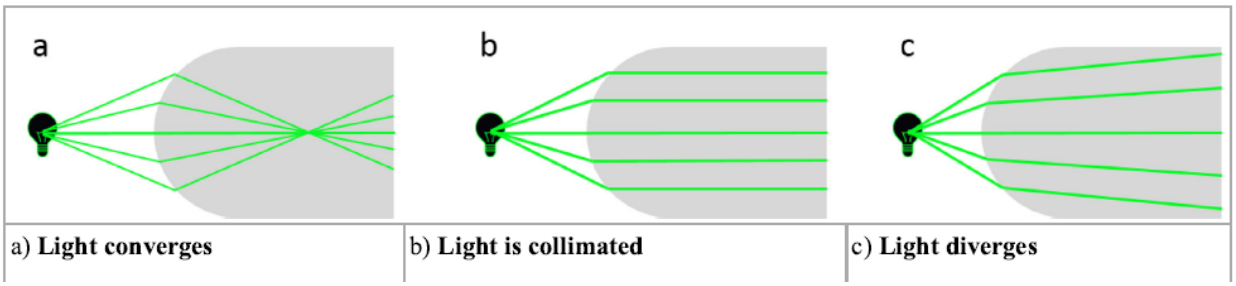

(*See* EX1023, p.005; EX1002, ¶125.) The annotated FIG. 4 shows that the

fluorescent light beam emitted from the particles and passing through the "**collecting optical element**" is converging (in blue):

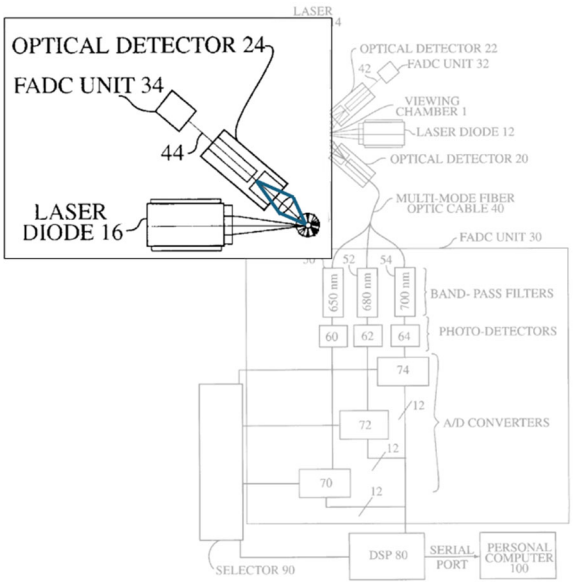

FIG. 4

(Chandler, FIG. 4 (magnified view of optical detector **24**); EX1002, ¶125.) Therefore, a POSA would have understood that the lens in the optical detectors **20**, **22**, **24**, **26** "**collect and focus fluorescent light … such that the fluorescent light leaving the collecting optical element converges**." (EX1002, ¶125.) Further annotated FIG. 4 below shows optical detectors **20**, **22**, **24**, **26**, along with corresponding lenses, (in yellow) gather fluorescent light (in blue) emitted by particles in viewing chamber **1** (in brown):

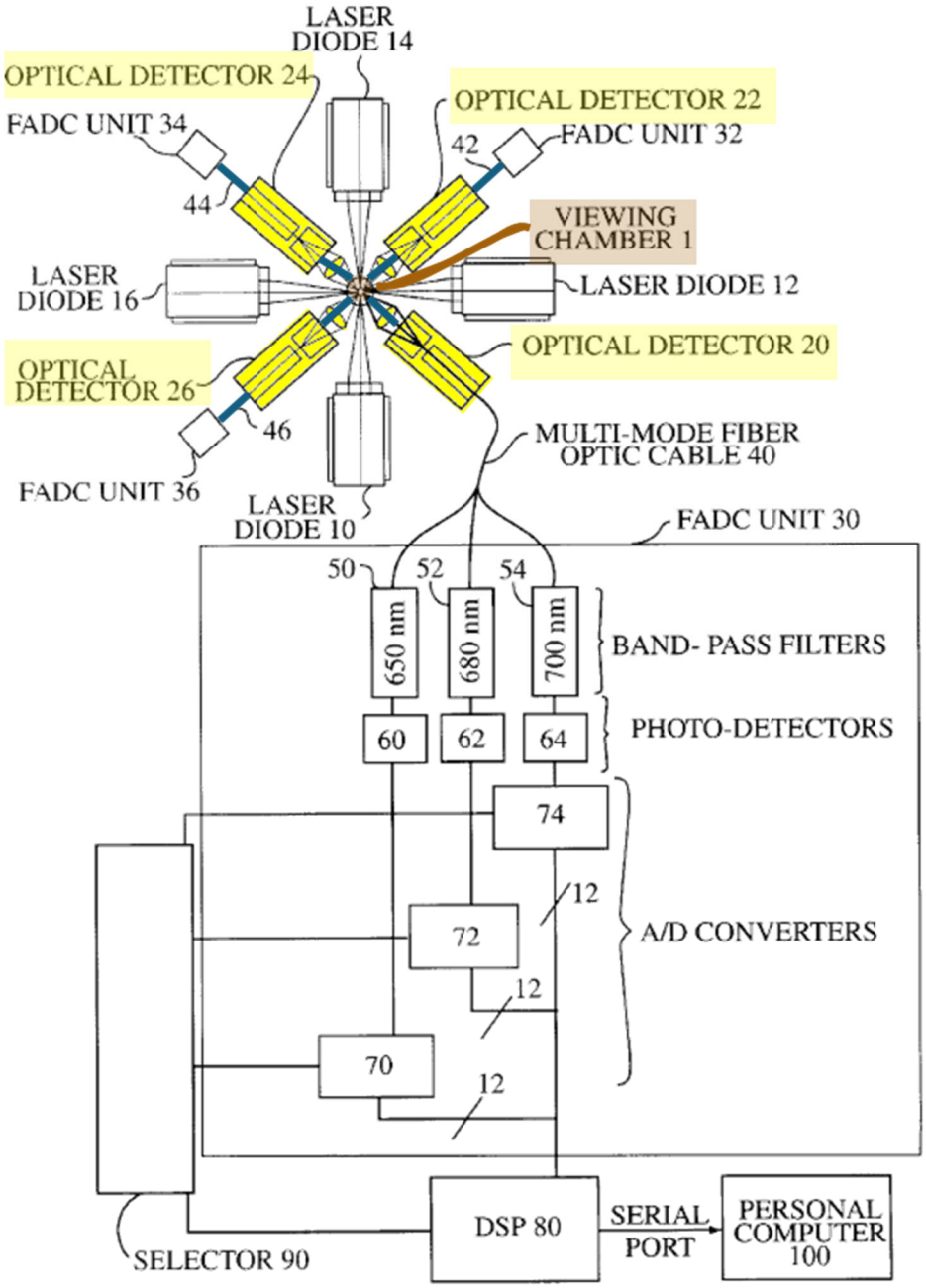

FIG. 4

(Chandler, FIG. 4 (annotated); *see also* EX1002, ¶126.)

d. Claim 13[c]: "a wavelength division multiplexer (WDM) configured to separate into color bands the fluorescent light collected by the collecting optical element, the WDM including,"

The combination of Chandler and Goodman discloses Claim 13[c]. (EX1002, ¶127.) Chandler discloses "**fluorescent light collected by the collecting optical element**" for the same reasons provided for Claim 13[b], which are incorporated here. (*Id.*) Chandler's FADC unit discloses "**a wavelength division multiplexer (WDM)**." (*Id.*) FIG. 4 depicts "four standard laser diodes, or light emitting sources, **10**, **12**, **14**, **16** and four standard optical detectors **20**, **22**, **24**, **26**" surrounding a viewing chamber **1**. (Chandler, 6:61-62, 7:1-4.) Optical detectors **20**, **22**, **24**, **26** are each connected via a multimode fiber optic cable to a "filtering, amplification, and digital conversion (FADC) unit" that includes sets of bandpass filters and photodetectors for color separation and detection. (*Id.*, 7:35-49, 9:35-41, 9:52-61, 11:39-67.) The band-pass filters **50**, **52**, **54** are "centered so as to correspond to the emission wavelength, or <u>band of wavelengths</u>, of an available fluorescent dye associated with an excitation wavelength of a particular laser diode." (*Id.*, 8:6-12 (underlining added).)

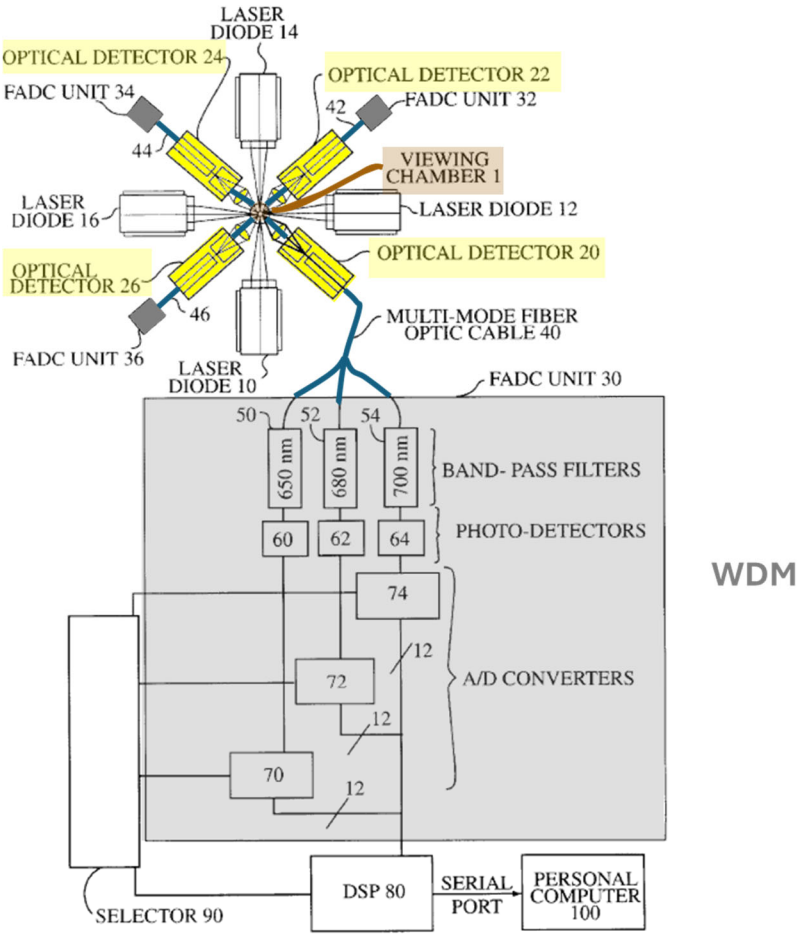

FIG. 4

WDM

(Chandler, FIG. 4 (annotated); EX1002, ¶127.) A POSA would have thus understood that the FADC units are "**configured to separate into color bands the fluorescent light**." (EX1002, ¶127.)

The Chandler-Goodman optical system replaces the branched configuration from Chandler's FADC unit(s) with an alternate, known zig-zag demultiplexing configuration described in Goodman. (EX1002, ¶128.)

e. Claim 13[d]: "a collimating optical element that is separate from the collecting optical element and is arranged to receive the fluorescent light collected by the collecting optical element, the collimating optical element configured to collimate the fluorescent light;"

The combination of Chandler and Goodman discloses Claim 13[d]. (EX1002, ¶129.) In the underlying district court litigation, the Court indicated that "collimating optical element" is subject to means-plus-function. (EX1103, pp.182-183, 192-193.) Patent Owner proposed that "**collimating optical element**" construed as a means-plus-function term performs the functions to "(1) receive light from a light source" and "(2) project a 'collimated beam.'" (EX1069, p.093.) Patent Owner states that a "lens" or structural equivalents may qualify as a "collimating optical element" under this construction. (*Id.*) Goodman's collimating reflector **24***a* is a "**collimating optical element**" under Patent Owner's proposed structure, as Goodman teaches that it can be a collimating lens. (Goodman, 10:17-21; EX1002, ¶130); *see also Glux Visual Effects*, IPR2020-01052, Paper 28 at 33.

Collimating reflector **24***a* is "**separate from the collecting optical element**," as optical detectors **20**, **22**, **24**, **26** constitute the "collecting optical element" (discussed above in Claim 13[b]). (EX1002, ¶131.)

Collimating reflector **24***a* is further "**arranged to receive the fluorescent light collected by the collecting optical element**." (EX1002, ¶132.) Chandler's optical detectors **20**, **22**, **24**, **26** are connected to corresponding FADC units **30**, **32**,

34, **36** via multimode fiber optic cables **40**, **42**, **44**, **46**, respectively:

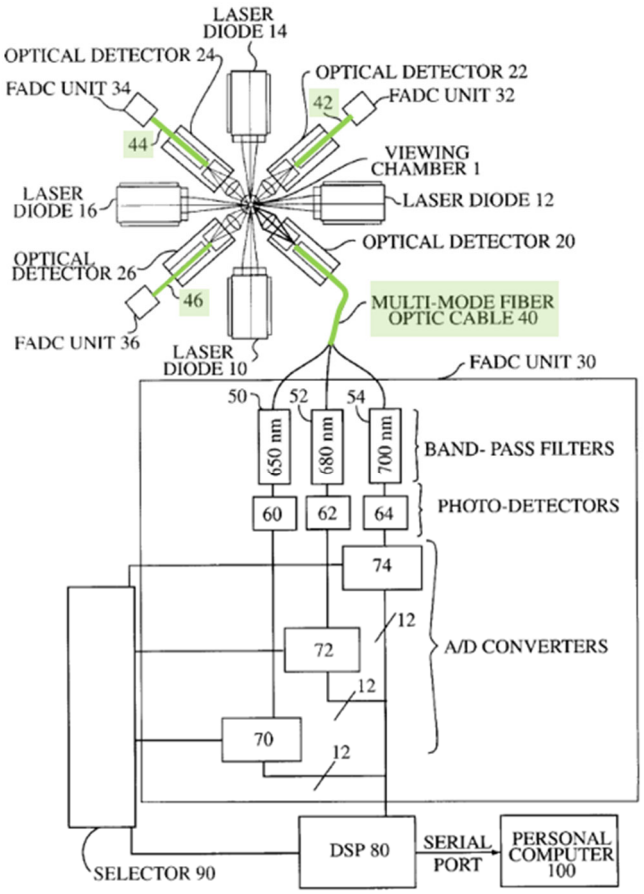

FIG. 4

(Chandler, FIG. 4 (annotated); *see also id.*, 7:35-38, 7:66-8:3; EX1002, ¶132.) Each optical detector **20**, **22**, **24**, **26** "gathers photons and can couple or transmit them to a respective multi-mode fiber optic cable" that "conveys the photons" to a corresponding FADC unit. (Chandler, 9:52-56.)

Goodman similarly teaches that its collimating reflector **24***a* is "**arranged to receive the fluorescent light collected by the collecting optical element**." (EX1002, ¶132.) "[M]ulti-wavelength optical beam **19** is emitted from output end

17 of optical fiber **15**, enters optical block **12**" and impinges upon an imaging optical element **18**. (Goodman, 11:53-55.) The imaging optical element **18** then reflects optical beam **19** onto an imaging optical element **20**, that further reflects the beam to a wavelength selective element **22***a*. (*Id*., 11:56-62.) The wavelength selective element **22***a* passes select wavelengths of the beam and reflects or absorbs the remainder. (*Id*., 12:1-4.) The reflected wavelengths of the beam—"**fluorescent light collected by the collecting optical element**"—are directed to collimating reflector **24***a*. (*Id*., 12:4-5.)

Goodman's collimating reflector **24***a* is also "**configured to collimate the fluorescent light**." (EX1002, ¶134.) A POSA would have known that the nature of a beam of light can be characterized by the rays of light contained within the beam in three different ways—converging, collimated, or diverging. (*Id.*) Shapiro, a textbook cited in the '106 specification (*see* '106, 28:33-37; *id.*, 43:64-67), explains that in a converging beam, the rays get closer together as they travel along; in a collimated beam, the rays are parallel to each other; and in a diverging beam, the rays get farther apart as they travel along. (EX1007, p.110; EX1002, ¶134 & n.8.)

In the underlying district court litigation, Patent Owner contends to "**collimate**" means to "render rays of light more nearly parallel," whereas Petitioner contends it is to "make rays of light that originate from a point on the source parallel to each other and not converging (i.e., focused) or diverging[.]" (EX1069, p.040.)

A beam with parallel rays (as taught in Goodman's FIG. 1) would have been "**collimate**[d]" under either party's understanding of the term's plain meaning. (EX1002, ¶136); *see also Glux Visual Effects*, IPR2020-01052, Paper 28 at 33.

Collimating reflector **24***a* (orange) receives non-collimated light (pointed to by black arrow) exiting from optical fiber **15** because the imaging optical elements that precede collimating reflector **24***a* merely "control the tendency of non-collimated light to diverge." (Goodman, 11:63-66.) Collimating reflector **24***a* can be a collimating lens. (*Id*., 10:17-21.) A POSA would thus have understood from Goodman's disclosures that collimating reflector **24***a* would collimate incident light, thereby "**collimat**[ing] **the fluorescent light**" ultimately received from optical fiber **15** (routed from optical detectors in Chandler's flow cytometer). (EX1002, ¶¶137-138.) This is illustrated in FIG. 1 below:

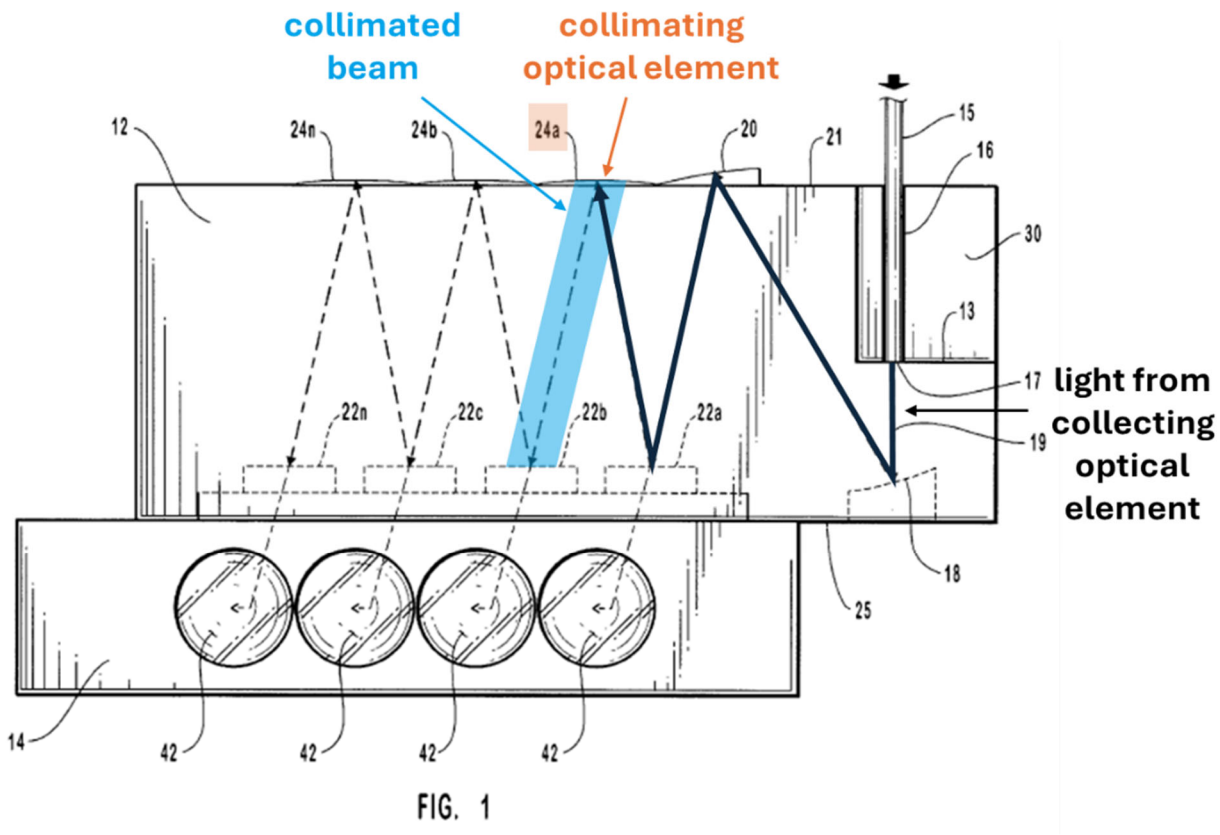

(Goodman, FIG. 1 (annotated); EX1002, ¶138.)

f. Claim 13[e]: "a row of mirrors arranged and configured to sequentially reflect different color bands of the fluorescent light collected by the collecting optical element after the fluorescent light has passed through the collimating optical element,"

The combination of Chandler and Goodman discloses Claim 13[e]. (EX1002, ¶139.) Goodman's "demultiplexer device … generally includes an optically transparent optical block" that "includes … a plurality of relay reflectors[.]" (Goodman, 5:63-6:1; *see also id.*, 4:35-40.) Goodman's "plurality of relay reflectors" is further "positioned on top surface **21** of optical block **12** in a linear

arrangement." (Goodman, 9:58-61.) This plurality of relay reflectors, collimating reflectors **24***b*-**24***n*, is a "**row of mirrors**." (EX1002, ¶139.) Goodman teaches these reflectors can be collimating mirrors. (Goodman, 10:17-21.)

These mirrors are configured to "**sequentially reflect different color bands of the fluorescent light**." (EX1002, ¶140.) Goodman further explains that "[i]ncident light on reflector **24***b* is relayed to wavelength selective element **22***c*, which transmits its preselected wavelengths and reflects the remainder to reflector **24***n*, which reflects the light to the final wavelength selective element **22***n*." (Goodman, 12:4-12 (underlining added).) Therefore, a POSA would have understood that collimating reflectors **24***b*-**24***n* "**sequentially reflect different color bands of the fluorescent light**." (EX1002, ¶140.) A POSA would have understood that the use of "n" notation signals that a POSA could use any number of reflectors and that the reflectors will continue to "**sequentially reflect different color bands of the fluorescent light**." (*Id.*; *see also* Goodman, 12:12-15.) The annotated FIG. 1 below shows Goodman's "**row of mirrors**" (in green) "**sequentially reflect**[ing] **different color bands** [(dark green, red)] **of the fluorescent light**":

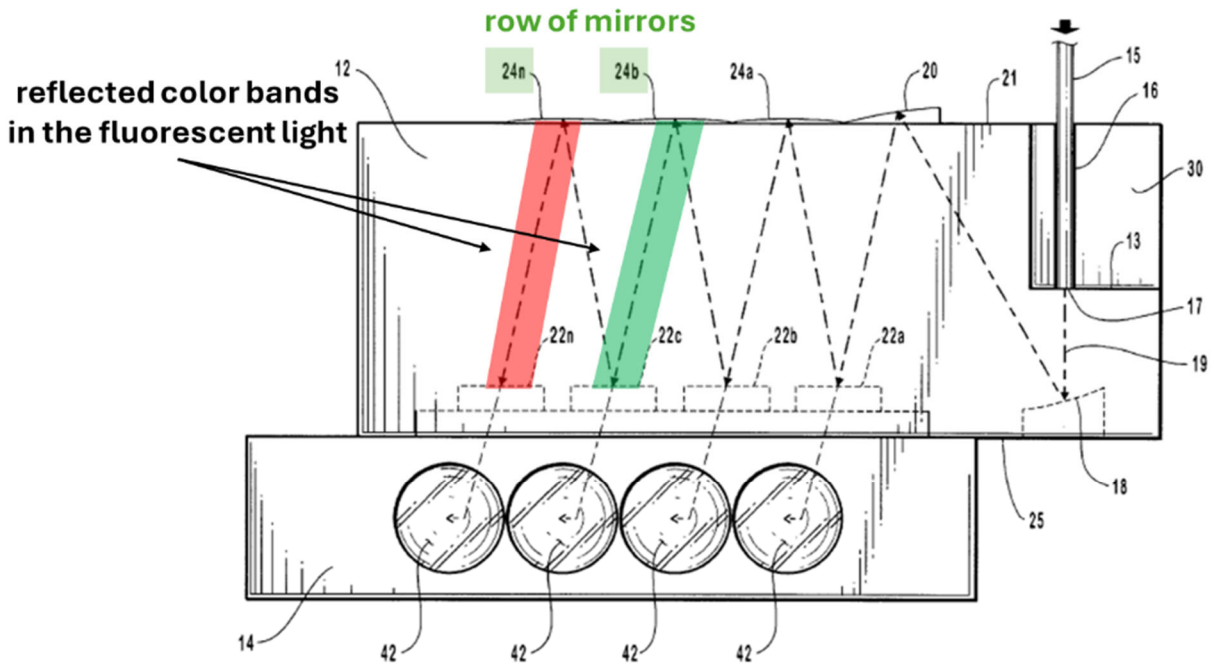

FIG. 1

(Goodman, FIG. 1 (annotated); EX1002, ¶140.)

The fluorescent light initially reflected at collimating reflector **24***b* is "**collected by the collecting optical element after the fluorescent light has passed through the collimating optical element**." Collimating reflector **24***a* receives fluorescent light collected by Chandler's optical detector and transported through an optical fiber into Goodman's WDM device, as described in Claim 13[d]. (EX1002, ¶141.) A collimated fluorescent beam (in blue) from collimating reflector **24***a* is directed "towards wavelength selective element **22***b*, which in turn passes a selected band of wavelengths and reflects the remainder [(in green)] to a subsequent reflector **24***b* [(in green)]." (Goodman, 12:4-8.)

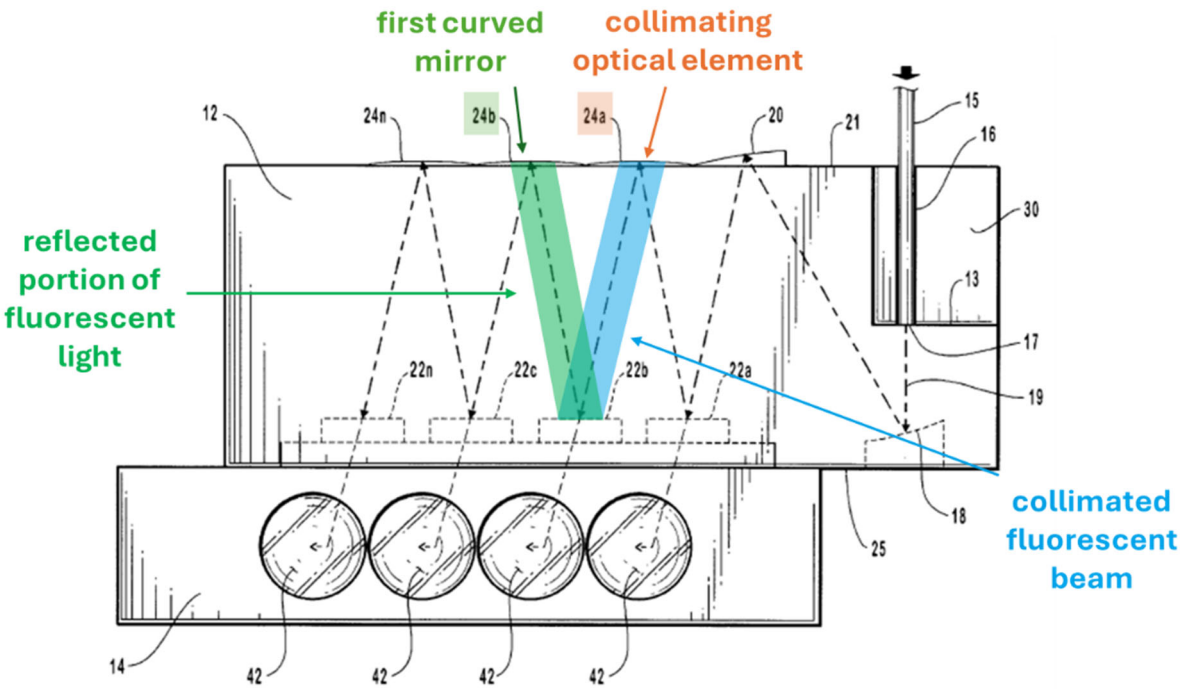

FIG. 1

(Goodman, FIG. 1 (annotated).)

g. Claim 13[f]: "the row of mirrors including at least one curved mirror;"

Goodman discloses Claim 13[f]. Goodman's collimating reflectors **24***b*-**24***n* "can be … collimating lenses or mirrors[.]" (Goodman, 10:19-23 (underlining added).) A POSA would have understood a collimating mirror is a "**curved mirror**." (EX1002, ¶142.) FIG. 1 depicts collimating reflector **24***b*-**24***n* with a curved, reflective surface. (*Id.*)

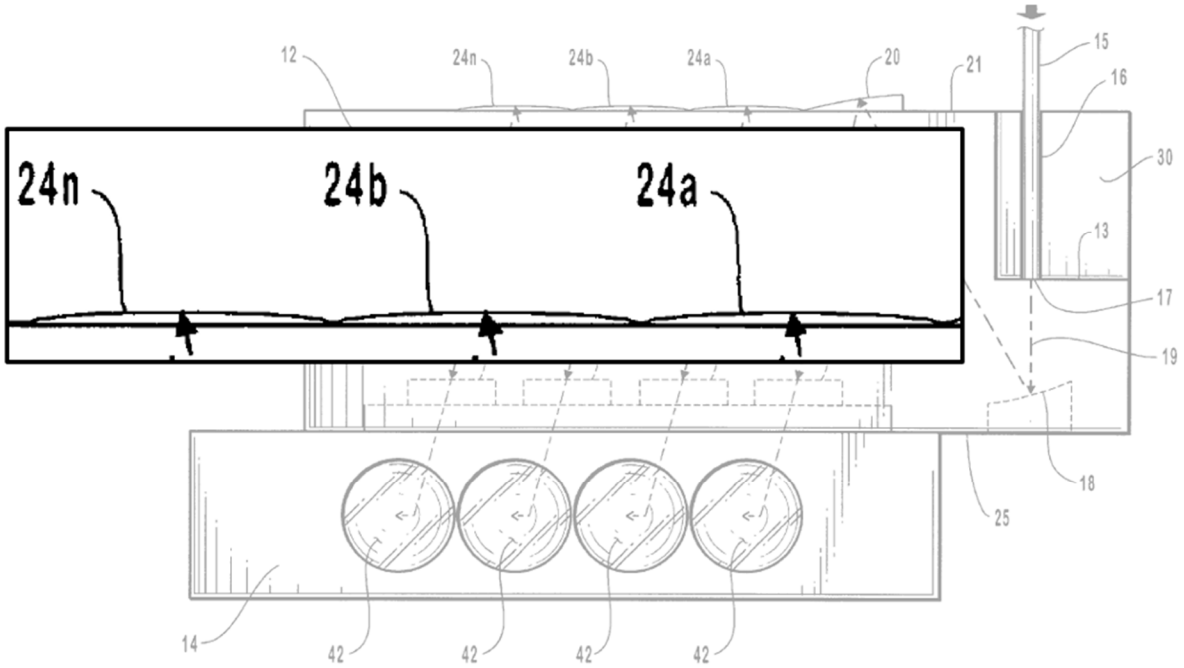

FIG. 1

(Goodman, FIG. 1 (magnified view of collimating reflector **24***b*-**24***n*).)

h. Claim 13[g]: "a row of dichroic filters opposed to the row of mirrors, each of the dichroic filters configured to pass one color band of the fluorescent light reflected by a mirror in the row of mirrors, and to reflect another color band of the fluorescent light reflected by the mirror;"

The combination of Chandler and Goodman discloses Claim 13[g]. Each of Goodman's wavelength selective elements is a "**dichroic filter**." (*See* Goodman, 9:38-40; *see also id.*, 5:63-67; EX1002, ¶143.) A POSA would have understood that a function of a dichroic filter is to pass a selected range of wavelengths as described in Goodman. (*See* Goodman, 6:12-16, 8:21-26; *see also* EX1002, ¶143.)

Goodman also discloses "**a row of dichroic filters opposed to the row of**

mirrors." (EX1002, ¶144.) Goodman's "demultiplexer device … generally includes an optically transparent optical block" that "includes a plurality of wavelength selective elements such as optical interference filters[.]" (Goodman, 5:63-67; *see also id.*, 4:35-40.) Goodman's "reflectors are positioned opposite from the wavelength selective elements such that each of the reflectors … directs the beam of optical energy from one wavelength selective filter to an adjacent wavelength selective filter." (Goodman, 4:53-58 (underlining added).) As explained in Claim 13[f], collimating reflectors **24***b*-**24***n* is the "**row of mirrors**." It follows that wavelength selective element **22***c*-**22***n*, "**opposed to the row of mirrors**," comprises a "**row of dichroic filters**." (EX1002, ¶144.) Additionally, Goodman's "filters are configured in a serial arrangement along a lower portion of optical block **12**" and preferably "arranged in a linear array[.]" (Goodman, 8:16-19.)

Goodman further discloses "**each of the dichroic filters configured to pass one color band of the fluorescent light reflected by a mirror in the row of mirrors**."[2] Each of Goodman's wavelength selective elements **22***c*-**22***n* is "capable of transmitting a selected range of wavelengths within beam **19** and reflecting other wavelengths." (Goodman, 8:21-26 (underlining added); *see also id.*, 6:12-19.) A

[2] Chandler teaches use of fluorescent light, as Goodman is adapted for use in Chandler's flow cytometer in my proposed combination.

POSA would have understood these disclosures to mean that each wavelength selective element passes a "**one color band of the fluorescent light**" (i.e., a range of wavelengths of light) from the incident collimated beam to a corresponding and optically coupled focusing lens **42**. (*See id.*, 8:28-36; EX1002, ¶145.) Wavelength selective elements **22***c*-**22***n* receive fluorescent light reflected by one of collimating reflectors **24***b*-**24***n*. (*See* Goodman, 12:1-15.)

For the same reason, Goodman also discloses "**each of the dichroic filters configured** … **to reflect another color band of the fluorescent light**." (EX1002, ¶146.) Reflected wavelengths are directed to a reflector in reflectors **24***b*-**24***n*. (*See* Goodman, 12:1-15.)

Annotated FIG. 1 shows "**a row of dichroic filters**" (in beige), "**opposed to the row of mirrors**," each filter, "**configured to pass one color band of the fluorescent light**," (in light green and light red), and "**to reflect another color band**," (in dark red). A POSA would have understood that the use of "n" notation signals that a POSA could use any number of wavelength selective elements and that the wavelength selective elements will continue to separate the fluorescent light and selectively pass or reflect the preselected color bands. (EX1002, ¶147; *see also* Goodman, 12:12-15.)

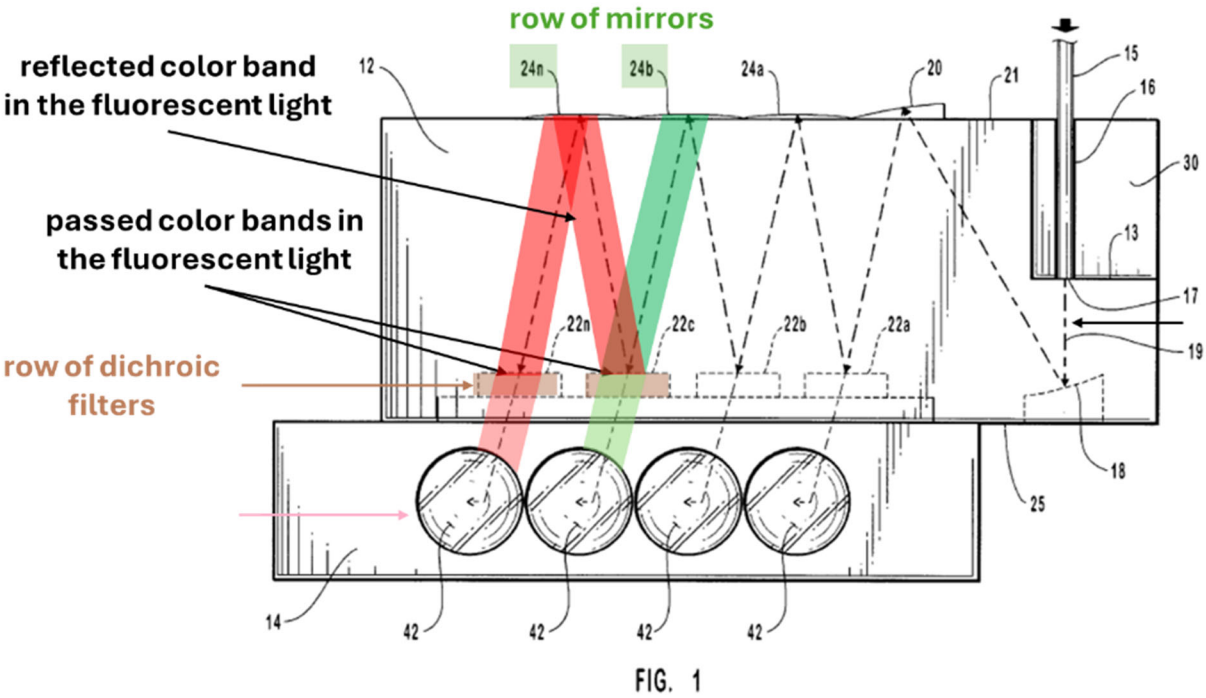

(Goodman, FIG. 1 (annotated); *see also* EX1002, ¶147.)

i. Claim 13[h]: "a row of semiconductor detectors, each of the semiconductor detectors arranged and configured to detect and quantitate the band of fluorescent light passing through a dichroic filter in the row of dichroic filters."

The combination of Chandler and Goodman discloses "**a row of semiconductor detectors**." (EX1002, ¶148.) Whereas Goodman generally teaches that each of its focusing lenses **42** may "focus a selected wavelength beam onto a corresponding optical receiver such as an optical detector," (Goodman, 11:40-42), Goodman does not disclose whether its optical detector is a "**semiconductor detector**" or not. Chandler fills in these implementation details, teaching an "amplifying photo-detector" within its FADC unit that may be "an avalanche photo-

diode." (Chandler, 3:66-4:8, 5:24-32, 8:31-34.) A POSA would have understood an avalanche photodiode ("APD") detector to be a "**semiconductor detector**." (EX1002, ¶148; *see also* '106, 46:62-64.)

Goodman's optical block **12**, coupled to a beam-directing member **14**, directs and focuses transmitted portions of light from the set of wavelength selective elements **22***a*-**22***n* (*i.e.*, filters) into a corresponding set of optical detectors. (EX1002, ¶149.) As explained above in Claim 13[g], that wavelength selective elements **22***c*-**22***n* comprises a "**row of dichroic filters**." The semiconductor detectors optically coupled (by way of focusing lenses **42**) to the "**row of dichroic filters**" are a "**row of semiconductor detectors**." (EX1002, ¶149; Goodman, 11:8-12, 11:24-30, 11:40-44, 12:56-58.)

The "**row of semiconductor detectors**" in the combined Chandler-Goodman WDM are the semiconductor detectors that would be the "optical detectors" associated with a set of focusing lenses **42** that are optically coupled to wavelength selective elements **22***c*-**22***n*. (EX1002, ¶150.) "[E]mitted wavelength beams" propagating from wavelength selective elements **22***a*-**22***n* may be "transmitted to the focusing lenses" and then "[e]ach of lenses **42** can focus a selected wavelength beam onto a corresponding optical receiver such as an optical detector," (i.e., "**semiconductor detectors**"). (Goodman, 11:24-30, 11:40-42.)

Annotated FIG. 1 shows each semiconductor detector in the "**row of**

semiconductor detectors" receiving a band of fluorescent light (in light green and light red), passing through a dichroic filter in the row of dichroic filters:

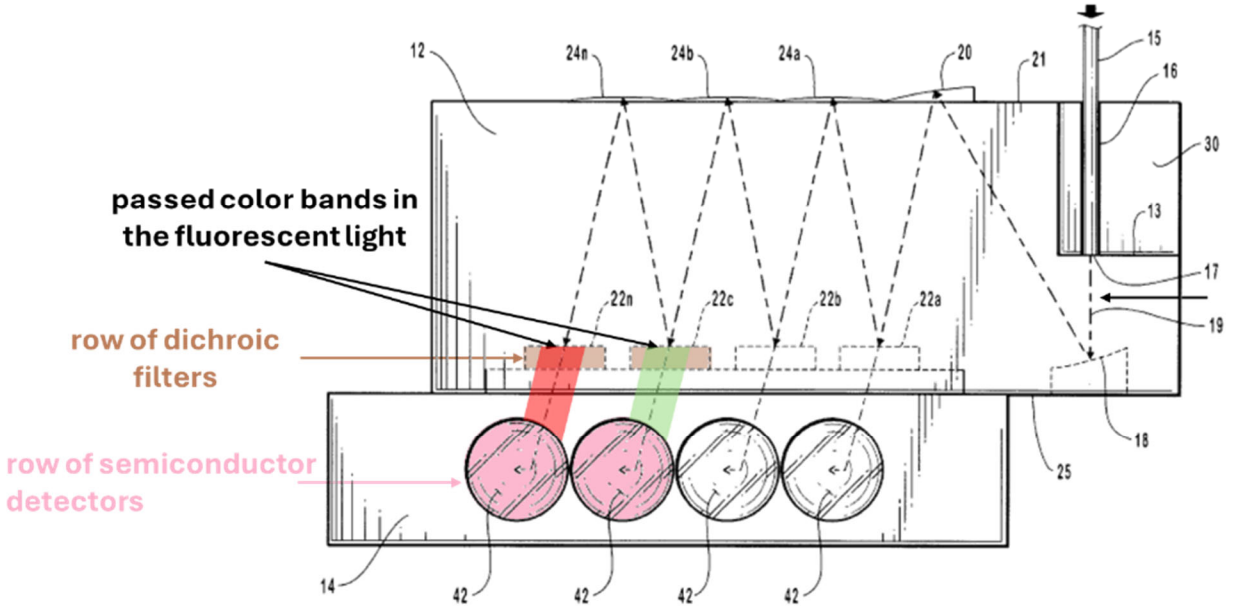

FIG. 1

(Goodman, FIG. 1 (annotated); *see also* EX1002, ¶151.)

A POSA would have understood that "**each of the semiconductor detectors**" in the Chandler-Goodman WDM is "**arranged and configured to detect and quantitate the band of fluorescent light passing through a dichroic filter in the row of dichroic filters**." (EX1002, ¶152.) While the specification does not describe or define "quantitate," a POSA would have understood that it describes the detector's ability to quantify the incident photons as an analog signal to be digitized for computer processing. (*See, e.g.*, EX1079, p.003 (defining "quantitate" as to "determine the quantity or extent of"); EX1002, ¶152.) Chandler's APDs

"quantitate" the received light, as "[a]n analog-to-digital converter is optionally connected to the photo-detector," "[a] digital signal processor may be connected to the analog-to-digital converter," and "[f]luorescence levels for [] each digitized signal are determined by using … the digital signal processor." (Chandler, 4:55-61, 5:34-42 (underlining added); *see also id.*, 4:9-15, 4:16-26, 5:32-33.)

The light received by the focusing lens **42** (optically coupled to wavelength selective element **22***c*-**22***n*) and focused onto the first semiconductor detector is "**a band of fluorescent light**." (EX1002, ¶153.) "Selected wavelength bands … pass into beam-directing member **14**" and are eventually "redirected towards focusing lenses **42**." (Goodman, 11:8-12; *see also id.*, 11:24-30.) The passed portions are each a wavelength range from a collimated beam that passed through a wavelength selective element instead of being reflected to the next sequential collimating reflector. (EX1002, ¶153.)

3. Claim 14: "The flow cytometer of claim 13, further comprising a row of focusing optical elements, each of the focusing optical elements in the row arranged and configured to focus the band of fluorescent light passing through a dichroic filter in the row of dichroic filters onto the corresponding semiconductor detector."

The combination of Goodman and Chandler discloses Claim 14. (EX1002, ¶154.) Goodman's beam-directing member includes a set of focusing lenses **42** that a POSA would have understood to be a "**a row of focusing optical elements**."

(EX1002, ¶155.) "[E]mitted wavelength beams" propagating from wavelength selective elements **22***a*-**22***n* may be "transmitted to the focusing lenses." (Goodman, 11:24-30.) As explained for Claim 13[h], this set of focusing lenses **42** receives the portion of the fluorescent light that passed through each wavelength selective element in the row of wavelength selective elements (i.e., "**row of dichroic filters**"). Goodman's focusing lens **42** can "**focus**" this portion of the collimated beam "onto a corresponding optical receiver such as an optical detector[,]" i.e., Chandler's avalanche photodiode ("**semiconductor detector**"). (*Id.*, 11:40-42.) The beam-directing member is shown below with focusing lenses **42** (pink) that receive wavelength portions of a collimated beam passing through wavelength selective elements **22***c*-**22***n*:

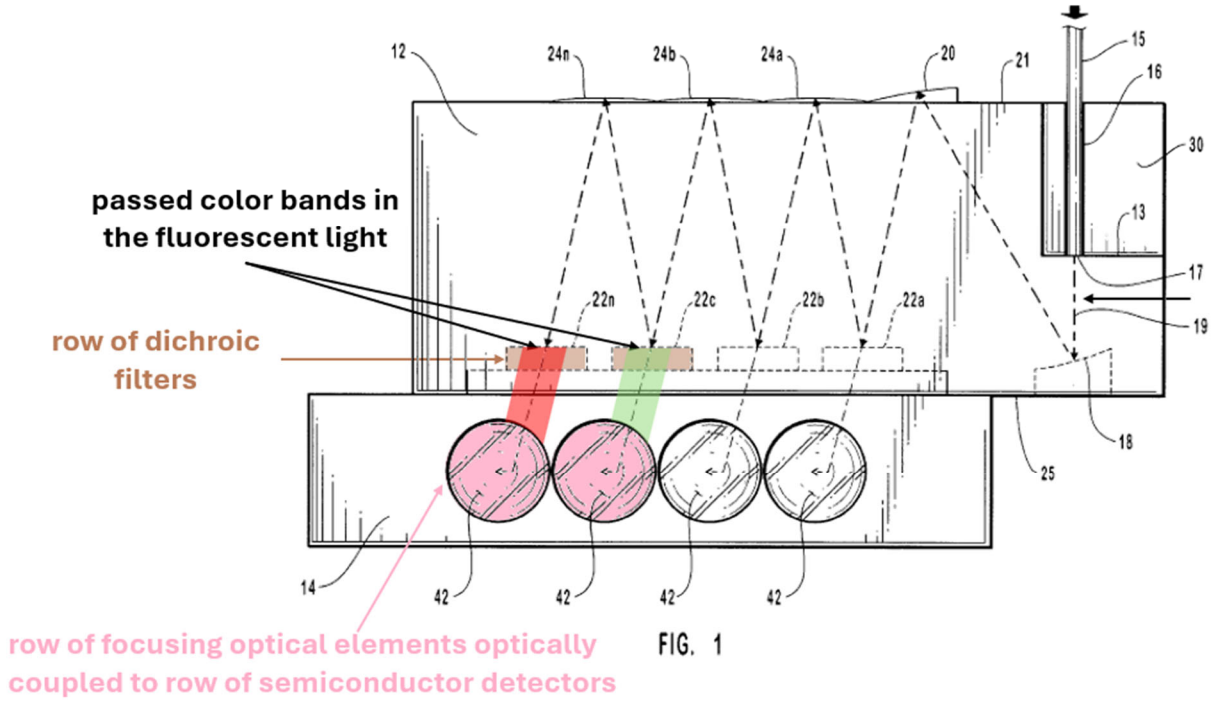

FIG. 1

(Goodman, FIG. 1 (annotated); *id*., 4:59-63; EX1002, ¶155.)

The parties offered competing corresponding structures for the means-plus-function term "**focusing optical element**." Petitioner has identified as corresponding structure a "focusing lens that is of a size that captures all light rays of the at least a portion of a 'collimated beam.'" (EX1069, pp.121-123.) Patent Owner argues that "focusing optical element" is a "lens and structural equivalents thereof." (*Id*.)

Goodman's focusing lens **42** discloses corresponding structure for "**focusing optical element**" under either party's construction. (EX1002, ¶157.) Each focusing lens **42** is a "lens" and a POSA would have understood that these focusing lenses are of the same or larger size than the collimating reflectors **24***a*-**24***n* and gather all light received through the wavelength selective elements to focus it into the optical detectors. (*Id.*) FIG. 1 depicts how a focusing lens has an approximately equal diameter to a corresponding reflector:

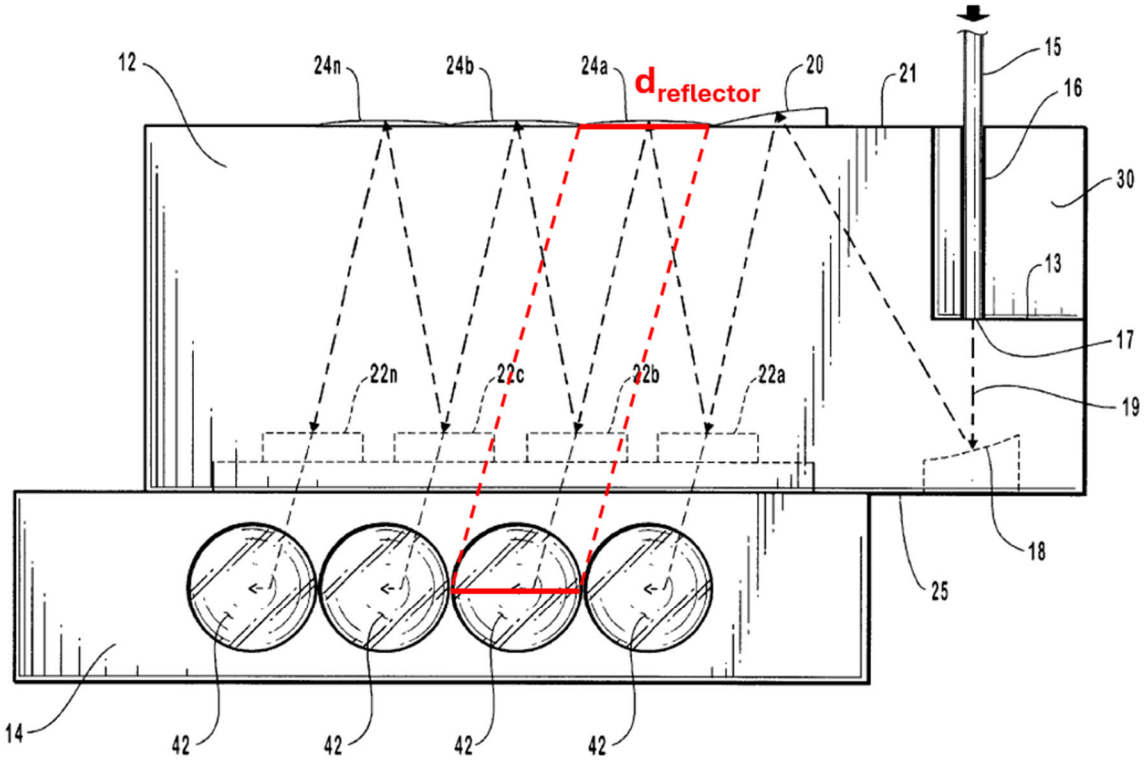

FIG. 1

$d_{reflector} \cong d_{focusing\ lens}$

(Goodman, FIG. 1 (annotated); EX1002, ¶157.)

4. Claim 17: "The flow cytometer of claim 13, wherein the row of mirrors and row of dichroic filters are arranged such that fluorescent light received by the WDM is reflected back and forth between the row of mirrors and the row of dichroic filters in a zig-zag pattern."

The combination of Goodman and Chandler discloses Claim 17. (EX1002, ¶158.) Goodman expressly describes an optical configuration between its set of filters and mirrors as a "zig-zag pattern":

> During operation of a demultiplexer device of the invention, a multi-channel optical energy beam is directed

> into the transparent optical block and onto the afocal relay system, <u>which directs the beam along a predetermined optical path between the wavelength selective elements and reflectors in a zigzag pattern</u>.

(Goodman, 6:5-19 (underlining added).) The FIG. 1 embodiment depicts that the light beam's optical path (in red) is a "**zig-zag pattern**" between "**the row of mirrors**" and "**the row of dichroic filters**":

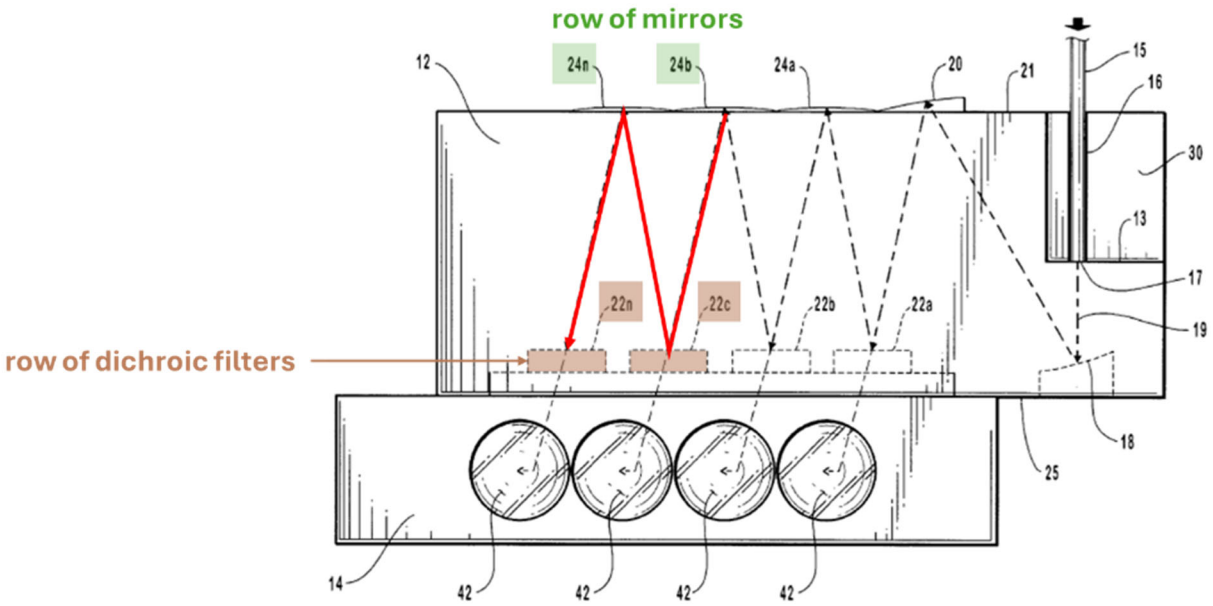

FIG. 1

(Goodman, FIG. 1 (annotated); EX1002, ¶159.) Goodman's "reflectors are located and shaped to produce the desired spatial and angular characteristics of a beam that propagates in a <u>zigzag fashion between the wavelength selective elements and the reflectors</u>." (Goodman, 10:3-7 (underlining added).)

B. Ground 2: Oostman in View of Goodman and Frazier Renders Claims 13, 14, and 17 Obvious

1. Motivation to Combine Oostman with Goodman and Reasonable Expectation of Success

A POSA would have found it obvious to combine Oostman's flow cytometers with Goodman's teachings regarding its wavelength division (de)multiplexer devices. (EX1002, ¶160.) Oostman, as modified by Goodman, would have predictably resulted in the substitution of Oostman's detector array cluster arrangements with Goodman's more modular, compact, and efficient optical block demultiplexers that included Oostman's collimating lens.

A POSA would have been motivated to combine Oostman's flow cytometers with Goodman's teachings regarding its modular, efficient, cost-effective optical block demultiplexers. (EX1002, ¶160.) Oostman and Goodman both identified and proposed a solution for the same problem, which is to develop a WDM device that is compact and cost-effective, and at the same time, capable of separating colors and detecting light over a wide range of wavelengths. (Oostman, 2:60-64, 3:39-41, 3:53-55, 4:14-16; Goodman, 1:8-12; EX1002, ¶¶161-163.) Further, a POSA would have been motivated to combine Oostman's teachings with the teachings of Goodman regarding an optical block. Optical alignment is critical to WDM operation, particularly in Oostman's non-integrated designs where light propagates through air and optical components are oriented/fixated through holders. (Oostman, 8:48-59,

FIGs. 9-11.) Optical alignment and calibration were known technical challenges that practitioners actively attempted to solve in flow cytometer applications. (*See, e.g.*, EX1030, pp.013-014; EX1007, p.089; EX1002, ¶162.)

Oostman and Goodman are analogous references in the same fields of the alleged invention related to optical fibers and, more particularly, modular optical instruments for color separation and detection. (Oostman, 1:8-12, 5:34-40; Goodman, 1:8-12, 3:48-67, 6:19-35; *see also, e.g.*, '106, 2:40; *see* EX1002, ¶163.) Other prior art references discussed in the motivation to combine analysis for Ground 1 confirm this motivation to develop such a device. (EX1002, ¶164.) The combined Oostman-Goodman device would have resulted in a flow cytometer with the zig-zag WDM configuration by substituting Oostman's polygonal WDMs with Goodman's more modular, efficient, cost-effective zig-zag WDM. (EX1002, ¶¶163-167.)

Lastly, a POSA would have had a reasonable expectation that the combination would have been successful given that both Goodman and Oostman disclosed that their configurations are adaptable. (Oostman, 3:39-41, 4:44-45; Goodman, 3:65-67, 6:19-24; *see also, e.g.*, '106, 4:57-67, 44:39-47; EX1002, ¶¶161, 168.) The '106 specification confirms that a WDM from the optical communication industry can be "readily adapted for fluorescence light detection," as such a WDM is "almost identical in function and architecture" to WDMs used in flow cytometry. ('106,

4:57-67, 44:39-47.)

2. Motivation to Combine Oostman and Goodman with Frazier and Reasonable Expectation of Success

A POSA would have been motivated to combine the Oostman-Goodman optical subsystem with Frazier's teachings on the use of APDs within its WDM to further reduce footprint of a flow cytometer while expanding color separation and increasing detection sensitivity capabilities. (EX1002, ¶169.)

Oostman, Goodman, and Frazier are analogous references in the same field as the alleged invention related to wavelength division demultiplexing, fluorescence detection, and/or flow cytometry. (*See, e.g.*, Oostman, 1:8-12, 5:34-40; Goodman, 1:8-12, 3:48-67, 6:19-35; Frazier, Abstract, 1:15-20, 4:5-13.) Frazier discloses a zig-zag WDM configuration similar to Goodman's, albeit with a central boulevard design. (*Compare, e.g.*, Frazier, FIG. 1, *with* Goodman, FIG. 1.) (EX1002, ¶170.)

A POSA would have understood the benefits of using APDs (*see* Section V.C) in developing a more compact flow cytometer with expanded color separation and more sensitive detection capabilities. (EX1002, ¶171.) A POSA would have further found these technical features of APDs to be highly desirable over PMTs, including because APDs are significantly smaller than larger PMTs with bulkier housings. (EX1035, 6:10-13; EX1037, p.009; EX1036, pp.003, 006; EX1038, p.010; EX1039, p.002; EX1032, p.001; *see also* EX1060, EX1061, EX1062; EX1002, ¶171.)

Given the well-known benefits of APDs in flow cytometers and the existing commercially-available flow cytometers using APDs by 2011 and later, a POSA would have had a reasonable expectation of success that APDs could be used in the Oostman-Goodman WDM. (EX1002, ¶172; *see also* Chandler, 5:29-31.) With relative ease, researchers in the field had already demonstrated that PMTs can be successfully substituted with APDs in a commercial system (LSR-II) that embodied Oostman's polygonal arrangement. (EX1036, p.006; EX1002, ¶172.)

A POSA would not have anticipated any additional technical hurdles from implementing APDs, as opposed to using bulkier PMTs with Goodman's zig-zag WDM configuration in the Oostman flow cytometer system. Frazier's zig-zag WDM configuration is substantively similar to Goodman's zig-zag WDM configuration and discloses use of APDs. And, as discussed in Section V.C, skilled artisans had already long since resolved the technical issues that early APD adopters had encountered when using APDs in flow cytometry applications (e.g., temperature dependence, preamplification, high dark current). (EX1002, ¶¶172-173.)

3. Independent Claim 13

(a) Claim 13[pre]: "A flow cytometer comprising:"

The parties agree that Claim 13's preamble is limiting. Oostman discloses Claim 13[pre]. (EX1002, ¶174.) The '106 specification acknowledges that Oostman discloses a WDM for a flow cytometer, albeit in at least a star configuration. (*See*

'106, 5:18-27.) Oostman describes how its "preferred embodiment features a flow cytometer" that is "illustrative of instruments which employ fluorescence detection and color separation." (Oostman, 5:34-37.)

(b) Claim 13[a]: "a light source arranged to illuminate a stream of particles in a viewing zone;"

Oostman discloses Claim 13[a]. (EX1002, ¶175.) Oostman describes "**a light source**" with respect to its FIG. 4 as "a first laser **85**, a second laser **87**, a third laser **89**, and a fourth laser **91**" that "all produce light with unique wavelength profiles[.]" (Oostman, 5:28-30.) "Light of different colors intersects the flow stream **103** and interacts with fluid sample." (*Id*., 5:58-61.) Therefore, each laser **85**, **87**, **89**, **91** is also "**arranged to illuminate a stream of particles in a viewing zone**." (EX1002, ¶175.)

Oostman discloses a "**stream of particles in a viewing zone**." (EX1002, ¶176.) Oostman's "fluidic system **105**" that "feeds tagged target liquid substances into a stream **103**" includes a flow channel **109** (in pink) that allows passage of "**stream of particles**" (in red) via flow stream **103** (in orange). (Oostman, 5:41-42; *see also id*., 4:25-30, 5:42-44, 5:58-61.)

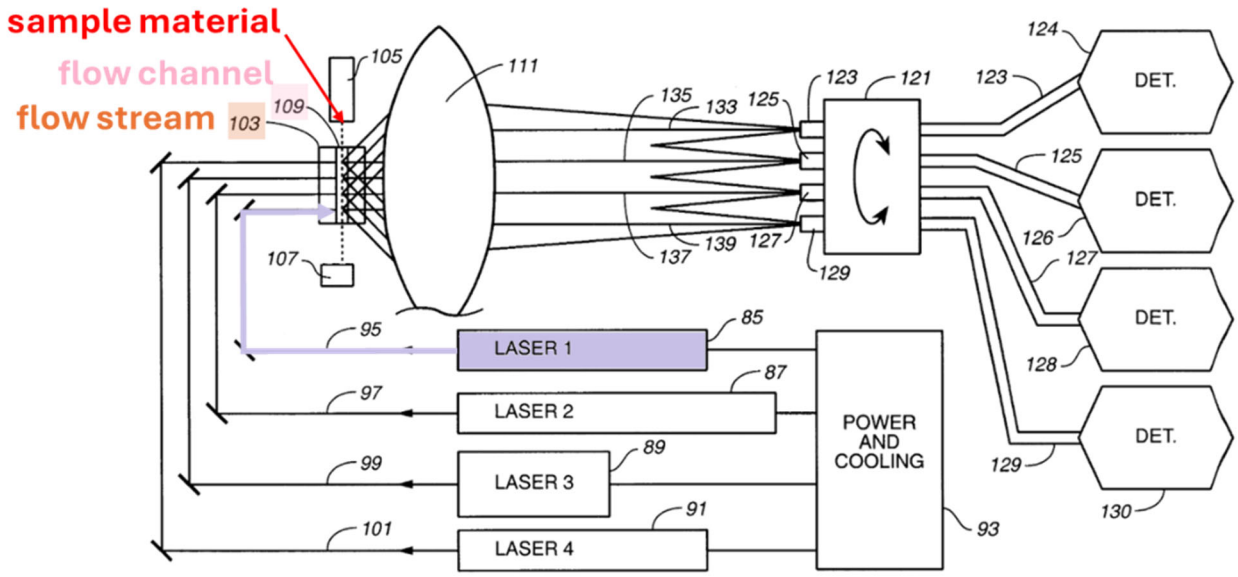

FIG._4

(Oostman, FIG. 4 (annotated); EX1002, ¶176.)

(c) Claim 13[b]: "a collecting optical element configured to collect and focus fluorescent light emitted by a particle illuminated by the light source such that the fluorescent light leaving the collecting optical element converges; and"

Oostman discloses Claim 13[b]. (EX1002, ¶177.) Oostman's light collector **111**, an objective lens, is intended to capture fluorescent light that is caused by light intersecting the flow stream **103** and interacting with fluid samples. (Oostman, 6:9-10; *see also id.*, 5:58-61, 5:63-65.) Thus, a POSA would have understood that Oostman's light collector **111** is "**a collecting optical element configured to collect and focus fluorescent light emitted by a particle illuminated by the light source**" under Patent Owners construction. (EX1002, ¶177.)

Furthermore, a POSA would have understood that Oostman's light collector **111** "**focus**[es]" the fluorescent light, "**such that the fluorescent light leaving the collecting optical element converges**." (EX1002, ¶178.) Oostman explains that "[t]he focal spots produced by collector **111** enter the tip of each respective fiber **123**, **125**, **127** and **129**[.]" (Oostman, 6:4-7 (underlining added).) A POSA would have understood the term "focal spot" to indicate that light collector **111** focuses the light, causing it to converge.

Oostman's FIG 4 (annotated below) illustrates fluorescent light focusing and converging to the tip of each optical fiber **123**, **125**, **127** and **129** as it leaves the "**collecting optical element**" (in brown):

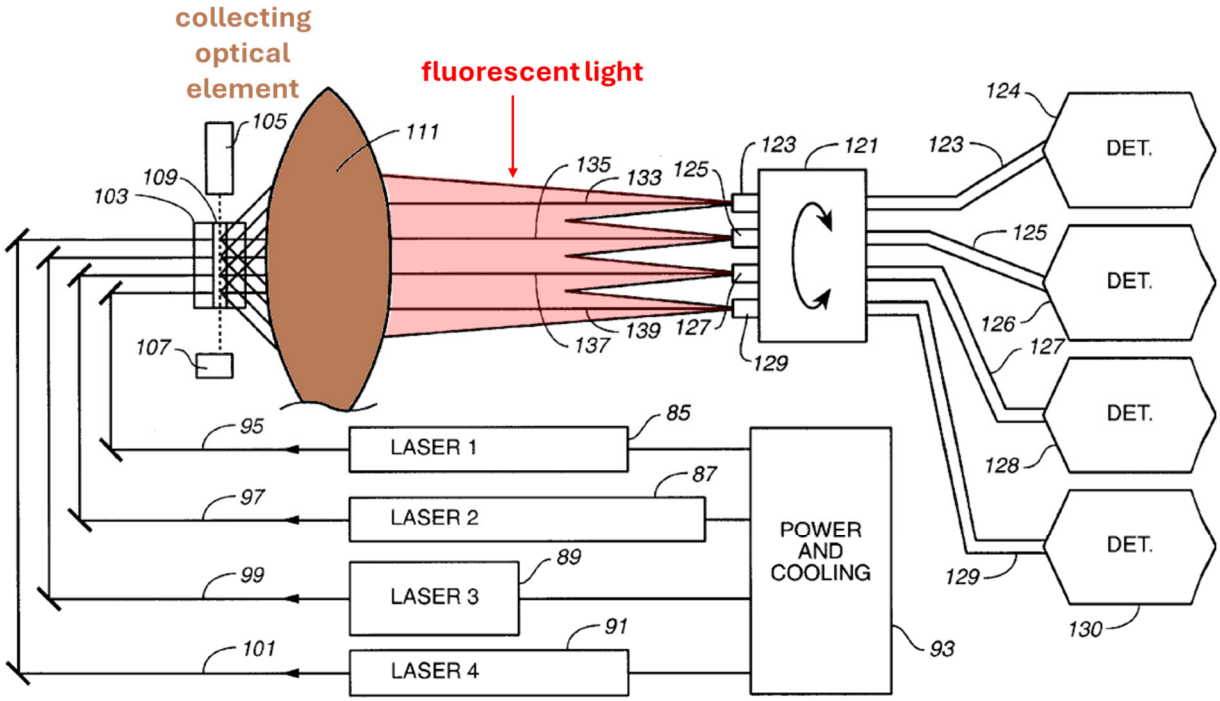

FIG._4

(Oostman, FIG. 4 (annotated); EX1002, ¶179.)

(d) Claim 13[c]: "a wavelength division multiplexer (WDM) configured to separate into color bands the fluorescent light collected by the collecting optical element, the WDM including,"

The combination of Oostman and Goodman discloses Claim 13[c]. (EX1002, ¶180.) Oostman's FIG. 4 depicts a flow cytometer setup comprising lasers **95**, **97**, **99**, **101** irradiating a target sample within fluidic system **105**, where fluorescent and scattered light is collected by a light collector **111** and focused into optical fibers **123**, **125**, **127**, **129** to route to respective detector arrays **124**, **126**, **128**, **130** (grey) for color separation and detection:

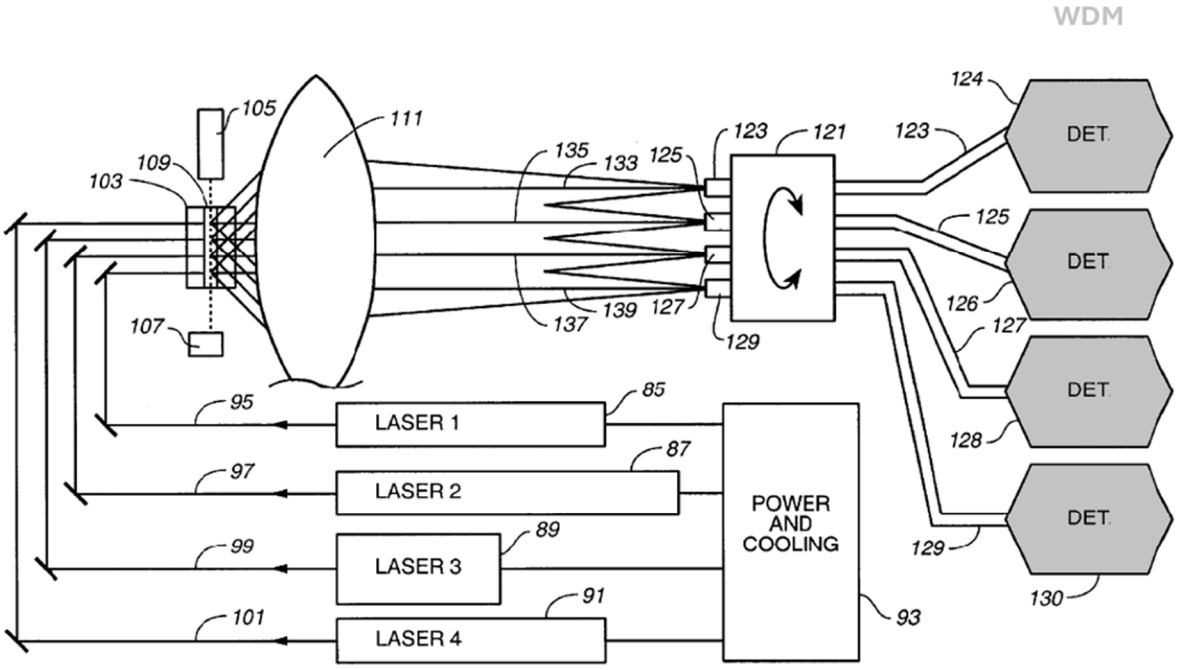

FIG._4

(Oostman, FIG. 4 (annotated); *see also id.*, 2:66-3:35, 4:25-45; EX1002, ¶180.)

Each of detector clusters **124**, **126**, **128**, **130** demultiplexes and detects light with each detector receiving a passband of wavelengths of light. (*Id.*, 6:34-36; EX1002, ¶180.) Thus, a POSA would have understood that Oostman's detector clusters are "**configured to separate into color bands the fluorescent light collected by the collecting optical element**." (EX1002, ¶180.) As stated above, the combination of Oostman and Goodman replaces the star WDM configuration of Oostman's detector arrays with an alternate, known zig-zag WDM configuration described in Goodman. (EX1002, ¶181.)

(e) Claim 13[d]: "a collimating optical element that is separate from the collecting optical element and is arranged to receive the fluorescent light collected by the collecting optical element, the collimating optical element configured to collimate the fluorescent light;"

The combination of Oostman and Goodman discloses Claim 13[d]. (EX1002, ¶182.) Oostman's WDM, modified with Goodman's zig-zag configuration, would have predictably resulted in the placement of Oostman's collimating lens at a focal length of the collimating lens from the output end of optical fiber **15** but before imaging element **18**, as shown below:

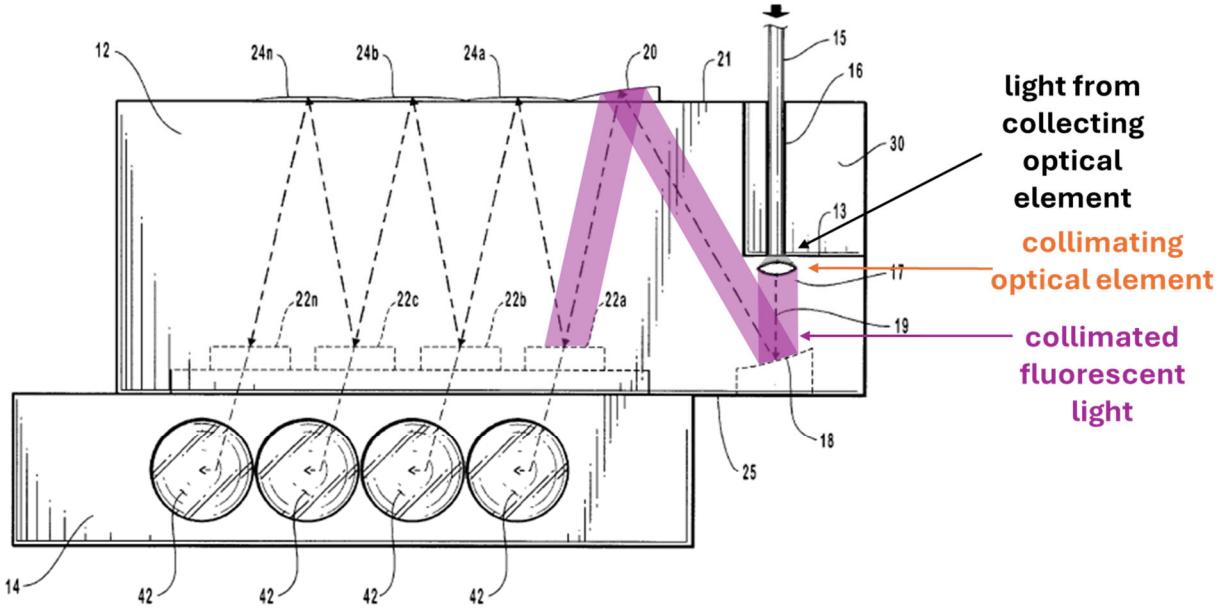

FIG. 1

(Goodman, FIG. 1 (annotated with Oostman's collimating lens); EX1002, ¶182.) Oostman's collimating lens, implemented in Goodman's WDM, is a "**collimating optical element**" under Patent Owner's proposed construction. (EX1002, ¶183.)

First, Oostman's collimating lens **203** is a "lens." (EX1002, ¶184.) Second, Oostman's collimating lens added into Goodman's zig-zag WDM "**is arranged to receive the fluorescent light collected by the collecting optical element**." (*Id.*, ¶184.) Oostman's WDM, modified for a zig-zag configuration per Goodman's teachings, would have predictably placed Oostman's collimating lens **203** in Goodman's WDM device. (EX1002, ¶184.)

Oostman's collimating lens in Goodman's zig-zag WDM also is "**configured to collimate the fluorescent light**" under either party's proposed construction for

"**collimate**" because a beam with parallel rays would have been "**collimate**[d]." (EX1002, ¶185.)

Finally, Oostman's collimating lens **203** is "**separate from the collecting optical element**," (i.e., light collector **111)** as described in Claim 13[b]. (EX1002, ¶186.)

(f) Claim 13[e]: "a row of mirrors arranged and configured to sequentially reflect different color bands of the fluorescent light collected by the collecting optical element after the fluorescent light has passed through the collimating optical element,"

The combination of Oostman and Goodman discloses Claim 13[e]. (EX1002, ¶187.) Goodman's "demultiplexer device … generally includes an optically transparent optical block seated atop an optically transparent beam-directing member[,]" where the "optical block includes … a plurality of relay reflectors[.]" (Goodman, 5:63-6:1; *see also id.*, 4:35-40.) Goodman's "plurality of relay reflectors" is further "positioned on top surface **21** of optical block **12** in a linear arrangement." (Goodman, 9:58-61.) This plurality of reflectors, collimating reflectors **24***a*-**24***n*, is a "**row of mirrors**." (EX1002, ¶187.) Goodman teaches that its reflectors can be collimating mirrors. (Goodman, 10:17-21.)

These mirrors are further "**arranged and configured to sequentially reflect different color bands of the fluorescent light**." Specifically, Goodman explains that

> The reflected wavelengths are directed to reflector **24***a*, which reflects the light incident thereupon towards wavelength selective element **22***b*, which in turn passes a selected band of wavelengths and reflects the remainder to a subsequent reflector **24***b*. Incident light on reflector **24***b* is relayed to wavelength selective element **22***c*, which transmits its preselected wavelengths and reflects the remainder to reflector **24***n*, which reflects the light to the final wavelength selective element **22***n*.

(Goodman, 12:4-12 (underlining added).) A POSA would have understood that the collimating reflectors **24***b*-**24***n* "**sequentially reflect different color bands of the fluorescent light**." (EX1002, ¶188.) A POSA would have understood that the use of "n" notation signals that a POSA could use any number of reflectors and that the reflectors will continue to "**sequentially reflect different color bands of the fluorescent light**." (*Id.*; *see also* Goodman, 12:12-15.) The annotated FIG. 1 below shows Goodman's "**row of mirrors**" (in green) "**sequentially reflect**[ing] **different color bands** [(dark green, red)] **of the fluorescent light**":

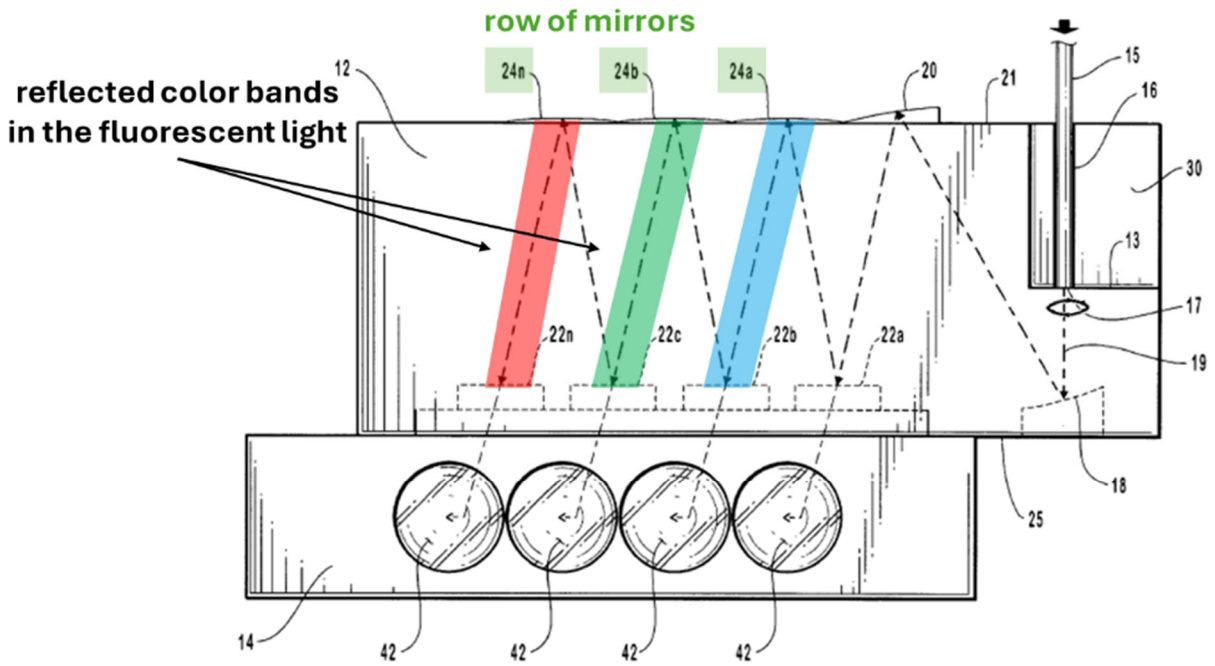

FIG. 1

(Goodman, FIG. 1 (annotated and including Oostman's collimating lens); EX1002, ¶188.)

The fluorescent light initially reflected at collimating reflector **24***a* is "**collected by the collecting optical element after the fluorescent light has passed through the collimating optical element**" for the reasons explained for Claim 13[d], incorporated here. (EX1002, ¶189.)

(g) Claim 13[f]: "the row of mirrors including at least one curved mirror"

Goodman discloses Claim 13[f] for the same reasons provided for Claim 13[f] in Ground 1, fully incorporated here. (EX1002, ¶190.)

(h) Claim 13[g]: "a row of dichroic filters opposed to the row of mirrors, each of the dichroic filters configured to pass one color band of the fluorescent light reflected by a mirror in the row of mirrors, and to reflect another color band of the fluorescent light reflected by the mirror;"

The combination of Oostman and Goodman discloses Claim 13[g]. (EX1002, ¶191.) Goodman discloses that each of its wavelength selective elements is a "**dichroic filter**" as explained for Claim 13[g] in Ground 1, incorporated here. (EX1002, ¶191.)

As explained in Claim 13[f], collimating reflectors **24***a*-**24***n* is the "**row of mirrors**." It follows that wavelength selective elements **22***b*-**22***n*, **"opposed to the row of mirrors**," comprises a "**row of dichroic filters**." (EX1002, ¶192.) Goodman expressly discloses that "reflectors are positioned <u>opposite</u> from the wavelength selective elements such that each of the reflectors … directs the beam of optical energy from one wavelength selective filter to an adjacent wavelength selective filter." (Goodman, 4:53-58 (underlining added).) Goodman also indicates that its "filters are configured in a serial arrangement along a lower portion of optical block **12**" and preferably "arranged in a linear array[.]" (Goodman, 8:16-19.)

Goodman discloses "**each of the dichroic filters configured to pass one color band of the fluorescent light reflected by a mirror in the row of mirrors, and to reflect another color band of the fluorescent light reflected by the**

mirror," for the same reasons provided for Claim 13[g] in Ground 1, fully incorporated here, but applied to wavelength selective elements **22***b*-**22***n* and collimating reflectors **24***a*-**24***n*. (EX1002, ¶¶193-94.)

Annotated FIG. 1 shows "**a row of dichroic filters**" (in beige), "**opposed to the row of mirrors**," each filter, "**configured to pass one color band of the fluorescent light**," (in light blue, light green, and light red), and "**to reflect another color band**," (in dark green and dark red). A POSA would have understood that the use of "n" notation signals that a POSA could use any number of wavelength selective elements and that the wavelength selective elements will continue to separate the fluorescent light and selectively pass or reflect the preselected color bands. (EX1002, ¶195; *see also* Goodman, 12:12-15.)

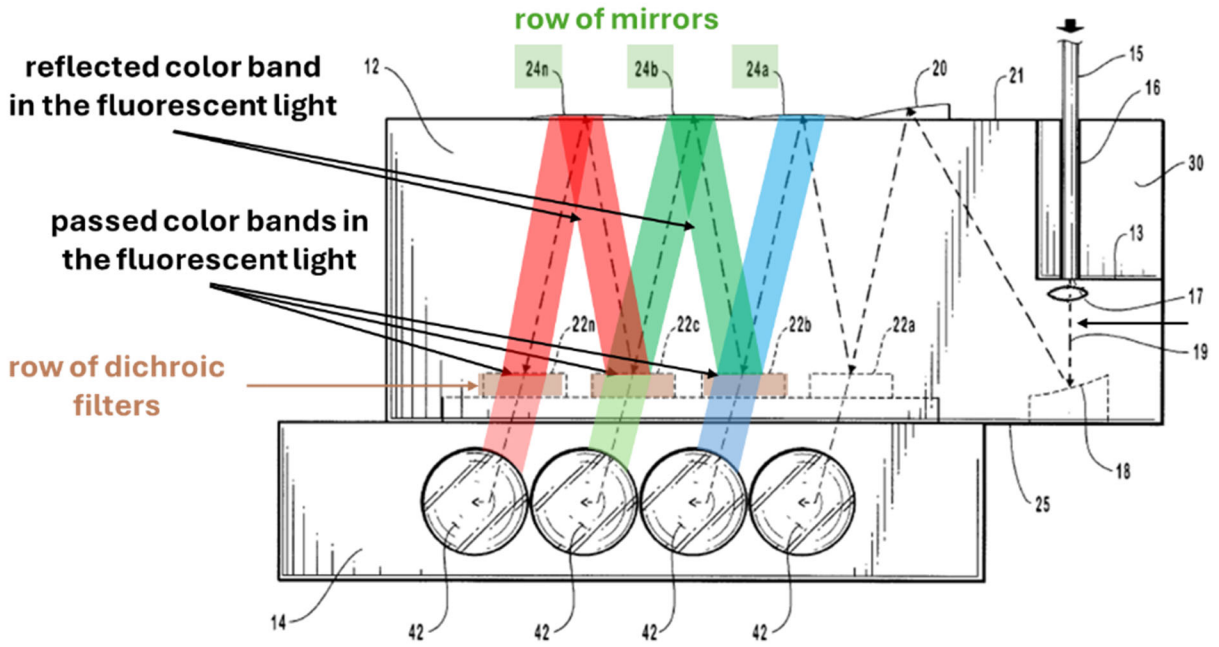

FIG. 1

(Goodman, FIG. 1 (annotated and including Oostman's collimating lens); EX1002, ¶195.)

(i) Claim 13[h]: "a row of semiconductor detectors, each of the semiconductor detectors arranged and configured to detect and quantitate the band of fluorescent light passing through a dichroic filter in the row of dichroic filters."

The combination of Oostman, Goodman, and Frazier discloses Claim 13[h]. (EX1002, ¶196.) Whereas Goodman generally teaches that each of its focusing lenses **42** may "focus a selected wavelength beam onto a corresponding optical receiver such as an optical detector," (Goodman, 11:40-42), Goodman does not disclose whether its optical detector is a "**semiconductor detector**" or not. Frazier fills in these implementation details, teaching that an avalanche photo-diode detector (APD – a "**semiconductor detector**") may be used in a zig-zag WDM like Goodman's FIG. 1 configuration. (Frazier, 4:19-21; EX1002, ¶196.)

As explained above for Claim 13[g], Goodman's wavelength selective elements **22***b*-**22***n* comprise a "**row of dichroic filters**." In the combined Oostman-Goodman-Frazier system, the semiconductor detectors optically coupled (by way of focusing lenses **42**) to the "**row of dichroic filters**" are a "**row of semiconductor detectors**." (EX1002, ¶196; Goodman, 11:8-11, 11:24-30, 11:40-44, 12:56-58.)

The combination of Oostman, Goodman, and Frazier discloses that "**each of the semiconductor detectors** [is] **arranged and configured to detect and**

quantitate the band of fluorescent light passing through a dichroic filter in the row of dichroic filters" for the same reasons provided for Claim 13[h] in Ground 1, incorporated here.

Annotated FIG. 1 shows that each semiconductor detector in the "**row of semiconductor detectors**" receives a band of fluorescent light (in light blue, light green, and light red), passing through dichroic filters:

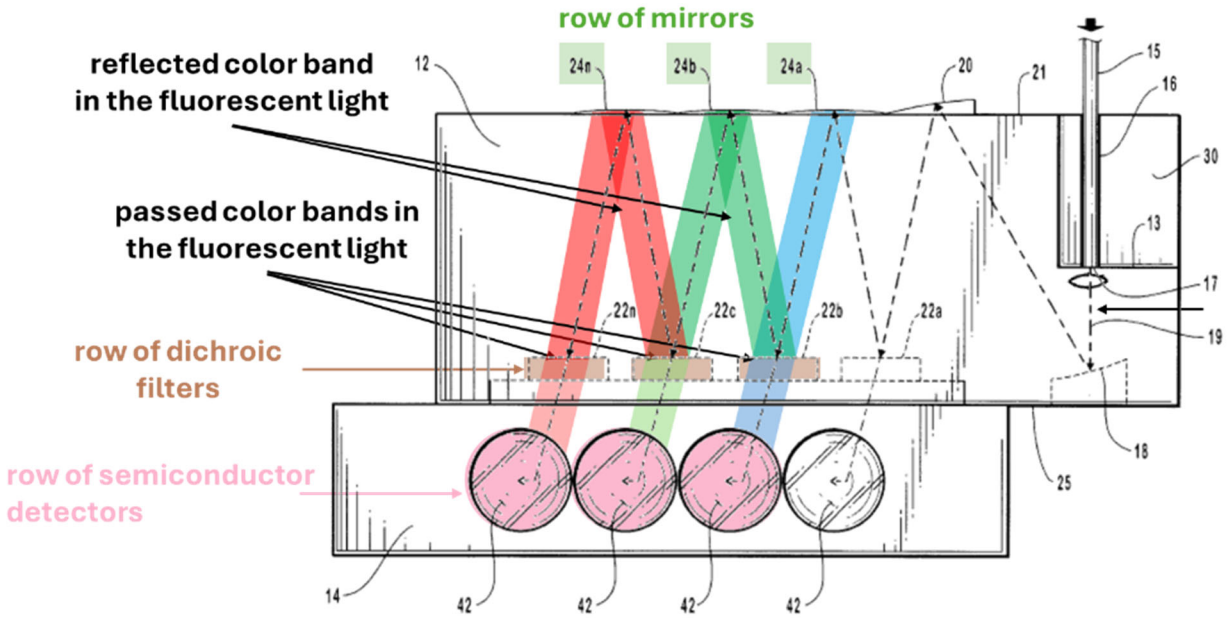

FIG. 1

(Goodman, FIG. 1 (annotated and including Oostman's collimating lens); EX1002, ¶196.)

4. Dependent Claim 14: "The flow cytometer of claim 13, further comprising a row of focusing optical elements, each of the focusing optical elements in the row arranged and configured to focus the band of fluorescent light passing through a dichroic filter in the row of dichroic filters onto the corresponding semiconductor detector."

Goodman describes a beam-directing member that includes a set of focusing lenses **42** that a POSA would have understood to be "**a row of focusing optical elements**." (EX1002, ¶197.) "[E]mitted wavelength beams" propagating from wavelength selective elements **22***a*-**22***n* may be "transmitted to the focusing lenses." (Goodman, 11:24-30.) As explained for Claim 13[h] incorporating Claim 13[h] in Ground 1, each of the focusing lenses **42** receives a portion of the fluorescent light that passed through an optically coupled wavelength selective element in the row of wavelength selective elements (i.e., "**row of dichroic filters**"). Goodman's focusing lens **42** can "**focus**" this portion of the collimated beam "onto a corresponding optical receiver such as an optical detector[,]" i.e., Frazier's avalanche photodiode ("**semiconductor detector**"). (*Id.*, 11:40-42; Frazier, 4:19-21.) Focusing lenses **42** (pink) receive wavelength portions of a collimated beam passing through wavelength selective elements **22***b*-**22***n*:

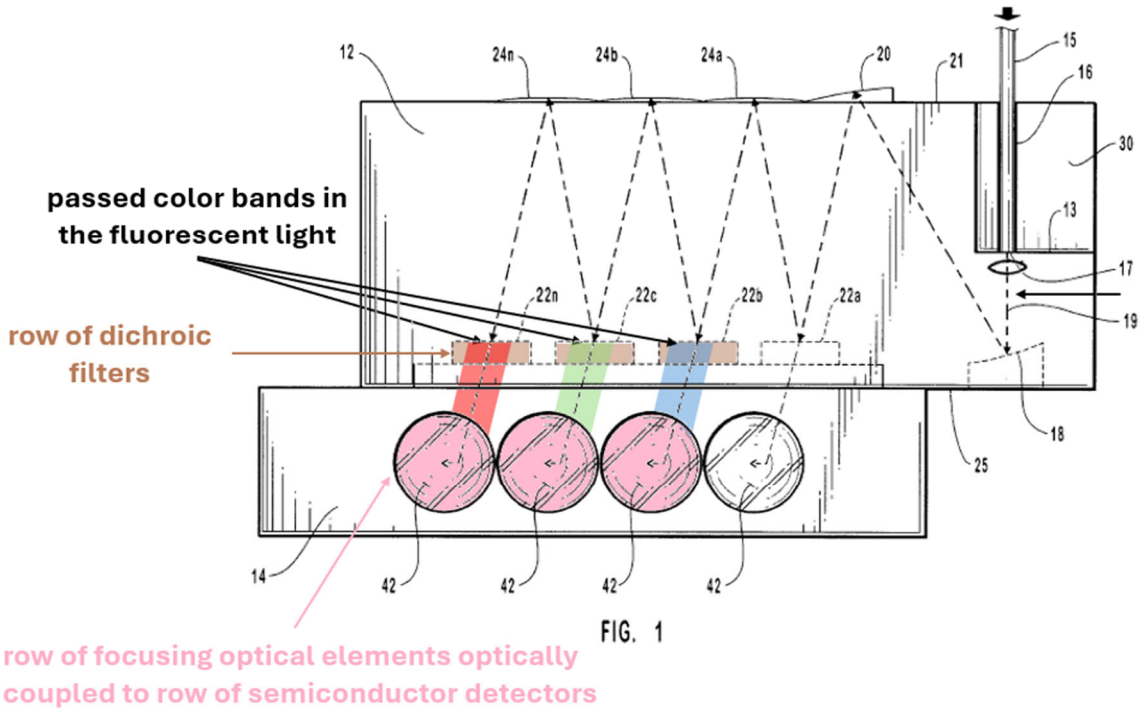

(Goodman, FIG. 1 (annotated and including Oostman's collimating lens); EX1002, ¶197.)

Goodman's focusing lens **42** discloses a "**focusing optical element**" under either party's construction, for the same reasons provided for Claim 14 in Ground 1, incorporated here. (EX1002, ¶198.)

5. Dependent Claim 17: "The flow cytometer of claim 13, wherein the row of mirrors and row of dichroic filters are arranged such that fluorescent light received by the WDM is reflected back and forth between the row of mirrors and the row of dichroic filters in a zig-zag pattern."

The combination of Oostman and Goodman discloses Claim 17 for the same reason provided for Claim 17 in Ground 1, incorporated here. (EX1002, ¶199.) The

light beam's optical path (in red) is a "**zig-zag pattern**" between "**the row of mirrors**" and "**the row of dichroic filters**."

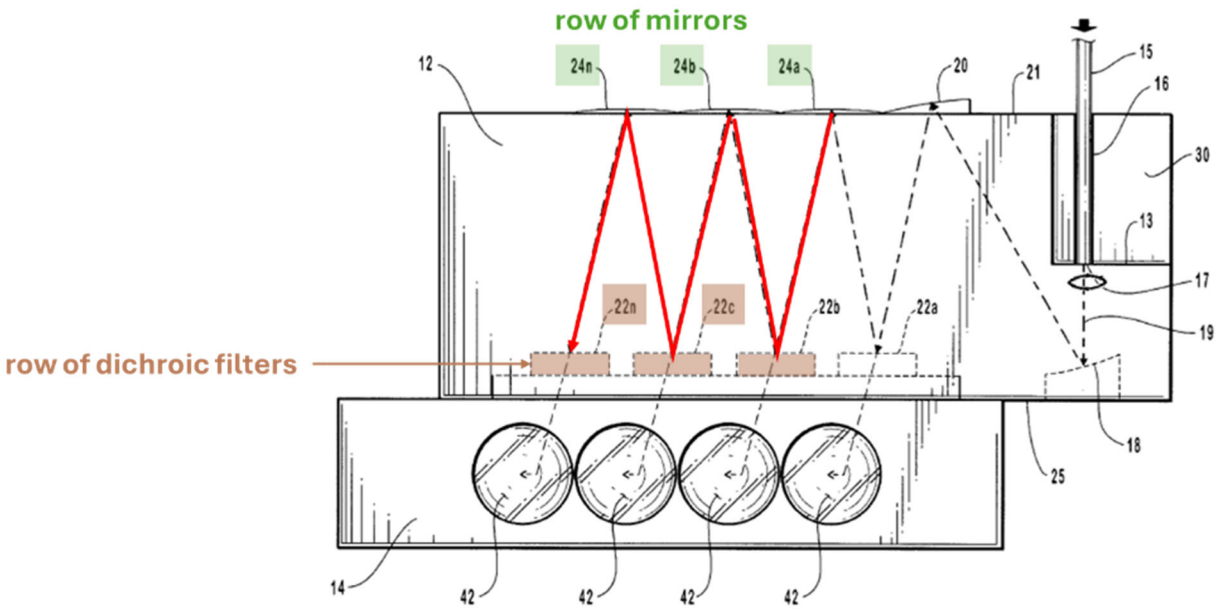

FIG. 1

(Goodman, FIG. 1 (annotated and including Oostman's collimating lens); EX1002, ¶199.)

XII. THE CHALLENGED CLAIMS ARE INVALID UNDER 35 U.S.C. § 112

A. <u>Ground 3</u>: The Challenged Claims Lack of Written Description for a "curved mirror"

The Challenged Claims are invalid under § 112 because the recited "curved mirror" lacks written description support. The '106 patent is a continuation of the '772 patent and shares a specification. As discussed in Section IX, insufficient written description exists for "curved mirror" in the prior applications to the '106 patent (now the '772 patent, '412 patent, and PCT App.). Because the '106 patent

shares a specification with the '772 patent, Petitioner's analysis in Section IX, incorporated here, applies with respect to the '106 patent. Written description exists only for a concave mirror.

B. Ground 4: The Challenged Claims Lack Full Scope Enablement for "semiconductor detector"

The Challenged Claims are not enabled as to "semiconductor detector." Claims are not enabled where the specification requires more than "reasonable amount of experimentation" to practice "the full scope" of the "invention as defined by its claims." *Amgen Inc. v. Sanofi*, 598 U.S. 594, 610, 612 (2023). "A patentee who chooses broad claim language must make sure the broad claims are fully enabled," including as to each claimed embodiment. *Sitrick v. Dreamworks, LLC*, 516 F.3d 993, 999 (Fed. Cir. 2008) (finding claim invalid where a claimed embodiment was not enabled); *see also, e.g., Trs. of Bos. Univ. v. Everlight Elecs. Co.*, 896 F.3d 1357, 1363–64 (Fed. Cir. 2018) (same); *Liebel-Flarsheim Co. v. Medrad, Inc.*, 481 F.3d 1371, 1378–79 (Fed. Cir. 2007) (same); *Auto. Techs. Int'l, Inc. v. BMW of N. Am., Inc.*, 501 F.3d 1274, 1281–85 (Fed. Cir. 2007) (same); *AK Steel Corp. v. Sollac & Ugine*, 344 F.3d 1234, 1243–44 (Fed. Cir. 2003) (same).

Here, the claimed embodiments include a flow cytometer that uses a WDM with a semiconductor detector comprising a carbon nanotube detector. While the '106 specification describes "semiconductor detector" as including "carbon

nanotubes detectors," this type of semiconductor detector (1) was not available by the effective filing date for the '106 patent, December 22, 2021 (nor is it available today); and (2) the '106 specification fails to teach a POSA how to make or use such a detector without undue experimentation. Applying the *Wands* factors here demonstrates that the claimed "semiconductor detector" is not fully enabled with respect to carbon nanotube detectors. *In re Wands*, 858 F.2d 731, 737 (Fed. Cir. 1988).

Wands Factor No. 1 – Breadth of the Claims. Claims 1 and 13 (and, therefore, dependent claims 2, 10, 11, 14, and 17) each recites a WDM that includes a "semiconductor detector(s)" to "detect and quantitate" a "band of fluorescent light." (*See* '106, cls. 1, 13; *see also* EX1002, ¶204.) A POSA reading the claims in light of the specification would have understood that "semiconductor detector" broadly claims a type of photodetectors. (EX1002, ¶204.) FIG. 25A depicts a six-port WDM **90** with photodetectors **940**, **941**, **942**, **943**, **944**, **945 (**in yellow):

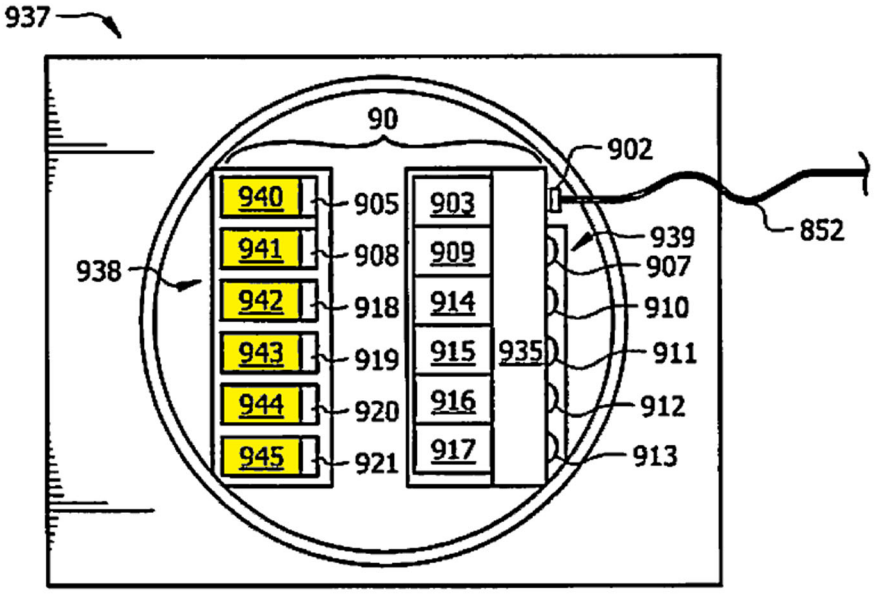

FIG. 25A

('106, FIG. 25A; EX1002, ¶204.) Each of photodetectors **940**, **941**, **942**, **943**, **944**, **945** "can be, but is not limited to, a semiconductor detector, an avalanche photodetector (APD), and a carbon nanotube detector." ('106, 46:62-64.) The "semiconductor detector may be an avalanche photodiode or a carbon nanotube detector," (*id*., 8:39-40), indicating to a POSA that the claimed "semiconductor detector" covers ***both*** APDs and carbon nanotube detectors, (EX1002, ¶204).

Wands Factor No. 2 – Field or Nature of the Invention. The field of the invention is flow cytometry, fiber optics, and wavelength demultiplexing and detection. (EX1002, ¶205 (citing '106, 1:39-42).) The '106 patent refers to various subassemblies in the claimed flow cytometer, with a photodetection assembly that

includes semiconductor detectors. (*Id.* (citing '106, 8:39-40, 46:62-64).)

Wands Factors Nos. 3 and 4 – State of the Prior Art at the Time of the Invention & Level of Ordinary Skill. A POSA would have been aware of various types of photodetectors used in flow cytometry as of December 22, 2021, including PMTs, APDs, and silicon photodiodes. (EX1002, ¶206; EX1007, pp.151-156.) The '106 specification describes several commercialized examples of PMTs and APDs, ('106, 44:9-33), but no commercial carbon nanotube detectors. That is because, as late as December 2021 (and even today), carbon nanotube detectors were neither commercially available nor known to be applied in flow cytometry. (EX1002, ¶207; EX1080, p.001.) Carbon nanotube detectors were and continue to be the subject of ongoing experimental research and development. (EX1080, p.001 (April 2019 article concluding that carbon nanotube detectors "are good ***candidates*** for photodetector applications" (emphasis added)); EX1082, Abst., pp.001, 013 (November 2023 article describing challenges carbon nanotube detectors face before "find[ing] their way toward real applications"); EX1083, Abst., pp.001, 013 (February 2023 article explaining that "in terms of photodetector performance, there is still a gap between current [prototypes] and traditional photodetectors"); EX1084, Abst., pp.001, 002 (July 2024 article noting the "significant ***potential***" that carbon nanotube detectors have across different disciplines (emphasis added)); *see also* EX1002, ¶207.)

The POSA definitions provided by the parties (*see* Section VII; EX1081, p.012) cite to areas of expertise and experience—e.g., electrical engineering, optics, physics, physical chemistry—that fall far short of the materials science and engineering experience minimally required to design and implement carbon nanotube detectors in the claimed flow cytometer. (EX1002, ¶208.) As of December 2021, carbon nanotube detectors were experimental even among ***carbon nanotube detector*** experts (and continue to be so today). (*Id*.)

Wands Factors Nos. 6 and 7 – Guidance from the Specification & Working Examples. By December 2021, a POSA would not have known how to build or use a carbon nanotube detector, which were not then commercially available. (EX1002, ¶209.) While the '106 specification discloses several examples and designs regarding other photodetectors (such as PMTs and APDs), it remains silent as to how a POSA would design or use a carbon nanotube detector to practice the claimed invention. The '106 specification only references carbon nanotube detectors three times as a type of semiconductor detector, ('106, 8:39-40, 52:65-67, 59:24-26), and conveys no details of its design, implementation, or use in the claimed flow cytometer. (EX1002, ¶210.)

Wands Factors Nos. 5 and 8 – Predictability & Amount of Experimentation. Developing new types of photodetectors for flow cytometry is highly unpredictable and requires significant experimentation across multiple design parameters.

(EX1002, ¶211.) For example, adopting APDs in the field of flow cytometry over traditionally-favored PMTs required factoring in, *e.g.*, active area size, temperature dependence, detector size, quantum efficiency, signal-to-noise ratio, and spectral response range. (*Id.*) These same factors would have to be accounted for in designing and integrating carbon nanotube detectors into the claimed flow cytometer, yet the specification provides no applicable guidance.

C. Ground 5: The Challenged Claims Lack Written Description Support for "semiconductor detector" With Respect to Carbon Nanotube Detectors

For the same reasons detailed in Ground 4, incorporated here, the Challenged Claims lack written description support for "semiconductor detector." The written description mentions a carbon nanotube detector only three times, and only to classify it as both a photodetector and semiconductor detector. ('106, 8:39-40, 52:65-67, 59:24-26.) No blaze marks are found that indicate to a POSA that the inventor had possession of carbon nanotube detectors, especially when by December 2021 they were commercially unavailable and outside a POSA's general knowledge. (EX1002, ¶212.)

XIII. CONCLUSION

Petitioner respectfully requests institution.

Dated: September 15, 2025

Respectfully submitted,

COOLEY LLP
ATTN: Patent Group
1299 Pennsylvania Avenue NW
Suite 700
Washington, DC 20004
Tel: (202) 776-2066
Fax: (202) 842-7899

By: / Dustin M. Knight /
Dustin M. Knight
(Reg. No. 76,239)
Counsel for Petitioner

CERTIFICATE OF COMPLIANCE WITH WORD COUNT

Pursuant to 37 C.F.R. § 42.24(d), I certify that this petition complies with the type-volume limits of 37 C.F.R. § 42.24(a)(1)(i) because it contains 13,071 words, according to the word-processing system used to prepare this petition, excluding the parts of this petition that are exempted by 37 C.F.R. § 42.24(a) (including the table of contents, a table of authorities, mandatory notices, a certificate of service or this certificate word count, appendix of exhibits, and claim listings).

DATED: September 15, 2025

COOLEY LLP
ATTN: Patent Docketing
1299 Pennsylvania Avenue NW
Suite 700
Washington, DC 20004
Tel: (202) 776-2066
Fax: (202) 842-7899

/ Dustin M. Knight /
Dustin M. Knight
(Reg. No. 76,239)

CERTIFICATE OF SERVICE

I hereby certify, pursuant to 37 C.F.R. Sections 42.6 and 42.105, that a complete copy of the attached **PETITION FOR POST-GRANT REVIEW OF U.S. PATENT NO. 12,174,106 B2**, including all exhibits (**Nos. 1001-1103**) and related documents, are being served via Federal Express on the 15th day of September, 2025, the same day as the filing of the above-identified document in the United States Patent and Trademark Office/Patent Trial and Appeal Board, upon Patent Owner by serving the correspondence address of record with the USPTO as follows:

129381 – NORTON ROSE FULBRIGHT US LLP – BCI
98 San Jacinto Blvd., Suite 1100
Austin, TX 78701

And, via Federal Express upon counsel of record for Patent Owner in the litigation pending before the U.S. District Court for the District of Delaware titled *Beckman Coulter, Inc. v. Cytek Biosciences, Inc*., No. 1:24-cv-00945-CFC-EGT (D. Del.) as follows:

Frederick L. Cottrell III
Kelly E. Farnan
Christine D. Haynes
RICHARDS, LAYTON & FINGER P.A.
One Rodney Square
920 North King Street
Wilmington, DE 19801

Omar A. Khan
Jeffrey A. Dennhardt
Lauren E. Matlock-Colangelo
WILMER CUTLER PICKERING HALE
AND DORR LLP
7 World Trade Center
250 Greenwich Street
New York, NY 10007

Asher S. McGuffin
WILMER CUTLER PICKERING HALE
AND DORR LLP

60 State Street
Boston, MA 02109

DATED: September 15, 2025

/ Dustin M. Knight /
Dustin M. Knight
(Reg. No. 76,239)
COOLEY LLP
ATTN: Patent Docketing
1299 Pennsylvania Avenue
NW Suite 700
Washington, DC 20004
Tel: (202) 776-2066
Fax: (202) 842-7899