US012174106B2

(12) **United States Patent**
**Chen**

(10) **Patent No.: US 12,174,106 B2**
(45) **Date of Patent: Dec. 24, 2024**

(54) **FLOW CYTOMETER**

(71) Applicant: **Beckman Coulter, Inc.**, Brea, CA (US)

(72) Inventor: **Yong Qin Chen**, San Jose, CA (US)

(73) Assignee: **BECKMAN COULTER, INC.**, Brea, CA (US)

( * ) Notice: Subject to any disclaimer, the term of this patent is extended or adjusted under 35 U.S.C. 154(b) by 289 days.

(21) Appl. No.: **17/645,727**

(22) Filed: **Dec. 22, 2021**

(65) **Prior Publication Data**

US 2022/0113241 A1 Apr. 14, 2022

**Related U.S. Application Data**

(60) Continuation of application No. 15/638,477, filed on Jun. 30, 2017, now Pat. No. 11,255,772, which is a

(Continued)

(51) **Int. Cl.**
***G02B 21/04*** (2006.01)
***F04B 11/00*** (2006.01)

(Continued)

(52) **U.S. Cl.**
CPC ..... ***G01N 15/1436*** (2013.01); ***F04B 11/0025*** (2013.01); ***G01N 15/1434*** (2013.01);

(Continued)

(58) **Field of Classification Search**
CPC ..... G01N 15/1436; G01N 15/1434; G01N 15/1459; G01N 35/1095;

(Continued)

(56) **References Cited**

U.S. PATENT DOCUMENTS

315,667 A 4/1885 Serdinko
2,385,495 A 9/1945 Brian

(Continued)

FOREIGN PATENT DOCUMENTS

CN 1199177 11/1998
CN 102087198 6/2011

(Continued)

OTHER PUBLICATIONS

Brogioli et al., "Heterodyne near-field scattering," *Applied Physics Letters* 81(22):4109-4111, 2002.

(Continued)

*Primary Examiner* — Isiaka O Akanbi
(74) *Attorney, Agent, or Firm* — Norton Rose Fulbright US LLP

(57) **ABSTRACT**

The disclosed flow cytometer includes a wavelength division multiplexer (WDM). The WDM includes an extended light source providing light that forms an object, a collimating optical element that captures light from the extended light source and projects a magnified image of the object as a first light beam, and a first focusing optical element configured to focus the first light beam to a size smaller than the object of the extended light source to a first semiconductor detector. The disclosed flow cytometer further includes a composite microscope objective to direct light emitted by a particle in a flow channel in a viewing zone of the composite microscope to the extended light source, a fluidic system and a peristaltic pump configured to supply liquid sheath and liquid sample to the flow channel, and a laser diode system to illuminate the particle in the flow channel.

**20 Claims, 35 Drawing Sheets**

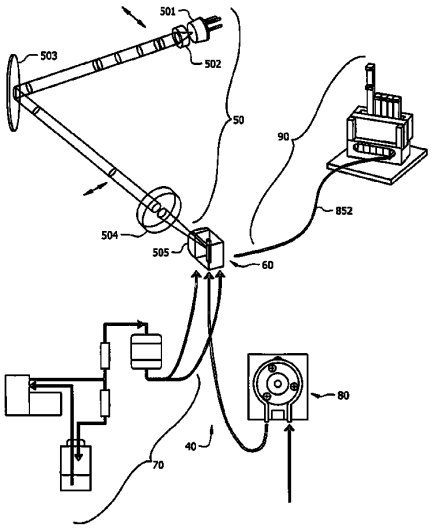

**Related U.S. Application Data**

division of application No. 14/555,102, filed on Nov. 26, 2014, now Pat. No. 9,746,412, which is a continuation-in-part of application No. PCT/US2013/043453, filed on May 30, 2013.

(60) Provisional application No. 61/911,859, filed on Dec. 4, 2013, provisional application No. 61/816,819, filed on Apr. 29, 2013, provisional application No. 61/715,836, filed on Oct. 19, 2012, provisional application No. 61/715,819, filed on Oct. 18, 2012, provisional application No. 61/653,245, filed on May 30, 2012, provisional application No. 61/653,328, filed on May 30, 2012.

(51) **Int. Cl.**

| | |
|---|---|
| ***G01N 15/14*** | (2006.01) |
| ***G01N 15/1434*** | (2024.01) |
| ***G01N 35/10*** | (2006.01) |
| ***G02B 6/26*** | (2006.01) |
| ***G02B 6/293*** | (2006.01) |
| ***G02B 21/36*** | (2006.01) |
| ***G02B 27/00*** | (2006.01) |
| *G01N 15/10* | (2006.01) |

(52) **U.S. Cl.**

CPC ..... ***G01N 15/1459*** (2013.01); ***G01N 35/1095*** (2013.01); ***G02B 6/26*** (2013.01); ***G02B 6/29365*** (2013.01); ***G02B 21/04*** (2013.01); ***G02B 21/361*** (2013.01); ***G02B 27/0025*** (2013.01); *G01N 2015/1006* (2013.01); *G01N 2015/144* (2013.01); *G01N 2015/1452* (2013.01)

(58) **Field of Classification Search**

CPC ..... G01N 2015/1006; G01N 2015/144; G01N 2015/1452; F04B 11/0025; G02B 6/26; G02B 6/29365; G02B 21/04; G02B 21/361; G02B 27/0025

USPC ..... 356/338, 335, 339, 336, 340, 625

See application file for complete search history.

(56) **References Cited**

U.S. PATENT DOCUMENTS

| | | | | |
|---|---|---|---|---|
| 2,669,709 | A | | 2/1954 | Glancy et al. |
| 2,764,147 | A | | 9/1956 | Brunner |
| 3,199,341 | A | | 8/1965 | Heuer, Jr. et al. |
| 3,411,293 | A | | 11/1968 | Akins |
| 3,542,491 | A | | 11/1970 | Newman |
| 3,661,460 | A | | 5/1972 | Elking et al. |
| 3,726,613 | A | | 4/1973 | von Casimir |
| 3,826,593 | A | | 7/1974 | von Casimir |
| 3,873,204 | A | | 3/1975 | Friedman et al. |
| 3,946,239 | A | | 3/1976 | Salzman et al. |
| 3,953,727 | A | | 4/1976 | d'Auria et al. |
| 3,989,381 | A | | 11/1976 | Fulwyler |
| 4,073,574 | A | | 2/1978 | Clarke et al. |
| 4,188,543 | A | | 2/1980 | Brunsting et al. |
| 4,189,236 | A | | 2/1980 | Hogg et al. |
| 4,244,045 | A | | 1/1981 | Nosu et al. |
| 4,482,994 | A | | 11/1984 | Ishikawa |
| 4,515,274 | A | | 5/1985 | Hollinger et al. |
| 4,564,342 | A | | 1/1986 | Weber et al. |
| 4,576,556 | A | | 3/1986 | Thompson |
| 4,623,225 | A | | 11/1986 | Forkner |
| 4,673,289 | A | | 6/1987 | Gaucher |
| 4,727,020 | A | * | 2/1988 | Recktenwald ..... G01N 15/1459 436/63 |
| 4,745,285 | A | | 5/1988 | Recktenwald et al. |
| 4,778,253 | A | | 10/1988 | Siga et al. |
| 4,834,630 | A | | 5/1989 | Godwin |
| 4,871,249 | A | | 10/1989 | Watson |
| 4,920,275 | A | | 4/1990 | Itoh |
| 4,950,136 | A | | 8/1990 | Haas et al. |
| 4,976,590 | A | | 12/1990 | Baldwin |
| 4,997,275 | A | | 3/1991 | Gaucher et al. |
| 5,050,963 | A | | 9/1991 | Murakami |
| 5,142,462 | A | | 8/1992 | Kashima |
| 5,157,917 | A | | 10/1992 | Liang et al. |
| 5,177,641 | A | | 1/1993 | Kobayashi et al. |
| 5,230,614 | A | | 7/1993 | Zanger et al. |
| 5,245,318 | A | | 9/1993 | Tohge et al. |
| 5,251,060 | A | | 10/1993 | Uenishi et al. |
| 5,257,917 | A | | 11/1993 | Minarik et al. |
| 5,299,066 | A | | 3/1994 | Rombult |
| 5,317,162 | A | * | 5/1994 | Pinsky ..... G01N 15/1459 250/459.1 |
| 5,369,476 | A | | 11/1994 | Bowers et al. |
| 5,373,395 | A | | 12/1994 | Adachi |
| 5,396,487 | A | | 3/1995 | Abe et al. |
| 5,467,225 | A | | 11/1995 | Manabe |
| 5,470,211 | A | | 11/1995 | Knott et al. |
| 5,475,210 | A | | 12/1995 | Taguchi et al. |
| 5,540,494 | A | * | 7/1996 | Purvis, Jr. ..... G01N 15/0211 356/336 |
| 5,548,395 | A | | 8/1996 | Kosaka |
| 5,583,683 | A | | 12/1996 | Scobey |
| 5,615,200 | A | | 3/1997 | Hoshino et al. |
| 5,746,585 | A | | 5/1998 | McDunn et al. |
| 5,748,372 | A | | 5/1998 | Kitagawa |
| 5,777,674 | A | | 7/1998 | Ohmuro |
| 5,781,351 | A | | 7/1998 | Murakami et al. |
| 5,786,915 | A | | 7/1998 | Scobey |
| 5,788,927 | A | | 8/1998 | Farrell et al. |
| 5,805,363 | A | | 9/1998 | Okuda et al. |
| 5,850,292 | A | | 12/1998 | Braun |
| 5,872,627 | A | * | 2/1999 | Miers ..... G01N 15/1431 356/338 |
| 5,915,925 | A | | 6/1999 | North, Jr. |
| 5,971,713 | A | | 10/1999 | North, Jr. |
| 6,008,920 | A | | 12/1999 | Hendrix |
| 6,017,194 | A | | 1/2000 | North, Jr. |
| 6,102,678 | A | | 8/2000 | Peclat |
| 6,135,734 | A | | 10/2000 | Isozumi et al. |
| 6,159,686 | A | | 12/2000 | Kardos et al. |
| 6,198,864 | B1 | | 3/2001 | Lemoff et al. |
| 6,200,101 | B1 | | 3/2001 | North, Jr. |
| 6,252,719 | B1 | | 6/2001 | Eichenbaum |
| 6,315,952 | B1 | | 11/2001 | Sklar et al. |
| 6,510,007 | B1 | | 1/2003 | Blasenheim |
| 6,542,306 | B2 | | 4/2003 | Goodman |
| 6,572,255 | B2 | | 6/2003 | Husher |
| 6,608,682 | B2 | | 8/2003 | Ortyn et al. |
| 6,618,143 | B2 | | 9/2003 | Roche et al. |
| 6,638,481 | B2 | | 10/2003 | Sklar et al. |
| 6,647,175 | B1 | | 11/2003 | LoRegio et al. |
| 6,683,314 | B2 | * | 1/2004 | Oostman, Jr. ..... G01J 3/36 250/459.1 |
| 6,713,019 | B2 | | 3/2004 | Ozasa et al. |
| 6,748,133 | B2 | | 6/2004 | Liu et al. |
| 6,767,188 | B2 | | 7/2004 | Vrane et al. |
| 6,768,593 | B1 | | 7/2004 | Jutamulia |
| 6,788,409 | B2 | | 9/2004 | Goodwin |
| 6,794,671 | B2 | | 9/2004 | Nicoli et al. |
| 6,813,017 | B1 | | 11/2004 | Hoffman et al. |
| 6,839,367 | B2 | | 1/2005 | Nagamatsu et al. |
| 6,870,679 | B2 | | 3/2005 | Randall et al. |
| 6,870,976 | B2 | | 3/2005 | Chen et al. |
| 6,897,954 | B2 | | 5/2005 | Bishop et al. |
| 6,941,047 | B2 | | 9/2005 | Capewell et al. |
| 6,954,722 | B2 | | 10/2005 | Parks et al. |
| 6,975,400 | B2 | | 12/2005 | Ortyn et al. |
| 7,038,778 | B2 | | 5/2006 | Yamauchi |
| 7,072,540 | B1 | | 7/2006 | Szapiel et al. |
| 7,110,192 | B2 | | 9/2006 | Sauter et al. |
| 7,113,266 | B1 | | 9/2006 | Wells |
| 7,127,356 | B2 | | 10/2006 | Nicoli et al. |
| 7,129,505 | B2 | | 10/2006 | Oostman, Jr. et al. |
| 7,212,343 | B1 | | 5/2007 | He et al. |

(56) **References Cited**

U.S. PATENT DOCUMENTS

7,260,328 B2 8/2007 Kropp
7,262,838 B2 8/2007 Fritz
7,268,953 B2 9/2007 Matthae et al.
7,305,018 B2 12/2007 Otoma
7,381,565 B2 6/2008 Kurabayashi et al.
7,385,682 B2 6/2008 Chu et al.
7,430,048 B2 9/2008 Reel et al.
7,450,229 B2 11/2008 Ortyn et al.
7,453,915 B2 11/2008 Imai
7,456,960 B2 11/2008 Cerni et al.
7,496,463 B2 2/2009 Nicoli et al.
7,505,131 B2 3/2009 Roth
7,507,588 B2 3/2009 Mehrpouyan et al.
7,561,267 B2 7/2009 Luo et al.
7,580,120 B2 8/2009 Hamada et al.
7,623,243 B2 11/2009 Kato
7,630,147 B1 12/2009 Kar et al.
7,645,127 B2 1/2010 Hagen et al.
7,668,422 B2 2/2010 Kropp
7,758,324 B2 6/2010 Baumann et al.
7,768,120 B2 8/2010 Takashima
7,781,227 B2 8/2010 Mehrpouyan et al.
7,787,197 B2 8/2010 Chen
7,835,000 B2 11/2010 Graves et al.
7,876,436 B2 1/2011 Chu
7,889,263 B2 2/2011 Ortyn et al.
7,894,047 B2 2/2011 Hamada et al.
7,952,981 B2 3/2011 Suzuki
7,981,661 B2 7/2011 Rich
8,009,189 B2 8/2011 Ortyn et al.
8,049,185 B2 11/2011 Hayashi et al.
8,149,525 B2 4/2012 Do
8,157,547 B2 4/2012 Vrielink
8,187,888 B2 5/2012 Rich
8,213,472 B2 7/2012 Hirai et al.
8,229,707 B2 7/2012 Olson et al.
8,233,146 B2 7/2012 Chen
8,253,938 B2 8/2012 Vacca et al.
8,270,098 B2 9/2012 Fukuta et al.
8,284,402 B2 10/2012 Frazier et al.
8,337,096 B2 12/2012 Shen et al.
8,345,237 B2 1/2013 Tsukii et al.
8,405,048 B2 3/2013 Hayashi
8,432,541 B2 4/2013 Rich
8,436,371 B2 5/2013 Medendorp, Jr. et al.
8,436,993 B2 5/2013 Kaduchak et al.
8,488,244 B1 7/2013 Li et al.
8,507,279 B2 8/2013 Ball et al.
8,928,881 B2 1/2015 Swalwell
9,746,412 B2 8/2017 Chen
10,261,080 B2 * 4/2019 Li ..... G01N 15/1459
11,169,076 B2 * 11/2021 Yan ..... G01N 21/47
11,255,772 B2 2/2022 Chen
11,333,597 B2 5/2022 Yan et al.
2002/0067895 A1 6/2002 Flanders
2002/0081744 A1 6/2002 Chan et al.
2002/0131180 A1 9/2002 Goodman
2002/0141902 A1 10/2002 Ozasa et al.
2003/0044967 A1 3/2003 Heffelfinger et al.
2003/0048539 A1 * 3/2003 Oostman, Jr. ..... G01J 3/10 359/634
2003/0142720 A1 7/2003 Bradburn et al.
2004/0031521 A1 2/2004 Vrane et al.
2004/0101247 A1 5/2004 Chen et al.
2004/0165828 A1 8/2004 Capewell et al.
2004/0218184 A1 11/2004 Joregenson et al.
2004/0033010 A1 12/2004 McGuire, Jr.
2005/0002425 A1 1/2005 Govorkov et al.
2005/0084402 A1 4/2005 Vanek
2005/0134836 A1 6/2005 Paldus et al.
2005/0274890 A1 12/2005 Anderton et al.
2006/0221325 A1 10/2006 Wells
2006/0245964 A1 11/2006 Koslov
2006/0256333 A1 11/2006 Bloom et al.
2006/0256335 A1 11/2006 Chen
2006/0292021 A1 12/2006 Tu
2007/0124947 A1 6/2007 Munroe et al.
2007/0195310 A1 8/2007 Kanda
2007/0212784 A1 9/2007 Okun
2007/0296744 A1 12/2007 Kubota et al.
2008/0010019 A1 * 1/2008 Thomas ..... G01J 3/021 702/57
2008/0024758 A1 1/2008 Tabata
2008/0241911 A1 10/2008 Ueno et al.
2009/0091746 A1 4/2009 Fukuda et al.
2009/0131859 A1 5/2009 DelCastillo et al.
2009/0174881 A1 7/2009 Rich
2009/0190128 A1 7/2009 Cerni et al.
2009/0310122 A1 12/2009 Hamada et al.
2010/0067079 A1 3/2010 Rathjen
2010/0165341 A1 7/2010 Babico et al.
2010/0188559 A1 7/2010 Ortyn et al.
2011/0014075 A1 1/2011 Reif et al.
2011/0032522 A1 2/2011 Graves et al.
2011/0089328 A1 4/2011 Li
2011/0216401 A1 9/2011 Curry
2012/0019825 A1 * 1/2012 Thomas ..... G01N 15/1429 356/338
2012/0156074 A1 6/2012 Kusch et al.
2012/0211679 A1 8/2012 Heng et al.
2012/0274925 A1 11/2012 Chen et al.
2012/0281204 A1 11/2012 Hoshishima et al.
2012/0282126 A1 11/2012 Brandt et al.
2012/0287419 A1 11/2012 Sharpe et al.
2013/0010181 A1 1/2013 Baba
2013/0020498 A1 1/2013 Ebi et al.
2013/0050782 A1 2/2013 Heng et al.
2013/0070243 A1 3/2013 Goehde
2013/0094102 A1 4/2013 Baba
2013/0204538 A1 8/2013 Rich
2013/0214176 A1 8/2013 Graves et al.
2013/0308122 A1 * 11/2013 Merchez ..... G01N 21/47 356/72
2016/0091484 A1 * 3/2016 Yamada ..... G01N 15/1459 356/40
2018/0024040 A1 * 1/2018 Yan ..... G01J 3/021 435/288.7

FOREIGN PATENT DOCUMENTS

CN 201917509 U 8/2011
CN 201936066 U 8/2011
CN 201984209 U 9/2011
CN 102282453 12/2011
CN 102449525 5/2012
CN 102818794 12/2012
CN 102818795 12/2012
CN 102818796 12/2012
EP 459764 A2 12/1991
EP 459764 B1 12/1996
EP 757346 A1 2/1997
EP 758755 A2 2/1997
EP 0889319 1/1999
EP 757346 B1 11/2001
EP 1953526 8/2008
EP 1004907 4/2009
EP 2381475 3/2015
JP S55-144226 11/1980
JP S57-116215 7/1982
JP S61-184427 8/1986
JP H03-197641 8/1991
JP H04-184241 7/1992
JP H05-119035 5/1993
JP 05333245 12/1993
JP 829726 2/1996
JP H09-502794 3/1997
JP HI0-73528 3/1998
JP 2003-505707 2/2003
JP 2004-500572 1/2004
JP 2004-341204 12/2004
JP 2005-017683 1/2005
JP 2005-315799 11/2005
JP 2008-534960 8/2008

(56) **References Cited**

FOREIGN PATENT DOCUMENTS

| | | | |
|---|---|---|---|
| JP | 2010-085194 | | 4/2010 |
| JP | 2010-286381 | | 12/2010 |
| JP | 2012-026837 | | 2/2012 |
| WO | WO 9307471 | | 4/1993 |
| WO | WO 9316368 | | 8/1993 |
| WO | WO 9429695 | | 12/1994 |
| WO | WO 9714066 | A2 | 4/1997 |
| WO | WO 0057173 | | 9/2000 |
| WO | WO 0127590 | | 4/2001 |
| WO | WO 0140764 | | 6/2001 |
| WO | WO 03012403 | | 2/2003 |
| WO | WO 2005033654 | | 4/2005 |
| WO | WO 2006013316 | | 2/2006 |
| WO | WO 2009095358 | | 8/2009 |
| WO | WO 2009098867 | | 8/2009 |
| WO | WO 2011026942 | | 3/2011 |
| WO | WO 2012056217 | | 5/2012 |
| WO | WO 2012177367 | | 12/2012 |
| WO | WO 2013013229 | | 1/2013 |
| WO | WO 2013093035 | | 6/2013 |
| WO | WO 2013/181453 | | 12/2013 |

OTHER PUBLICATIONS

Extended European Search Report for EP 13796734.5, mailed Mar. 18, 2016.

Goda et al., "Serial time-encoded amplified imaging for observation of fast dynamic phenomena," *Nature* 458:1145-1149. 2009.

International Search Report and Written Opinion for PCT/US2013/043453 mailed Dec. 20, 2013.

International Search Report and Written Opinion for PCT/US2014/067682 mailed Apr. 9, 2015.

Office Action issued in Chinese Patent Application No. 201380039184.6, dated Feb. 12, 2018.

Office Action issued in Corresponding Chinese Application No. 201611102428.2, dated May 18, 2020 (English Translation provided).

Office Action issued in Corresponding Chinese Patent Application No. 201480074396, dated Jun. 10, 2019 (English Translation).

Office Action issued in corresponding Chinses application No. 201611102428.2, dated Sep. 30, 2019.

Office Action issued in Japanese Patent Application No. 2015-515208, issued May 29, 2017 (English Translation Provided).

Office Action issued in Japanese Patent Application No. 2015-515208, dated May 2, 2018.

Office Action issued in Japanese Patent Application No. 2016-216891, dated Dec. 4, 2017 (English Translation).

Schmidt, B., "Ein lichtstarkes komafreies Spiegelsystem," *Mitteilungen der Haburger Sternwarte in Bergedorf* 7(36):15-17, 1932.

Smiley, C. H., "The Schmidt Camera," *Popular Astronomy* 44:415-421, 1936.

Office Communication issued in U.S. Appl. No. 17/980,669, dated Mar. 27, 2023.

English translation of Office Action issued in corresponding Japanese Patent Application No. 2020-206548 on dated Nov. 29, 2021.

English translation of Office Communication issued in Japanese Patent Application No. 2022-090719, dated Aug. 10, 2023.

Extended European Search Report issued by the European Patent Office in corresponding European Application No. 24151670.7 dated Apr. 9, 2024.

Shapiro, H. M. (2003). Practical Flow Cytometry Fourth Edition. John Wiley & Sons.

International Society for Advancement of Cytometry, "CYTO 2012", ISAC XXVII International Congress, Leipzig, Germany, Jun. 2012, 272 pages.

* cited by examiner

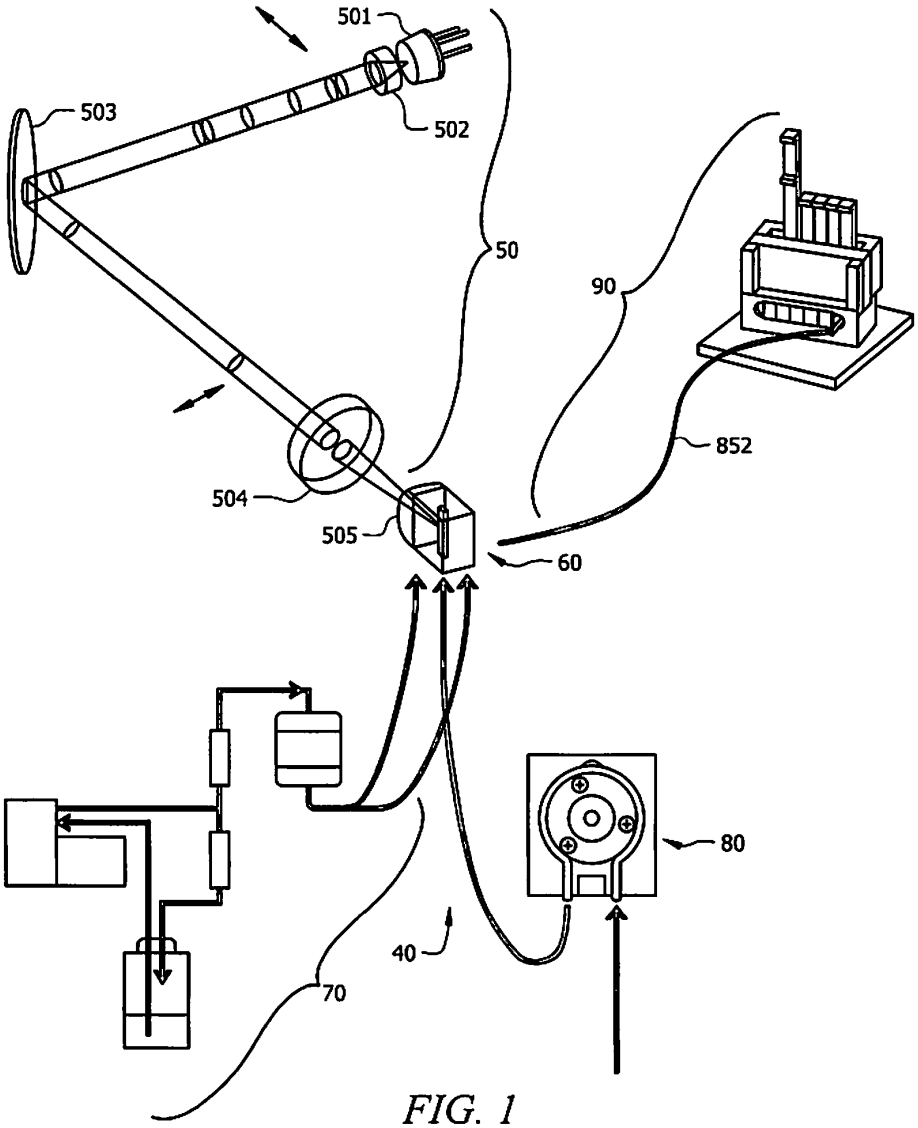


FIG. 1

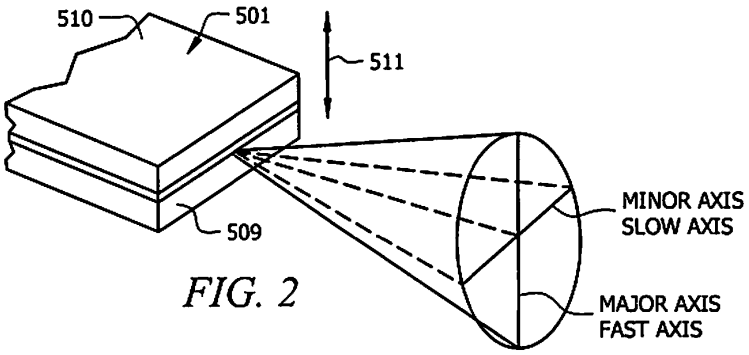


FIG. 2

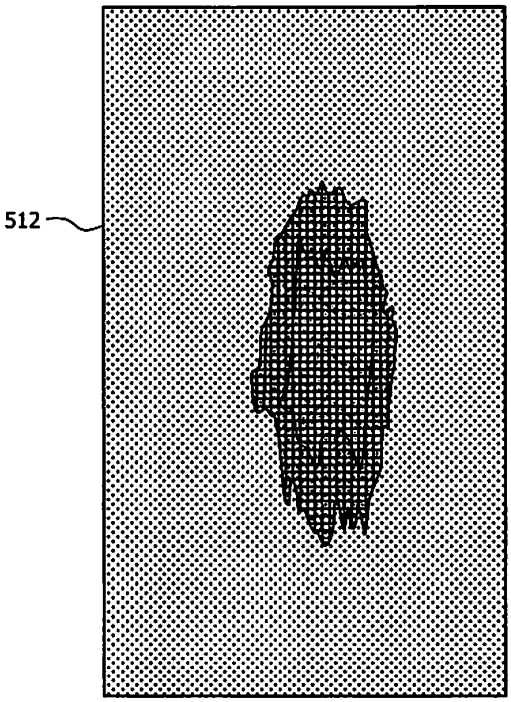


FIG. 2A

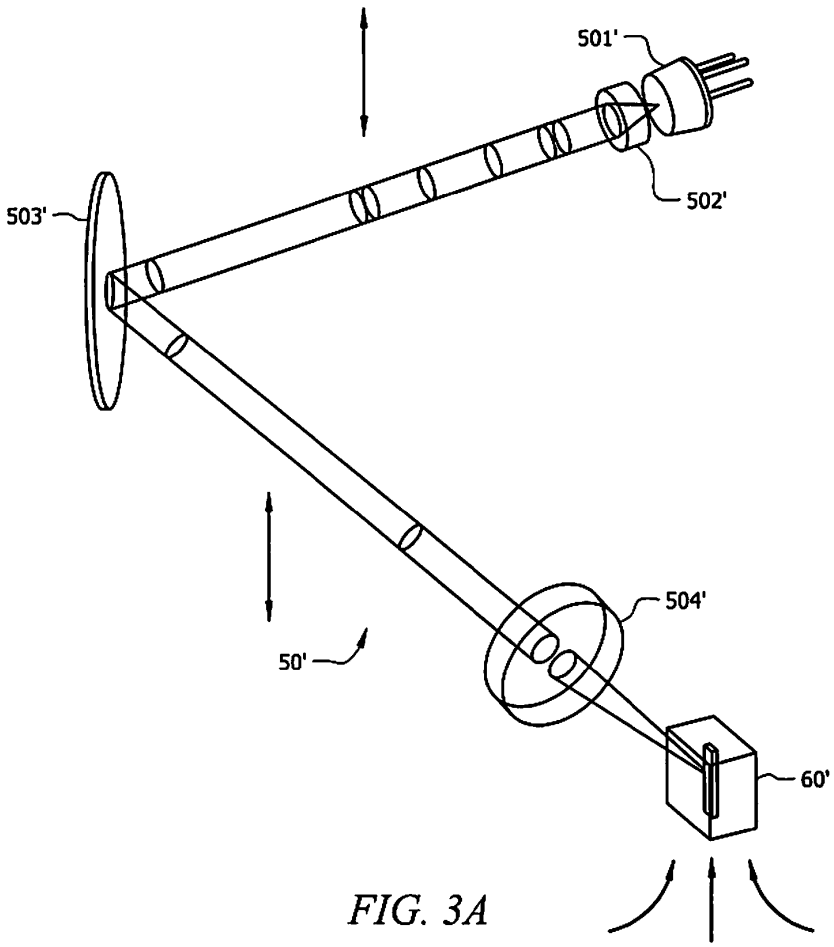


FIG. 3A

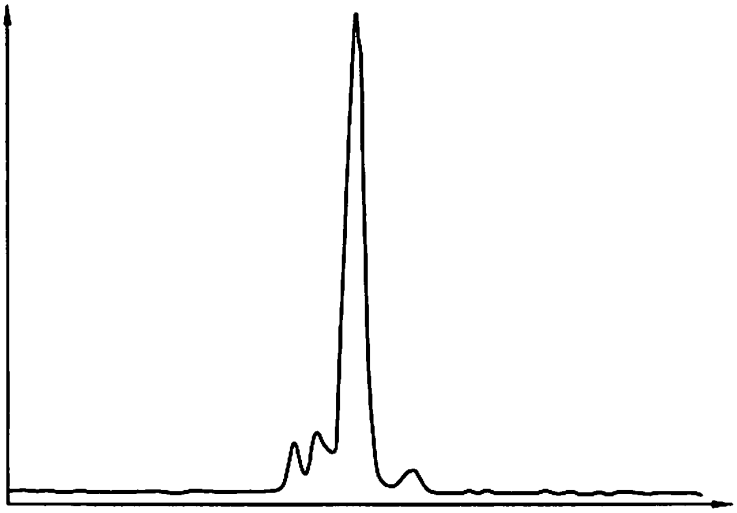

FIG. 3B

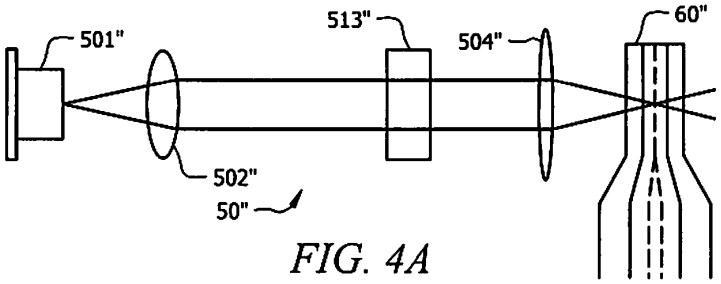


FIG. 4A

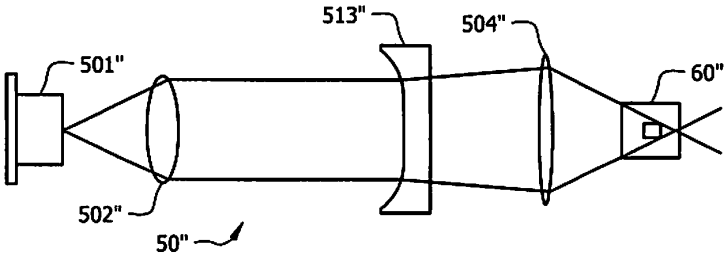


FIG. 4B

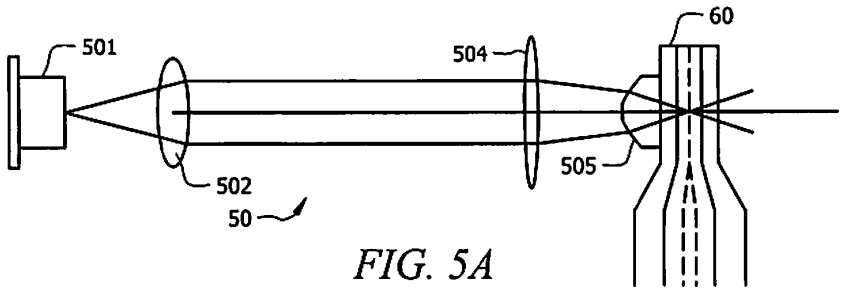


FIG. 5A

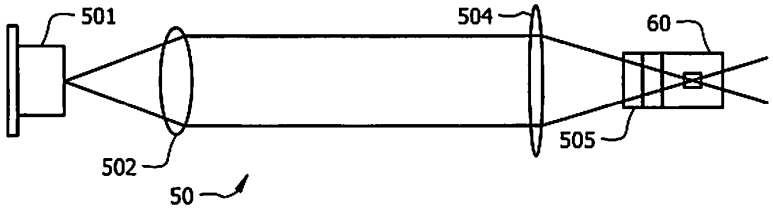


FIG. 5B

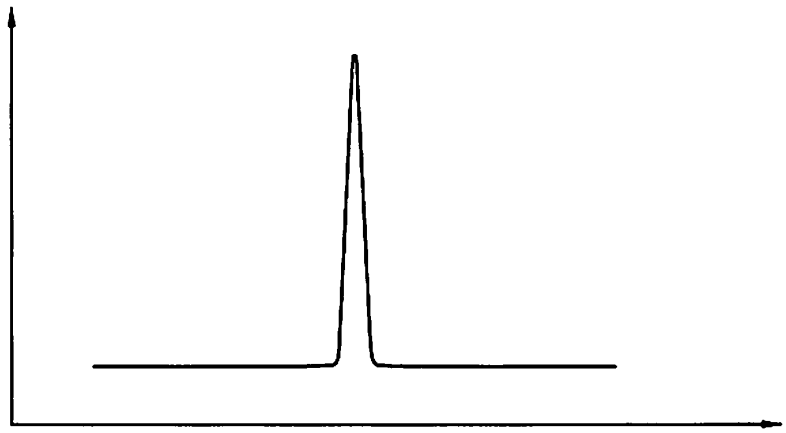

FIG. 5C

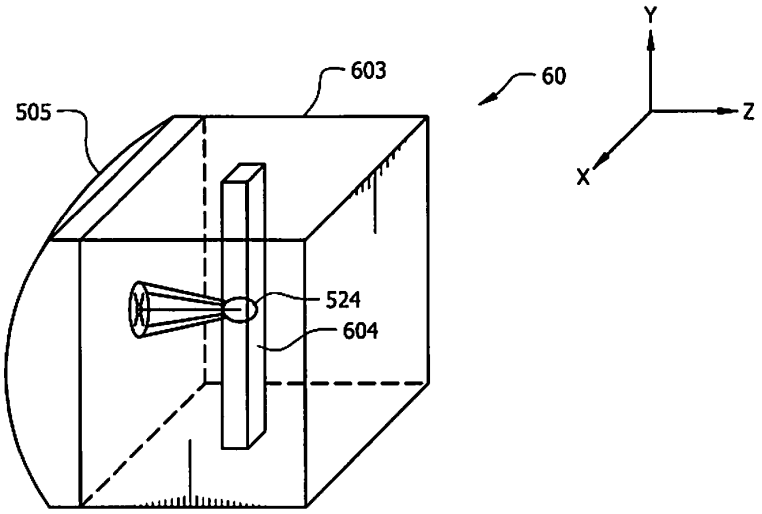


FIG. 5D

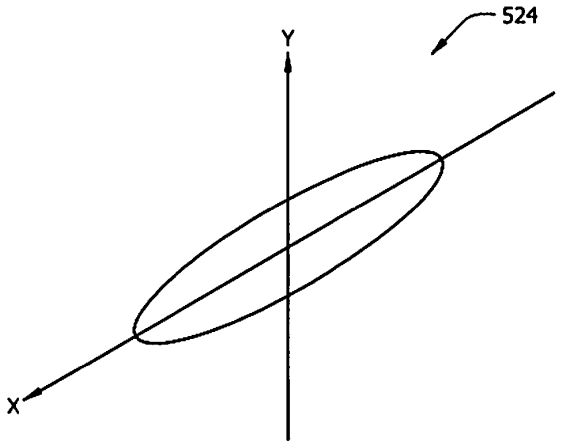


FIG. 5E

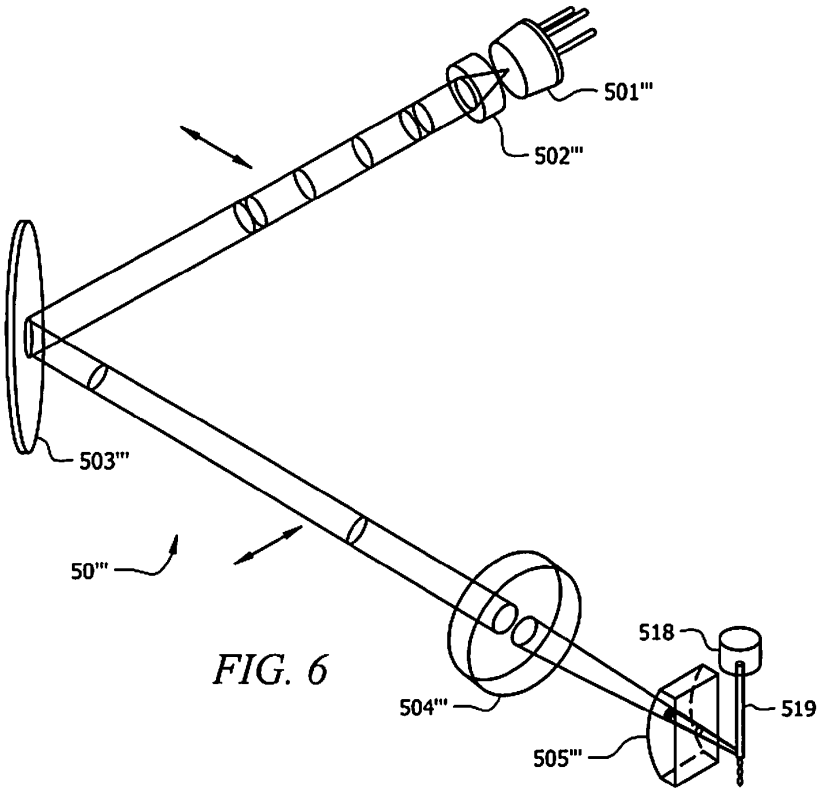


FIG. 6

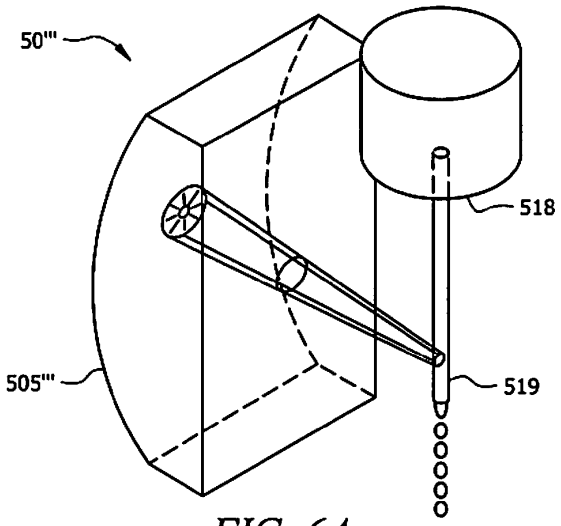


FIG. 6A

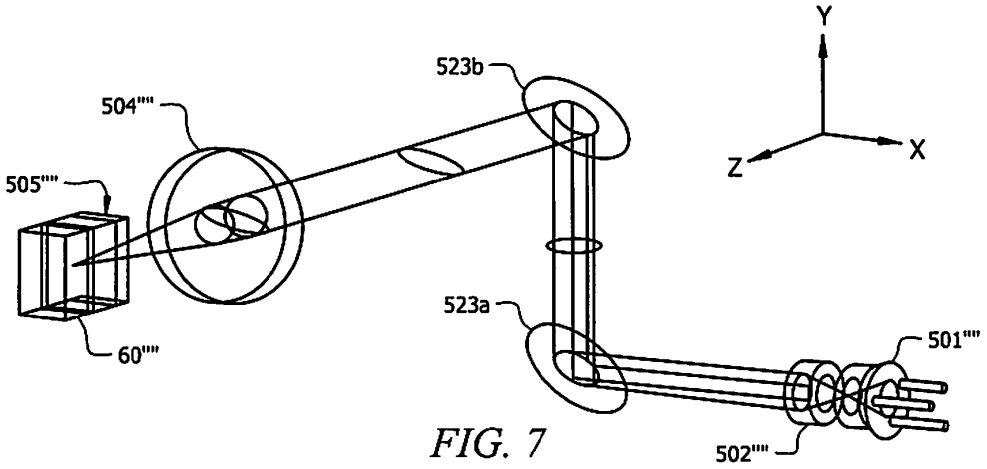


FIG. 7

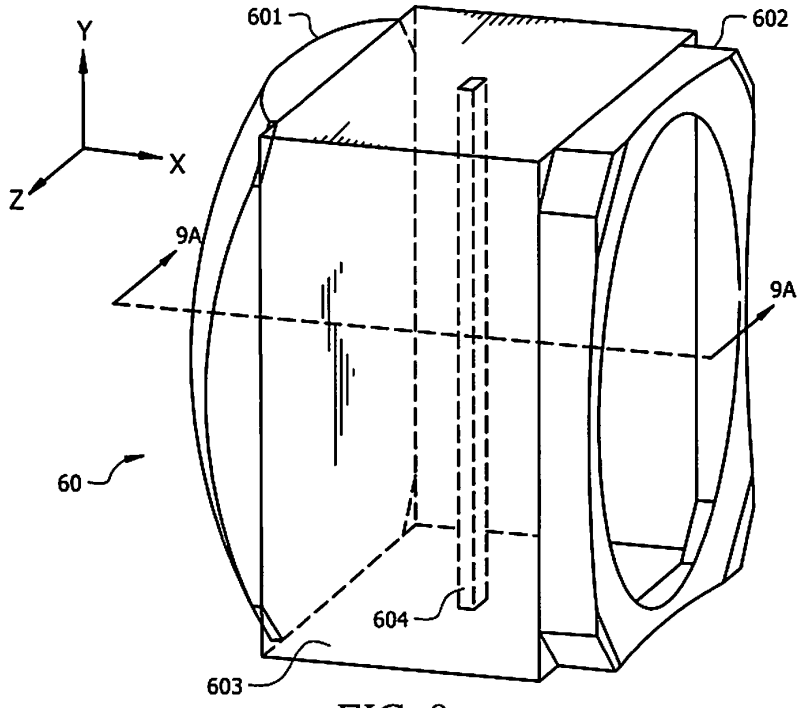


FIG. 8

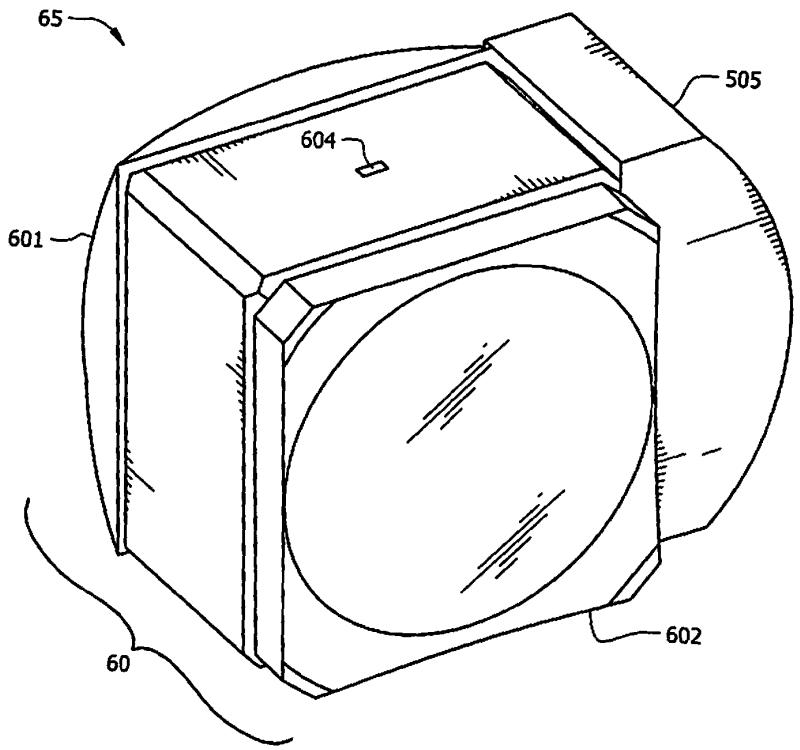


*FIG. 8A*

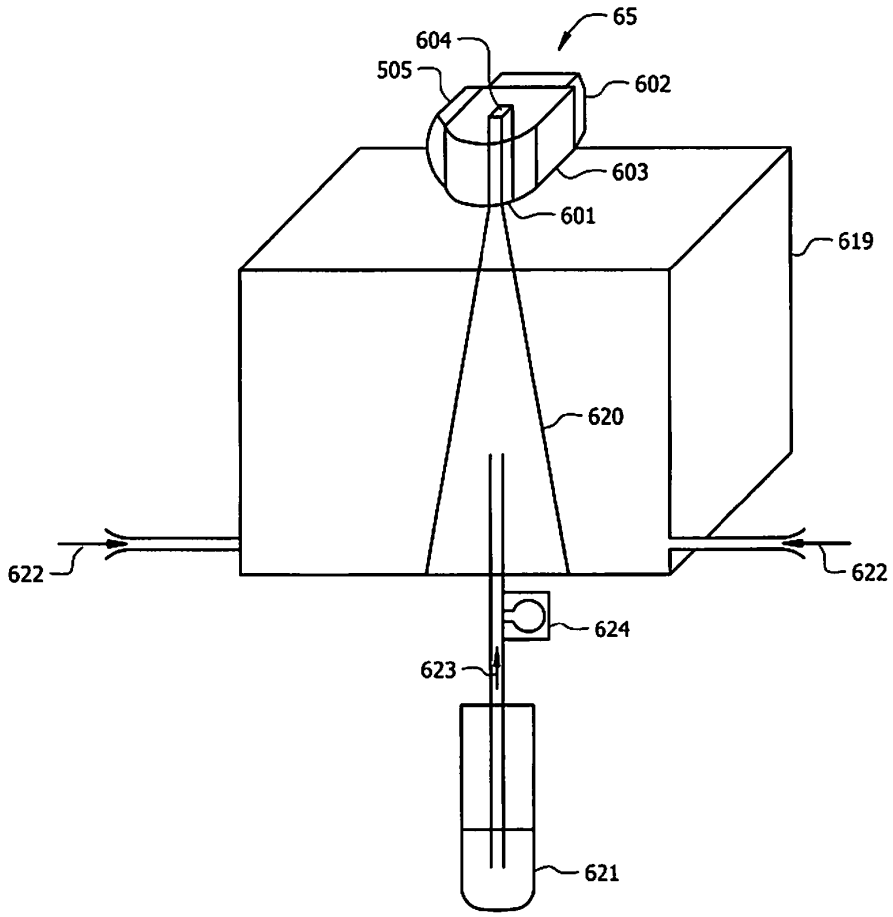


*FIG. 8B*

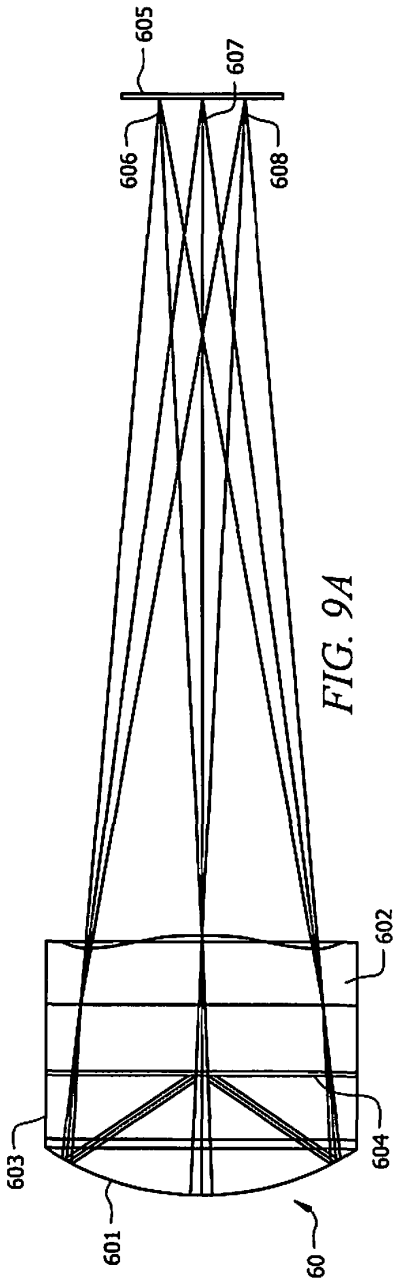


FIG. 9A

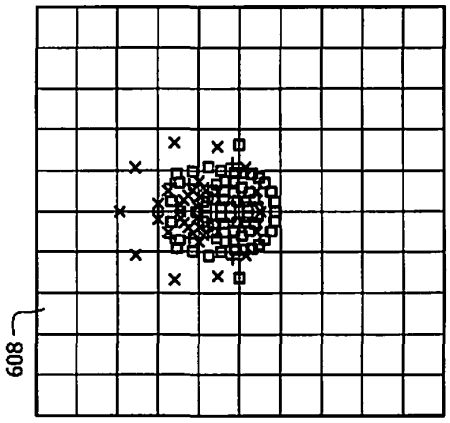


FIG. 9B3

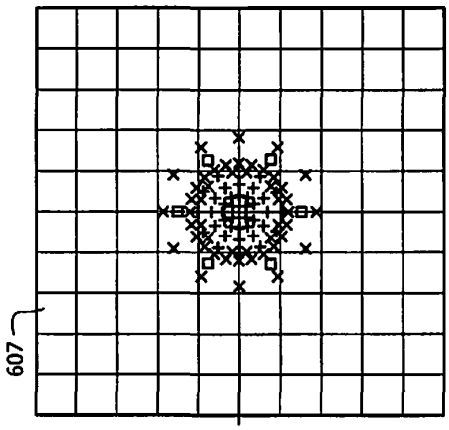


FIG. 9B2

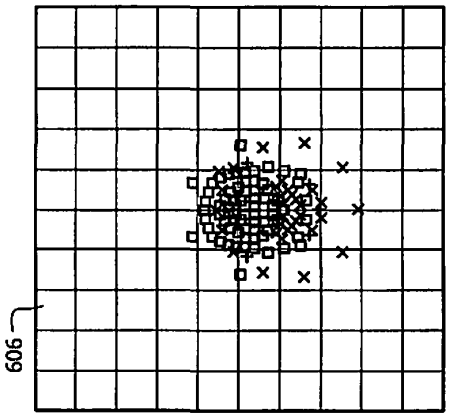


FIG. 9B1

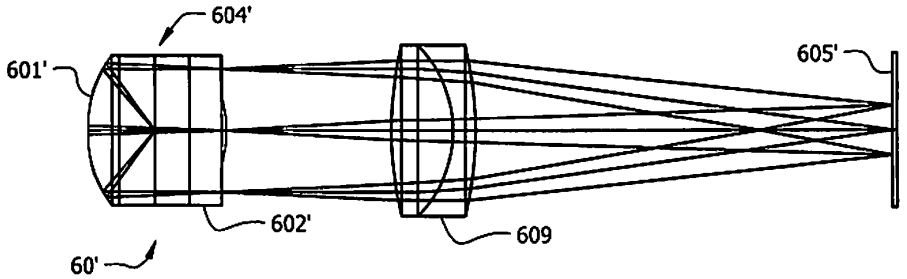


FIG. 10

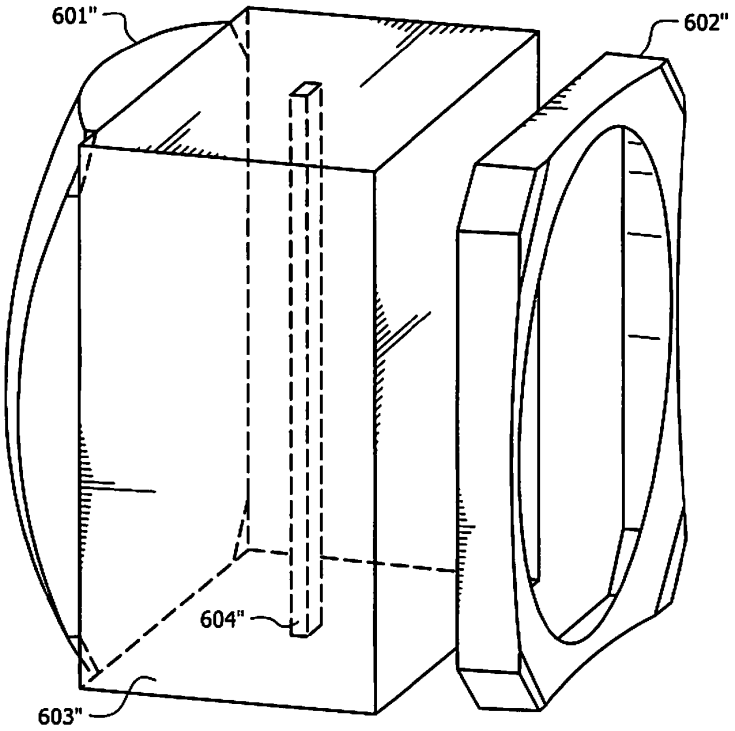


FIG. 11

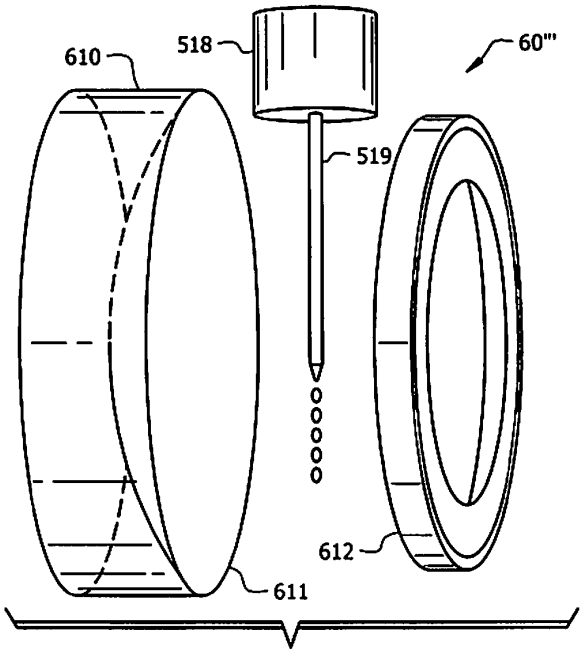


FIG. 12

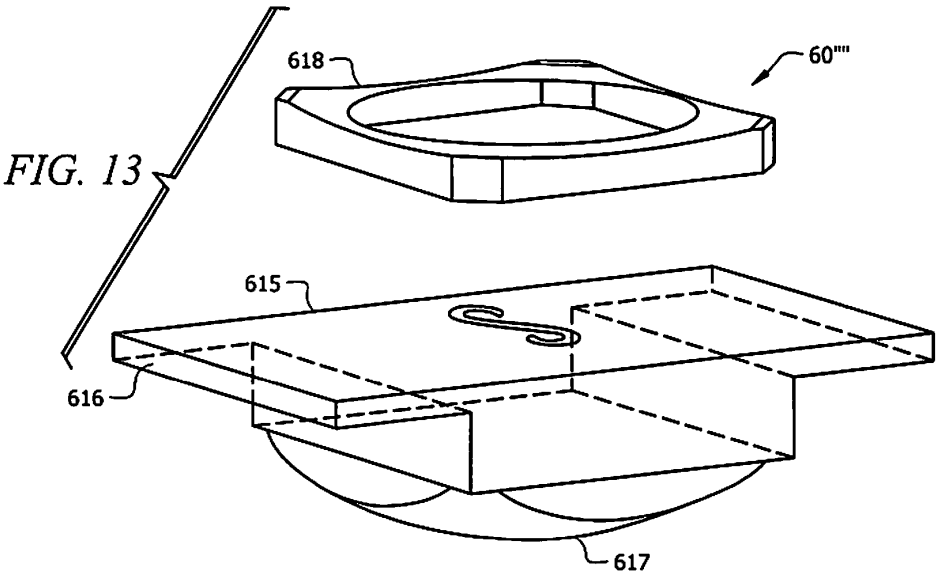


FIG. 13

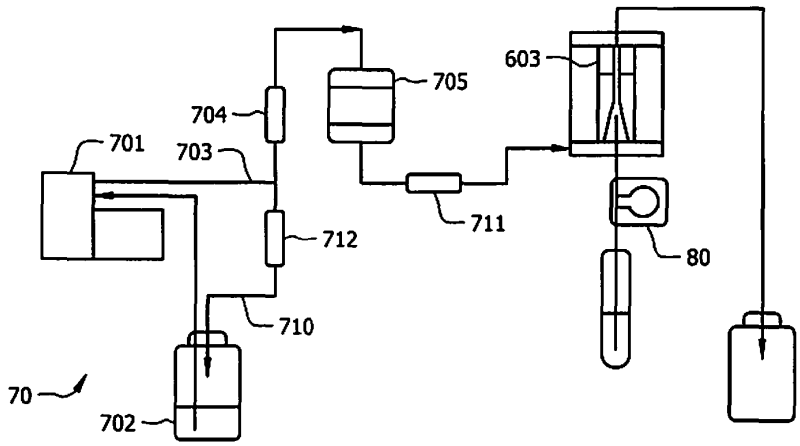
603
705
704
701
703
711
712
80
710
70
702

*FIG. 14*

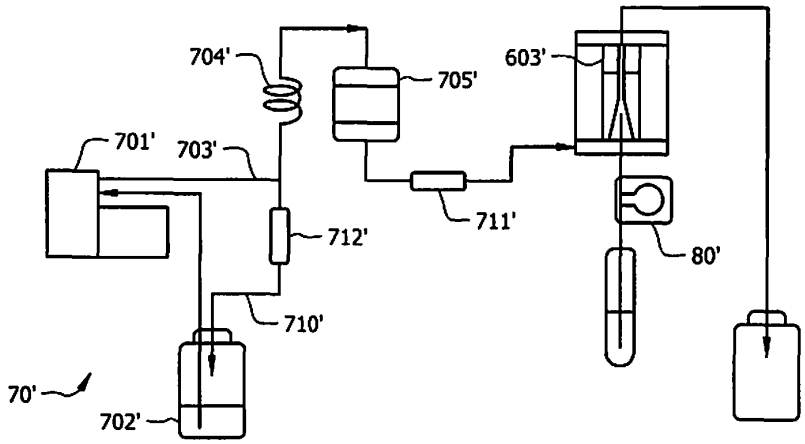
704'
603'
705'
701'
703'
711'
712'
80'
710'
70'
702'

*FIG. 15*

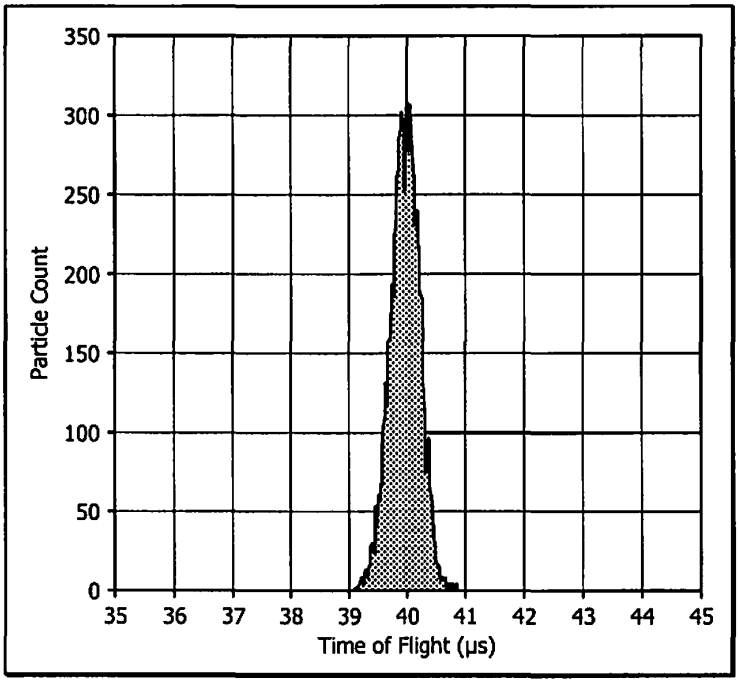


*FIG. 16A*

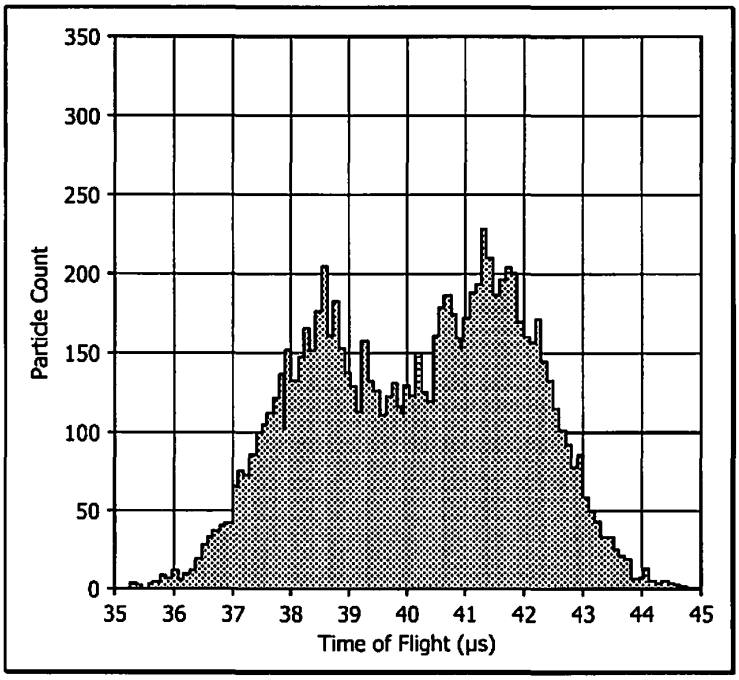


*FIG. 16B*

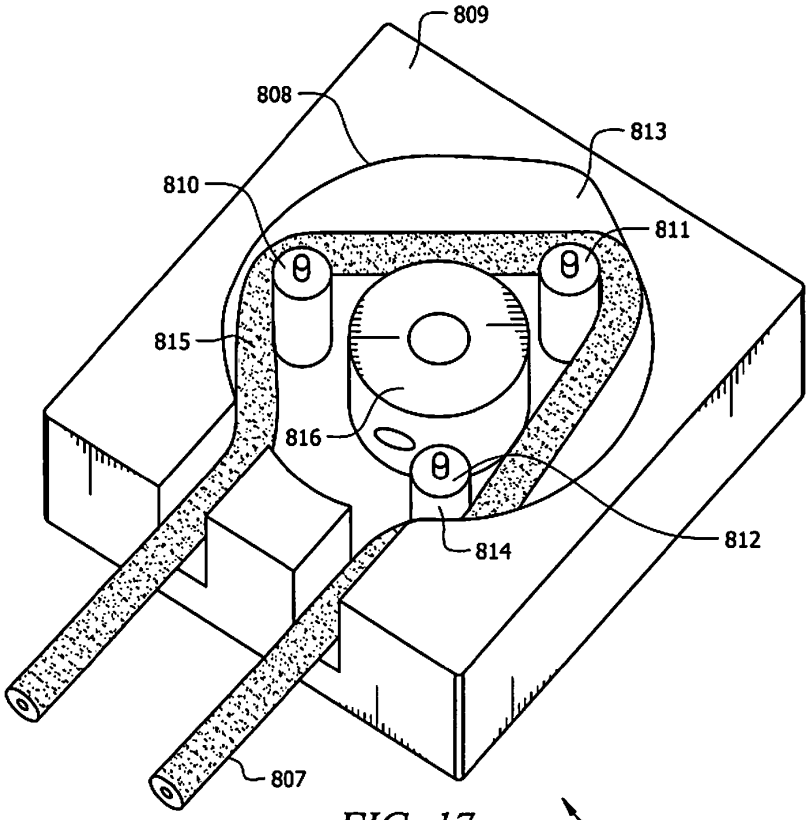


FIG. 17

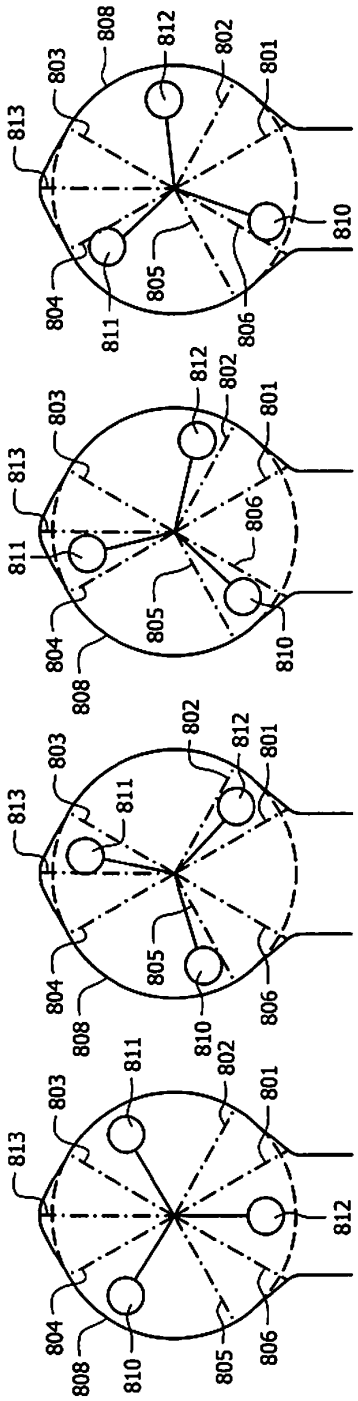


FIG. 18A




FIG. 18B




FIG. 18C




FIG. 18D

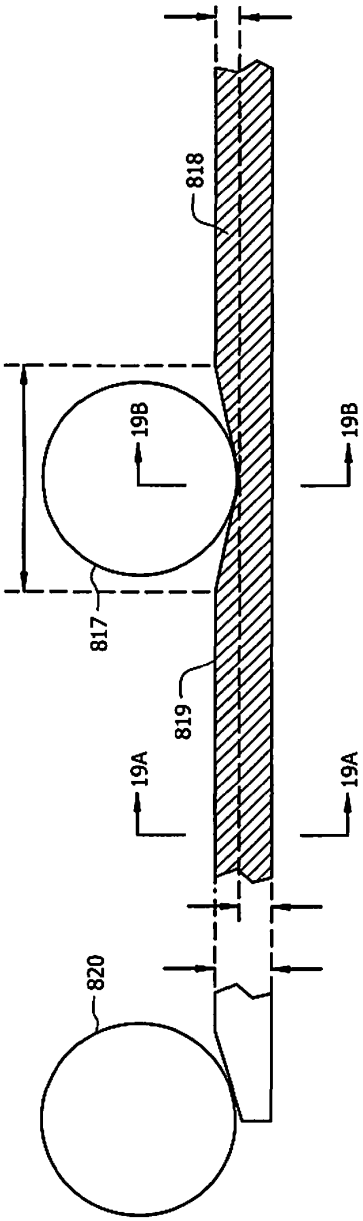


FIG. 19

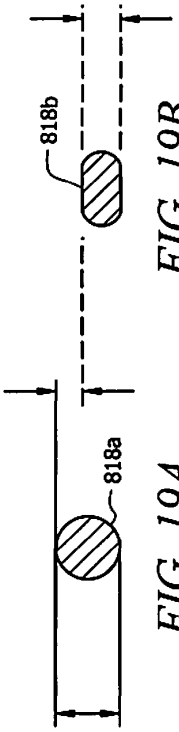


FIG. 19B

FIG. 19A

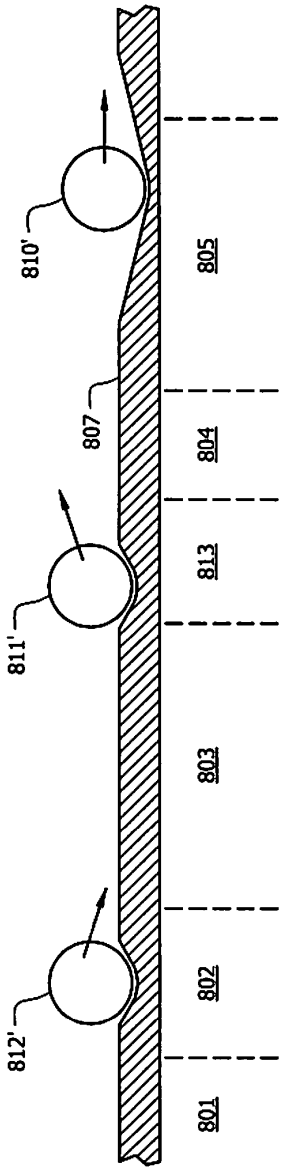


FIG. 20A

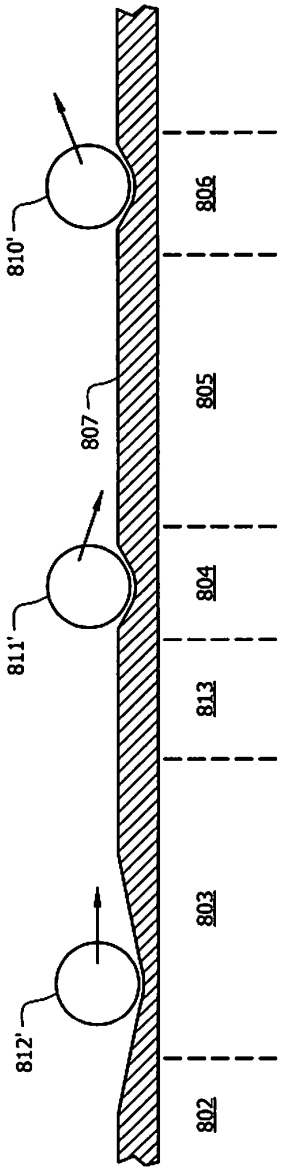


FIG. 20B

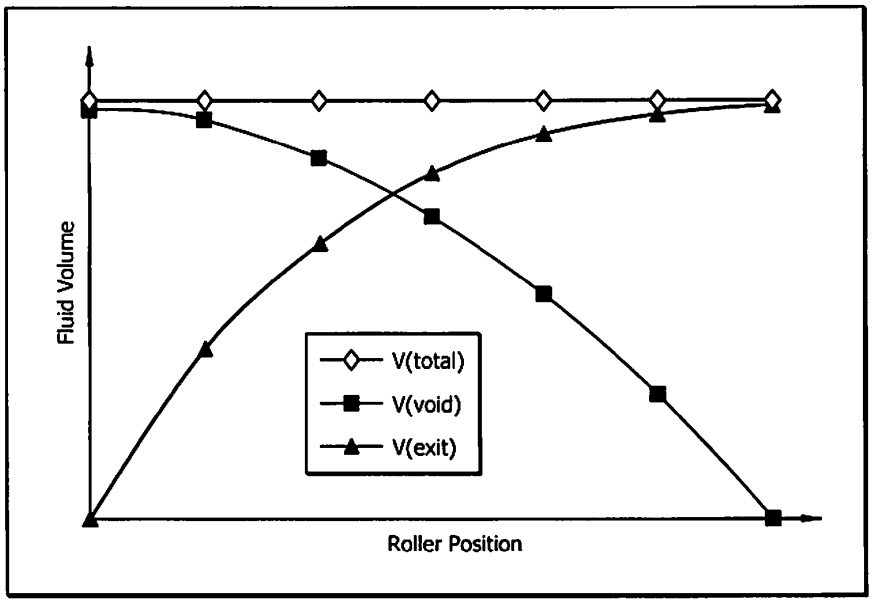


*FIG. 21*

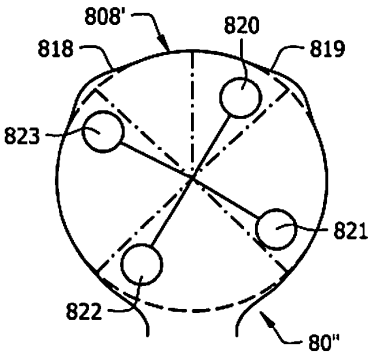


*FIG. 22*

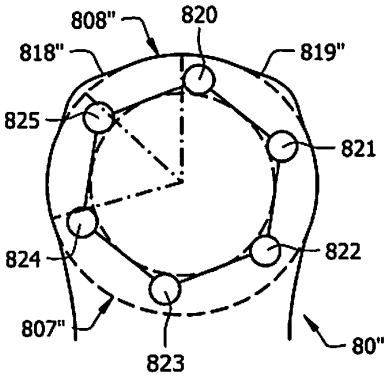


*FIG. 23*

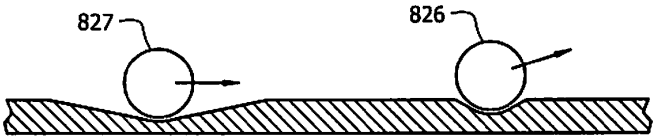


FIG. 24A

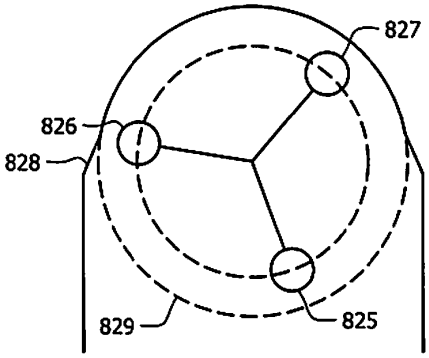


FIG. 24B

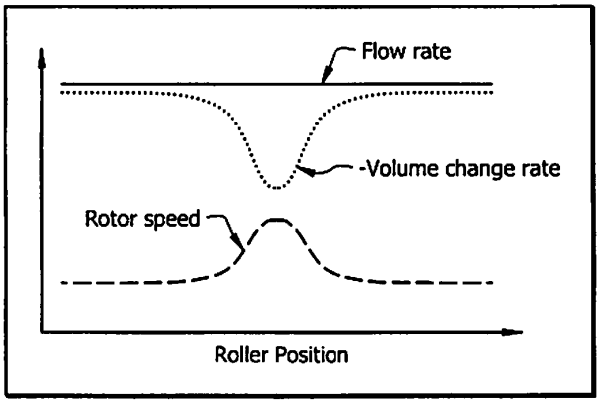


FIG. 24C

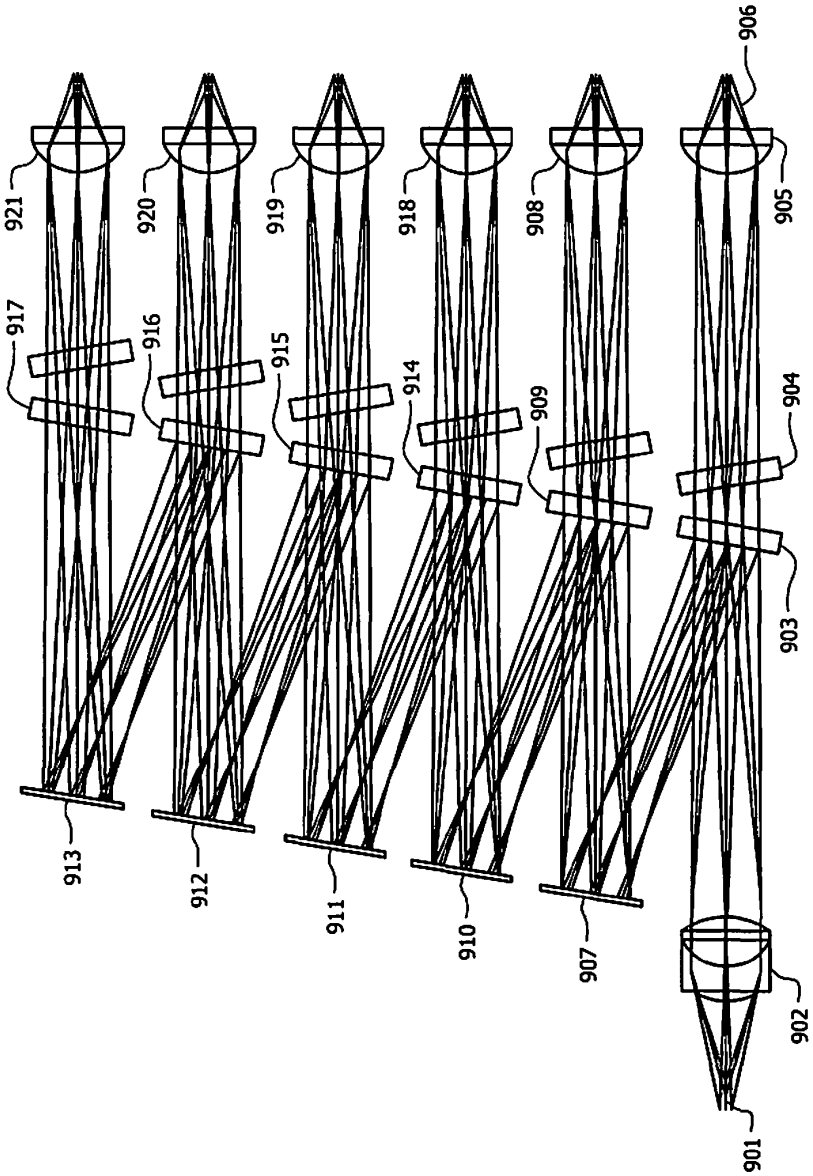
921
917
913
920
916
912
919
915
911
918
914
910
908
909
907
906
905
904
903
902
901

FIG. 25

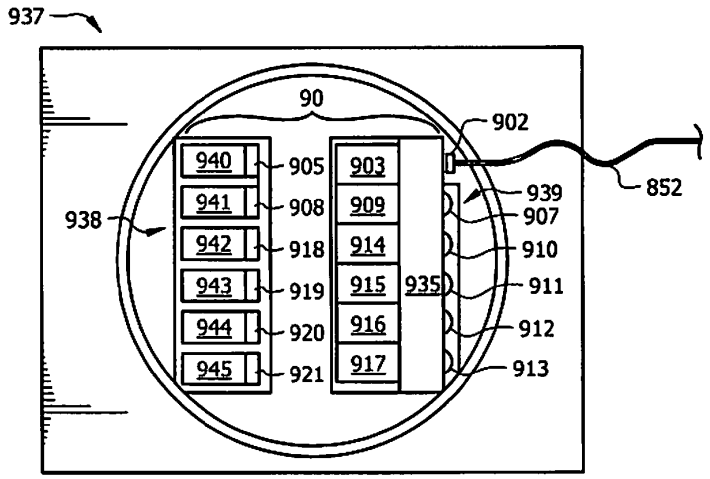


*FIG. 25A*

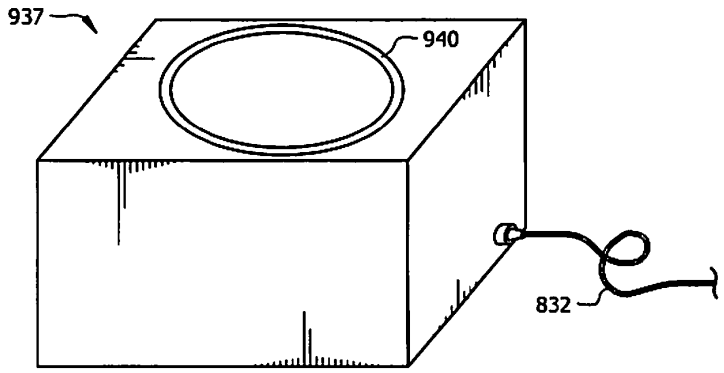


*FIG. 25B*

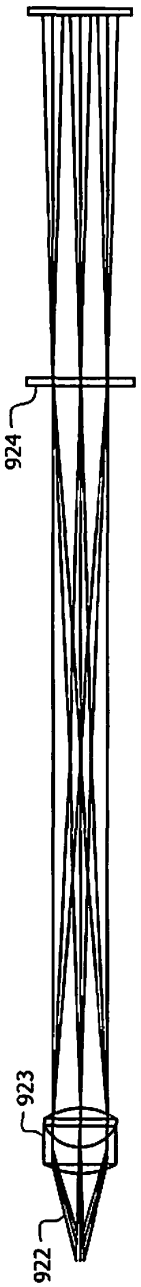


FIG. 26

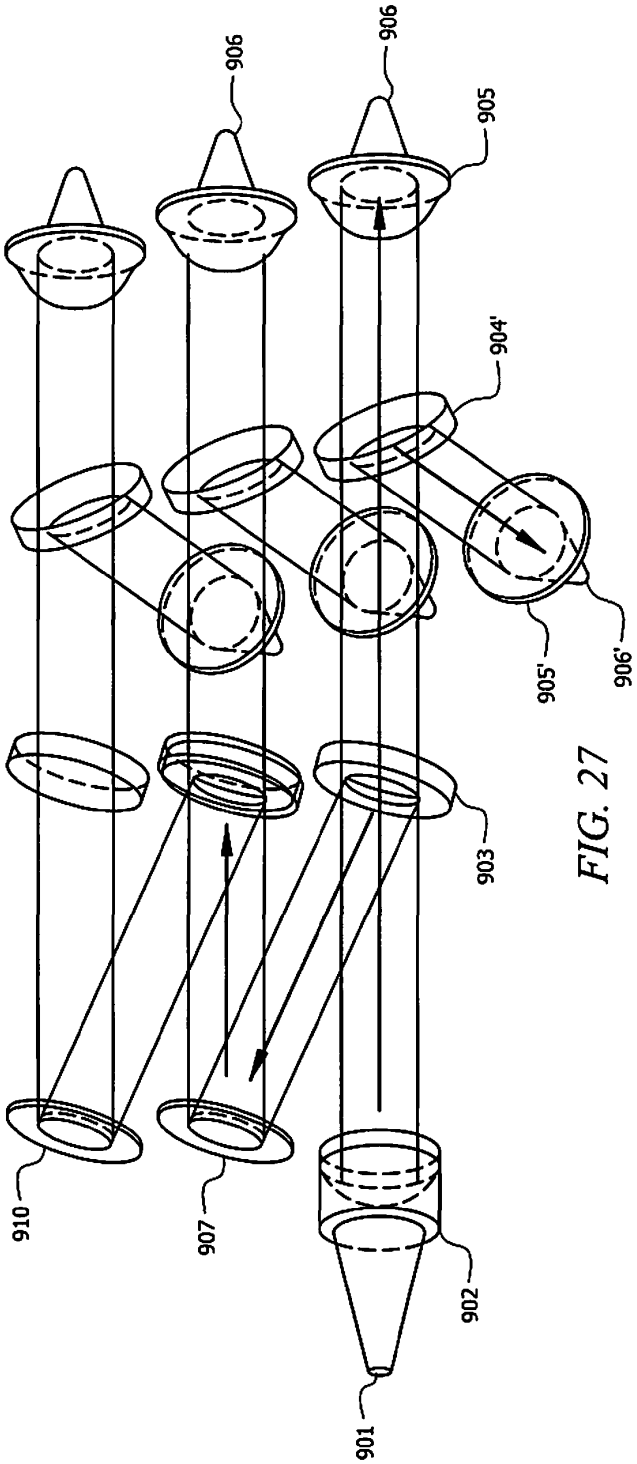


FIG. 27

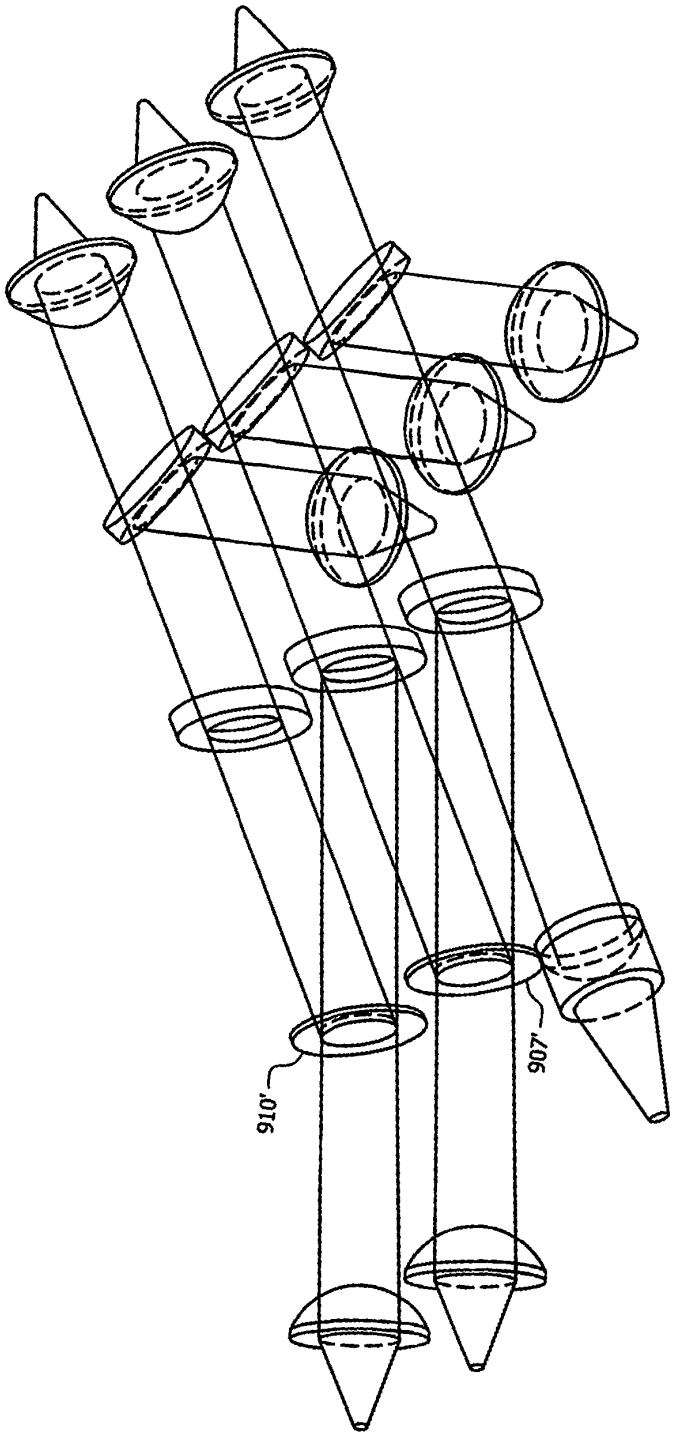


FIG. 28

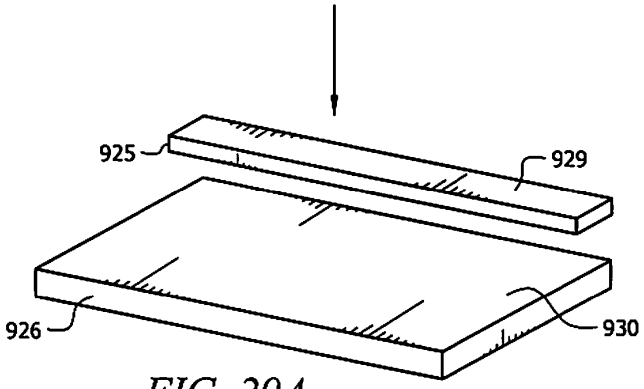


FIG. 29A

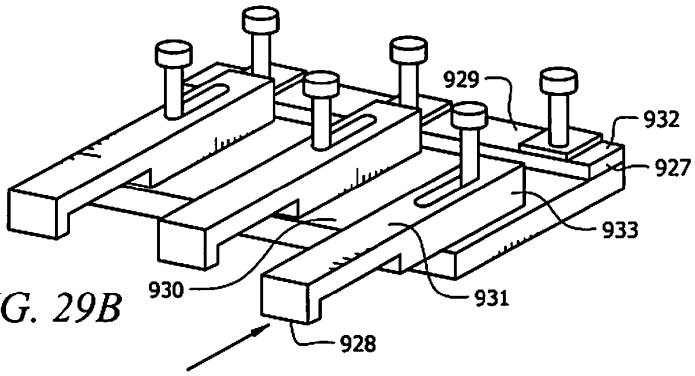


FIG. 29B

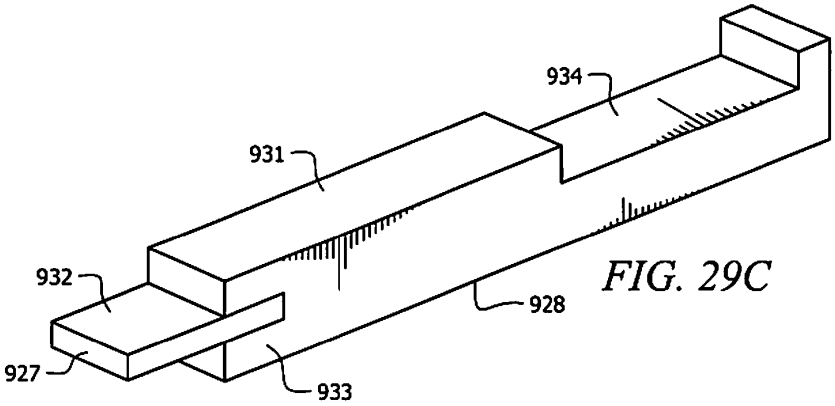


FIG. 29C

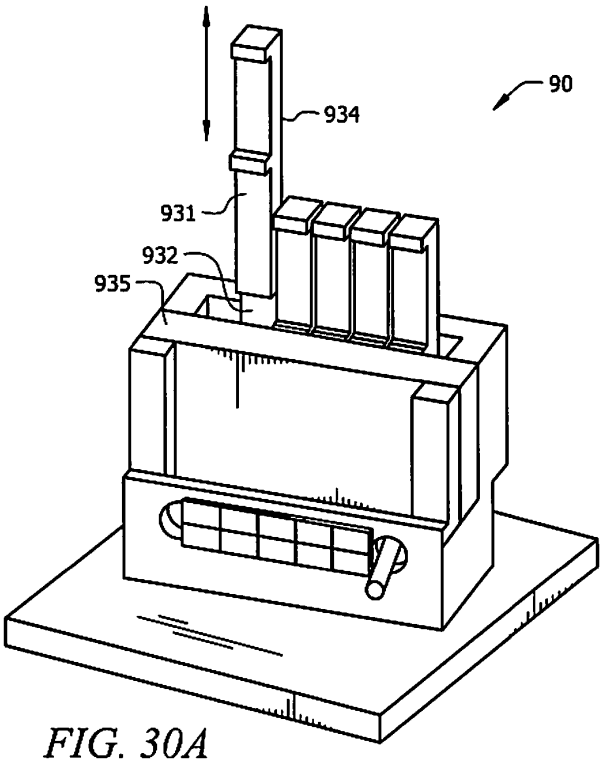


FIG. 30A

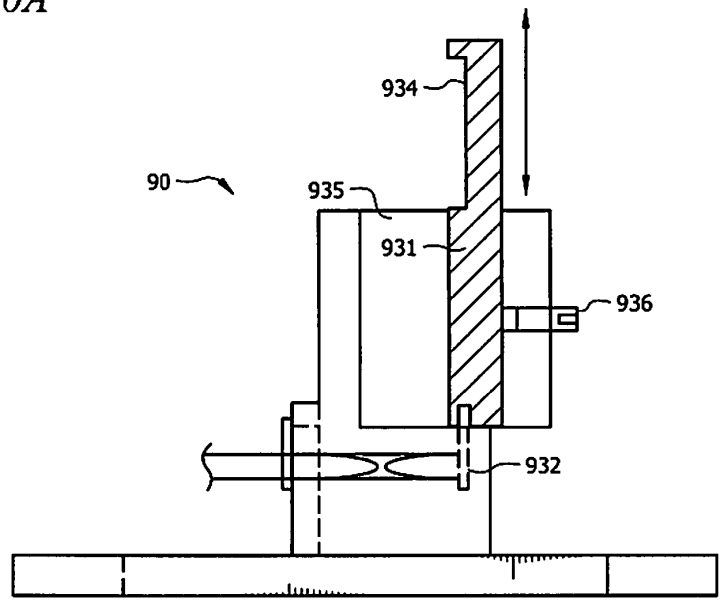


FIG. 30B

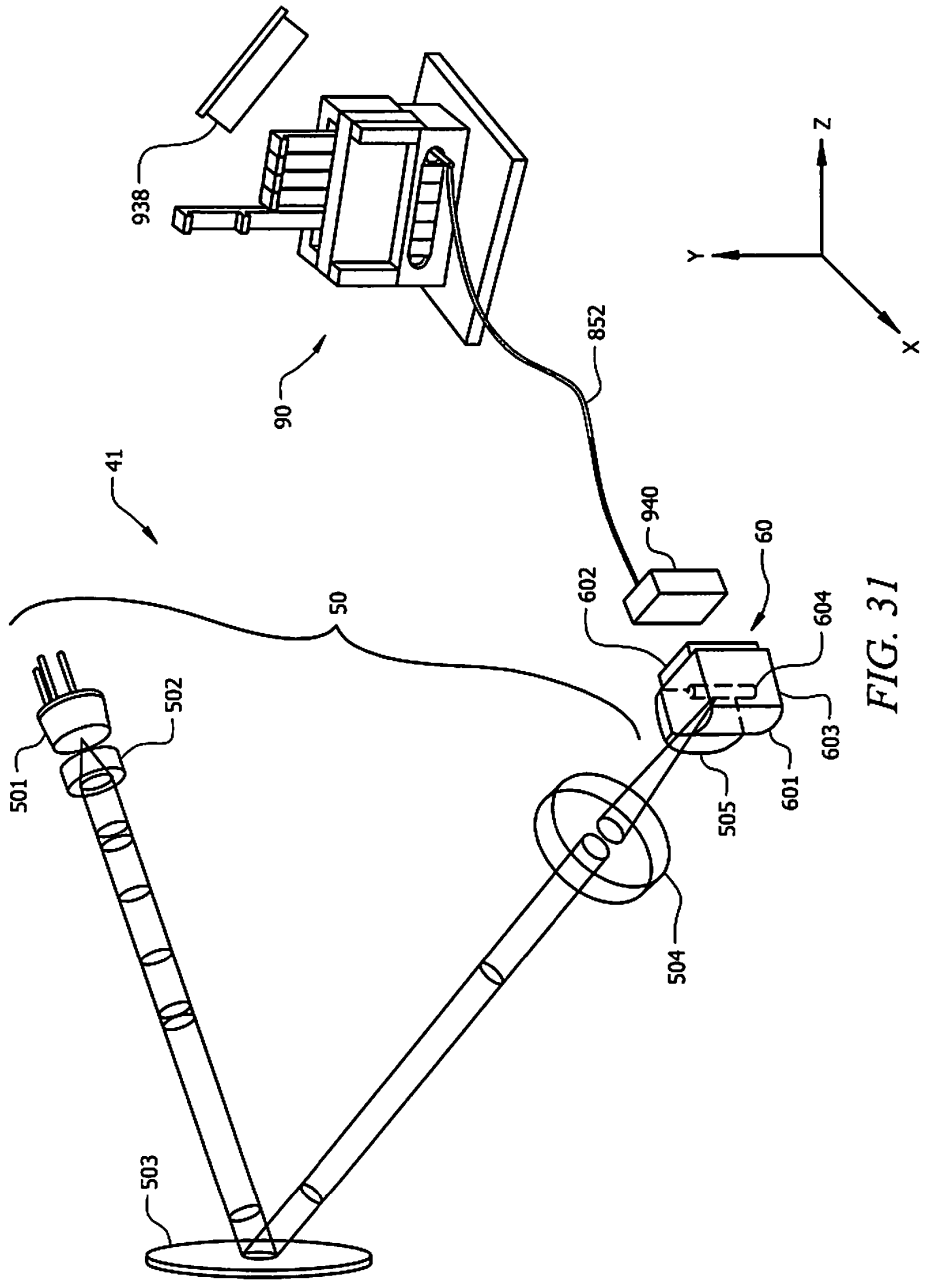


FIG. 31

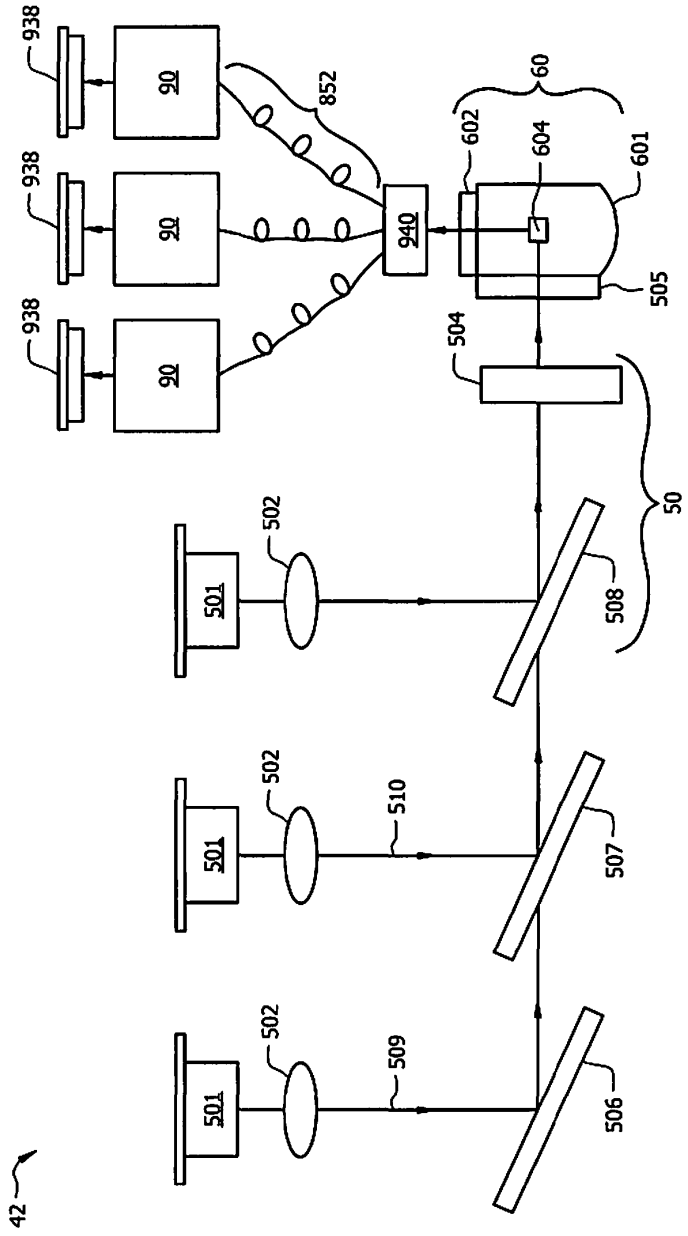
938
938
938
90
90
90
852
940
602
604
601
60
505
504
50
508
507
506
501
501
501
502
502
502
510
509
42

FIG. 32

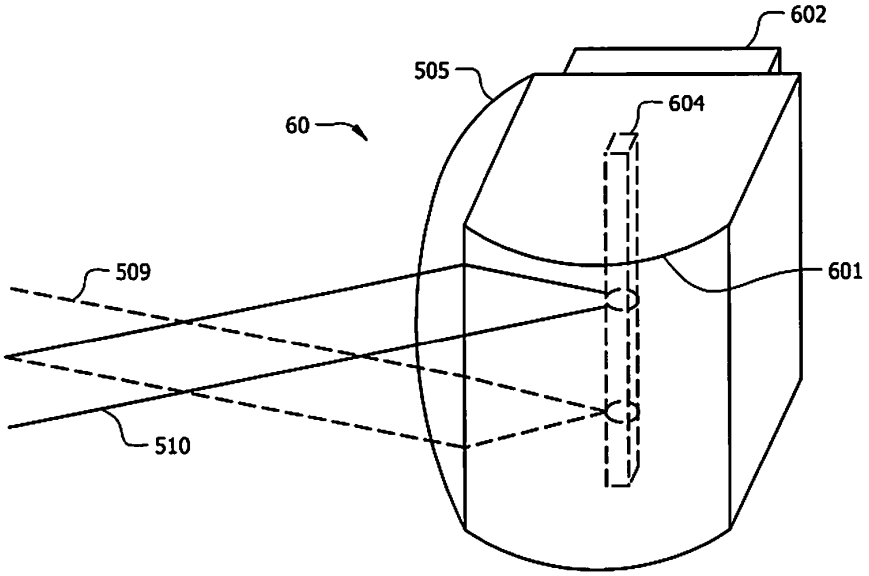


*FIG. 33*

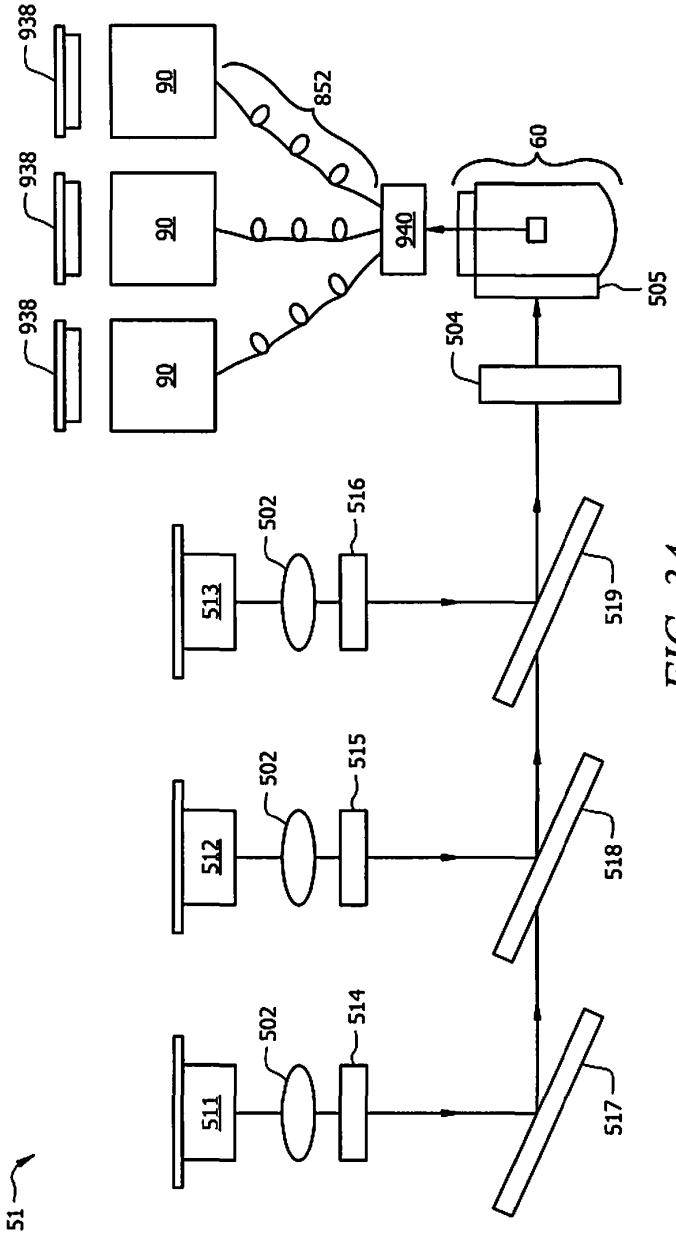
938
938
938
90
90
90
852
940
60
505
504
513
512
511
502
502
502
516
515
514
519
518
517
51

FIG. 34

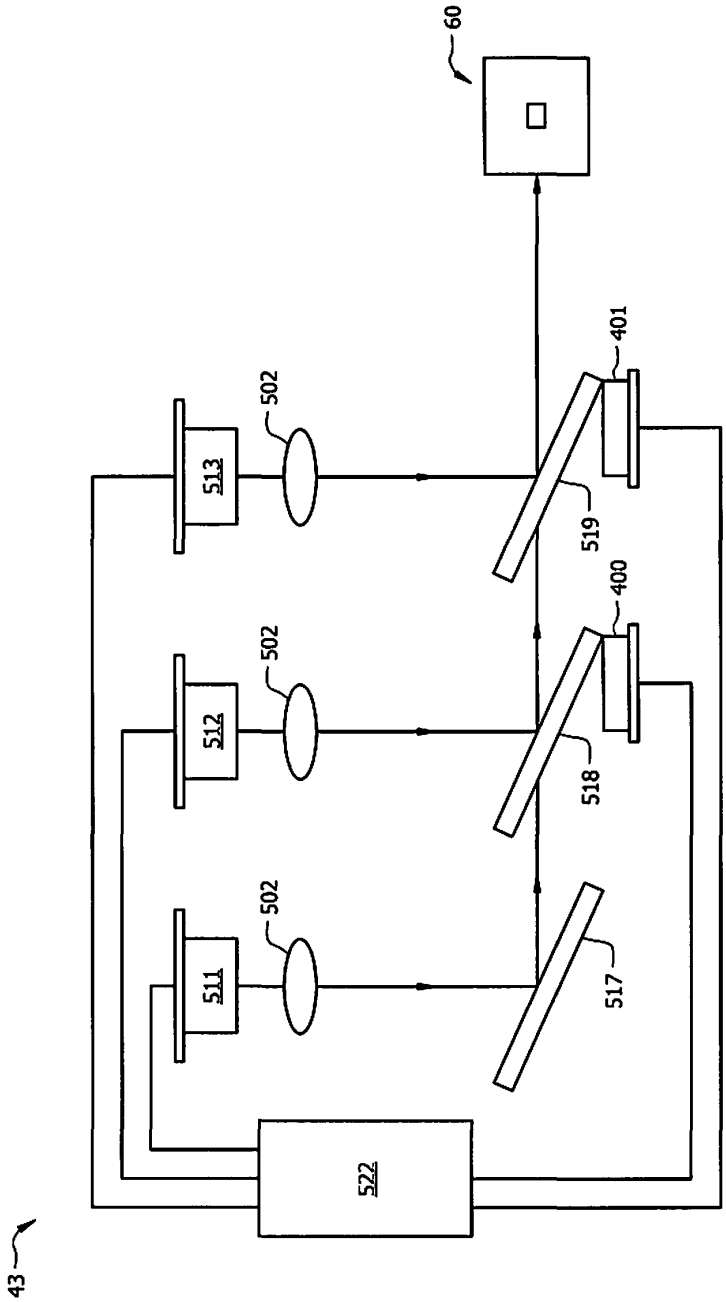


FIG. 35

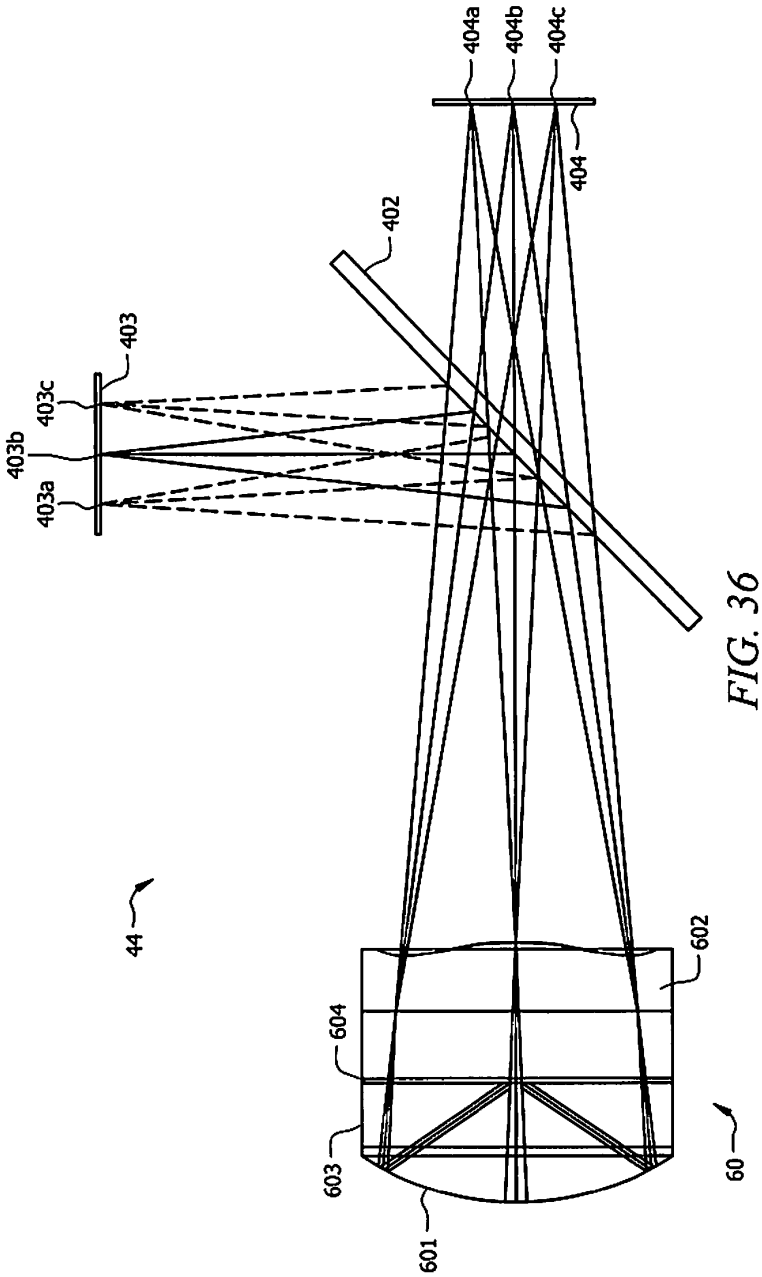


FIG. 36

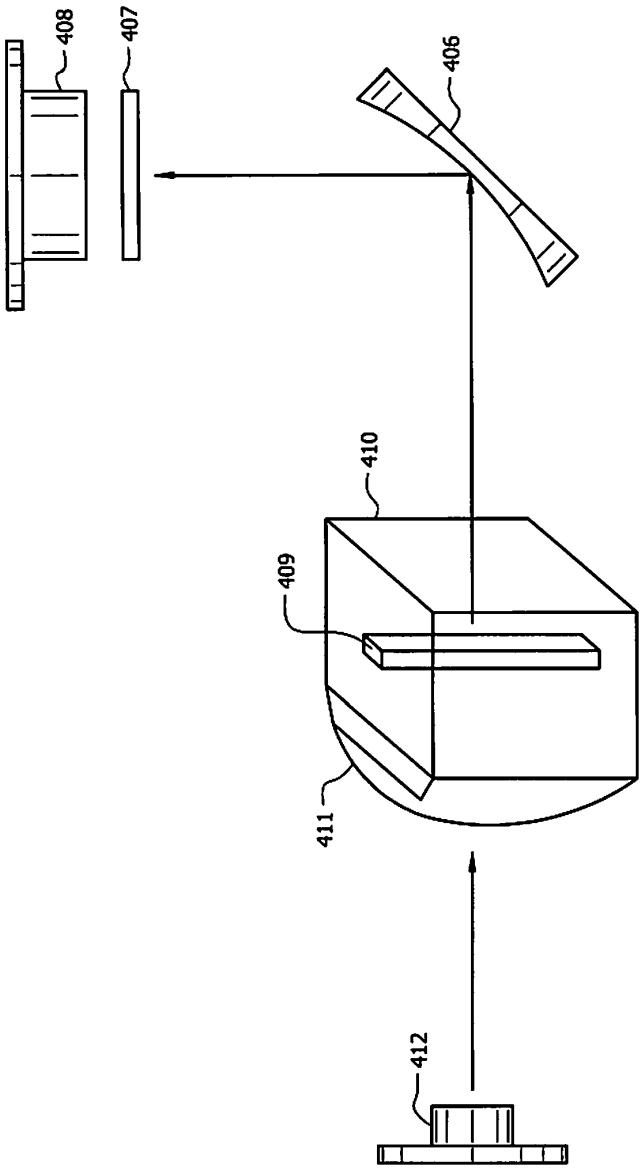


FIG. 37

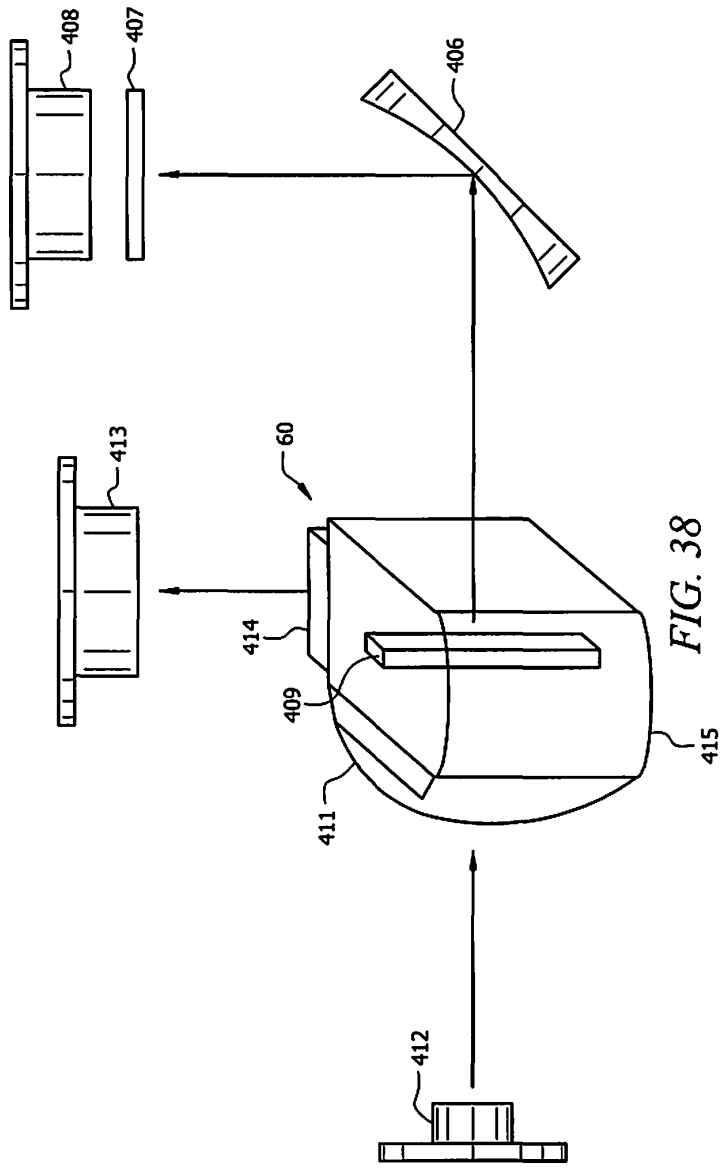


FIG. 38

# FLOW CYTOMETER

## CROSS-REFERENCE TO RELATED APPLICATIONS

This application is a continuation of U.S. patent application Ser. No. 15/638,477, which is a divisional application of U.S. patent application Ser. No. 14/455,102 entitled "Flow Cytometer," filed Nov. 26, 2014, and issued as U.S. Pat. No. 9,746,412, which claims the benefit of priority of U.S. Provisional Patent Application Ser. No. 61/911,859 entitled "Flow Cytometer," filed on Dec. 4, 2013. U.S. patent application Ser. No. 14/551,012 is also a continuation-in-part of International Patent Application Serial No. PCT/US2013/043453 entitled "Flow Cytometer," filed on May 30, 2013, which claims the benefit of priority under 35 U.S.C. 119 to U.S. Provisional Patent Application Ser. No. 61/653,245 entitled "Pulseless Peristaltic Pump," filed on May 30, 2012, U.S. Provisional Patent Application Ser. No. 61/653,328 entitled "Composite Microscope Objective with a Dispersion Compensation Plate," filed on May 30, 2012, U.S. Provisional Patent Application Ser. No. 61/715,819 entitled "Wavelength Division Multiplexing for Extended Light Source," filed on Oct. 18, 2012, U.S. Provisional Patent Application Ser. No. 61/715,836 entitled "Diode Laser Based Optical Excitation System," filed on Oct. 19, 2012, and U.S. Provisional Patent Application Ser. No. 61/816,819 entitled "A Simple Fluidic System for Supplying Pulsation Free Liquid to Flow Cell," filed on Apr. 29, 2013. All of the above-identified applications are incorporated herein by reference in their entirety.

## BACKGROUND

### Technical Field

The present disclosure relates generally to the technical field of flow cytometry and, more particularly, to the structure and operation of an improved flow cytometer together with various individual subassemblies included therein.

### Background

Flow cytometry is a biophysical technique employed in cell counting, sorting, biomarker detection and protein engineering. In flow cytometry, cells suspended in a stream of liquid pass through an electronic detection apparatus. Flow cytometry allows simultaneous multiparametric analysis of physical and/or chemical characteristics of up to thousands of cells per second.

Flow cytometry has various applications including in the fields of molecular biology, pathology, immunology, plant biology and marine biology. Flow cytometry also has broad application in medicine (especially in transplantation, hematology, tumor immunology and chemotherapy, prenatal diagnosis, genetics and sperm sorting for sex preselection). In marine biology, the autofluorescent properties of photosynthetic plankton can be exploited by flow cytometry in characterizing abundance and community composition. In protein engineering, flow cytometry is used in conjunction with yeast display and bacterial display to identify cell surface-displayed protein variants with desired properties. A common variation of flow cytometry is physically sorting particles based on their properties thereby purifying a population of interest.



## SUMMARY OF DISCLOSURE

The present disclosure provides an improved flow cytometer together with various improved components included therein, as well as component groups with interacting components.

In certain embodiments, the present disclosure provides a simple and reliable diode laser based optical system capable of delivering a focused laser beam of elliptical cross section with a Gaussian like intensity distribution along its minor axis and a width along major axis optimized for flow cytometric applications.

In certain embodiments, the present disclosure provides an imaging quality microscope objective that is easy to manufacture and has long working distance, large numerical aperture, large field of view and minimal chromatic aberration.

In certain embodiments, the present disclosure provides a simple fluidics system for flow cytometers that is not only reliable, compact and easy to manufacture, but also capable of supporting velocity critical applications such as in instruments with multiple spatially separated excitation laser beams or in droplet sorters.

In certain embodiments, the present disclosure provides a simple design for a peristaltic pump providing a pulseless liquid flow.

In certain embodiments, the present disclosure provides a peristaltic pump with minimal pulsation.

In certain embodiments, the present disclosure provides a peristaltic pump that is simple to manufacture and operate.

In certain embodiments, the present disclosure provides a device capable of collimating a light beam from an extended light source over an extended distance without significantly expanding the beam diameter.

In certain embodiments, the present disclosure provides a Wavelength Division Multiplexing (WDM) system to separate a light beam into multiple colored bands. The WDM system may be compatible with low noise semiconductor detectors. In addition, due to the diversity of fluorescent probes, the WDM system may be reconfigurable.

According to an exemplary embodiment, a flow cytometer may include:

1. a Laser Diode (LD) based optical subsystem for impinging a beam of light upon particles passing through a viewing zone;
2. a composite microscope objective for gathering and imaging light scattered from or fluoresced by particles passing through the viewing zone;
3. a fluidic subsystem for supplying a liquid sheath flow to the viewing zone;
4. a peristaltic pump for injecting a liquid sample flow carrying particles that pass together with the liquid sheath flow through the viewing zone;
5. a multimode optical fiber that receives scattered and fluoresced light from the viewing zone that the composite microscope objective gathers images; and
6. a wavelength division multiplexer for optically separating light received via the optical fiber into color bands.

According to an exemplary embodiment, the LD based optical subsystem for illuminating particles passing through the flow cytometer's viewing zone may generally include:

1. a laser diode oriented with its slow axis parallel to the direction of flow;
2. a collimating lens that converts the diverging beam from the LD into a collimated beam of elliptical shape with its major axis perpendicular to the flow;

3. a focusing lens system that reduces the laser beam at the viewing zone to an optimal width in the direction perpendicular to the flow; and
4. finally a high power cylindrical focusing element placed in the proximity of the viewing zone with its axis perpendicular to the direction of flow.

The high power cylindrical focusing element may transpose the far field profile of the LD along its slow axis to its Fourier conjugate at the viewing zone along the direction of flow, while maintains the transverse beam profile, such that the laser beam profile at the viewing zone is optimal for flow cytometric applications.

According to an exemplary embodiment, the composite microscope objective may generally include:

1. a concave spherical mirror;
2. a transparent aberration compensation plate with the flow cytometer's a viewing zone being located between the mirror and the plate. Scatter and fluorescence light emitted from particles in the viewing zone is collected by the mirror and reflected back toward the compensation plate. Optical aberrations originating from the mirror are significantly reduced after light passes through the compensation plate. In one embodiment of the present disclosure, the viewing zone may be located inside a flow cell provided by rectangular glass cuvette with a small rectangular channel through which a particle carrying liquid flows. The concave mirror may be made of an optically transparent material, such as glass or optical quality plastics, of plano-convex shape with a highly-reflective coating on the convex side for internal reflection. The plano-side of the mirror may be either gel-coupled or bonded to one side surface of the cuvette. The plano-aspheric compensation plate may be made of a transparent material, such as glass or optical quality plastics, with the plano side gel-coupled or bonded to the opposite side of the cuvette. The plano-convex shaped mirror and the aspheric compensation plate may also be formed integrally with the cuvettte. In yet another embodiment of the present disclosure, the viewing zone may be in a jet stream with both the concave mirror and the compensation plate being free standing from the viewing zone, and the mirror may be a front surface concave mirror.

According to an exemplary embodiment, the fluidic system may generally include a sheath liquid reservoir from which a liquid pump draws sheath liquid. Sheath liquid then flows from the liquid pump to an inlet of a T-coupling. One outlet arm of the T-coupling connects to a bypass that returns a fraction of the pumped sheath liquid back to the sheath liquid reservoir with the returned sheath liquid flowing into air within the sheath liquid reservoir. A second outlet arm of the T-coupling connects to a sheath route that includes a reservoir capsule followed by a particle filter and then the flow cell. The sheath liquid exiting the flow cell then goes to the waste tank. The fluidic resistance along the bypass is designed to be lower than the fluidic resistance along the sheath route. Consequently, only a small fraction of the sheath liquid goes through the flow cell. Note that typical sheath flow rate in flow cytometric applications is a few tens of milliliter per minute. The bypass therefore permits using higher flow rate liquid pumps that not only are much less expensive and more reliable, but also operates at higher pulsation frequency which is much easier to attenuate. Since the exit of the bypass route connects to air, it also serves as a large fluidic capacitor for significantly reducing pulsation in sheath liquid flowing along the sheath route. During operation, the inlet portion of the filter cartridge is filled with air. Therefore, the filter cartridge also serves as a fluidic capacitor, for further reducing pulsation in the sheath liquid at the flow cell to negligible level. Due to the large fluidic resistance at the flow cell, the air trapped near the inlet of the filter cartridge becomes compressed. If the liquid pump is turned off, the compressed air in filter cartridge being pushed back towards the sheath liquid reservoir becomes stored in the reservoir capsule whose size is chosen to prevent the trapped air from reaching the T-coupling.

According to an exemplary embodiment, the peristaltic pump may generally include a plurality of rollers located at the periphery of a rotor that moves the rollers circularly inside a housing's arcuate curved track and a compressible tube that the rollers compress against the track. In one embodiment of the present disclosure, the track of the peristaltic pump's housing may have one recess so the compressible tube is progressively decompressed to full expansion then compressed to full closure every time one of the rollers moves past the recess. The location and shape of the recess maintains the total volume of liquid within the compressible tube from the recess to the pump's outlet substantially invariant. The effect of tube expansion as a roller moves past the pump's outlet is compensated by the tube compression when a different other roller immediately upstream of the pump outlet moves into the recess' compressing section. In another embodiment of the present disclosure, the track of the pump housing may contain a plurality of recesses, providing for a plurality of roller upstream of the pump outlet to progressively modify the tube compression in multiple sections along the compressible tube. The locations and shapes of the plurality of recesses are designed such that the modification of tube compression at these sections substantially compensates the effect due to the tube expansion near the pump outlet. In yet another embodiment of the present disclosure, the compressible tube is kept fully closed underneath the roller except in the inlet and exit sections. A variable speed motor may be used to drive the pump. When a roller reaches the exit section, the motor's rotation may programmatically speed up to compensate for the tube's expansion.

According to an exemplary embodiment, a wavelength division multiplexer ("WDM") may include at least two optical elements. The first optical element collimates a beam of light received from an extended light source, such as the light from a pinhole or from a multimode optical fiber. The first optical element magnifies the extended light source, for example, as defined by the pinhole, or the core of the multimode optical fiber, to an image having a size similar to the effective cross section of the first optical element thereby creating a collimated light beam between the first optical element and its image. A second optical element is positioned near the image, and relays the first optical element with unit magnification down the optical path. In this way, the second optical element effectively doubles the collimated path length. Additional optical elements in the same 1:1 image relay configuration may also be included to further extend the collimated optical path. The cascaded unit-magnification image relay architecture of the present disclosure extends the collimated optical path length without large beam expansion. As a result, WDM techniques well-established in the optical communication industry can be readily adapted for fluorescence light detection. In particular, multiple colored bands present in the beam of light can be separated using dichroic filters located along the optical path with the separated light being tightly focused into small spots compatible with low noise semiconductor photodetectors.

In one embodiment of a WDM, the first optical element is a lens and the second element is a concave mirror, although it is apparent to those skilled in the art that other types of refractive and/or reflective optical components may also be used to achieve the same design goal. The optical path in the WDM of the present disclosure may be folded using dichroic filters. In one embodiment of the present disclosure, the light path may be folded into a zig-zag configuration. To facilitate the flow cytometer's reliable reconfiguration, each dichroic filter may be bonded to a mechanical holder having a reference surface that is optically parallel to the filter's reflective surface. As a result, all of the WDM's filters can be accurately positioned along the optical path by referencing the filter's holder against a common optical flat. In another embodiment of the present disclosure, the collimated beam passing through the dichroic filter is further branched out into multiple colored bands using secondary dichroic filters. It is apparent to those skilled in the art that dichroic filters may be inserted anywhere along the long, narrow and collimated beam path afforded by the present disclosure's relay imaging to thereby permit delivering a tightly focused beam to photo detectors using a variety of optical configurations, such as the star configuration discussed in U.S. Pat. No. 6,683,314, the branched configuration discussed in U.S. Pat. No. 4,727,020 and other types of WDM optical configuration widely practiced in the optical communication industry. Instead of concave mirrors, the WDM may be replaced by curved dichroic filters to further increase the number of colored bands selected by the WDM.

According to some exemplary embodiments, an optical system for impinging beams of light into a viewing zone in which a sample flow carrying objects and a sheath flow pass through includes a first light source for emitting a first beam of light along a first beam path to illuminate objects in the viewing zone at a first location, a second light source for emitting a second beam of light along a second beam path to illuminate objects in the viewing zone at a second location, a beam compressing optical element for reducing widths of the first and second beams of light on their major axes to a width less than the width of the sheath flow, and a first chromatic compensation element located on at least one of the first beam path and the second beam path for compensating chromatic aberration in the viewing zone such that the first location and the second locations are on a common plane parallel to the direction of the sample flow. The wavelength of the second light source is different from the wavelength of the first light source. The chromatic compensation allows compensating the properties of the different paths, resulting e.g. from the different wavelengths, the different path lengths, different locations in the flow path etc. This applies also for multiple compensating elements in different paths, in particular when using two, three or more wavelengths for illumination.

According to some exemplary embodiments, an optical system includes a first light source for emitting a first beam of light to illuminate objects at a first location in a viewing zone, a composite microscope objective for imaging light scattered from and fluoresced by the objects at the first location in the viewing zone at an image plane external to the composite microscope, and a beam splitter for reflecting or transmitting scattered and fluoresced light, wherein the light source and the image plane are on two sides of the beam splitter. The composite microscope includes a concave mirror and an aberration corrector plate. The aberration corrector plate is an aspheric lens that has a first zone with negative optical power and a second zone with positive optical power radially inside the first zone. The viewing zone is positioned between the concave mirror and the aberration corrector plate. This allows a compact build-up, as the illumination and the detection of light scattered from and fluoresced by the objects in the viewing zone may be conducted from the same side of the microscope objective.

According to some exemplary embodiments, an axial light detection system includes a concave mirror for reflecting light that propagates from a viewing zone, and a detector for measuring axial light loss produced by an object in the viewing zone by detecting light reflected by the concave mirror. This allows an effective detection of light loss which may serve as a base for better interpretation of the measured values.

According to some exemplary embodiments, a power monitoring system for adjusting power of a light source includes a first light source for emitting a first beam of light, a second light source for emitting a second beam of light, a first dichroic filter for reflecting the first beam of light and passing the second beam of light, a second dichroic filter for reflecting the second beam of light, a first detector for measuring residual power of the first and second beams of light downstream of the first dichroic filter on a time-division multiplexing basis, and a control unit coupled with the first detector and the first and second light sources, wherein the control unit adjusts power of one or more of the first and second light sources based on measured residual power of the first and second beams of light by the first detector. This allows an effective detection of light power which may serve as a base for better interpretation of the measured values, as well as an effective control procedure, in particular when controlling or adaption respective light sources.

According to another exemplary embodiment, an optical system includes an objective adapted for imaging light scattered from and fluoresced by an illuminated object within a viewing zone, an optical transmission member for propagating light received from the aspheric lens, a wavelength division multiplexer (WDM) for receiving light propagated by the optical transmission member. The objective includes an aspheric lens with a first zone with negative optical power and a second zone inside the first zone with positive optical power, and a concave mirror for reflecting light scattered from and fluoresced by the illuminated object through the aspheric lens, wherein the viewing zone is located between said concave mirror and the aspheric lens. The WDM includes a first optical element that produces a beam of light with an image of substantially the same size as the effective size of said first optical element, at least one dichroic filter located between said first optical element and said image, a second optical element located in one of said branches, and an image relay optical element located near the image produced by said first optical element in the other branch. The dichroic filter separates the beam of light into two branches of distinctive colors. The beam of light in said branch is focused to a spot by said second optical element. The image relay optical element produces an image of said first optical element at substantially unit magnification. This allows an adapted combined operation of the microscope objective and the WDM, as well as the optical coupling there between. In particular the microscope objective and the WDM as well as the optical coupling may be adapted to match to each other with respect to wavelength and other parameters.

According to another exemplary embodiment, an optical system includes a light source for emitting a beam of light to illuminate an object in a viewing zone, a concave mirror for receiving and reflecting light scattered from and fluo-

resced by the illuminated object, an aspheric lens with a first zone with negative optical power and a second zone inside the first zone with positive optical power, wherein light reflected by the concave mirror passes through the aspheric lens, and wherein the viewing zone is located between said concave mirror and the aspheric lens, an optical transmission member for receiving and propagating light from the aspheric lens, and a multiplexer for receiving light from the optical transmission member and separating the light into at least two colors. This allows an adapted combined operation of the illumination system, the microscope objective and the WDM, as well as the optical coupling there between. In particular the illumination system, the microscope objective and the WDM as well as the optical coupling may be adapted to match to each other with respect to wavelength and other parameters.

According to another exemplary embodiment, an apparatus for imaging light scattered from and fluoresced by an illuminated object within a viewing zone includes a fluid delivery system for delivering an object to a viewing zone, a light source for illuminating the object in the viewing zone, a concave mirror located on one side of the viewing zone for reflecting light scattered from and fluoresced by the illuminated object, and an aspheric lens located on another side of the viewing zone for receiving the light reflected by the concave mirror and forming an image at an image plane, the aspheric lens having a first zone with negative optical power and a second zone radially inside the first zone with positive optical power. This allows an adapted combined operation of the fluid delivery system, the illumination system, and the microscope objective. In particular the fluid delivery system, the illumination system, and the microscope objective may be adapted to match to each other with respect to wavelength and other parameters.

According to other exemplary embodiments, an optical method for impinging beams of light into a viewing zone includes directing a first beam of light to illuminate objects in a viewing zone to produce scattered and fluoresced light, reflecting the scattered and fluoresced light using a concave mirror toward an aberration corrector plate, correcting aberrations in the reflected light with the aberration corrector plate, wherein the aberration corrector plate has a first zone with negative optical power a second zone radially inside the first zone with positive optical power, and reflecting or transmitting the corrected light using a beam splitter.

According to other exemplary embodiments, an optical method for detecting light includes reflecting light that propagates from a viewing zone using a concave mirror, and measuring axial light loss produced by an object in the viewing zone by detecting light reflected by the concave mirror.

According to other exemplary embodiments, a method of gathering and imaging light scattered from or fluoresced by objects in a viewing includes delivering an object to a viewing zone, illuminating the object in the viewing zone to produce scattered and fluoresced light, reflecting the scattered and fluoresced light using a concave mirror toward a transparent aberration corrector plate, and correcting spherical aberrations in the reflected light with the transparent aberration corrector plate, wherein the transparent aberration corrector plate has a first zone with negative optical power and a second zone radially inside the first zone with positive optical power.

According to other exemplary embodiments, a composite microscope objective adapted for imaging light scattered from and fluoresced by an object present within a viewing zone, comprises a viewing zone, a concave mirror arrangement, an exit area and an illumination beam forming arrangement, wherein the viewing zone is arranged between the concave mirror arrangement and the exit area, and wherein the concave mirror is arranged to reflect scattered and fluoresced light impinging from an object present in the viewing zone to the exit area, and wherein the illumination beam forming arrangement is arranged so that an illumination beam entering the illumination beam forming arrangement is pre-definitely formed at the viewing zone. According to other exemplary embodiments there may be provided an aberration corrector plate, in particular an aspheric lens in the exit area. This allows an effective build-up of the microscope objective. It should be noted that the aberration corrector plate is not necessary when providing a concave mirror shape allowing a sufficient imaging of the light scattered and fluoresced from an object in the viewing zone. If required an aberration corrector plate, in particular an aspheric lens may be arranged in the exit area.

According to other exemplary embodiments a wavelength division multiplexer (WDM) for separating light emitted from a light source into multiple colored bands comprises an imaging optical arrangement, a dichroic filter arrangement, a semiconductor photo detector, and a focusing optical arrangement, wherein the imaging optical arrangement forms a beam of light from the light emitted from a light source and produces an image of substantially the same size as the effective size of said imaging optical arrangement, and wherein the dichroic filter arrangement is located between said imaging optical arrangement and said image, and separates the beam of light into a first branch and a second branch of distinctive colors, and wherein the semiconductor photo detector is located in the first branch, and wherein the focusing optical arrangement is located between the dichroic filter arrangement and the semiconductor photo detector so as to focus the beam of light onto the semiconductor photo detector. Thus, an effective detection arrangement may be provided, which may be operated with a semiconductor detector. The semiconductor detector may be a semiconductor photo detector. The semiconductor detector may be an avalanche photo diode or a carbon nanotube detector. Thus, a reduced signal to noise ratio can be achieved.

In first aspect of the disclosure, a flow cytometer includes a laser diode (LD) based optical subsystem for directing a beam of light into a viewing zone of said flow cytometer through which a sample liquid carrying particles flows, the sample liquid being hydrodynamically focused within the viewing zone by a liquid sheath flow that also flows through the viewing zone, a composite microscope objective for imaging light scattered from and fluoresced by a particle present within the viewing zone, a fluidic subsystem for supplying the liquid sheath flow to the viewing zone, the liquid sheath flow lacking pulsations, a peristaltic pump for supplying the sample liquid carrying the particles, the sample liquid being hydrodynamically focused within the viewing zone by the liquid sheath flow, a peristaltic pump for supplying the sample liquid carrying the particles, the sample liquid being hydrodynamically focused within the viewing zone by the liquid sheath flow, and a wavelength division multiplexer (WDM) for separating into multiple colored bands a beam of light emitted initially from the viewing zone and imaged by the composite microscope objective into an optical fiber for transmission to the WDM. The LD based optical subsystem may include a LD for emitting a diverging beam of light from an edge thereof, the diverging beam of light having an elliptically shaped cross-sectional profile with both a major axis and a minor axis, a collimating lens for converting the diverging beam of light

emitted from said LD into a collimated elliptical beam of light, wherein the minor axis of said collimated elliptical beam of light is oriented parallel to a direction in which particles pass through the viewing zone, a beam compressing optical element for reducing the size of said elliptical beam of light at the viewing zone whereby a width of said major axis of said elliptical beam of light oriented perpendicular to the direction in which particles pass through the viewing zone is less than a width of said liquid sheath flow, a cylindrical focusing element positioned adjacent to the viewing zone with an axis of said cylindrical focusing element being oriented perpendicular to the direction in which particles pass through the viewing zone whereby said minor axis of said beam of light becomes focused at the viewing zone, and the size of said major axis of said elliptical beam of light at the viewing zone remains essentially unchanged. The composite microscope objective may include a concave mirror upon which scattered and fluoresced light impinges and an aberration corrector plate made of optically transparent material. The aberration corrector plate is an aspheric lens that has a first zone of said aberration corrector plate having negative optical power outside a neutral zone and a second zone of said aberration corrector plate inside the neutral zone having positive optical power light. The neutral zone is the thinnest portion of the aberration corrector plate. Light reflected from the concave mirror passes through said aberration corrector plate. The viewing zone of said flow cytometer is located between said concave mirror and said aberration corrector plate. The fluidic subsystem may include a liquid pump for supplying liquid drawn from a reservoir and a T-coupling having at least one (1) inlet and two (2) outlets. The inlet of said T-coupling receives liquid from said liquid pump. A first fraction of the liquid received by the inlet flows via a first one of the outlets and via a bypass conduit back to the reservoir. A second fraction of the liquid received by the inlet flows via a second one of the outlets and via a particle filter to the viewing zone of said flow cytometer. The peristaltic pump may include a pump housing having a arcuate curved track formed therein that extends between a pump inlet and a pump outlet, a plurality of rollers that are attached to a rotor, the rollers having a substantially equal angular spacing between each pair of immediately adjacent rollers, the rotor being rotatable together with the rollers attached thereto inside said pump housing, and a compressible tube sandwiched between said rollers and the arcuate curved track of said pump housing. The arcuate curved track includes an exit section and at least one pumping section along the arcuate curved track between the pump inlet and the pump outlet. As a roller rolls through the exit section, said compressible tube adjacent to said roller progressively expands from fully closed at a beginning of said exit section to fully open at the pump outlet where said roller breaks contact with said compressible tube. Said compressible tube is compressed to fully closed by at least one of said rollers. The wavelength division multiplexer (WDM) may include a collimating optical element that magnifies an to produce an image of substantially the same size as the effective size of said collimating optical element, at least one dichroic filter located between said collimating optical element and said image, said dichroic filter separating the collimated beam of light into two (2) branches of distinctive colors, a focusing optical element located in one of said branches, the beam of light in said branch being focused to a spot having a diameter of less than 1.0 mm by said focusing optical element, and an image relay optical element located near the image produced by said collimating optical element in the other branch, said image relay optical element producing an image of said collimating optical element at substantially unit magnification.

In second aspect of the disclosure, said cuvette may have a rectangularly-shaped cross-section, and the viewing zone of the flow cytometer is located within a channel having a rectangularly-shaped cross-section that is located within said cuvette.

In third aspect of the disclosure, said cuvette may have a tubularly-shaped cross-section, and the viewing zone of the flow cytometer is located within a channel having a circularly-shaped cross-section that is located within said cuvette.

In fourth aspect of the disclosure, the sample liquid and the liquid sheath flow form a jet stream in which the viewing zone of the flow cytometer is located.

In fifth aspect of the disclosure, said cylindrical focusing element is in optical contact with an entrance face of said rectangularly-shaped cuvette.

In sixth aspect of the disclosure, said cylindrical focusing element is separated from said rectangularly-shaped cuvette.

In seventh aspect of the disclosure, said cylindrical focusing element is separated from said tubularly-shaped cuvette.

In eighth aspect of the present disclosure, said cylindrical focusing element is separated from said jet stream.

In ninth aspect of the present disclosure, the flow cytometer further comprises a polarization conditioning element through which said collimated elliptical beam of light passes.

In tenth aspect of the present disclosure, an optical image of the viewing zone is formed outside the composite microscope objective.

In eleventh aspect of the present disclosure, the viewing zone is located within a flow channel included in a rectangularly-shaped cuvette made of optically transparent material.

In twelfth aspect of the present disclosure, said concave mirror is a plano-concave back surface mirror made from an optically transparent material.

In thirteenth aspect of the present disclosure, the plano-surface of said plano-concave back surface mirror is optically coupled to a flat surface of said cuvette.

In fourteenth aspect of the present disclosure, an optical adhesive material accomplishes the optical coupling.

In fifteenth aspect of the present disclosure, an index matching gel accomplishes the optical coupling.

In sixteenth aspect of the present disclosure, an index matching fluid accomplishes the optical coupling.

In seventeenth aspect of the present disclosure, optical contact bonding accomplishes the optical coupling.

In eighteenth aspect of the present disclosure, the plano-concave back surface mirror formed integrally with said cuvette means.

In nineteenth aspect of the present disclosure, said aberration corrector plate is a plano-aspherical lens.

In twentieth aspect of the present disclosure, a plano-surface of said aberration corrector plate is optically coupled to a flat surface of said cuvette opposite of said plano-concave back surface mirror.

In twenty-first aspect of the present disclosure, an index matching gel accomplishes the optical coupling.

In twenty-second aspect of the present disclosure, an index matching fluid accomplishes the optical coupling.

In twenty-third aspect of the present disclosure, optical contact bonding accomplishes the optical coupling.

In twenty-fourth aspect of the present disclosure, the plano-aspherical lens is formed integrally with said cuvette.

In twenty-fifth aspect of the present disclosure, said aberration corrector plate is detached from said cuvette.

In twenty-sixth aspect of the present disclosure, the viewing zone is inside a jet stream.

In twenty-seventh aspect of the present disclosure, said concave mirror is a front surface mirror.

In twenty-eighth aspect of the present disclosure, the viewing zone is located on a surface of a flat, transparent substrate.

In twenty-ninth aspect of the present disclosure, said concave mirror is a plano-concave back surface mirror made from an optically transparent material.

In thirtieth aspect of the present disclosure, the plano-surface of said plano-concave back surface mirror is optically coupled to said flat, transparent substrate.

In thirty-first aspect of the present disclosure, an optical adhesive material accomplishes the optical coupling.

In thirty-second aspect of the present disclosure, an index matching gel accomplishes the optical coupling.

In thirty-third aspect of the present disclosure, an index matching fluid accomplishes the optical coupling.

In thirty-fourth aspect of the present disclosure, optical contact bonding accomplishes the optical coupling.

In thirty-fifth aspect of the present disclosure, said plano-concave back surface mirror is formed integrally with said flat, transparent substrate.

In thirty-sixth aspect of the present disclosure, said aberration corrector plate is detached from said flat, transparent substrate.

In thirty-seventh aspect of the present disclosure, the particle filter has inlet thereto for receiving liquid from the T-coupling, the inlet of the particle filter being disposed so that air becomes trapped within the particle filter at the inlet thereto.

In thirty-eighth aspect of the present disclosure when said liquid pump is turned off air cannot enter into the bypass conduit.

In thirty-ninth aspect of the present disclosure, the flow cytometer further comprises a small capsule disposed between the second one of the outlets of said T-coupling and the particle filter for storing air ejected from the particle filter when the liquid pump is turned off.

In fortieth aspect of the present disclosure, the flow cytometer further comprises a length of tubing disposed between the second one of the outlets of said T-coupling and the particle filter for storing air ejected from the particle filter when the liquid pump is turned off.

In forty-first aspect of the present disclosure, the flow cytometer further comprises an adjustable valve located in the bypass conduit between the first one of the outlets of the T-coupling and the reservoir for restricting liquid flow therebetween.

In forty-second aspect of the present disclosure, the flow cytometer further comprises an adjustable valve located between the second one of the outlets of the T-coupling and the viewing zone for restricting liquid flow therebetween.

In forty-third aspect of the present disclosure, the throughput of the liquid pump is adjustable.

In forty-fourth aspect of the present disclosure, the arcuate curved track of said pump housing includes at least two (2) pumping sections, the arcuate curved track further including at least one recess section located between said pumping sections along the arcuate curved track, and said compressible tube at said recess section becoming decompressed to full expansion then compressed to fully closed when one (1) of said rollers rolls through said recess section.

In forty-fifth aspect of the present disclosure, the peristaltic pump includes a plurality of recess sections along said arcuate curved track upstream of the pump outlet, the angular spacing between the compression part of said recess section adjacent to the pump outlet and said exit section of said arcuate curved track being substantially the same as the angular spacing between each pair of immediately adjacent rollers.

In forty-sixth aspect of the present disclosure, said compression part of said recess section adjacent to the pump outlet has a shape complementing a shape of said exit section of said arcuate curved track to maintain the total fluid volume inside a section of said compressible tube extending from said recess section to the pump outlet substantially invariant when one of said rollers progressively rolls off said exit section of the arcuate curved track.

In forty-seventh aspect of the present disclosure, the peristaltic pump includes a plurality of recess sections respectively interspersed between immediately adjacent pairs of a plurality of pumping sections.

In forty-eighth aspect of the present disclosure, both angular spacing between adjacent pairs of recess sections, and angular spacing between said exit section of said arcuate curved track and an adjacent recess section to said exit section are substantially the same as the angular spacing between each pair of immediately adjacent rollers.

In forty-ninth aspect of the present disclosure, shapes of a plurality of recess sections of said arcuate curved track complement a shape of said exit section of said arcuate curved track to maintain a fluid volume in sections of said compressible tube at the plurality of recess sections and said exit section substantially invariant when one of said rollers progressively rolls off said exit section of the arcuate curved track.

In fiftieth aspect of the present disclosure, a speed of said rotor is programmably controlled to vary substantially in inverse proportion to the fluid volume change rate in said compressible tube due to its changing compression near the exit section of said arcuate curved track.

In fifty-first aspect of the present disclosure, at least one additional dichroic filter is located between said image relay optical element and the image produced by said image relay optical element, said dichroic filter producing two (2) branches of the beam of light having distinctive colors.

In fifty-second aspect of the present disclosure, another focusing optical element is located in one of said branches and focuses the beam of light in the branch into a spot having a diameter of less than 1.0 mm.

In fifty-third aspect of the present disclosure, wherein successive combinations of said image relay optical element, dichroic filter, and focusing optical element are cascaded to produce additional focused spots having a diameter of less than 1.0 mm for multiple colored bands of said beam of light.

In fifty-fourth aspect of the present disclosure, the dichroic filter is assembled using a template that include two (2) optically flat glass plates bonded together in optical contact, and the dichroic filter is bonded to a filter holder using the template such that a coated filter surface of the dichroic filter is indented and optically parallel to a reference surface of the filter holder.

In fifty-fifth aspect of the present disclosure, the reference surface of the filter holder rests against an optically flat surface of an reference block included in the WDM thereby providing consistent optical alignment when installing the dichroic filter into the WDM.

In fifty-sixth aspect of the present disclosure, the LD based optical subsystem includes a LD for emitting a diverging beam of light from an edge thereof, the diverging beam of light having an elliptically shaped cross-sectional profile with both a major axis and a minor axis, a collimating lens for converting the diverging beam of light emitted from said LD into a collimated elliptical beam of light, wherein the minor axis of said collimated elliptical beam of light is oriented parallel to a direction in which particles pass through the viewing zone, a beam compressing optical element for reducing the size of said elliptical beam of light at the viewing zone whereby a width of said major axis of said elliptical beam of light oriented perpendicular to the direction in which particles pass through the viewing zone is less than a width of said liquid sheath flow, a cylindrical focusing element positioned adjacent to the viewing zone with an axis of said cylindrical focusing element being oriented perpendicular to the direction in which particles pass through the viewing zone whereby said minor axis of said beam of light becomes focused at the viewing zone, and the size of said major axis of said elliptical beam of light at the viewing zone remains essentially unchanged.

In fifty-seventh aspect of the present disclosure, the optical subsystem may further comprise a cuvette having a rectangularly-shaped cross-section, and the viewing zone may be located within a channel having a rectangularly-shaped cross-section that is located within said cuvette.

In fifty-eighth aspect of the present disclosure, the optical subsystem further comprises a cuvette having a tubularly-shaped cross-section, and the viewing zone is located within a channel having a circularly-shaped cross-section that is located within said cuvette.

In fifty-ninth aspect of the present disclosure, the sample liquid and the liquid sheath flow form a jet stream in which the viewing zone is located.

In sixtieth aspect of the present disclosure, cylindrical focusing element is in optical contact with an entrance face of said rectangularly-shaped cuvette.

In sixty-first aspect of the present disclosure, said cylindrical focusing element is separated from said rectangularly-shaped cuvette.

In sixty-second aspect of the present disclosure, said cylindrical focusing element is separated from said tubularly-shaped cuvette.

In sixty-third aspect of the present disclosure, said cylindrical focusing element is separated from said jet stream.

In sixty-fourth aspect of the present disclosure, the optical subsystem (**50**) further comprises a polarization conditioning element through which said collimated elliptical beam of light passes.

In sixty-fifth aspect of the present disclosure, a method for delivering an elliptically shaped beam of light using a LD based optical subsystem (**50**), the beam of light having a smooth profile at a focus of a minor axis thereof that is located at a viewing zone through which a sample liquid flows, the sample liquid being hydrodynamically focused within the viewing zone by a liquid sheath flow that also flows through the viewing zone, the method includes the steps of: providing a LD that emits a diverging beam of light from an edge thereof, the diverging beam of light having an elliptically shaped cross-sectional profile with both a major axis and a minor axis, impinging the diverging beam of light emitted by the LD upon a collimating lens for converting the diverging beam of light emitted therefrom into a collimated elliptical beam of light wherein the minor axis of said collimated elliptical beam of light is oriented parallel to a direction in which sample liquid passes through the viewing zone, after passing through said collimating lens, impinging the collimated elliptical beam of light upon an beam compressing optical element for reducing the size of said elliptical beam of light at the viewing zone whereby a width of said major axis of said elliptical beam of light oriented perpendicular to the direction in which sample liquid passes through the viewing zone becomes less than a width of said liquid sheath flow, and after passing through said beam compressing optical element, impinging the beam of light upon a cylindrical focusing element positioned adjacent to the viewing zone with an axis of said cylindrical focusing element being oriented perpendicular to the direction in which sample liquid passes through the viewing zone whereby said minor axis of said beam of light becomes focused at the viewing zone, and the size of said major axis of said elliptical beam of light at the viewing zone remains essentially unchanged.

In sixty-sixth aspect of the present disclosure, the viewing zone is located within a channel having a rectangularly-shaped cross-section that is located within a cuvette.

In sixty-seventh aspect of the present disclosure, the viewing zone is located within a channel having a circularly-shaped cross-section that is located within a cuvette.

In sixty-eighth aspect of the present disclosure, the viewing zone is located within a jet stream.

In sixty-ninth aspect of the present disclosure, the method further comprises a step of establishing an optical contact between said cylindrical focusing element and an entrance face of said cuvette.

In seventieth aspect of the present disclosure, the method further comprises a step of establishing a spacing between said cylindrical focusing element and said cuvette.

In seventy-first aspect of the present disclosure, the method further comprises a step of establishing a spacing between said cylindrical focusing element and said cuvette.

In seventy-second aspect of the present disclosure, the method further comprise a step of establishing a spacing between said cylindrical focusing element and said jet stream.

In seventy-third aspect of the present disclosure, the method further comprises a step of inserting a polarization conditioning element between the collimating lens and the beam compressing optical element whereby the collimated elliptical beam of light passes through the polarization conditioning element.

In seventy-fourth aspect of the present disclosure, The composite microscope objective includes a concave mirror upon which scattered and fluoresced light impinges and an aberration corrector plate made of optically transparent material. The aberration corrector plate is an aspheric lens that has a first zone of said aberration corrector plate having negative optical power outside a neutral zone and a second zone of said aberration corrector plate inside the neutral zone having positive optical power light. The neutral zone is the thinnest portion of the aberration corrector plate. Light reflected from the concave mirror passes through said aberration corrector plate. The viewing zone of said flow cytometer is located between said concave mirror and said aberration corrector plate.

In seventy-fifth aspect of the present disclosure, an optical image of the viewing zone is formed outside the composite microscope objective.

In seventy-sixth aspect of the present disclosure, the viewing zone is located within a flow channel included in a rectangularly-shaped cuvette made of optically transparent material.

In seventy-seventh aspect of the present disclosure, said concave mirror is a plano-concave back surface mirror made from an optically transparent material.

In seventy-eighth aspect of the present disclosure, a plano-surface of said plano-concave back surface mirror is optically coupled to a flat surface of said cuvette.

In seventy-ninth aspect of the present disclosure, an optical adhesive material accomplishes the optical coupling.

In eightieth aspect of the present disclosure an index matching gel accomplishes the optical coupling.

In eighty-first aspect of the present disclosure, an index matching fluid accomplishes the optical coupling.

In eighty-second aspect of the present disclosure, optical contact bonding accomplishes the optical coupling.

In eighty-third aspect of the present disclosure, the plano-concave back surface mirror formed integrally with said cuvette means.

In eighty-fourth aspect of the present disclosure, said aberration corrector plate is a plano-aspherical lens.

In eighty-fifth aspect of the present disclosure, a plano-surface of said aberration corrector plate is optically coupled to a flat surface of said cuvette opposite of said plano-concave back surface mirror.

In eighty-sixth aspect of the present disclosure, an index matching gel accomplishes the optical coupling.

In eighty-seventh aspect of the present disclosure, an index matching fluid accomplishes the optical coupling.

In eighty-eighth aspect of the present disclosure, optical contact bonding accomplishes the optical coupling.

In eighty-ninth aspect of the present disclosure, the plano-aspherical lens is formed integrally with said cuvette.

In ninetieth aspect of the present disclosure said aberration corrector plate is detached from said cuvette.

In ninety-first aspect of the present disclosure, the viewing zone is inside a jet stream.

In ninety-second aspect of the present disclosure, said concave mirror is a front surface mirror.

In ninety-third aspect of the present disclosure, the viewing zone is located on a surface of a flat, transparent substrate.

In ninety-fourth aspect of the present disclosure, said concave mirror is a plano-concave back surface mirror made from an optically transparent material.

In ninety-fifth aspect of the present disclosure, a plano-surface of said plano-concave back surface mirror is optically coupled to said flat, transparent substrate.

In ninety-sixth aspect of the present disclosure, an optical adhesive material accomplishes the optical coupling.

In ninety-seventh aspect of the present disclosure, an index matching gel accomplishes the optical coupling.

In ninety-eighth aspect of the present disclosure, an index matching fluid accomplishes the optical coupling.

In ninety-ninth aspect of the present disclosure, optical contact bonding accomplishes the optical coupling.

In one hundredth aspect of the present disclosure, said plano-concave back surface mirror is formed integrally with said flat, transparent substrate.

In one hundred first aspect of the present disclosure, said aberration corrector plate is detached from said flat, transparent substrate.

In one hundred second aspect of the present disclosure, a method for characterizing microscopic species using a microscope objective device includes a concave mirror, an aberration corrector plate made of optically transparent material, and a viewing zone located in between said concave mirror and said aberration corrector plate. The aberration corrector plate is an aspheric lens that has a first zone of said aberration corrector plate having negative optical power outside a neutral zone and a second zone of said aberration corrector plate inside the neutral zone having positive optical power light. The neutral zone is the thinnest portion of the aberration corrector plate.

In one hundred third aspect of the present disclosure, an optical image of the viewing zone is formed outside the device.

In one hundred fourth aspect of the present disclosure, the viewing zone is located within a flow channel contained in a rectangularly-shaped cuvette means made of optically transparent material.

In one hundred fifth aspect of the present disclosure, said concave mirror is a plano-concave back surface mirror made from an optically transparent material.

In one hundred sixth aspect of the present disclosure, a plano-surface of said plano-concave back surface mirror means is optically coupled to a flat surface of said cuvette means.

In one hundred seventh aspect of the present disclosure, an optical adhesive material accomplishes the optical coupling.

In one hundred eighth aspect of the present disclosure, an index matching gel accomplishes the optical coupling.

In one hundred ninth aspect of the present disclosure, an index matching fluid accomplishes the optical coupling.

In one hundred tenth aspect of the present disclosure, optical contact bonding accomplishes the optical coupling.

In one hundred eleventh aspect of the present disclosure the plano-concave back surface mirror is formed integrally with said cuvette.

In one hundred twelfth aspect of the present disclosure, said aberration corrector plate is a plano-aspherical lens.

In one hundred thirteenth aspect of the present disclosure, a plano-surface of said aberration corrector plate is optically coupled to a flat surface of said cuvette means opposite of said concave mirror.

In one hundred fourteenth aspect of the present disclosure an index matching gel accomplishes the optical coupling.

In one hundred fifteenth aspect of the present disclosure, an index matching fluid accomplishes the optical coupling.

In one hundred sixteenth aspect of the present disclosure, optical contact bonding accomplishes the optical coupling.

In one hundred seventeenth aspect of the present disclosure, the plano-aspherical lens is formed integrally with said cuvette.

In one hundred eighteenth aspect of the present disclosure, said aberration corrector plate is detached from said cuvette.

In one hundred nineteenth aspect of the present disclosure, the viewing zone is inside a jet stream.

In one hundred twentieth aspect of the present disclosure, said concave mirror is a front surface mirror.

In one hundred twenty-first aspect of the present disclosure, the viewing zone is located on a surface of a flat, transparent substrate.

In one hundred twenty-second aspect of the present disclosure said concave mirror is a plano-concave back surface mirror made from an optically transparent material.

In one hundred twenty-third aspect of the present disclosure, a plano-surface of said plano-concave back surface mirror means is optically coupled to said flat, transparent substrate.

In one hundred twenty-fourth aspect of the present disclosure, an optical adhesive material accomplishes the optical coupling.

In one hundred twenty-fifth aspect of the present disclosure, an index matching gel accomplishes the optical coupling.

In one hundred twenty-sixth aspect of the present disclosure, an index matching fluid accomplishes the optical coupling.

In one hundred twenty-seventh aspect of the present disclosure, optical contact bonding accomplishes the optical coupling.

In one hundred twenty-eighth aspect of the present disclosure, said plano-concave back surface mirror is formed integrally with said flat, transparent substrate.

In one hundred twenty-ninth aspect of the present disclosure, said aberration corrector plate is detached from said flat, transparent substrate.

In one hundred thirtieth aspect of the present disclosure, a fluidic subsystem for supplying a liquid flow pulsation free to an outlet of the fluidic subsystem includes a liquid pump for supplying liquid drawn from a reservoir and a T-coupling having at least one inlet and two outlets. The inlet of said T-coupling receives liquid from said liquid pump. A first fraction of the liquid received by the inlet flows via a first one of the outlets and via a bypass conduit back to the reservoir. A second fraction of the liquid received by the inlet flows via a second one of the outlets and via a particle filter to the viewing zone of said flow cytometer.

In one hundred thirty-first aspect of the present disclosure, the particle filter has an inlet thereto for receiving liquid from the T-coupling, the inlet of the particle filter being disposed so that air becomes trapped within the particle filter at the inlet thereto.

In one hundred thirty-second aspect of the present disclosure, when said liquid pump is turned off air cannot enter into the bypass conduit.

In one hundred thirty-third aspect of the present disclosure, the fluidic subsystem further comprises a small capsule disposed between the second one of the outlets of said T-coupling and the particle filter for storing air ejected from the particle filter when the liquid pump is turned off.

In one hundred thirty-fourth aspect of the present disclosure, the fluidic subsystem further comprises a length of tubing disposed between the second one of the outlets of said T-coupling and the particle filter for storing air ejected from the particle filter when the liquid pump is turned off.

In one hundred thirty-fifth aspect of the present disclosure, the fluidic subsystem further comprises an adjustable valve located in the bypass conduit between the first one of the outlets of the T-coupling and the reservoir for restricting liquid flow therebetween.

In one hundred thirty-sixth aspect of the present disclosure, the fluidic subsystem further comprises an adjustable valve located between the second one of the outlets of the T-coupling and the outlet of the fluidic subsystem for restricting liquid flow therebetween.

In one hundred thirty-seventh aspect of the present disclosure, the throughput of the liquid pump is adjustable.

In one hundred thirty-eighth aspect of the present disclosure, a method for supplying a liquid flow pulsation free to an outlet of the fluidic subsystem includes a liquid pump for supplying liquid drawn from a reservoir and a T-coupling having at least one (1) inlet and two (2) outlets. The inlet of said T-coupling receives liquid from said liquid pump. A first fraction of the liquid received by the inlet flows via a first one of the outlets and via a bypass conduit back to the reservoir. A second fraction of the liquid received by the inlet flows via a second one of the outlets and via a particle filter to the viewing zone of said flow cytometer.

In one hundred thirty-ninth aspect of the present disclosure, during normal operation certain amount of air is trapped near the inlet portion of said filter cartridge means.

In one hundred fortieth aspect of the present disclosure said reservoir means holds sufficient amount of liquid such that when said pump means is turned off, portion of the tubing between said T-coupling means and said reservoir means is still filled with liquid, preventing said trapped air from leaking into said bypass means.

In one hundred forty-first aspect of the present disclosure, said reservoir means is a capsule.

In one hundred forty-second aspect of the present disclosure, said reservoir means is a piece of tubing.

In one hundred forty-third aspect of the present disclosure an adjustable flow restrictor means is placed in the bypass route.

In one hundred forty-fourth aspect of the present disclosure an adjustable flow restrictor means is placed in the sheath route.

In one hundred forty-fifth aspect of the present disclosure, the throughput of the sheath pump is adjustable.

In one hundred forty-sixth aspect of the present disclosure, a peristaltic pump includes a pump housing having an arcuate curved track formed therein that extends between a pump inlet and a pump outlet, a plurality of rollers that are attached to a rotor, the rollers having a substantially equal angular spacing between each pair of immediately adjacent rollers, the rotor being rotatable together with the rollers attached thereto inside said pump housing, and a compressible tube sandwiched between said rollers and the arcuate curved track of said pump housing. The arcuate curved track includes an exit section and at least one pumping section along the arcuate curved track between the pump inlet and the pump outlet. As a roller rolls through the exit section, said compressible tube adjacent to said roller progressively expands from fully closed at a beginning of said exit section to fully open at the pump outlet where said roller breaks contact with said compressible tube. Said compressible tube is compressed to fully closed by at least one of said rollers.

In one hundred forty-seventh aspect of the present disclosure, the arcuate curved track of said pump housing includes at least two (2) pumping sections, the arcuate curved track further including at least one recess section located between said pumping sections along the arcuate curved track, and wherein said compressible tube at said recess section becomes decompressed to full expansion then compressed to fully closed when one (1) of said rollers rolls through said recess section.

In one hundred forty-eighth aspect of the present disclosure, the peristaltic pump includes a plurality of recess sections along said arcuate curved track upstream of the pump outlet, the angular spacing between the compression part of said recess section adjacent to the pump outlet and said exit section of said arcuate curved track being substantially the same as the angular spacing between each pair of immediately adjacent rollers.

In one hundred forty-ninth aspect of the present disclosure, said compression part of said recess section adjacent to the pump outlet has a shape complementing a shape of said exit section of said arcuate curved track to maintain the total fluid volume inside a section of said compressible tube extending from said recess section to the pump outlet substantially invariant when one of said rollers progressively rolls off said exit section of the arcuate curved track.

In one hundred fiftieth aspect of the present disclosure, the peristaltic pump has a plurality of recess sections respec-

tively interspersed between immediately adjacent pairs of a plurality of pumping sections.

In one hundred fifty-first aspect of the present disclosure, both angular spacing between adjacent pairs of recess sections, and angular spacing between said exit section of said arcuate curved track and an adjacent recess section to said exit section are substantially the same as the angular spacing between each pair of immediately adjacent roller.

In one hundred fifty-second aspect of the present disclosure, shapes of a plurality of recess sections of said arcuate curved track complement a shape of said exit section of said arcuate curved track to maintain a fluid volume in sections of said compressible tube at the plurality of recess sections and said exit section substantially invariant when one of said rollers progressively rolls off said exit section of the arcuate curved track.

In one hundred fifty-third aspect of the present disclosure, a speed of said rotor is programmably controlled to vary substantially in inverse proportion to the fluid volume change rate in said compressible tube due to its changing compression near the exit section of said arcuate curved track.

In one hundred fifty-fourth aspect of the present disclosure, a method for delivering liquid using a peristaltic pump includes a pump housing having a arcuate curved track formed therein that extends between a pump inlet and a pump outlet, a plurality of rollers that are attached to a rotor, the rollers having a substantially equal angular spacing between each pair of immediately adjacent rollers, the rotor being rotatable together with the rollers attached thereto inside said pump housing, and a compressible tube sandwiched between said rollers and the arcuate curved track of said pump housing. The arcuate curved track includes an exit section and at least one pumping section along the arcuate curved track between the pump inlet and the pump outlet. As a roller rolls through the exit section, said compressible tube adjacent to said roller progressively expands from fully closed at a beginning of said exit section to fully open at the pump outlet where said roller breaks contact with said compressible tube. Said compressible tube is compressed to fully closed by at least one of said rollers.

In one hundred fifty-fifth aspect of the present disclosure the arcuate curved track of said pump housing includes at least two (2) pumping sections, the arcuate curved track further including at least one recess section located between said pumping sections along the arcuate curved track, and wherein said compressible tube at said recess section becomes decompressed to full expansion then compressed to fully closed when one (1) of said rollers rolls through said recess section.

In one hundred fifty-sixth aspect of the present disclosure, the peristaltic pump includes a plurality of recess sections along said arcuate curved track upstream of the pump outlet; The angular spacing between the compression part of said recess section adjacent to the pump outlet and said exit section of said arcuate curved track being substantially the same as the angular spacing between each pair of immediately adjacent rollers.

In one hundred fifty-seventh aspect of the present disclosure, said compression part of said recess section adjacent to the pump outlet has a shape complementing a shape of said exit section of said arcuate curved track to maintain the total fluid volume inside a section of said compressible tube extending from said recess section to the pump outlet substantially invariant when one of said rollers progressively rolls off said exit section of the arcuate curved track.

In one hundred fifty-eighth aspect of the present disclosure, the pump has a plurality of recess sections respectively interspersed between immediately adjacent pairs of a plurality of pumping sections.

In one hundred fifty-ninth aspect of the present disclosure, both angular spacing between adjacent pairs of recess sections, and angular spacing between said exit section of said arcuate curved track and an adjacent recess section to said exit section are substantially the same as the angular spacing between each pair of immediately adjacent roller.

In one hundred sixtieth aspect of the present disclosure, shapes of a plurality of recess sections of said arcuate curved track complement a shape of said exit section of said arcuate curved track to maintain a fluid volume in sections of said compressible tube at the plurality of recess sections and said exit section substantially invariant when one of said rollers progressively rolls off said exit section of the arcuate curved track.

In one hundred sixty-first aspect of the present disclosure, a speed of said rotor of the peristaltic pump is programmably controlled to vary substantially in inverse proportion to the fluid volume change rate in said compressible tube due to its changing compression near the exit section of said arcuate curved track.

In one hundred sixty-second aspect of the present disclosure, the wavelength division multiplexer (WDM) includes a collimating optical element that magnifies an to produce an image of substantially the same size as the effective size of said collimating optical element, at least one dichroic filter located between said collimating optical element and said image, said dichroic filter separating the collimated beam of light into two (2) branches of distinctive colors, a focusing optical element located in one of said branches, the beam of light in said branch being focused to a spot having a diameter of less than 1.0 mm by said focusing optical element, and an image relay optical element located near the image produced by said collimating optical element in the other branch, said image relay optical element producing an image of said collimating optical element at substantially unit magnification.

In one hundred sixty-third aspect of the present disclosure, at least one additional dichroic filter is located between said image relay optical element and the image produced by said image relay optical element, wherein said dichroic filter produces two (2) branches of the beam of light having distinctive colors.

In one hundred sixty-fourth aspect of the present disclosure, another focusing optical element is located in one of said branches and focuses the beam of light in the branch into a spot having a diameter of less than 1.0 mm.

In one hundred sixty-fifth aspect of the present disclosure, successive combinations of said image relay optical element, dichroic filter and focusing optical element are cascaded to produce additional focused spots having a diameter of less than 1.0 mm for multiple colored bands of said beam of light.

In one hundred sixty-sixth aspect of the present disclosure, the dichroic filter is assembled using a template that include two (2) optically flat glass plates bonded together in optical contact, and wherein the dichroic filter is bonded to a filter holder using the template such that a coated filter surface of the dichroic filter is indented and optically parallel to a reference surface of the filter holder.

In one hundred sixty-seventh aspect of the present disclosure, the reference surface of the filter holder rests against an optically flat surface of an reference block included in the

WDM thereby providing consistent optical alignment when installing the dichroic filter into the WDM.

In one hundred sixty-eighth aspect of the present disclosure, a method for separating beam of light into colored bands using a WDM includes a collimating optical element that magnifies an to produce an image of substantially the same size as the effective size of said collimating optical element, at least one dichroic filter located between said collimating optical element and said image, said dichroic filter separating the collimated beam of light into two (2) branches of distinctive colors, a focusing optical element located in one of said branches, the beam of light in said branch being focused to a spot having a diameter of less than 1.0 mm by said focusing optical element, and an image relay optical element located near the image produced by said collimating optical element in the other branch, said image relay optical element producing an image of said collimating optical element at substantially unit magnification.

In one hundred sixty-ninth aspect of the present disclosure, at least one additional dichroic filter may be located between said image relay optical element and the image produced by said image relay optical element, wherein said dichroic filter produces two (2) branches of beam of light having distinctive colors.

In one hundred seventieth aspect of the present disclosure, another focusing optical element is located in one of said branches and focuses the beam of light in the branch into a spot having a diameter of less than 1.0 mm.

In one hundred seventy-first aspect of the present disclosure, successive combinations of said image relay optical element, dichroic filter and focusing optical element are cascaded to produce additional focused spots having a diameter of less than 1.0 mm for multiple colored bands of said beam of light.

In one hundred seventy-second aspect of the present disclosure, the dichroic filter is assembled using a template that include two (2) optically flat glass plates bonded together in optical contact, and wherein the dichroic filter is bonded to a filter holder using the template such that a coated filter surface of the dichroic filter is indented and optically parallel to a reference surface of the filter holder.

In one hundred seventy-third aspect of the present disclosure, the reference surface of the filter holder rests against an optically flat surface of an reference block included in the WDM thereby providing consistent optical alignment when installing the dichroic filter into the WDM.

In one aspect of the disclosure, a flow cytometer having a wavelength division multiplexer (WDM), which includes an extended light source providing light that forms an object, a collimating optical element that captures light from the extended light source and projects a magnified image of the object as a first light beam, and a first focusing optical element configured to focus the first light beam to a size smaller than the object of the extended light source to a first semiconductor detector.

In an additional aspect of the disclosure, a flow cytometer includes a viewing zone where a particle in a flow stream is illuminated by light, and a composite microscope objective. The composite microscope objective further includes a concave mirror configured to gather light scattered from or fluoresced by the illuminated particle and to reflect the light back towards the viewing zone, and an aberration corrector plate configured to reduce optical aberrations in the reflected light caused by the concave mirror.

In an additional aspect of the disclosure, a flow cytometer having a fluidic system, which includes a liquid pump for supplying liquid drawn from a reservoir, and a T-coupling having at least one inlet and two outlets. The inlet of the T-coupling receives the liquid from the liquid pump. The first fraction of the liquid received by the inlet flows via a first one of the outlets and via a bypass conduit back to the reservoir. The second fraction of the liquid received by the inlet flows via a second one of the outlets and via a particle filter to the outlet of the fluidic system.

In an additional aspect of the disclosure, a flow cytometer having a peristaltic pump, which includes a pump housing having an arcuate curved track formed therein that extends between a pump inlet and a pump outlet, a plurality of rollers that are attached to a rotor, the rollers having a substantially equal angular spacing between each pair of immediately adjacent rollers, the rotor being rotatable together with the rollers attached thereto inside the pump housing, a compressible tube sandwiched between the rollers and the arcuate curved track of the pump housing, and a recess section located between the at least two pumping sections. The compressible tube at the recess section is not fully closed. The arcuate curved track further includes an exit section and at least two pumping sections along the arcuate curved track between the pump inlet and the pump outlet. As one of the plurality of rollers rolls through the exit section, the compressible tube adjacent to the roller progressively expands from fully closed at a beginning of the exit section to fully open at the pump outlet where the roller breaks contact with the compressible tube. The compressible tube is compressed to fully closed by at least one of the plurality of rollers at the at least two pumping sections.

In an additional aspect of the disclosure, a flow cytometer having a laser diode (LD) system, which includes a LD for emitting a diverging beam of light from an edge thereof, the diverging beam of light having an elliptically shaped cross-sectional profile with both a major axis and a minor axis, a collimating lens for converting the diverging beam of light emitted from the LD into a collimated elliptical beam of light, the minor axis of the collimated elliptical beam of light being oriented parallel to a direction in which particles pass through a viewing zone, a beam compressing optical element for reducing the size of the elliptical beam of light at the viewing zone whereby a width of the elliptical beam of light oriented perpendicular to the direction in which the particles pass through the viewing zone is less than a width of a liquid sheath flow, and a cylindrical focusing element positioned adjacent to the viewing zone with an axis of the cylindrical focusing element being oriented perpendicular to the direction in which the particles pass through the viewing zone whereby the minor axis of the elliptical beam of light becomes focused at the viewing zone; and the size of the major axis of the elliptical beam of light at the viewing zone remains essentially unchanged.

The foregoing has outlined rather broadly the features and technical advantages of the present application in order that the detailed description that follows may be better understood. Additional features and advantages will be described hereinafter which form the subject of the claims. It should be appreciated by those skilled in the art that the conception and specific aspect disclosed may be readily utilized as a basis for modifying or designing other structures for carrying out the same purposes of the present application. It should also be realized by those skilled in the art that such equivalent constructions do not depart from the spirit and scope of the present application and the appended claims. The novel features which are believed to be characteristic of aspects, both as to its organization and method of operation, together with further objects and advantages will be better understood from the following description when considered in

connection with the accompanying figures. It is to be expressly understood, however, that each of the figures is provided for the purpose of illustration and description only and is not intended as a definition of the limits of the present claims.

## BRIEF DESCRIPTION OF THE DRAWINGS

FIG. **1** is a diagram schematically illustrating an embodiment of a flow cytometer in accordance with the present disclosure that includes:

a) a LD based optical illumination subsystem;

b) a composite microscope objective upon which light emitted from the LD based optical illumination subsystem impinges, the composite microscope objective having a fluid-passing channel formed therethrough with a particle illumination viewing zone located inside a cuvette thereof;

c) a fluidic system for supplying a pulsation free flow of sheath liquid to the fluid-passing channel formed through the composite microscope objective;

d) a peristaltic pump for introducing a pulsation free flow of sample liquid that carries cells or particles to be analyzed into the sheath flow of liquid supplied by the fluidic system; and

e) a wavelength division multiplexer ("WDM") having a zig-zag configuration for separating a beam of light into several different colored bands, the WDM receiving light via an optical fiber that is scattered from cells or particles as they pass through the composite microscope objective's fluid passing channel and are illuminated therein by light emitted from the LD based optical illumination subsystem.

FIG. **2** is a schematic view depicting a typical high power edge emitting LD that illustrates the fast and slow axes of light emitted therefrom.

FIG. **2**A shows a typical far field profile for a laser beam emitted from the LD chip depicted in FIG. **2**.

FIG. **3**A depicts a 3-dimensional view of a conventional LD based optical illumination subsystem for flow cytometric instruments together with the system's flow cell.

FIG. **3**B depicts a typical time dependent profile of light scattering from a cell or particle passing through the laser beam depicted in FIG. **3**A at the focus thereof within the system's flow cell.

FIG. **4**A is an elevational view of an alternative prior art LD based optical illumination subsystem configuration across the liquid flowing through the fluid-passing channel with the beam profile at the focus thereof in the flow cytometer system's viewing zone.

FIG. **4**B is a plan view along the liquid flowing through the fluid-passing channel of the alternative prior art LD based optical illumination subsystem depicted in FIG. **4**A.

FIG. **5**A is an elevational view across liquid flowing through the fluid-passing channel of the composite microscope objective depicted in FIG. **1**, wherein the LD's slow axis oriented transversely to the liquid flow in accordance with one aspect of the present disclosure.

FIG. **5**B is a plan view along liquid flowing through the fluid-passing channel of the composite microscope objective depicted in FIG. **1**, wherein the LD's slow axis oriented transversely to the liquid flow in accordance with one aspect of the present disclosure.

FIG. **5**C depicts a typical time dependent profile of light scattering from a cell or particle passing through the fluid passing channel of the composite microscope objective depicted in FIG. **1**.

FIG. **5**D depicts a perspective view of the cylindrical lens of the LD based optical subsystem coupled with the composite microscope objective in accordance with one aspect of the present disclosure.

FIG. **5**E depicts an enlarged view of the beam profile shown in FIG. **5**D.

FIG. **6** is a perspective view of an alternative embodiment of a LD based optical illumination subsystem in accordance with one aspect of the present disclosure adapted for use in a flow cytometer system in which a jet stream of liquid passes through the viewing zone.

FIG. **6**A is an enlarged perspective view of the alternative embodiment of a LD based optical illumination subsystem of FIG. **6** depicting in greater detail the jet stream of liquid passes through the viewing zone.

FIG. **7** is a perspective view of an alternative embodiment of a LD based optical illumination subsystem in accordance with one aspect of the present disclosure adapted for use in a flow cytometer system which orients the LD's slow axis parallel to the direction of liquid flowing through the fluid-passing channel of the composite microscope objective depicted in FIG. **1**.

FIG. **8** is a perspective view of a composite microscope objective in accordance with one aspect of the present disclosure adapted for use in the flow cytometer system depicted in FIG. **1**, the composite microscope objective having a fluid-passing channel formed therethrough with the particle illumination viewing zone located inside a cuvette therein.

FIG. **8**A is a perspective view of a combined microscope objective in accordance with one aspect of the present disclosure.

FIG. **8**B illustrates the combined microscope objective depicted in FIG. **8**A coupled with a flow cell in accordance with one aspect of the present disclosure.

FIG. **9**A is a cross-sectional elevational view of the composite microscope objective taken along the line **9**A-**9**A in FIG. **8** that includes ray traces from three (3) spatially separated locations in the viewing zone to an image plane for the objective illustrating scatter and fluorescence emission propagation.

FIGS. **9**B**1**-**9**B**3** are spot diagrams near the image plane depicted in FIG. **9**A for the three (3) spatially separated light emission locations depicted in FIG. **9**A.

FIG. **10** is a cross-sectional elevational view similar to that of FIG. **9**A for an alternative embodiment composite microscope objective in accordance with one aspect of the present disclosure that includes ray traces from three (3) spatially separated locations in a viewing zone therein to an image plane for the objective illustrating scatter and fluorescence emission propagation.

FIG. **11** is a perspective view of yet another alternative embodiment a composite microscope objective in accordance with one aspect of the present disclosure adapted for use in the flow cytometer system depicted in FIG. **1**, the alternative embodiment composite microscope objective having a fluid-passing channel formed therethrough with the particle illumination viewing zone located inside a cuvette therein.

FIG. **12** is a perspective view of an embodiment of a composite microscope objective in accordance with one aspect of the present disclosure adapted for use in the flow cytometer system depicted in FIG. **1**, adapted for use wherein a viewing zone is located inside the jet stream depicted in FIGS. **6** and **6**A.

FIG. **13** is a perspective view of an embodiment of a composite microscope objective in accordance with one

aspect of the present disclosure adapted for use wherein a viewing zone is located on the surface of a microscope slide.

FIG. **14** is a schematic diagram depicting a fluidic system in accordance with one aspect of the present disclosure for supplying stable liquid sheath flow to a flow cytometer flow cell that includes:

1. a small capsule located between a sheath liquid pump and the flow cell; and
2. a particle filter located between the small capsule and the flow cell, both the particle filter and the small capsule providing air reservoirs for dampening pump pulsations.

FIG. **15** is a schematic diagram depicting an embodiment of a fluidic subsystem similar to that illustrated in FIG. **14** that replaces the small capsule with a length of tubing for providing an air reservoir.

FIGS. **16**A and **16**B are histograms that compare measured particle flight times at the flow cell when the inlet portion of the particle filter has air trapped therein (FIG. **16**A), and when there is no air within the fluidic subsystem between the sheath liquid pump and the flow cell (FIG. **16**B).

FIG. **17** is a perspective view of a 3-roller peristaltic pump in accordance with one aspect of the present disclosure depicting the pump's rollers, tube and surrounding pump housing.

FIGS. **18**A through **18**D depict simplified views for several states of the 3-roller peristaltic pump depicted in FIG. **17** with the rollers in different locations.

FIG. **19** is a detailed longitudinal cross-sectional view of the peristaltic pump's tube being partially compressed by the pump's roller.

FIGS. **19**A and **19**B are detailed cross-sectional views orthogonal to the peristaltic pump's tube's length taken along the lines **19**A and **19**B in FIG. **19** illustrating the tube's partial compression by the roller.

FIGS. **20**A and **20**B are schematic diagrams illustrating the pump's rollers and tube viewed along the pump's circular coordinates to depicting the pulseless flow provided by the peristaltic pump.

FIG. **21** is a graph depicting the functional relationship with respect to the roller position when it rolls off the exit section of the compressible tube of:

1. the total volume of liquid in the exit half of the pump; as well as
2. the liquid volumes in the pump's:
   a. recess section; and
   b. exit section.

FIG. **22** is a simplified plan view of a 4-roller peristaltic pump in accordance with one aspect of the present disclosure.

FIG. **23** is a simplified plan view of a 6-roller peristaltic pump in accordance with one aspect of the present disclosure.

FIG. **24**A is a longitudinal cross-sectional illustration of rollers and a compressible tube for a pulsation minimizing 3-roller peristaltic pump in accordance with one aspect of the present disclosure having a rotor with programmable speed.

FIG. **24**B is simplified plan view illustrating the pulsation minimizing 3-roller peristaltic pump in accordance with one aspect of the present disclosure having a rotor with programmable speed.

FIG. **24**C is a graph depicting for the pulsation minimizing peristaltic pump depicted in FIG. **24**B having a programmable speed rotor:

1. negative volume change rate with respect to the roller position;
2. rotor speed; and
3. pump flow rate.

FIG. **25** is a diagram illustrating optical ray tracing for an exemplary 6 port wavelength division multiplexer ("WDM") using a zig-zag configuration in accordance with one aspect of the present disclosure.

FIG. **25**A illustrates a top view of a light detection assembly of the WDM illustrated in FIG. **25** in accordance with one aspect of the present disclosure.

FIG. **25**B illustrates a front perspective view of the light detection assembly of the WDM illustrated in FIGS. **25** and **25**A.

FIG. **26** is a diagram illustrating ray tracing of prior art collimating devices showing the device's limitation in collimating an extended light source.

FIG. **27** is a perspective illustration of an embodiment of a 6 port WDM using a combination of zig-zag and branched configurations in accordance with one aspect of the present disclosure.

FIG. **28** is a perspective illustration of another embodiment of a WDM having concave dichroic filters in accordance with one aspect of the present disclosure.

FIGS. **29**A and **29**B are perspective illustrations depicting an assembly process for constructing a replaceable dichroic filter assembly for a reconfigurable WDM in accordance with the present disclosure.

FIG. **29**C is a perspective illustration of a replaceable dichroic filter assembly build in accordance with the illustrations of FIGS. **29**A and **29**B.

FIGS. **30**A and **30**B are perspective illustrations of a WDM in accordance with one aspect of the present disclosure depicting installing into the WDM the replaceable dichroic filter assembly depicted in FIG. **29**C and its removal therefrom.

FIG. **31** is a diagram schematically illustrating an optical system with a single light source in accordance with one aspect of the present disclosure.

FIG. **32** is a diagram schematically illustrating an optical system with multiple light sources in accordance with one aspect of the present disclosure.

FIG. **33** illustrates an enlarged view of beams of light shown in FIG. **32**.

FIG. **34** is a diagram schematically illustrating an optical system with chromatic compensation elements in accordance with one aspect of the present disclosure.

FIG. **35** is a diagram schematically illustrating a power monitoring system in accordance with one aspect of the present disclosure.

FIG. **36** is a diagram schematically illustrating an optical system in accordance with one aspect of the present disclosure.

FIG. **37** is a diagram schematically illustrating an axial light loss detection system in accordance with one aspect of the present disclosure.

FIG. **38** is a diagram schematically illustrating an axial light loss detection system coupled with a second light detection system in accordance with one aspect of the present disclosure.

DETAILED DESCRIPTION

Flow Cytometer

A flow cytometer system may include one or more following components.

1. A flow cell through which a liquid stream, usually called a sheath flow, carries and hydrodynamically aligns cells or particles so that they pass single file through the flow cell.
2. A measuring subsystem system coupled to the flow cell that detects cells or particles passing through the flow cell and is usually either:
   a. an impedance or conductivity measuring subsystem; or
   b. an optical illumination subsystem together with an optical sensing subsystem.
3. A conversion subsystem for converting the output signal from the measuring subsystem into computer processable data.
4. A computer for analyzing the data produced by the conversion subsystem.

The optical illumination subsystem provides a collimated and then focused beam of light, usually laser light of a single wavelength, that impinges upon the hydrodynamically-focused stream of liquid passing through the flow cell. Accordingly, the flow cytometer system may have one or more light sources that may include:

1. one or more lamps, e.g., mercury or xenon;
2. one or more high-power water-cooled lasers, e.g., argon, krypton or dye laser;
3. one or more low-power air-cooled lasers, e.g., argon (488 nm), HeNe (red-633 nm), HeNe (green) and HeCd (UV); and/or
4. one or more diode lasers (blue, green, red and violet).

The optical sensing subsystem includes one or more detectors aimed where the focused liquid stream passes through the light beam. Such detectors may include:

1. detectors in line with the light beam (Forward Scatter or FSC);
2. detectors perpendicular to it (Side Scatter or SSC); and
3. fluorescence detectors.

Each suspended particle passing through the beam scatters the light, and fluorescent material present in the particle or attached to the particle excited by the impinging light emit light at a longer wavelength than that of the impinging light.

Detecting and analyzing brightness changes in a combination of scattered and fluorescent light at each detector (one for each fluorescent emission peak) permits deriving various types of information about the physical and chemical structure of each individual particle. FSC correlates with cell volume. Due to light being scattered off of internal components within a cell, SSC depends on the inner complexity of the particle (i.e., shape of the nucleus, the amount and type of cytoplasmic granules or the membrane roughness). Some flow cytometers omit a fluorescence detector and detect only scattered light. Other flow cytometers form images of each cell's fluorescence, scattered light, and transmitted light. The flow cytometer system's conversion subsystem, which may include one or more amplifiers which may be either linear or logarithmic, generally includes one or more Analogue-to-Digital Converters ("ADCs") for converting the measuring subsystem's output signal into data that is then processed by the computer.

Modern flow cytometers usually include up to four (4) lasers and numerous fluorescence detectors. Increasing the number of lasers and detectors permits labeling cells with several different antibodies, and can more precisely identify a target population by their phenotypic markers. Some instruments can even capture digital images of individual cells, allowing for the analysis of a fluorescent signal location within or on the surface of cells.

FIG. **1** depicts a flow cytometer in accordance with one aspect of the present disclosure identified by the general reference number **40**. The flow cytometer **40** may include:

1. a LD based optical subsystem **50**;
2. a composite microscope objective **60**;
3. a fluidic subsystem **70** for supplying a liquid sheath flow;
4. a peristaltic pump **80** for injecting a liquid sample flow that contains particles to be analyzed into the liquid sheath flow supplied by the fluidic subsystem **70**, the liquid sample flow becoming hydrodynamically focused by the liquid sheath flow passes through a viewing zone with the composite microscope objective **60** gathering and imaging light scattered and/or fluoresced by particles in the viewing zone;
5. an optical fiber **852** that receives light scattered and/or fluoresced by particles in the viewing zone that the composite microscope objective **60** gathers and images;
6. a wavelength division multiplexer **90** ("WDM **90**") for optically processing scattered and/or fluoresced light received from the optical fiber **852**; and
7. a photodetector system **938** to detect the light processed by the WDM **90**.

Optical Subsystem **50**

In most of the instruments, particles of interest, such as blood cells or microspheres, are carried by the sheath flow using hydrodynamic focusing into a viewing zone inside a cuvette or jet stream and illuminated there by a focused laser beam. The technique provides the means to accurately identify and count particles of interest without being overwhelmed by background noise occurring outside a registration time window (Practical Flow Cytometry, Howard M. Shapiro, Wiley (2003) ISBN 0471411256). To increase detection sensitivity, the cross section of the focused laser beam is usually elliptical, with the minor axis along the direction of flow. In order to maintain the threshold integrity, the laser profile must have a smooth or bell shaped profile along the flow direction. One common method for producing such an beam is to elongate a 5 nearly collimated circular Gaussian beam along the direction of flow with a beam expander made of either prism or cylindrical lens pair, then focus the beam down with a spherical lens. Since the shape of the beam at the focus is the spatial Fourier transform of the beam at far field, this produces a Gaussian shaped elliptical spot with minor axis along the flow.

Conventional lasers are expensive, bulky and power hungry. More recently, laser diodes ("LD") have become available. Differing from conventional lasers, the new generation of LDs is cost effective, compact and power efficient, and shows great promise for new generation of compact biomedical instruments. A LD emits light having an elliptical cross-section with the ellipse's major axis, frequently called the fast axis, perpendicular to the LD's junction, and the ellipse's minor axis, frequently called the slow axis, parallel to the LD's junction. Unfortunately, the beam quality of a typical LD, particularly along its fast axis, leaves much to be desired, preventing its wide acceptance in flow cytometric applications.

In principle, the quality of the LD beam can be significantly improved by spatial filtering. If a small pinhole or a single mode optical fiber is positioned at the focal point of a lens, such that it only accepts the lowest order spatial mode, the beam passing through the pinhole or single mode

optical fiber will be of nearly perfect Gaussian shape. U.S. Pat. No. 5,788,927 discloses that such a beam can then be collimated and expanded in the direction of flow through the cytometer, and finally focused down to an elliptical shaped Gaussian beam with minor axis along the flow direction. Unfortunately, the size of desktop instrumentation limits the diameter of a pinhole to less than 5 micron. The core size of a visible wavelength single mode optical fiber also has a similar dimension. The challenge to manufacture such a precision spatial filter and maintain its long-term stability not only increases the cost of LD based laser system, but also reduces its reliability.

More recently, in an effort to reduce the possible side lobes due to the edge effect of limited numerical aperture of collimating lens, U.S. Pat. No. 6,713,019 ("the '019 patent") discloses rotating the LD by ninety degrees (90°) such that its slow axis is parallel to the direction of flow. A beam diffusing section, such as a concave cylindrical lens, is then introduced to diffuse the collimated beam in the direction perpendicular to the flow, followed by a beam spot forming section, such as a spherical focusing lens, to form an elliptical spot within the cytometer's particle viewing zone. As described in detail in the '019 patent, the laser beam after the spot forming section is extremely astigmatic. In particular, the width of the beam at the viewing zone in the direction perpendicular to the flow is comparable or even wider than the width of the flow channel. This not only reduces the amount of laser energy impinging upon the particle and consequently the signal intensity, but also increases undesired background scattering from the liquid-flow cell interface. Instead of rotating the LD, U.S. Pat. Nos. 7,385,682 and 7,561,267 disclose using a large numerical aperture aspheric lens for LD collimation. Such a design, however, cannot correct the fringe effect inherent in the LD's beam profile. Consequently, there presently exists a need for a simple LD based optical system for use in flow cytometers that can reliably produce a focused elliptical beam with near Gaussian shape along its minor axis and a width along major axis.

In accordance with one aspect of the present disclosure, the optical subsystem **50** may include a LD **501** that, as depicted in greater detail in FIG. **2**, emits a diverging beam of light from an edge thereof. As more graphically depicted in FIGS. **2** and **2**A, the diverging beam of light has an elliptically shaped cross-sectional profile with both a major axis, a.k.a. the fast axis, and a minor axis, a.k.a. the slow axis. The diverging beam of light emitted from the LD **501** may impinge upon a collimating lens **502** which converts the diverging beam of light emitted by LD **501** into a collimated beam of light having an elliptical cross-section. Although not essential, the optical subsystem **50** may also include an optional mirror **503** positioned to direct the collimated elliptical beam of light towards the composite microscope objective **60**. A plano-convex lens **504**, positioned near the composite microscope objective **60**, may reduce the major axis of the elliptically shaped beam of light that is oriented perpendicular to the direction in which the liquid sample and the surrounding liquid sheath flow through the viewing zone within the composite microscope objective **60**. At the viewing zone, the width of the elliptically shaped beam of light:

1. perpendicular to the direction in which the liquid sample flow passes through the viewing zone may be slightly less than the width of the liquid sheath flow; while
2. still sufficiently wide so particles in the sample flow pass through a nearly flat portion of the elliptically shaped beam of light at the beam's maximum intensity.

In accordance with one aspect of the present disclosure, it is apparent to those skilled in the art that the plano-convex lens **504** may be replaced by other types of optical elements such as an achromatic doublet lens or combination of spherical lenses, cylindrical lenses, and/or prism pairs. Alternatively, the mirror **503** and the lens **504** may also be replaced by a concave mirror. For polarization sensitive applications of the flow cytometer **40**, an optional polarization conditioning element, such as a half-wave plate, may also be placed in the collimated section of the beam of light extending from the collimating lens **502** to the lens **504**. Finally, before passing through the viewing zone the beam of light may pass through a high power cylindrical lens **505**, positioned adjacent to the viewing zone. As depicted in FIG. **1**, the axis of the cylindrical lens **505** is oriented perpendicular to the direction in which the liquid sample flow passes through the viewing zone, and the focal length of the cylindrical lens **505** produces a tight focusing of the beam of light's minor axis at the viewing zone.

An advantage of the optical subsystem **50** in comparison with conventional LD based optical subsystem may be discerned more clearly in FIGS. **2** and **2**A. Most commercially available laser diodes suitable for use in a flow cytometer emit a beam of light from an edge thereof. As depicted in FIG. **2**, a gain section **509** of such a LD chip **510** is highly confined in the transverse direction indicated by an arrow **511**. Consequently, to achieve high output power LD manufacturers often sacrifice beam quality, particularly along the transverse or fast axis direction that is oriented parallel to the arrow **511**. FIG. **2**A shows this characteristic of light emitted from a LD wherein multiple fringes **512** due to gain confinement are clearly visible at the far field in the minor axis direction of the emitted beam of light. It should be noted that the fringes **512** appearing in the illustration of FIG. **2**A contain only a minor amount of total energy in the beam of light, and therefore have little impact on the conventional M-square characterization of the corresponding beam profile. However, as discussed in greater detail below, the fringes **512** do have a detrimental effect on the performance of conventional flow cytometers. Alternatively, gain confinement along the slow axis direction of an edge emitting LD that is oriented perpendicular to the arrow **511** is much more relaxed. Consequently, as shown in FIG. **2**A, the far field beam profile is much smoother along the slow axis of the LD's beam of light.

FIG. **3**A depicts a conventional LD based optical subsystem for a flow cytometer. Those elements depicted in FIG. **3**A that are common to the optical subsystem **50** illustrated in FIG. **1** carry the same reference numeral distinguished by a prime (') designation. As depicted in FIG. **3**A, the conventional optical subsystem orients the fast axis of the LD **501** parallel to the direction in which the liquid sample flow passes through the viewing zone. In its most simplified configuration, the elliptical beam profile of the LD **501'** is directly transposed by the spherical focusing lens **504'** into the viewing zone. In an attempt to achieve optimal aspect ratio for the focused beam of light, various different conventional LD based optical subsystems have also included beam shaping optical elements in addition to those depicted in FIG. **3**A.

The detrimental effect of fringes **512** along the fast axis of the LD **501'** for conventional optical subsystem configurations clearly appears in the light scattering time profile depicted in FIG. **3**B. Since scattering or fluorescence intensity is directly proportional to the local laser power impinging upon a particle, any fine structure in the beam of light's profile along the direction in which the liquid sample flow

passes through the viewing zone will appear in the time profile of the signal produced by the flow cytometer. Such structures in the time profile are indistinguishable from signals generated by small particles, and will therefore cause the flow cytometer to trigger falsely and misidentify particles. In addition, the fringes **512** will also lead to uncertainty in the measurement of other cytometric parameters, such as in the area and width of the pulse depicted in FIG. **3**B.

FIGS. **4**A and **4**B depict a yet another prior art optical subsystem for LD based flow cytometric applications disclosed in the '019 patent identified previously. Those elements depicted in FIGS. **4**A and **4**B that are common to the optical subsystem **50** illustrated either in FIG. **1** or **3**A carry the same reference numeral distinguished by a double prime (") designation. As depicted in FIGS. **4**A and **4**B, by orienting the slow axis of the LD **501"** parallel to the direction in which the liquid sample flow passes through the viewing zone the optical subsystem depicted in FIGS. **4**A & **4**B effectively overcomes the problem caused by the fringes **512** as described above. Unfortunately, the beam-diffusing element **513"** placed before the spherical focusing lens **504"** in FIGS. **4**A and **4**B to diffuse the beam of light perpendicular to the direction in which the liquid sample flow passes through the viewing zone produces a highly astigmatic beam of light near the viewing zone. Specifically, focusing this astigmatic beam of light at the viewing zone in the direction in which the liquid sample flow passes through the viewing zone increases the width of the beam of light perpendicular to the direction in which the liquid sample flow passes through the viewing zone so the beam's width become similar to or even wider than the sheath flow. Consequently, the optical subsystem depicted in FIGS. **4**A and **4**B not only diminishes the amount of light energy impinging upon particles flowing through the viewing zone, the optical subsystem also increases undesirable scattering of light from the interface between the liquid sheath flow and adjacent parts of the composite microscope objective **60**.

FIG. **5** highlights the main differences between the optical subsystem disclosed in the '019 patent and the optical subsystem **50** depicted in FIG. **1**. Instead of placing an out-of-plane beam-diffusing element **513"** before the spherical beam focusing lens **504** as shown in FIG. **4**, the high power cylindrical lens **505**, depicted in FIGS. **5**A and **5**B as a cylindrical plano-convex lens, may be placed along the beam of light after the spherical beam focusing lens **504** and may be juxtaposed with the composite microscope objective **60**. As shown in FIGS. **5**A and **5**B, the cylindrical lens **505** may focus the minor axis of the beam of light in the viewing zone while leaving the major axis of the beam of light essentially unchanged. Consequently, the optical subsystem **50** depicted in FIGS. **1**, **5**A and **5**B may establish a beam of light profile at the viewing zone which is elliptical with:

1. a tightly focused minor axis that spans across the combined liquid sample and sheath flows; and
2. a smooth minor axis profile in the direction of the combined liquid sample and sheath flows that is the Fourier conjugate of the far field beam profile along the slow axis of LD **501**.

Meanwhile, as shown in FIG. **5**B, the out-of-plane beam width may be unaffected by the cylindrical lens **505**. FIG. **5**C shows a measured time profile of light scattered from a micro particle using the optical subsystem **50** depicted in FIGS. **1**, **5**A and **5**B. The LD **501** used in making the measurement presented in FIG. **5**C is the same as that used in generating the measured time profile of light scattered from a micro particle appearing in FIG. **3**B. As shown in FIG. **5**C, the side lobes caused by the fringes **512** along the fast axis of the LD **501** no longer have any material effect on performance of the flow cytometer **40**.

FIG. **5**D illustrates a perspective view of the cylindrical lens **505** of the LD based optical subsystem **50** coupled with the composite microscope objective **60** in accordance with some embodiments of the present disclosure. A beam of light may pass through the cylindrical lens **505** and a cuvette **603** of the microscope objective **60** substantially along the z axis and establish a beam profile **524** on a x-y plane at the viewing zone inside a flow channel **604** of the composite microscope objective **60**.

FIG. **5**E illustrates an enlarged view of the beam profile **524** shown in FIG. **5**D in accordance with some embodiments of the present disclosure. FIG. **5**E shows that the minor axis of the beam of light may be along the y axis and substantially parallel to the direction of liquid sample and sheath flows and the major axis of the beam of light may be along the x axis and substantially perpendicular to the direction of liquid sample and sheath flows.

FIG. **6** depicts yet another alternative diode laser based optical subsystem in accordance with some embodiments of the present disclosure adapted for use in a flow cytometer. Those elements depicted in FIGS. **6** and **6**A that are common to the optical subsystem **50** illustrated in FIGS. **1**, **5**A and **5**B carry the same reference numeral distinguished by a triple prime ("') designation. The optical subsystem **50"'** depicted in FIGS. **6**A and **6**B is almost identical to that shown in FIGS. **1**, **5**A and **5**B except that the viewing zone occurs without a composite microscope objective **60** because it occurs in a free-flowing jet stream **519** that includes both the sample and sheath flows that is emitted from a nozzle **518**. Consequently, for the configuration of the optical subsystem **50"'** depicted in FIGS. **6**A and **6**B, the high power cylindrical lens **505** is detached from the viewing zone that is located within the jet stream **519**.

In the exemplary embodiments of the present disclosure depicted in FIGS. **1**, **5**A, **5**B, **6**A and **6**B, the minor axis, i.e. the slow axis, of the LD **501** is substantially oriented perpendicular to the direction in which the liquid sample flow passes through the viewing zone. However, it will be apparent to those skilled in the art that using an alternative optical configuration the major axis, i.e. the fast axis, of the LD **501** may be reoriented to be perpendicular to the direction in which the liquid sample flow passes through the viewing zone. FIG. **7** depicts one example of such an alternative configuration of optical elements. Those elements depicted in FIG. **7** that are common to the optical subsystem **50** illustrated in FIGS. **1**, **5**A, **5**B, **6**A and **6**B carry the same reference numeral distinguished by a quadruple prime ("") designation. As shown, the slow axis of the LD **501""** is oriented in the z-direction. The beam of light emitted from the LD **501""** is then rotated to the in-plane y-direction by a pair of ninety degrees (90°) reflection mirrors **523***a* and **523***b*. In the illustration of FIG. **7**, a normal to the first elliptically-shaped light beam reorienting mirror **523***a* is oriented in the x-y plane at forty-five degrees (45°) to the x-axis, and a normal to the second elliptically-shaped light beam reorienting mirror **523***b* is oriented in the y-z plane at forty-five degrees (45°) to the z-axis.

Composite Microscope Objective **60**

Modern flow cytometers include a spatial filter, usually either a mechanical pinhole or a large core optical fiber, located at an image location of an objective lens to prevent undesired background light from entering the cytometer's detector(s). Because particles remain in the cytometer's viewing zone for a few microseconds, microscope objec-

tives with large numerical aperture must be used to maximize light collection efficiency. To support multiple spatially separated excitation laser beams in flow cytometers, as disclosed in U.S. Pat. No. 4,727,020, it is also desirable to use an objective with large field of view. In order to achieve these goals, U.S. Pat. Nos. 6,510,007 and 7,110,192 disclose an objective design using a modified apochromat with a gel-coupled or epoxy bonded near hemisphere lens as the optical element closest to the sample that is followed by multiple meniscus lenses. While such microscope objectives provide both a satisfactory numerical aperture and field of view, they significantly sacrificed image quality thereby:

1. limiting effective use of the spatial filter; and
2. exhibiting poor background light discrimination.

Further, such refractive microscope objectives are bulky, expensive to manufacture and often exhibit severe chromatic aberration. To overcome these limitations, Published Patent Cooperation Treaty ("PCT") Patent Application No. WO 01/27590 discloses an alternative objective design based on a spherical concave mirror. The design offers large numerical aperture and good image quality along the optical axis. However, due to its poor off-axis characteristics, such a design is unsuitable for flow cytometers having multiple, spatially separated laser beams.

FIG. **8** depicts one embodiment in accordance with the present disclosure for the composite microscope objective **60** depicted in FIGS. **1**, **5**A, **5**B and **7**. As depicted in FIG. **8**, the composite microscope objective **60** may image a viewing zone that is located inside a prismatically-shaped glass cuvette **603** within a small flow channel **604**, that may have a rectangular cross-sectional shape, through which passes the particle carried by combined liquid sample and sheath flows. A plano-concave back-surface mirror **601** included in the composite microscope objective **60** may be made of an optically transparent material that may have a refractive index similar to that of the glass cuvette **603**, such as glass or optical quality plastics. To minimize optical loss, the back-surface mirror **601** may include a flat front surface that is optically coupled to an abutting flat surface of the prismatically-shaped cuvette **603**. Optical coupling of the back-surface mirror **601** to the cuvette **603** may employ an index-matching gel, optical adhesive or direct optical bonding. Alternatively, the back-surface mirror **601** may also be formed integrally with the cuvette **603**.

The composite microscope objective **60** may also include a plano-aspheric corrector plate **602** that is also made of an optically transparent material that may have a refractive index similar to that of the glass cuvette **603**, such as glass or optical quality plastics. To reduce optical loss, a flat surface of the corrector plate **602** may be optically coupled to an abutting flat surface of the prismatically-shaped cuvette **603** on a face thereof that is diametrically opposite to the back-surface mirror **601**. Optical coupling of the corrector plate **602** to the cuvette **603** may employ an index-matching gel, optical adhesive or direct optical bonding. The aspheric surface of the corrector plate **602** furthest from the corrector plate **602** may carry an anti-reflective coating to reduce optical transmission loss, although such a coating is not a mandatory requirement for a composite microscope objective **60** in accordance with some embodiments of the present disclosure. The shape of the aspheric surface of the corrector plate **602** is similar to that in a classical Schmidt camera, (Schmidt, B., *Mitt. Hamburg Sternwart* 7 (36) 1932). As known by those skilled in the art, the corrector plate of a Schmidt camera includes a circularly shaped neutral zone where the corrector plate does not deviate rays of light passing through the plate. For use in the composite microscope objective **60**, outside of the neutral zone of the corrector plate **602**, where the plate thickness is thinnest, the corrector plate **602** may have negative optical power while inside the neutral zone the corrector plate **602** may have positive optical power. The exact shape of the aspheric corrector plate **602** may be readily obtained using any commercially available optical ray tracing tool by any person having ordinary skill in the art. Note that in the flow cytometer **40**, the beam of light generated by the optical subsystem **50** depicted in FIGS. **1**, **5**A, **5**B and **7** enters the cuvette **603** perpendicularly to the flow channel **604** through one (1) of the two (2) faces of the cuvette **603** that do not abut the back-surface mirror **601** or corrector plate **602**.

Combined Microscope Objective **65**

FIG. **8**A illustrates a perspective view of a combined microscope objective **65** in accordance with some embodiments of the present disclosure. The combined microscope objective **65** may include the composite microscope objective **60**, as illustrated in FIG. **8** and the cylindrical lens **505**. The cylindrical lens **505** may direct a beam of light to the viewing zone in the flow channel **604** to illuminate particles in the sample flow. After particles are illuminated in the viewing zone, the composite microscope objective **60** then may collect imaging light scattered from and fluoresced by particles within the view zone.

FIG. **8**B illustrates a perspective view of the combined microscope objective **65** coupled with a flow cell **619** in according with some embodiments of the present disclosure. Liquid sample **623** may be pumped up from a sample tube **621** into a flow section **620** of the flow cell **619** by a pump **624**. The pump **624** may be the peristaltic pump **80**, as illustrated in FIG. **17**. Liquid sheath **622** may be also pumped into the flow section **620** of the flow cell **619**. The pump for pumping the liquid sheath **622** into the flow cell **619** may be a part of the fluidic system **70**, as illustrated in FIG. **14** or **15**. The liquid sample **623** may be combined with the liquid sheath **622** in the flow section **620** of the flow cell **619** and then hydrodynamically focused within the viewing zone inside the flow channel **604** of the combined microscope objective **65**. The combined microscope objective **65** or the composite microscope objective **60** may be positioned on the flow cell **619**. Persons skilled in the art may also refer to a combination of the microscope objective **65** or the composite microscope objective **60** and the flow cell **619** as a flow cell. The cross-sectional area of the flow section **620** at the top of the flow cell **619** may be smaller than the cross-sectional area of the flow section **620** at the bottom of the flow cell **619** to facilitate hydrodynamic focusing of the liquid sample **623** in the viewing zone. It should be noted that the various aspects of the present disclosure are not limited to specific direction of liquid sheath or sample flow and specific shape of the flow cell or the microscope objective.

FIG. **9**A depicts the result of ray tracing for the embodiment of composite microscope objective **60** illustrated in FIG. **8**. As depicted in FIG. **9**A, scatter and fluorescence emissions from three (3) spatially separated locations in the flow channel **604** near the center of the cuvette **603** may:

1. initially propagate toward back-surface mirror **601** and pass first through the cuvette **603** to be internally reflected by the back-surface mirror **601**;
2. then pass through the cuvette **603**;
3. subsequently pass through the aspheric corrector plate **602**; and
4. finally forms three (3) distinct images near an image plane **605**.

Note that rays traversing the composite microscope objective **60** depicted in FIG. **9**A are nearly optically-uniform and that light emitted near the center of the cuvette **603** traverses the corrector plate **602** at near normal incidence. Consequently, the composite microscope objective **60** introduces very little chromatic dispersion in light emitted near the center of the cuvette **603**.

Further, it is well known in the astrophysics community that Schmidt camera offers the unparalleled combination of a fast focal ratio and a large field of view with near diffraction limited optical performance. The principal drawback in a conventional Schmidt camera is that the image surface lies inside the instrument. For the composite microscope objective **60**, light near the center of the cuvette **603** propagates opposite to that of a conventional Schmidt camera and therefore the image surface lies outside the composite microscope objective **60**. Consequently, the present disclosure takes full advantage of the optical performance of the Schmidt camera without experiencing its limitation. FIGS. **9**B **1** through **9**B**3** depict spot diagrams near the image plane **605** for three (3) emission locations, **606**, **607**, **608** in viewing zone within the flow channel **604** that may be separated 150 micron from each other. The diameters of all images depicted in FIGS. **9**B**1** through **9**B**3** may be less than 35 microns.

Light emitted from the viewing zone within the flow channel **604** of the composite microscope objective **60** depicted in FIGS. **8** and **9**A that traverses the aspheric corrector plate **602** may suffer from a small amount of chromatic aberration. FIG. **10** depicts an alternative embodiment for the composite microscope objective **60** depicted in FIGS. **1**, **5**A, **5**B and **7** in accordance with some embodiments of the present disclosure. Those elements depicted in FIG. **10** that are common to the composite microscope objective **60** illustrated in FIGS. **8** and **9**A carry the same reference numeral distinguished by a prime (') designation. The shapes of the back-surface mirror **601'** and the aberration corrector plate **602'** depicted in FIG. **10** are modified slightly to produce collimated afocal images of the emission locations near the viewing zone within the flow channel **604'**. In FIG. **10** the composite microscope objective **60'** may include a chromatic compensating doublet lens **609** inserted between the corrector plate **602'** and the image plane **605'**. In addition to focusing the light emitted from the corrector plate **602'** onto the image plane **605'**, the doublet lens **609** may also serve to further reduce the residual chromatic aberration introduced by the aspheric corrector plate **602'**.

It is not essential that the flat surface of the corrector plate **602** to be optically coupled to the cuvette **603**. FIG. **11** depicts an alternative embodiment of the composite microscope objective **60** in accordance with some embodiments of the present disclosure. Those elements depicted in FIG. **11** that are common to the composite microscope objective **60** illustrated in FIGS. **8** and **9**A carry the same reference numeral distinguished by a double prime (") designation. FIG. **11** depicts the aberration corrector plate **602"** optically decoupled from the cuvette **603"**. Although not essential for operation of the composite microscope objective **60"**, to improve the light transmission efficiency both surfaces of the corrector plate **602"** and the exposed flat surface of the cuvette **603"** may carry an anti-reflectively coating. It is understood that the corrector plate **602"** shown in FIG. **11** may be held in fixed relationship to the combined back-surface mirror **601** and cuvette **603** by a mechanical support not depicted in FIG. **11**. Similar to the composite microscope objective **60** and **60'** depicted respectively in FIGS. **9**A and **10**, the composite microscope objective **60"** with detached corrector plate **602"** may be configured to provide either finite focal length image, or an afocal system which in turn is focused to a finite distance image plane by an additional chromatic compensating doublet lens **609**.

FIG. **12** depicts yet another alternative embodiment of the composite microscope objective **60**. Those elements depicted in FIG. **12** that are common to the composite microscope objective **60** illustrated in FIGS. **8**, **9**A and **11** carry the same reference numeral distinguished by a triple prime ("') designation. The composite microscope objective **60"** depicted in FIG. **12** is adapted for collecting scatter and fluorescence emissions from cells or other microscopic particles carried in the jet stream **519** emitted by the nozzle **518**. The composite microscope objective **60"** may include a concave, spherically shaped, front surface mirror **610** and an aberration corrector plate **612**. The front surface mirror **610** may be made of glass or other types of hard material with a highly reflective coating on the concave surface **611** or made of metal with polished concave surface **611**. Similar to the corrector plate **602**, the plano-aspheric corrector plate **612** may be made of a thin piece of transparent material, such as glass or optical quality plastics. The aspheric surface may be formed on either side of the corrector plate **612**. Both surfaces of the corrector plate **612** may be coated with an anti-reflective coating to reduce optical transmission loss, although such a coating is not a mandatory requirement for a corrector plate **612** in accordance with some embodiments of the present disclosure. It is understood that the front surface mirror **610** and the corrector plate **612** may be held in fixed relationship to each other by a mechanical support not depicted in FIG. **12**. Scatter and fluorescence light emitted from cells or other types of microscopic particles in the viewing zone inside the jet stream **519** may be reflected by the concave surface **611** of the front surface mirror **610**. The aberration due to reflection from the concave surface **611** may be corrected by the corrector plate **612** after light traverses through the corrector plate **612**. It is understood by those having skill in the art that the composite microscope objective **60"** may be configured to provide either a finite focused image similar to that depicted in FIG. **9**A, or a collimated afocal image which is focused at finite distance from the composite microscope objective **60"** by a chromatic aberration correction doublet similar to the doublet lens **609** depicted in FIG. **10**.

FIG. **13** depicts an adaptation of the composite microscope objective **60** for imaging specimens fixed to the surface of a transparent substrate such as a glass slide. Those elements depicted in FIG. **13** that are common to the composite microscope objective **60** illustrated in FIGS. **8**, **9**A and **11** carry the same reference numeral distinguished by a quadruple prime ("") designation. The composite microscope objective **60""** depicted in FIG. **13** may include two (2) optical elements, one a plano-concave back surface mirror **617** made of a transparent material, such as glass or optical quality plastics, and an aberration corrector plate **618**. As depicted in FIG. **13**, the specimen to be imaged may be fixed to a front surface **615** of a transparent, usually glass slide **616**. The slide **616** may be optically coupled, for example, using a thin layer of index matching fluid, to the flat surface of the back surface mirror **617**. Scatter and fluorescence light emitted by the specimen may:

1. initially propagate through the slide **616** and the back surface mirror **617**;
2. be internally reflected by the back surface mirror **617** back through the slide **616**;

3. then pass through the corrector plate **618**; and
4. finally form an image at an image plane that is located beyond the corrector plate **618**.

Fluidic Subsystem **70**

The performance of a flow cytometer depends critically on a stable liquid sheath flow. In particular, flow cytometers that have multiple spatially separated excitation laser beams or perform droplet sorting rely on a constant velocity of the liquid sheath flow for timing synchronization. As disclosed in U.S. Pat. No. 5,245,318, conventional flow cytometers provide a stable liquid sheath flow by using an airtight fluidic system that either:

1. applies constant air pressure in a sheath liquid reservoir to push the fluid through the flow cell; or
2. by sucking the fluid from the sheath liquid reservoir through the flow cell using a vacuum pump.

These systems are bulky, expensive to manufacture, and prone to failure. More recently, U.S. Pat. No. 8,187,888 discloses including a sheath liquid subsystem that pumps the liquid sheath flow from the sheath liquid reservoir into the viewing zone and a waste sheath liquid pump that pumps waste sheath liquid from the viewing zone into the waste tank. Although it appears that the disclosed sheath liquid subsystem has never been used in velocity critical flow cytometers, this patent reports that the disclosed sheath liquid subsystem overcomes most of the drawbacks of conventional sheath liquid flow stabilization by:

1. damping pump pulsations by locating:
   a. one fluidic capacitor between the sheath liquid pump and the flow cell; and
   b. another fluidic capacitor between the flow cell and the waste pump; and
2. a pump controller whose operation is responsive to a pressure sensor that measures the pressure difference between the inlet and outlet of the flow cell.

However, the disclosed sheath liquid subsystem has other limitations. For example, the pressure sensor located near the outlet of the flow cell could be a potential source of contamination.

FIG. **14** depicts a fluidic subsystem **70** in accordance with some embodiments of the present disclosure that includes a sheath liquid reservoir **702** and a liquid pump **701** that draws sheath liquid from the sheath liquid reservoir **702**. The liquid pump **701** may be a diaphragm pump, a peristaltic pump, a piston pump, or any types of continuous fluid pump. An outlet of the liquid pump **701** may connect to an inlet of a T-coupling **703** that receives sheath liquid from the liquid pump **701**. The T-coupling **703** may have two (2) outlets. The first outlet may connect to a bypass conduit **710** for returning a fraction of the sheath liquid received by the T-coupling **703** from the liquid pump **701** back to the sheath liquid reservoir **702**. Returning a fraction of the sheath liquid received by the T-coupling **703** from the liquid pump **701** back to the sheath liquid reservoir **702** is advantageous for two (2) reasons.

1. As depicted in FIG. **14**, the bypass conduit **710** is left open to the surrounding atmosphere which effectively dampens pulsation to thereby significantly reducing the pulsation inherent in the operation of the liquid pump **701**.
2. Returning a fraction of the sheath liquid received by the T-coupling **703** from the liquid pump **701** back to the sheath liquid reservoir **702** also effectively reduces the throughput of the liquid pump **701** thereby allowing the use of comparatively high flow rate, low cost pumps in the flow cytometer **40**.

Denote the flow resistance of the bypass conduit **710** as "r" and the flow resistance of path from the T-coupling **703** to the flow channel **604** of the cuvette **603** as "R." The output resistance to the sheath pump $R_p$ is then equal to:

$$R_p \frac{rR}{r+R} \tag{1}$$

Since R>>r, the behavior of the liquid pump **701** is therefore dominated by the resistance of the bypass conduit **710** whose fluid dynamic properties may be temperature insensitive. Thus, the configuration of the fluidic subsystem **70** depicted in FIG. **14** may also provide a simple mechanism for achieving a temperature insensitive sheath liquid flow to the flow channel **604**. As depicted in FIG. **14**, the second outlet of the T-coupling **703** connects to the flow channel **604** that extends through the cuvette **603** first via a small reservoir capsule **704** and then via a filter cartridge **705**. As depicted in FIG. **15**, a piece of tubing **704'**, which may be, for example, about 4 ft. long may be substituted for the small reservoir capsule **704**. During initialization of the fluidic subsystem **70**, some air becomes trapped in the filter cartridge **705** near its inlet which as depicted in FIG. **15** is located above an outlet of the filter cartridge **705**. The air trapped in the filter cartridge **705** may act as an additional fluidic capacitor effectively reducing to negligible level the pulsation in sheath liquid emitted into the flow channel **604**. Due to the large fluidic resistance at the flow channel **604**, the air trapped inside the filter cartridge **705** becomes compressed. When the liquid pump **701** is turned off, a trapped in the filter cartridge **705** is pushed back towards the T-coupling **703** analogous to a discharging capacitor. Without the small reservoir capsule **704**, some air ejected from the filter cartridge **705** reaches the bypass conduit **710** due to its low fluidic resistance, and will be pushed out of the fluidic subsystem **70** once the liquid pump **701** is turned on again. Without additional air supply, such a scenario will repeat until most of the air becomes purged from the fluidic subsystem **70** causing the filter cartridge **705** to lose its effectiveness as a pulsation damper. The purpose of the small reservoir capsule **704** or the piece of tubing **704'** is therefore to provide a reservoir for isolating the filter cartridge **705** from the bypass conduit **710** ensuring that air trapped inside the filter cartridge **705** remains within the fluidic subsystem **70** despite repeated on-off operations of the liquid pump **701**.

The pulsation damping effect of the trapped air near the inlet of the filter cartridge **705** is clearly evident in the histograms depicted in FIGS. **16**A and **16**B. FIG. **16**A depicts measured particle flight times at the flow channel **604** when a pocket of air is trapped near the inlet of the filter cartridge **705**. FIG. **16**B depicts measured particle flight times at the flow channel **604** when the trapped air is purged from the fluidic subsystem **70**. The result depicted in the histograms of FIGS. **16**A and **16**B is made using two (2) knife edge shaped laser beams focused near the center of the flow channel **604** that are spaced approximately 200 micrometers apart. The horizontal axis of the FIGS. **16**A and **16**B is the flight time a particle takes from one laser beam to the other measured by recording the peak arrival time of light scattered from the particle at ninety degrees (90°) from the excitation beams. In both cases, the average flight time for particles to cross the two laser beams is the same. As shown in FIG. **16**A, when the filter cartridge **705** retains some air, all particles take about the same amount of time to

cross the two laser beams. If the filter cartridge **705** retains no air, as shown in FIG. **16**B, the distribution of flight times not only broadens, but also becomes bimodal. In other words, some particles take less time while others take longer than average amount of time to cross the two laser beams, a phenomenon that can be easily attributed to sheath liquid velocity pulsation at the flow channel **604**.

In the embodiments of the present disclosure discussed so far, the fluidic resistance along bypass conduit **710** as well as between the T-coupling **703** and the flow channel **604** may not be adjustable. As should be apparent to those ordinary skilled in the art, flow restrictors such a fixed restrictor or adjustable valves **712**, **712'** and **711**, **711'** and may be advantageously inserted in the bypass conduit **710** and between the T-coupling **703** and the flow channel **604** to permit adjusting the flow rate through the flow channel **604**. Alternatively, the velocity of sheath liquid flowing through the flow channel **604** may also be adjusted using a liquid pump **701** that is driven by a variable speed brushless DC motor.

Peristaltic Pump **80**

Peristaltic pumps are volumetric pumps in which a set of linearly or circularly moving rollers progressively compress a compressible tube to propel the fluid through the tube. Peristaltic pumps are widely used particularly to pump clean/sterile or aggressive fluids to avoid cross contamination with exposed pump components. Conventional peristaltic pump exhibits a pulsation. Each time a roller rolls off the tube near the pump outlet, caused by the temporary increase of tube volume when the compressed tube expands back to its original shape. The pulsation is undesirable in applications that require smooth flow. Many attempts have been made in the past to reduce the pulsation. For example, U.S. Pat. Nos. 3,726,613 and 3,826,593 introduced a cam operated pusher which synchronously exerts an external pressure on the tube to compensate for the tube expansion. In U.S. Pat. No. 4,834,630, a plurality of tubes mounted on segmented rollers are joined together at the pump inlet and outlet by T-shaped couplers such that pulsations from individual tubes would be reduced by averaging. U.S. Pat. No. 7,645,127 proposed a pump tube with slightly larger inner diameter near the inlet so that the tube decompression near the pump outlet is compensated by the compression of a larger volume tube near the inlet. The various methods either significantly increased the complexity of the peristaltic pump or had limited success in reducing the pulsation effect.

A peristaltic pump **80** in accordance with some embodiments of the present disclosure is illustrated in FIG. **17**. The pump may include a housing **809** with arcuate curved track **808**, three rollers **810**, **811** and **812** attached to a rotor **816** rotatable within the housing **809**, and a compressible tube **807** sandwiched between the arcuate curved track **808** of the housing **809** and the rollers **810**, **811** and **812**, in particular at the surface **814** of rollers **810**, **811** and **812**. As depicted schematically in FIGS. **18**A through **18**D, the rollers **810**, **811** and **812** of the peristaltic pump **80** are spaced at substantially equal angular distances, separations or spacings from each other around the perimeter of the rotor **816**. The rollers **810**, **811**, **812** may rotate about a longitudinal axis thereof, so that limited friction occurs between the rollers and the compressible tube. This may also apply for the subsequently described rollers. For simplicity, it is assumed in the following discussions that the rotor **816** rotates counterclockwise, although it is to be understood that the discussions apply equally well to a peristaltic pump with clockwise rotating rotor. The compressible tube **807** of the housing **809** may be divided into several sections:

1. an open section between point **801** and point **806** where the compressible tube **807** experiences no compression;
2. a pump inlet section between point **801** and point **802** where the compressible tube **807** is progressively compressed until fully closed when a roller rolls over the section;
3. two pumping sections between point **802** and point **803**, as well as between point **804** and point **805** wherein the compressible tube **807** is fully closed by the roller;
4. a recess section between point **803** and point **804** in which the compressible tube **807** progressively expands from fully closed to fully open as a roller rolls through the expansion part of the recess section from point **803** to point **813**;
5. then the compressible tube **807** is progressively compressed to fully closed as a roller rolls through a compression part of the recess section from point **813** to point **804**; and
6. the exit section between point **805** and point **806** where the compressible tube **807** progressively expands from fully closed to fully open as a roller rolls through the section.

In other words, when a roller rolls anticlockwise over the compressible tube **807** from inlet point **801** to outlet point **806**, the inner gap of the compressible tube **807** may:

1. progressively decrease from fully open at point **801**, to fully closed at point **802** and remain closed until point **803**;
2. then progressively expand back to fully open at point **813**;
3. then progressively decrease to fully closed at point **804**, and remain closed until the roller reaches point **805**; and
4. finally progressively expand back to fully open at point **806**.

The size of the gap inside the compressible tube **807** is schematically illustrated in FIGS. **18**A through **18**D as the spacing between dashed circle and the solid compressible tube **807**. As illustrated in FIGS. **18**A through **18**D, in this embodiment of the peristaltic pump **80**, the angular distances, separations or spacings between points **801** and **803**, points **802** and **813**, point **813** and **805**, as well as between point **804** and **806** may be identical to the angle between adjacent rollers. As a result, when the roller **810** rolls through the pumping section from point **804** to point **805**, as depicted in FIGS. **18**A through **18**B, its interaction with the compressible tube **807** may completely determine the fluid flow rate of the peristaltic pump **80**. Once the roller **810** reaches the exit section between point **805** and **806**, as shown in FIG. **18**C, the compressible tube **807** underneath the roller **810** may start to progressively expand and a gap may start to grow. Meanwhile, the roller **811** may arrive at the compression part of the recess section and start to progressively compress the compressible tube **807**. In the peristaltic pump **80**, the shape of the compression part of the recess section between point **813** and point **804** along the compressible tube **807** is such that the volume of liquid pushed out by the compression of the underneath roller **811** in the compression part of the recess section between point **813** and point **804** may substantially fill the volume created by the compressible tube **807** expansion underneath roller **810** in the exit section between point **805** and point **806**. During this period, the compressible tube **807** is partially open underneath both rollers **810** and **811** and completely closed underneath roller **812**. Consequently, the pumping action may be mainly delivered by roller **812**. In particular, since by design the total volume of liquid in the section of

the compressible tube **807** between point **813** and point **816** remains substantially constant during this period, the flow rate of the peristaltic pump **80** in the state shown in FIG. **18**C may remain substantially the same as that in the state shown in FIGS. **18**A and **18**B. Once the roller **810** passes point **806**, roller **811** reaches the pumping section between point **804** and point **805**. Note there is no physical difference between the rollers **810**, **811** and **812**, the flow rate of the peristaltic pump **80** may therefore remain substantially constant throughout the entire process.

The mechanism of the pulseless peristaltic pump in accordance with some embodiments of the present disclosure may be understood more clearly if it is viewed along a circular coordinate following the movement of the rollers. Referring to FIG. **19**, denote as V the volume of the fluid inside a compressible tube **819** from the outlet to a nearest roller **820** that closes off the compressible tube **819**, i.e., the amount of fluid represented by the hatched area **818** shown in FIG. **19**. Clearly, V depends on the angular position, θ, of the roller **820**, as well as δ, the amount of tube compression exerted by all other downstream rollers.

$$V = V(\theta, \delta_1, \delta_2, \ldots) \tag{2}$$

Consequently, the flow rate, F, of a peristaltic pump is related to the time derivative of Vc by:

$$-F = \frac{dv}{dt} = \frac{\partial v}{\partial \theta} R + \Sigma_i \frac{\partial v}{\partial \delta_i} \frac{d\delta_i}{dt} \tag{3}$$

Here R is the rotational speed of the rotor and the subscripts are used to identify multiple downstream rollers. The first term on the right hand side of Eqn. (3) represents the contribution from the roller that closes off the tube. The partial derivative

$$\frac{\partial v}{\partial \theta}$$

is therefore independent of θ. The summation term represents contributions from all other downstream rollers partially compressing the compressible tube **819**. Now let ΔS be the cross sectional area change due to the compression of the compressible tube **819** by the roller **817**, and L be the length of tube where its cross sectional shape is affected by the tube compression. Then, it is obvious to a person skilled in the art that L is proportional to the tube compression δ, and ΔS proportional to its square, $\delta^2$. Consequently, ΔV, the volume of fluid lost due to the compression of the compressible tube **807** by the roller, follows Eqn. (4):

$$V \alpha L \cdot \Delta S \alpha \delta^3 = (D - G)^3 \tag{4}$$

where D is the inner diameter of the compressible tube and G is the minimum gap indicated in FIGS. **19**, **19**A and **19**B which is also represented in FIGS. **18**A through **18**D by the spacing between the dashed circle and the solid track **808** of the housing **809**. FIGS. **19**A and **19**B are detailed cross-sectional views orthogonal to the peristaltic pump's tube's length taken along the lines **19**A and **19**B in FIG. **19** illustrating the tube's partial compression by the roller. FIG. **19**A shows the cross-sectional area **818***a* taken along the line **19**A in FIG. **19**. FIG. **19**B shows the cross-sectional area **818***b* taken along the line **19**B in FIG. **19**. Now referring to FIGS. **20**A and **20**B, in the circular coordinate system, FIG. **20**A corresponds to the state of pump shown in FIGS. **18**A and **18**B. During this period, there is no roller downstream of the roller **810'** and the summation term in Eqn. (3) vanishes. FIG. **20**B corresponds to the state of the pump shown in FIG. **18**C. The compressible tube **807** is closed off by roller **812'** and partially compressed by the rollers **810'** and **811'**. However, volumetric changes introduced by the two rollers **810'** and **811'** substantially cancel each other. Consequently, the summation term is Eqn. (3) vanishes as well. As a result, the flow rate of the peristaltic pump **80** may remain substantially constant regardless of roller positions.

The shape of the compressible tube **807** satisfying the above requirement can be readily derived from Eqn. (4). Referring to FIG. **18**C, if the gaps of the arcuate curved track **808** in the compression part of the recess section between point **813** and point **804**, $G_{13,4}$, and in the exit section between point **805** and point **806**, $G_{5,6}$, follow the equation:

$$(D - G_{13,4})^3 + (D - G_{5,6})^3 = D^3 \tag{5}$$

then the total fluid volume in the two sections may remain substantially constant, as shown in FIG. **21**. In the peristaltic pump **80**, the shape of the pump housing **809** may be symmetrical with respect to its center line, such that the entrance half of the pump housing **809** is the mirror image of the exit half of the housing **809**, as shown in FIG. **17**. The peristaltic pump **80** can therefore be operated both in counterclockwise and clockwise rotation with very little pulsation, although it is understood that the symmetry is not required to realize a pulseless peristaltic pump in accordance with some embodiments of the present disclosure. For example, as long as the gaps of the arcuate curved track **808** in the section between point **813** and point **803**, $G_{13,3}$, and in the section between point **802** and point **801**, $G_{2,1}$, follow Eqn. (6)

$$(D - G_{13,3})^2 + (D - G_{2,1})^3 = D^3 \tag{6}$$

a peristaltic pump in accordance with some embodiments of the present disclosure will exhibit little pulsation when the rotor **816** rotates clockwise.

FIG. **22** depicts an alternative embodiment of a peristaltic pump in accordance with some embodiments of the present disclosure. Those elements depicted in FIG. **22** that are common to the peristaltic pump **80** illustrated in FIG. **17** carry the same reference numeral distinguished by a prime (') designation. The peristaltic pump **80'** may include an arcuate curved track **808'** having two (2) recesses **818** and **819**, and four (4) rollers **820**, **821**, **822** and **823**. In the embodiment depicted in FIG. **22**, the fluid volume loss due to the tube expansion near the outlet of the pump is compensated by the combined effect of the compression of the compressible tube by rollers **820** and **823** near the two recesses **818** and **819**.

FIG. **23** depicts yet another alternative embodiment of a peristaltic pump in accordance with the present disclosure. Those elements depicted in FIG. **23** that are common to the peristaltic pump **80** illustrated in FIG. **17** and the peristaltic

pump **80'** illustrated in FIG. **22** carry the same reference numeral distinguished by a double prime (") designation. The peristaltic pump **80"** may include six (6) rollers **820**, **821**, **822**, **823**, **824**, **825** and an arcuate curved track **808"** having two recesses **818"** and **819"**. In the peristaltic pump **80"**, the fluid volume loss due to the tube expansion near the outlet of the pump is compensated by the action of the roller immediately upstream of the one recess **818"** or **819"** near the pump outlet.

Pulsation due to the expansion of a compressed compressible tube near the outlet of a peristaltic pump may also be overcome by a peristaltic pump having a programmable rotor speed. FIGS. **24**A through **24**C illustrate pertinent aspects of an alternative embodiment mechanism for minimizing peristaltic pump pulsation in accordance with the present disclosure for a 3-roller peristaltic pump. As depicted in FIG. **24**B, the track **828** is substantially circular between the pump inlet and pump exit section. Consequently, as indicated by the spacing between the dashed circle **829** and the solid curve of the track **828**, the compressible tube is completely closed by various ones of the pump's three (3) rollers **825**, **826**, **827** between the pump inlet and pump outlet. FIG. **24**A illustrates schematically in a circular coordinate system the roller positions for the peristaltic pump depicted in FIG. **24**B. Since there is only one roller downstream of the one that closes off the tube, Eqn. (3) is much simplified:

$$-F = R\left(\frac{\partial V_c}{\partial \theta} + \frac{\partial V_c}{\partial \delta}\frac{d\delta}{d\theta}\right) \tag{7}$$

Here the tube compression $\delta(\theta)$ is explicitly expressed as a function of roller position $\theta$. The terms inside the parentheses represent the change rate of fluid volume with respect to roller position. The first term is the contribution from the roller that closes off the tube, i.e., roller **827** in FIG. **24**A, and the second term the contribution from the roller in the exit section. Note that by definition, the volume change rate is negative and the second term inside the parentheses vanishes when there is no roller in the exit section. The dotted curve in FIG. **24**C is a representative plot of the negative volume change rate with respect to the position of the roller. The bump along the curve, due to the tube expansion when a roller rolls off the tube near the pump outlet, is the cause for pulsation in conventional peristaltic pumps having a constant rotor speed. However, for the peristaltic pump depicted in FIGS. **24**A through **24**C, the rotor speed, R, shown as dashed curve in FIG. **24**C, may be set to vary in synchronism with the rotor position and inversely proportional to the change rate of the fluid volume. Consequently, the flow rate of the pump, which is the product of the rotor speed and the change rate of the fluid volume, may remain constant, as indicated by the solid line at the top of FIG. **24**C. Note the terms inside the parentheses of Eqn. (7) may be uniquely determined by the mechanical structure of the pump. The rotor speed profile can therefore be readily generated from the shape of the track **828** in accordance with Eqn. (4). To those skilled in the art, there are many ways to realize a programmable rotor, for example, with stepping motor or DC servo motor.

WDM Device **90**

In many multicolor fluorescence detection instrumentations, such as flow cytometers, (Practical Flow Cytometry, Howard M. Shapiro, Wiley (2003) ISBN 0471411256), the fluorescence light emitted from the object of interest is:

1. collected by a microscope objective;
2. reimaged through a small pinhole or a multimode optical fiber;
3. then collimated and separated into multiple colored bands; and
4. finally detected by photo detector, such as photomultiplier tube (PMT), PIN photodiode or avalanche photodiode (APD).

A PMT is essentially a special type of electron tube. This "pre-semiconductor age" device is bulky and expensive. In addition, it has poorer quantum efficiency and less reproducible spectral response than silicon based semiconductor detectors, particularly in the biologically important red to near infrared spectral region. Despite the disadvantages, PMT has excellent noise characteristics. For example, the dark current of a typical 13 mm PMT (e.g., the R9305 from Hamamatsu Corporation of Japan) is only about 1 nA. In contrast, an APD's dark current would be 10 times greater even if its active area were reduced to 1/20th of that of the PMT. As a result, PMT has been the de-facto low-level light detector in many commercial fluorescence detection flow cytometers. Only in certain scientific applications where event rate is low and dark current may be discriminated against by expensive photon-counting techniques that the PMT has been replaced by APD detectors. (c.f., High-Throughput Flow Cytometric DNA Fragment Sizing, A. V. Orden, R. A. Keller, and W. P. Ambrose, *Anal. Chem.*, 2000, 72 (1), p 37-41). More recently, a Geiger mode APD array was also promoted as PMT replacement. (For example, the multi pixel photon counter of Hamamatsu Photonics of Japan and the solid-state photomultiplier of SensL Inc. of Ireland.) These detectors, however, also have high dark current and are nonlinear at high event rate.

The only industry where APD has found wide acceptance is in optical communication. It is known that if the APD's active area is reduced to less than 1 $mm^2$, the corresponding dark current will be reduced to the same level as a PMT. In optical communication, the light is a laser beam out of single mode optical fiber. Such a beam can be easily collimated then focused down to an area much smaller than 1 $mm^2$. It should be noted that the color separation devices used in the fluorescence light detection instruments, as described in U.S. Pat. No. 6,683,314 and references therein, are almost identical in function and architecture to the wavelength division multiplexers (WDM) widely used in optical communication, as described in U.S. Pat. Nos. 4,482,994, and 5,786,915. A fundamental reasons preventing the use of small area APD in fluorescence detection instrumentation is the well-known theorem of etendue conservation: the fluorescence light coming through a pinhole or multimode optical fiber is an extended light source with an etendue hundreds of times greater than that of a laser beam out of a single mode optical fiber. Consequently, as illustrated in FIG. **26**, it cannot be collimated over an extended distance unless the diameter of the beam is significantly expanded. Unfortunately, the larger the beam diameter, the greater the technical challenge to focus it down to a small spot. Since efficient color separation can only be accomplished economically with collimated light beam, small area APD has not been considered viable for multicolor fluorescence light detection applications. Clearly, a technology capable of collimating a large etendue light beam over an extended distance without significantly expanding the beam diameter would be highly desirable. Such a technology would enable a WDM like device for fluorescence light detection with characteristics comparable to low noise semiconductor detectors.

FIG. **25** shows the optical ray trace for an exemplary 6 port wavelength division multiplexer of the present disclosure using zig-zag configuration. As shown in FIG. **25**, fluorescence light going through a pinhole or emitted from the facet of a multimode optical fiber, such as the optical fiber **852** depicted in FIG. **1**, forms an extended object or light source at location **901**, i.e. the optical input of the WDM **90**. The size of the object is defined by the diameter of the pinhole or the core diameter of the multimode optical fiber. Note that the practical size of the pinhole or the core diameter of the multimode optical fiber is measured in millimeters, in contrast to the diameter of single mode optical fibers that are measured in micrometers. Consequently, the etendue of the fluorescence light source, defined as the product of beam size and its divergence angle, is hundreds times greater than its counterpart in optical communication. According to the theorem of the conservation of etendue (Julio Chaves, *Introduction to Nonimaging Optics*, CRC Press, 2008 [ISBN 978-1420054293]), light from such an extended source, similar to that from a flash light, can only be kept collimated for a very limited distance, particularly when the diameter of the collimated portion needs to be small.

As depicted in FIG. **25**, a collimating optical element, in this case an achromatic doublet lens **902**, may capture the light from source **901**, and project a magnified image of the object near a final focusing lens **905**. The size of the image near **905** may be kept approximately the same as the effective size of the collimating optical element **902**. Consequently, beam of light propagating between the collimating optical element **902** and the focusing lens **905** may be effectively collimated. As shown in FIG. **25**, so long as the magnification factor is kept small, for example, less than around 10, using a simple singlet lens as the focusing lens **905**, the collimated beam of light can readily focused down to a spot smaller than that of the beam of light received by the WDM **90** at location **901**. The ability to focus the beam of light down to such a small size permits placing a small area semiconductor detector at a focal point **906** of the focusing lens **905** for efficient photo detection.

A dichroic filter **903**, oriented at a slanted angle, may be inserted into the optical path in between the collimating optical element **902** and the focusing lens **905**. The dichroic filter **903** may pass the color band of interest and reflects the remaining colors in the beam of light for further processing within the WDM **90**. An optional band pass filter **904** may be inserted following the dichroic filter **903** to further improve the color isolation capability of the WDM **90**.

Light reflected from the dichroic filter **903** may impinge upon a second optical element **907**, such as a concave mirror. The concave mirror **907** may a radius of curvature approximately equal to the distance between the collimating optical element **902** and the image near focusing lens **905**. The concave mirror **907** therefore creates a second image of the collimating lens **902** near a second focusing lens **908**. The light beam between the concave mirror **907** and the second image at the lens **908** may have substantially the same diameter as the beam of light between the collimating lens **902** and the first image near the focusing lens **905**. The relay imaging concave mirror **907** therefore effectively doubles the collimated beam path without expanding the beam's diameter. Again, the extended yet collimated beam can be easily focused down to a spot smaller than that of the light source at **901**. The diameter of the spot may be smaller than 1 mm, for example, around 600 μm, A second dichroic filter **909** may then be inserted in between the relay imaging concave mirror **907** and the second image near focusing lens **908**. The second dichroic filter **909** may pass another band of color in the beam of light received by the WDM **90** at location **901** and reflect the remainder of the impinging beam of light for further processing. The first and second dichroic filters **903** and **909** may be inserted approximately midway between the collimating optical element **902** and the focusing lens **905** and between the relay imaging concave mirror **907** and the second image near focusing lens **908**, respectively.

As shown in FIG. **25**, additional relay collimating optical elements **910**, **911**, **912**, **913** and dichroic filters **914**, **915**, **916**, **917** can be cascaded in the same way to produce multiple images near focusing lenses **918**, **919**, **920** and **921**, each of these images corresponding to a specific color band of light received by the WDM **90** at location **901**. As shown in FIG. **25**, due to the present disclosure's 1:1 imaging relay architecture, the spots of light produced by focusing lenses **905**, **908**, **918**, **919**, **920** and **921** are all smaller than the source of the beam of light, and therefore can be easily captured by small area APD's.

Although FIG. **25** illustrates a 6-port wavelength division multiplexer for a beam of light from the extended light source, it is readily apparent to those skilled in the art that WDM's having different numbers of ports can be easily built in accordance with some embodiments of the present disclosure. It is also apparent to those skilled in the art that although the WDM **90** may use achromatic doublets as the first collimating optical element, singlet lens can also be used since the images created before the focusing lenses **905**, **908**, **918**, **919**, **920** and **921** are all nearly monochromatic. Instead of using concave mirrors for relaying the beam of light reflected from the dichroic filters, one may also use refractive optics, such as a convex lens, as a relay element to extend the path of the collimated beam of light. One of the advantages of the zig-zag architecture used in the WDM **90**, however, is the possibility for using array detectors, which would lead to a more compact WDM suitable for portable instrumentation.

FIG. **25**A illustrates a top view of a light detection assembly **937** with the WDM **90** illustrated in FIG. **25** in accordance with some embodiments of the present disclosure. The light detection assembly **937** may include the WDM **90** and a photodetector system **938**. A beam of light which emits from the facet of the optical fiber **852** may be processed by the WDM **90** and detected by the photodetector system **938**. The concave mirrors **907**, **910**, **911**, **912**, and **913** and the dichroic filters **903**, **909**, **914**, **915**, **916**, and **917** may be formed on two sides of a reference block **935**. The reference block **935** may be made of glass or any material which allows light to pass through it. Accordingly, a zig-zag optical pattern, as illustrated in FIG. **25** may be formed among the collimating optical element **902**, the dichroic filters **903**, **909**, **914**, **915**, **916**, and **917**, the reference block **935**, the concave mirrors **907**, **910**, **911**, **912**, and **913**, and the focusing lens **905**, **908**, **918**, **919**, **920**, and **921**. After being processed by the WDM **90**, the beam of light emitting from the facet of the optical fiber **852** may split into multiple colored bands with different wavelengths to be detected by photodetectors **940**, **941**, **942**, **943**, **944**, and **945**, respectively. The photodetector can be, but is not limited to, a semiconductor detector, an avalanche photodetector (APD), and a carbon nanotube detector.

In some embodiments, the concave mirrors **907**, **910**, **911**, **912**, and **913** may be structurally formed on a relaying assembly **939**. It should be understood by those having skill

in the art that the concave mirror can be replaced with a convex lens, which is also able to converge and relay the beam of light.

In some embodiments, the dichroic filter can be replaced with a mirror to prevent the beam of light from entering a photodetector when a user wants to decrease the number of light signal channels to be detected. It should be understood by those having skill in the art that the dichroic filter can also be replaced by a dichroic mirror, a beam splitter, or any optical element which is able to split or filter a beam of light.

FIG. **25**B illustrates a front view of the light detection assembly **937** with the WDM **90** illustrated in FIGS. **25** and **25**A in accordance with some embodiments of the present disclosure. The light detection assembly **937** may have a top cover **940** which is openable. Therefore, the user can open the top cover **940** to change the dichroic mirrors **903**, **909**, **914**, **915**, **916**, and **917** and modify the light detection system **938** or the WDM **90** inside.

FIG. **26** illustrates an optical ray trace for a prior art collimating device. The technique depicted in FIG. **26** is extensively used in conventional multicolor fluorescence instruments, for example, in U.S. Pat. No. 6,683,314. As shown in FIG. **26**, the beam of light diverges rapidly beyond the image **924** created by the collimating optical element **923**. Consequently, the only option for constructing a multicolor device is to insert dichroic filters in between the collimating element **923** and its image **924**.

Due to the constraint of etendue conservation, the diameter of the collimated beam must be significantly expanded to accept multiple dichroic filters in the section. The expanded beam creates serious challenge to refocusing the collimated beam down to small spots suitable for small area semiconductor detectors. To overcome these difficulties, some instrument manufacturers have chosen to use PMT exclusively for fluorescence detection such as in the main stream flow cytometers manufactured by Becton-Dickinson, Beckman Coulter and Partec's and the MegaBACE series of DNA sequencers by GE Amersham. Other instruments, such as the Luminex multiplexed bead analyzers, have selected certain color bands with known bright fluorescence, and uses large area APD for detecting light in the selected color bands.

FIG. **27** illustrates a perspective view of an alternative embodiment for a 6-port WDM **90** using a combination of zig-zag and branched configurations. The design is a modification of zig-zag configuration depicted in FIG. **25**. In the alternative embodiment depicted in FIG. **27**, band pass filter **904** of FIG. **25** may be replaced by a dichroic filter **904'**. The filter **904'** is positioned to let one color pass through and reflects other colors at ninety degrees (90°). The optical path length of the beam of light passing through the dichroic filter **904'** and that being reflected from the **904'** are substantially the same, such that one arm is focused by lenses **905** and the other by lens **905'** to small spots compatible with small area semiconductor detectors placed at focal location **906** and **906'**. As shown in FIG. **25**, the remaining color of the light reflected by dichroic filter **903** is relay imaged by a concave mirror **907** and the configuration including optical elements **903**, **904'**, **905** and **905'** is cascaded two (2) more times to form a 6 port-WDM.

FIG. **28** illustrates a perspective view of an alternative embodiment for a 8-port WDM **90**. By replacing the concave mirrors **907** and **910** in FIG. **27** with concave shaped dichroic filters **907'** and **910'**, the WDM depicted in FIG. **28** may provide 2 more color bands in comparison with the WDMs depicted in FIGS. **25** and **27**.

Numerous fluorescence probes for use in flow cytometry have been developed over the years. More recently, multiple fluorescence proteins have also become an important tool in biomedical studies. To accommodate different types of fluorescence probe, various techniques have been developed to enable user selection of dichroic filters suitable for their particular needs. A significant challenge for replaceable dichroic filters is avoiding direct contact of the coated filter surface with any hard flow cytometer reference frame. Repeated direct contact between the coated filter surface and any hard reference frame may damage a replaceable dichroic filter. Presently, most conventional solutions addressing this problem use precision-machined mechanical spacers for holding replaceable dichroic filters in place. One example of such a solution appears in U.S. Pat. No. 6,683,314. However, such a solution becomes unreliable if the detector's active area is smaller than 1.0 $mm^2$.

FIGS. **29**A and **29**B depict fabricating a replaceable dichroic filter assembly **934** illustrated in FIG. **29**C suitable for small area detectors. Assembly of the replaceable dichroic filter assembly **934** begins in FIG. **29**A which depicts constructing a reference template for its fabrication. The reference template may be a staircase made of two (2) optically parallel glass plates **925** and **926**. Bonding the two (2) glass plates **925** and **926** together in optical contact can ensure that a surface **929** of the glass plate **925** becomes optically parallel to a surface **930** of the glass plate **926**. A front surface **932** of a replaceable dichroic filter **927** may then be pressed against the surface **929** of the template. A filter holder **928**, which loosely fits the dichroic filter **927**, may include a reference surface **931** and a filter slot **933**. During assembly of the replaceable dichroic filter, the filter slot **933** may be partially filled with epoxy adhesive and the reference surface **931** of the filter holder **928** may be pressed against the surface **930** of the template while filter holder **928** slides toward the dichroic filter **927**. While the epoxy adhesive sets, part of the dichroic filter **927** remains seated within the filter slot **933** while pressure is applied against the dichroic filter **927** and filter holder **928**. It should be apparent to those skilled in the art that the epoxy adhesive may be either UV or thermally curable, or made by blending together components of an A/B mixture. FIG. **29**C depicts a dichroic filter fabricated as depicted in FIGS. **29**A and **29**B and described above. The assembly process depicted in FIGS. **29**A and **29**B and described above can ensure that the front surface **932** of the replaceable dichroic filter assembly **934** can be optically parallel to the reference surface **931**, and indented with respect to the latter at a spacing accurately determined by the thickness of the glass plate **925**. The dichroic filter **927** depicted in FIGS. **29**A, **29**B, and **29**C may be the dichroic filters **903**, **909**, **914**, **915**, **916**, or **917** used with the WDM illustrated in FIG. **25** or the dichroic filter **903** or the filter **904'** used with the WDM illustrated in FIG. **27**.

FIGS. **30**A and **30**B depict an embodiment of the present disclosure where the fore-mentioned replaceable dichroic filter assembly **934** is used in the WDM **90** for optically processing a beam of light from an extended light source. A notable feature of the WDM **90** is a glass reference block **935** having an optically flat surface. As will be apparent to those skilled in the art, the glass reference block **935** may be made of other materials. As shown in FIG. **30**B, when installing a dichroic filter **927** the reference surface **931** of the replaceable dichroic filter assembly **934** may slide against the flat surface of the glass reference block **935** and be kept in contact therewith by a spring loaded screw **936**. Consequently, the coated front surface **932** of the replace-

able dichroic filter assembly **934** can remain optically parallel to the optical flat and accurately located. In the meantime, the indentation of front surface **932** with respect to the reference surface **931** may protect it from in physical contact with any object during filter replacement. It is apparent to those skilled in the art that many modifications and variations of the described embodiments of the replaceable dichroic filter assembly **934** are possible. For example, an alternative embodiment of the present disclosure may be a pedestal assembled using a first and a second round optical flat. When assembling the replaceable dichroic filter assembly **934**, the reference surface of a filter holder may rest against a surface of the first optical flat and the coated surface of the dichroic filter may rest against the flat surface of the second optical flat. Epoxy bonding then may hold the coated surface of the dichroic filter optically parallel to the reference surface of a filter holder, yet indented at a distance accurately determined by the thickness of the second optical flat.

Optical System with Single Light Source **41**

FIG. **31** is a diagram schematically illustrating an optical system with a single light source **41** in accordance with some embodiments of the present disclosure. The optical system with a single light source **41** may include a LD based optical subsystem **50**, a composite microscope objective **60**, a WDM **90**, and a light detection system **938**. The beam of light may propagate substantially along the z axis and enter the composite microscope objective **60** from the LD based optical subsystem **50** to illuminate particles present within the viewing zone inside the composite microscope objective **60**. The light scattered from and fluoresced by particles may then be reflected by the concave mirror **601**, corrected by the corrector plate **602**, and collected by the optical fiber **852** substantially along the x axis. The optical fiber **852** may be fixed by a fiber holder **940**.

Common wavelengths of light sources may include, but not limited to, 375 nm, 405 nm, 440 nm, 488 nm, 502 nm, 534 nm, 561 nm, 591 nm, 637 nm, and 637 nm. The light detection system **938** may be coupled with circuits for processing light signals. The more ports the WDM **90** has, the more light signal channels the user can use.

Optical System with Multiple Light Sources **42**

FIG. **32** is a diagram schematically illustrating an optical system with multiple light sources **42** in accordance with some embodiments of the present disclosure. The optical system with multiple light sources **42** may include multiple LD based optical subsystems **50**, multiple WDMs **90**, multiple light detection systems **938**, and a composite microscope objective **60** with a viewing zone. The number of WDMs **90** may correspond to the number of LD based optical subsystems **50**. In FIG. **32**, the optical system with multiple light sources **42** includes three laser diodes **501** for emitting multiple beams of light with different wavelengths, three collimating lenses **502** in front of the three LDs for collimating the beams of light respectively, three dichroic filters **506**, **507**, and **508** for passing beams of light with certain wavelength range or reflecting beams of light with certain wavelength range, a plano-convex lens **504** for shaping the beams of light on the major axis, a cylindrical lens **505** for focusing the beams of light onto three spatially separated locations in the flow channel **604**, a composite microscope objective **60** for directing the light scattered from and fluoresced by the illuminated particles at three spatially separated locations to be collected by three optical fibers **852**, respectively, three optical fibers **852** for collecting scatter and fluorescence emissions and transmitting the emissions to three WDMs **90**, respectively, and three WDMs **90** and light detection systems **938** for processing and detecting the scatter and fluorescence light, respectively. The direction of beams of light entering the composite microscope objective **60** may be perpendicular to the direction of scatter and fluoresce emissions to be collected by the optical fiber **852**. It should be noted that the plano-convex lens **504** and the cylindrical lens **505** can be replaced with any conventional beam shaper and any focusing lens. It should also be noted that the various aspects of the present disclosure are not limited to specific numbers of laser diodes, collimating lenses, dichroic filters, plano-convex lenses, composite microscope objectives, optical fibers, WDMs, and light detection systems and specific wavelength and direction of each beam of light.

FIG. **33** illustrates an enlarged view of beams of light **509** and **510** shown in FIG. **32**. The beams of light **509** and **510** are emitted from different laser diodes **501** with different wavelengths and then are focused onto spatially divided locations in the flow channel **604** inside the composite microscope objective **60**.

Optical System with Chromatic Compensation Elements **51**

FIG. **34** is a diagram schematically illustrating an optical system with chromatic compensation elements **51** in accordance with one aspect of the present disclosure in accordance with some embodiments of the present disclosure. The optical system with chromatic compensation elements **51** may include the optical system with multiple light sources **42**, as shown in FIG. **32**, and multiple chromatic compensation elements **514**, **515**, and **516**. Each of the chromatic compensation elements **514**, **515**, and **516** may be positioned on the beam paths of beams of light emitting from light sources **511**, **512**, and **513**, respectively, and compensate chromatic aberration in the viewing zone. As such, the beams of light emitting from the light sources **511**, **512**, and **513** with different wavelengths may be focused onto three spatially divided locations on a common plane which is in the viewing zone and substantially parallel to the direction of a sample flow. The optical properties of chromatic compensation elements **514**, **515**, and **516** may be different from each other. For example, their thicknesses and shapes may be different to accommodate various beams of light with different wavelengths.

In some embodiments, the optical system shown in FIG. **34** may only need one or two chromatic compensation elements to compensate chromatic aberration in the viewing zone. It should be noted that the various aspects of the present disclosure are not limited to specific numbers or optical properties of chromatic compensation elements.

Power Monitoring System **43**

FIG. **35** is a diagram schematically illustrating a power monitoring system **43** in accordance with some embodiments of the present disclosure. The power monitoring system **43** may include a first light source **513** for emitting a first beam of light, a second light source **512** for emitting a second beam of light, a first dichroic filter **519** for reflecting the first beam of light and passing the second beam of light, a second dichroic filter **518** for reflecting the second beam of light, a first detector **401** for measuring residual power of the first and second beams of light downstream of the first dichroic filter **519** on a time-division multiplexing basis, and a control unit **522** coupled with the first detector **401**, the first light source **513**, and the second light source **512**. The first detector **401** may be positioned near or coupled to the first dichroic filter **519**. The first and second light sources **513** and **512** may emit beams of light with different wavelengths.

In order to reduce interference between the residual power of the first and second beams of light, the first detector **401** may measure the residual power of the first beam of light when the second light source **512** is off or measure the residual power of the second beam of light when the first light source **513** is off. The residual power of the first and second beams of light may include power of the first beam of light passing through the first dichroic filter **519** and power of the second beam of light reflected by the first dichroic filter **519**.

In some embodiments, the control unit **522** may include a feedback circuit to increase the power of the light source when residual power of the light source drops below a certain level or to lower the power of the light source when the residual power of the light source increases above a certain level.

In some embodiments, a second detector **400** may be applied with the power monitoring system **43** and positioned near or coupled to the second dichroic filter **518** to measure the residual power of the second beam of light downstream of the second dichroic filter **518**. The residual power of the second beam of light downstream of the second dichroic filter **518** may include power of the second beam of light passing through the second dichroic filter **518**. The second detector **400** may also be coupled to the control circuit **522**. When the second detector **400** is applied to the power monitoring system **43**, the first detector **401** may only need to monitor the residual power of the first beam of light.

In some embodiments, a third light source **511** for emitting a third beam of light and a third dichroic filter **517** for reflecting the third light may be also applied with the power monitoring system **43**. The third light source **511** may be also coupled to the control circuit **522**. As such, the first detector **401** may measure residual power of the first, second, and third beams of light downstream of the first dichroic filter **519** on a time-division multiplexing basis.

In some embodiments, the second detector **400** may measure residual power of the second and third beams of light downstream of the second dichroic filter **518** on a time-division multiplexing basis. The residual power of the second and third beams of light downstream of the second dichroic filter **518** may include power of the second beam of light passing through the second dichroic filter **518** and power of the third beam of light reflected by the second dichroic filter **518**.

In some embodiments, a third detector (not shown in FIG. **35**) may also be applied with the power monitoring system **43** and positioned near or coupled to the third dichroic filter **517** to measure residual power of the third beam of light downstream of the third dichroic filter **517**. The third detector may be also coupled to the control circuit **522**. The residual power of the third beam of light at the downstream of the third dichroic filter **517** may include power of the third beam of light passing through the third dichroic filter **517**.

The second beam of light can either be detected by the first detector **401** or the second detector **400**. The third beam of light can be detected by the first detector **401**, the second detector **400**, or the third detector which is positioned near or coupled to the third dichroic filter **517**. The control circuit **522** may control the operation of the detectors and light sources.

It should be understood by those having skill in the art that the dichroic filter can also be replaced by a dichroic mirror or a beam splitter. It should also be noted that the various aspects of the present disclosure are not limited to specific numbers of light sources, dichroic filters, and detectors.

Optical System **44**

FIG. **36** is a diagram schematically illustrating an optical system **44** in accordance with some embodiments of the present disclosure. The optical system **44** may include a composite microscope objective **60**, as shown in FIG. **8**, a light source **403**, and a beam splitter **402**. The light source **403** may emit beams of light to illuminate objects in a viewing zone, which is located in a flow channel **604** inside a cuvette **603**. The composite microscope objective **60** may image light scattered from and fluoresced by the objects in the viewing zone at an image plane **404** external to the composite microscope objective **60**. The light source **403** and the image plane **404** may be located on two sides of the beam splitter **402**.

The composite microscope objective **60** may include a concave mirror **601** and an aberration corrector plate **602** coupled to the two sides of the cuvette **603**. The aberration corrector plate **602** may be an aspheric lens that has a first zone with negative optical power and a second zone with positive optical power radially inside the first zone. A neutral zone may be the thinnest portion of the aberration corrector plate **602** and located between the first zone and the second zone. The aspheric lens may be a plano-aspherical lens. The concave mirror may be a plano-concave back surface mirror or a front surface mirror. The concave mirror **604** and the aberration corrector plate **602** may be made of an optically transparent material.

In FIG. **36**, the beam of light emitting from the light source **403** may be reflected by the beam splitter **402** and enter into the composite microscope objective **60** to illuminate objects in the viewing zone. The light scattered from and fluoresced by objects may be reflected by the concave mirror **604**, transmit through the aberration corrector plate **602** and the beam splitter **402**, and form an image at the image plane **404** external to the composite microscope objective **60**. The light source **403** may include multiple laser diodes **403***a*, **403***b*, and **403***c* emitting multiple beams of light with different wavelengths to illuminate objects at multiple locations in the flow channel **604**. Accordingly, multiple images **404***a*, **404***b*, **404***c* may be formed at the image plane **404**.

In some embodiments, the locations of the light source **403** and the image plane **404** may be swapped. Accordingly, the beam of light emitting from the light source **403** may transmit through the beam splitter **402** and enter into the composite microscope objective **60** to illuminate objects in the viewing zone. The light scattered from and fluoresced by objects may be reflected by the concave mirror **604**, transmit through the aberration corrector plate **602**, be reflected by the beam splitter **402**, and form an image at the image plane **404** external to the composite microscope objective **60**.

In some embodiments, the viewing zone may be located in a jet stream or a surface of a substrate containing objects (not shown in FIG. **36**). The objects may be delivered into the viewing zone by a fluidic system, such as a fluidic system shown in FIG. **14** or **15**.

In some embodiments, the scattered and fluoresced light imaged at the image plane **404** may be received by a fiber (not shown in FIG. **36**) which transmits the light to a photodetector. The scattered and fluoresced light may be processed by a wavelength division multiplexer (WDM) (not shown in FIG. **36**) before being detected by the photodetector. The WDM may be configured as a WDM illustrated in FIGS. **25**, **25**A, and **25**B. The photodetector can be, but not limited to, a semiconductor photodetector, a multi-pixel photon counter, and a carbon nanotube detector.

In some embodiments, the light source **403** may emit coherent light or incoherent light. The light source **403** can be single or multiple laser diodes, light emitting diodes, illumination devices emitting beam of light, or any combination of them.

In some embodiments, a chromatic compensating lens (not shown in the figure) may be inserted between the aberration corrector place **602** and the image plane **404** to serve to reduce the residual chromatic aberration.

Axial Light Loss Detection System **45**

FIG. **37** is a diagram schematically illustrating an axial light loss detection system **45** in accordance with some embodiments of the present disclosure. The axial light loss detection system **45** may include a concave mirror **406** for reflecting light that propagates from a viewing zone and a detector **408** for measuring axial light loss produced by the object in the viewing zone by detecting light reflected by the concave mirror **406**. The light reflected by the concave mirror **406** may include forward scattered light (FSC) and remaining light of beam of light entering into the viewing zone from a light source **412** to irradiate the object therein, which is so called axial light loss (ALL). The axial light loss of the beam of light along its propagation direction may result from the object passing through the beam of light. The beam of light may be blocked or absorbed by the object.

The axial light loss detection system **45** may utilize the concave mirror **406** to direct both FSC and remaining light into the detector **408** in order to determine the size of object. The FSC and remaining light may have the same wavelength, and therefore the signals of FSC and remaining light detected by the detector **408** may be proportional to square of the sum of their electric fields as follows:

$$(E_{FSC} + E_{ALL})^2 \tag{8}$$

$E_{FSC}$ represents the electric field of FSC. $E_{ALL}$ represents the electric field of remaining light.

On the contrary, a conventional ALL detection system disclosed in prior art usually requires a pinhole positioned along a laser beam path to block FSC in order to detect remaining light of the laser beam. Accordingly, the signals of remaining light detected by an ALL detector is proportional to square of its electric field as follows:

$$(E_{ALL})^2 \tag{9}$$

Further, a conventional FSC detection system disclosed in prior art usually requires a mask positioned along a laser beam path to block remaining light of the laser beam in order to detect FSC. Accordingly, the light signals of FSC detected by a FSC detector is proportional to square of its electric field as follows:

$$(E_{FSC})^2 \tag{10}$$

Apparently, neither of the conventional ALL detection system nor conventional FSC detection system could operate without using a pinhole or a mask.

In some embodiments, the concave mirror **406** may be an ellipsoidal mirror or a combination of a flat mirror and a lens. The detector **408** may be an axial light loss detector to determine the size of the object.

In some embodiments, the detector **408** may be in a heterodyne mode detecting the coherent interference of FSC and the remaining light. The wavelengths of FSC and remaining light may be the same.

In some embodiments, a light source **412** emitting beam of light may be used to illuminate the object in the viewing zone. The optical axis of the beam of light is substantially perpendicular to the flow direction of the object.

In some embodiments, multiple light sources **412** emitting beams of light with different wavelengths may be used to illuminate the objects in the viewing zone. When multiple light sources **412** are applied to the axial light loss detection system **45**, a filter **407** may be positioned upstream of the detector **408** to separate the light irradiated by the first light source and reflected by the concave mirror **406** and the light irradiated by the second light source and reflected by the concave mirror **406**. As such, the detector **408** may measure them separately, for example, on a time-division multiplexing basis.

In some embodiments, the viewing zone may be located within a microscope objective **410**. The viewing zone may be located in a flow channel **409**, a jet stream, or a substrate. In some embodiments, a cylindrical lens **411** may be coupled to the microscope objective **410** to focus beams of light emitting from the light source **412** to the viewing zone. The optical axis of the cylindrical lens **411** is substantially perpendicular to the optical axis of the light reflected by the concave mirror **406**.

FIG. **38** is a diagram schematically illustrating an axial light loss detection system **45** coupled with a second light detection system **413** in accordance with some embodiments of the present disclosure. The axial light loss detection system **45** may utilize a composite microscope objective **60**, as illustrated in FIG. **8** The composite microscope objective **60** may include a second concave mirror **415** and an aberration corrector plate **414** located on two sides of the viewing zone of the composite microscope objective **60**. The optical axes of the second concave mirror **415** and the aberration corrector plate **414** are substantially parallel to the optical axis of the light reflected by the concave mirror **406**. The FSC and remaining light propagating from the viewing zone may be reflected by the concave mirror **406** and detected by the detector **408** while the side-scattered fluoresced light may be reflected by the second concave mirror **415**, propagate out of the composite microscope objective **60** via the aberration corrector plate **414**, and be detected by the second light detection system **413**.

In some embodiments, one or more control circuits may be coupled with one or more of the detector **408**, the second light detection system **413**, and the light source **412** to process detected light signals. As known by one skilled in the art, the control circuit may include an amplifier to amplify detected light signals, a noise filter to reduce noise interference, and a processor to process detected light signals and generate corresponding information regarding the properties of the object.

Alternative Combined Microscope Objective

FIGS. **11**, **12** and **13** illustrate the build-up of a composite microscope objective **60** adapted for imaging light scattered from and fluoresced by an object present within a viewing zone. The illustrated composite microscope objective comprises a viewing zone, a concave mirror arrangement **601**, **610**, **617**, an exit area and an illumination beam forming arrangement **505**, as illustrated in FIG. **8**A. It should be noted that in FIGS. **11**, **12** and **13** the beam forming

arrangement is not illustrated. The viewing zone in FIG. **11** may be located in e.g. a channel **604** of a cuvette **603**. In FIG. **12**, the viewing zone may be located e.g. along the droplets of the jet stream **519** leaving the nozzle **518**. In FIG. **13**, the viewing zone maybe located e.g. in the plane of the substrate. The exit area of the microscope objective is an area through which scattered light and fluoresced light impinging from an object present in the viewing zone passes, which scattered and fluorescent light is reflected by the concave mirror of the microscope objective. The aberration corrector plate **602** in FIG. **11**, **612** in FIGS. **12** and **618** in FIG. **13** may be located in the exit area. It should be noted that the corrector plate may be used, in particular in combination with a spherical mirror **601**, **610**, **617**. However the corrector plate may be omitted when using a concave mirror having already implemented a correcting shape. Thus, the exit area does not have to include a corrector, if a concave mirror has an appropriate shape and the gain of the corrector plate is not required. As can be seen in FIGS. **11**, **12** and **13**, the viewing zone is arranged between the concave mirror arrangement and the exit area. The concave mirror **601**, **610**, **617** is arranged to reflect scattered and fluoresced light impinging from an object present in the viewing zone to the exit area. The illumination beam forming arrangement **505** is illustrated e.g. in FIG. **8**A. FIG. **8**A illustrates an arrangement of FIG. **11** having attached illumination beam arrangement **505** to the cuvette **603**. The illumination beam arrangement **505** is arranged so that an illumination beam entering the illumination beam forming arrangement is pre-definitely formed at the viewing zone. A path of an illumination beam from an illumination system can be seen e.g. in FIG. **1** or **3**A. FIGS. **11**, **12** and **13** as well as FIG. **8**A illustrate that the concave mirror arrangement, the viewing zone and the exit area are arranged along a first axis, also referred to as x-axis. FIG. **9**A illustrated that an optical image of the viewing zone, e.g. within channel **604** in FIG. **9**A is formed outside the composite microscope objective in the image plane **605** with image locations **606**, **607** and **608**. The illumination beam forming arrangement **505** is arranged so that an illumination beam impinges the viewing zone along a second axis, also referred to as z-axis, which is substantially perpendicular to said x-axis. The above described cuvette **603** may be manufactured of an optical transparent material, wherein the viewing zone is formed in the cuvette, in particular in the channel **604** of the cuvette **603**. The channel extends along a third axis, also referred to as y-axis being substantially perpendicular to the x-axis and the z-axis, so that a liquid flow in the channel flows along the y-axis, as illustrated e.g. in FIG. **5**D, wherein the viewing zone is located within the channel. FIGS. **8** and **8**A illustrated that the cuvette **603** may be of rectangular cross section in a plane of the first axis/x-axis and second axis/z-axis. It should be noted that the cross section of the cuvette **603** may also be of a form, that a sheath flow covering the sample flow forces the sample flow into a rectangular cross section. The cross section of the channel **604** may be constant along the y-axis, but may also vary along the y-axis. In particular the channel may have a focused cross section in the area of the viewing zone. The viewing area may include a plurality of predefined viewing points distributed along the y-axis for different illumination wavelengths, as can be seen in FIG. **33**, or along the z-axis, which may be a varying focal point varying along the z-axis, when adjusting the objective **60** with respect to the illumination system **50**, as will described later. Although element **505** may be allocated to the illumination system **50**, element **505** may also be part of the objective **60**, in particular it may be attached to the cuvette **603**. The illumination beam forming arrangement **505** is adapted to compress an illumination beam, so that the illumination beam in the viewing zone has a compressed dimension along the y-axis. The illumination beam forming arrangement **505** may be a cylindrical lens, in particular having a cylindrical axis parallel to the x-axis, as can be seen in FIGS. **5**D and **5**E. It should be noted that the illumination beam forming arrangement can be assembled by a plurality of optical elements, so that the arrangement **505** may not have a defined axis. The aberration corrector arrangement **602**, **612**, **618** may be arranged in the exit area, as can be seen in FIGS. **11**, **12** and **13**. The aberration corrector arrangement may be an aspheric lens made of optically transparent material. As can be seen in FIG. **9**A, said aberration corrector arrangement may have a first zone with negative optical power, a second zone radially inside the first zone with positive optical power, and a neutral zone between the first zone and the second zone. The neutral zone in FIG. **9**A is thinner than each of the first zone and the second zone, so that light reflected from the concave mirror arrangement passing through said aberration corrector arrangement forms a focal area. Although FIG. **9**A illustrates a corrector plate with convex and concave portions, it should be noted that the positive and negative optical power may be achieved by using different optical materials at different locations of the corrector plate. The concave mirror arrangement **601**, the viewing zone and the aberration corrector arrangement **602** form a reversed Schmidt camera. The concave mirror arrangement may be formed by plane-convex lens, as can be seen in FIG. **11**. The concave mirror may be a plano-concave back surface mirror. The plano-concave back surface mirror may be made from an optically transparent material. As can be seen in FIG. **8**A a plano-surface of said plano-concave back surface mirror is optically coupled to a flat surface of said cuvette. Plano-concave back surface mirror means that although the optical lens body is a plano-convex lens body, the surface when seeing into the mirror, which is the inside of the optic body, is concave. The plano-surface of said plano-concave back surface mirror may also be optically coupled to said flat, transparent substrate, as can be seen in FIG. **13**. Said concave mirror may also be a front surface mirror, as can be seen from FIG. **12**. It should be noted that the mirror of FIG. **12** can also be used in combination with a cuvette, and the mirror of FIG. **11** can also be used for a jet stream. The concave mirror arrangement, the aberration corrector arrangement and the illumination beam forming arrangement may be attached to the cuvette by at least one of index matching gel, index matching fluid, optical adhesive material and optical contact bonding. It should be noted that also a combination may be used for attaching.

As can be seen in FIG. **1**, **3**A, **31**, **32** or **34-38**, the composite microscope objective **60** may be combined with or comprise an illumination system. Although not mandatory, the illumination may be an illumination system as described above, in particular with a laser source **501**, an collimating optical arrangement **502** to form a collimated laser beam and a beam shaping arrangement **504**, **505** being adapted to shape a collimated beam, wherein the beam shaping arrangement includes the illumination beam forming arrangement **505**. The laser source may be a laser diode and the collimating arrangement may be arranged with respect to the laser diode so as to form a collimated beam. As an alternative, the laser source may be a conventional laser with an optic arrangement to form a collimated beam of a desired cross section. The laser diode and the collimation optical arrangement, or alternatively the conventional

laser with the optics are adapted to form a beam having an elliptical cross section having a major axis and a minor axis, wherein the minor axis is oriented substantially along the y-axis and the major axis is oriented substantially along the x-axis, as can be seen in FIG. **5**E. The beam shaping arrangement may include a major axis optical beam compressing arrangement **504** being adapted to compress at least the major axis of the collimated elliptical beam. The illumination beam forming arrangement **505** is adapted to compress at least the minor axis of the collimated elliptical beam. This can be seen for example in FIG. **1**, **3**A or **6**.

The viewing zone may be movable along the z-axis with respect to the illumination system so as to vary a focus of the compressed elliptical beam within the viewing zone along the z-axis. This allows a scanning along the z-axis. In particular this allows to sense or scan properties of a cell in the viewing zone at different locations. It should be understood, that either the objective **60** may be controllably moved or the illumination system **50** or both. It should also be understood that the variation of the focus may also be achieved by moving single components of the illumination system, e.g. one of the mirrors **523***b*, **523***a* or the element **504**, as illustrated in FIG. **7**. Also single components of the objective may be moved to vary the focus along the z-axis. The actuation can be conducted by e.g. piezo actuators or acoustic actuators. In particular the varying focus can be achieved by a modulation or an sinusoidal oscillation of the respective component. Thus the cuvette is movable with respect to the laser source so as to spatially vary a focus of the laser source in the channel. For this purpose, a control unit can be provided being adapted to control the movement of components of the composite microscope objective along the z-axis so as to spatially vary a focus of the laser source in the channel. It should be noted that likewise also a variation of the focus can be achieved along the y-axis or even the x-axis.

Combined Wavelength Division Multiplexer (WDM) with Semiconductor Photo Detector

FIGS. **25**, **27**, and **28** illustrate a wavelength division multiplexer (WDM) for separating light emitted from a light source into multiple colored bands. The wavelength division multiplexer may comprise an imaging optical arrangement **902**, a dichroic filter arrangement **903**, **904**, a semiconductor photo detector **906** and a focusing optical arrangement **905**. The imaging optical arrangement **902** forms a beam of light from the light emitted from a light source **901** and produces an image of substantially the same size as the effective size of said imaging optical arrangement. The light source may be an outlet of an optical fiber, which fiber may transfer detected light from the microscope objective **60** to the WDM. The dichroic filter arrangement **903**, **904** may be located between said imaging optical arrangement **902** and said image, and separates the beam of light into a first branch and a second branch of distinctive colors. As can be seen in FIG. **25**, the first branch travels toward element **905**, whereas the second branch travels toward element **907**. The semiconductor photo detector **906** is located in the first branch behind the focusing optical arrangement **905**, which is located between the dichroic filter arrangement **903**, **904** and the semiconductor photo detector **906** so as to focus the beam of light onto the semiconductor photo detector. Light means an electromagnetic wave, coherent or non-coherent, particularly having a wavelength which transits the used optical elements. In particular, the term light is not limited to the visible part of light, e.g., light between 380 nm and 780 nm. It should be noted that also infrared light and ultraviolet light may be used, if the used optical components are capable of being operated with such wavelengths. The focusing optical element arrangement **905** is located in or in proximity to an image plane of said image. It should be noted that the imaging arrangement **902** as well as the focusing arrangement **905** may be composed of more than one optical element. In particular, a plurality of lenses may be combined so as to form the imaging arrangement **902** or the focusing arrangement **905**. Likewise the dichotic filters may be composed of more than one filter or optic element. In particular to compose particular properties of the respective arrangements. The focusing optical arrangement and the semiconductor photo sensor may be arranged to each other that the beam of light is focused to a spot having a diameter of less than 1.0 mm, particularly of less than 0.6 mm. In particular when using semiconductor sensors the signal to noise ration SNR can be significantly reduced. As can be seen in FIG. **25**, the wavelength division multiplexer as described above may further comprise an image relay optical arrangement **907**. This image relay optical arrangement may be located in or in proximity to an image plane produced by said imaging optical arrangement in the second branch, wherein said image relay optical arrangement is adapted to produce an image of said imaging optical arrangement in a third branch having substantially the same size as the image in the second branch. The third branch in FIG. **25** is the beam traveling from the element **907** toward element **909**. The effective size of the optical element is the area where beams from the object transit the optical element. Consequently, producing an image of substantially the same size as the effective size of said optical element means that between the optical element and the image the beam is within a virtual parallel tube. For illustration purposes, in the hypothetical case the object is a pinhole the optical element produces a collimated beam. The image relay optical arrangement **907** may be a concave mirror. Alternatively the image relay optical arrangement **907** may be a combination of a lens and a mirror, in particular a plane mirror. The wavelength division multiplexer as described above may further comprise an additional dichroic filter arrangement **909**, wherein the additional dichroic filter arrangement is located between said image relay optical arrangement **907** and an image produced by said image relay optical arrangement **907**. Said additional dichroic filter arrangement **909** from the third branch produces a fourth branch and a fifth branch of the beam of light having distinctive colors. The fourth branch in FIG. **25** is the beam traveling from the dichroic filter **909** toward the focusing element **908**, whereas the fifth branch is the beam traveling from the dichroic filter toward the element **910**. The above described wavelength division multiplexer further may comprise an additional focusing optical arrangement **908** and an additional semiconductor photo detector, wherein the additional focusing optical arrangement **908** is located in the fourth branch and focuses the beam of light in the fourth branch so as to focus the beam of light onto the additional semiconductor photo detector. The wavelength division multiplexer may further comprise a plurality of image relay optical arrangements **910**, **911**, **912**, **913**, a plurality of dichroic filter arrangements **914**, **915**, **916**, **917**, a plurality of semiconductor photo detectors and a plurality of focusing optical arrangements **918**, **919**, **920**, **921**, wherein each of the plurality of focusing optical arrangements is arranged between a respective one of the plurality of dichroic filter arrangements and a respective one of the plurality of semiconductor photo detectors so as to form a cascaded arrangement, as can be seen in FIG. **25**. The additional focused spots may have a diameter of less than 1.0 mm, particularly of less than 0.6 mm for multiple

colored bands of said beam of light. The plurality of dichroic filter arrangements are arranged in a common plane, as can be seen in FIG. **25**A. The wavelength division multiplexer may further comprise a plan-parallel optical basis having a first surface and second surface parallel thereto, wherein the plurality of dichroic filter arrangements are arranged parallel, preferably in abutment to the first surface of the plan-parallel optical basis, as described with respect to the WDM **90**. The dichroic filter arrangements are assembled using a template that includes two optically flat glass plates bonded together in optical contact, wherein the dichroic filter arrangements are bonded to a filter holder using the template such that a coated filter surface of the dichroic filter arrangements are indented and optically parallel to a reference surface of the filter holder, as can be seen in FIGS. **29**A, B and C. The reference surface of the filter holder rests against an optically flat surface of an reference block included in the wavelength division multiplexer thereby providing consistent optical alignment when installing the dichroic filter arrangements into the wavelength division multiplexer. The respective image relay optical arrangements may be formed into the second surface of the plan-parallel optical basis, as can be seen in FIG. **25**A. At least one of the semiconductor photo detectors is an avalanche photo diode detector. As an alternative or in addition, at least one of the semiconductor photo detectors is a carbon nanotube detector.

## INDUSTRIAL APPLICABILITY

Although an embodiment of the present disclosure of an LD based optical system for flow cytometric application has been described in some detail, and equally advantageous embodiments have also been described for a stream based flow cytometric instrument, it will be apparent to those of ordinary skill in the art that many modifications and variations of the described embodiment are possible in the light of the above teachings without departing from the principles and concepts of the disclosure as set forth in the claims.

Although an embodiment of the present disclosure of wavelength division multiplexing device for separating light beam from an extended light source into multiple color bands has been described in some detail, and several other equally advantageous embodiments have also been described, it will be apparent to those ordinary skilled in the art that many modifications and variations of the described embodiments are possible in the light of the above teachings without departing from the principles and concepts of the disclosure as set forth in the claims.

Although the present disclosure describes certain exemplary embodiments, it is to be understood that such disclosure is purely illustrative and is not to be interpreted as limiting. Consequently, without departing from the spirit and scope of the disclosure, various alterations, modifications, and/or alternative applications of the disclosure will, no doubt, be suggested to those skilled in the art after having read the preceding disclosure. Accordingly, it is intended that the following claims be interpreted as encompassing all alterations, modifications, or alternative applications as fall within the true spirit and scope of the disclosure.

What is claimed is:

**1**. A flow cytometer, comprising:

a light source arranged to illuminate a stream of particles in a viewing zone of a flow cell in the flow cytometer;

a collecting optical element configured to collect and focus fluorescent light emitted by a particle illuminated by the light source such that the fluorescent light leaving the collecting optical element converges; and

a wavelength division multiplexer (WDM) configured to separate into color bands the fluorescent light collected by the collecting optical element, the WDM including,

a collimating optical element that is separate from the collecting optical element and is arranged to receive the fluorescent light collected by the collecting optical element, the collimating optical element configured to collimate the fluorescent light,

a first semiconductor detector configured to detect and quantitate a first color band in the fluorescent light,

a first curved mirror arranged to receive at least a portion of the fluorescent light after the fluorescent light has passed through the collimating optical element, the first curved mirror configured to reflect the portion of the fluorescent light towards the first semiconductor detector, and

a first dichroic filter optically disposed between the first curved mirror and the first semiconductor detector, the dichroic filter configured to allow the first color band in the fluorescent light to pass through the first dichroic filter onto the first semiconductor detector, and to reflect a second color band in the fluorescent light away from the first semiconductor detector.

**2**. The flow cytometer of claim **1**, further comprising an optical fiber optically disposed between the collecting optical element and the WDM, the optical fiber arranged and configured to deliver the fluorescent light collected by the collecting optical element to the WDM.

**3**. The flow cytometer of claim **1**, further comprising a first focusing optical element optically disposed between the first dichroic filter and the first semiconductor detector, the first focusing optical element configured to focus the first color band in the fluorescent light passing through the first dichroic filter onto the first semiconductor detector.

**4**. The flow cytometer of claim **3**, further comprising a second semiconductor detector arranged and configured to detect and quantitate the second color band in the fluorescent light reflected by the first dichroic filter.

**5**. The flow cytometer of claim **4**, further comprising:

a second curved mirror and a second dichroic filter, the second curved mirror arranged and configured to reflect at least a portion of the fluorescent light reflected by the first dichroic filter towards the second semiconductor detector, the second dichroic filter arranged and configured to allow the second color band in the fluorescent light to pass through the second dichroic filter onto the second semiconductor, and to reflect a third color band in the fluorescent light away from the second semiconductor detector; and

a third semiconductor detector arranged and configured to detect and quantitate the third color band in the fluorescent light reflected by the second dichroic filter.

**6**. The flow cytometer of claim **1**, wherein the first curved mirror reflects the portion of the fluorescent light to form an image.

**7**. The flow cytometer of claim **6**, wherein the formed image is an image of the collimating optical element.

**8**. The flow cytometer of claim **1**, wherein the light source is arranged and configured to illuminate the stream of particles from one side of the flow cell, and wherein the collecting optical element is arranged and configured to collect fluorescent light from another side of the flow cell.

**9**. The flow cytometer of claim **8**, wherein the collecting optical element is further configured to collect and focus side-scatter light scattered by the illuminated particle in the stream.

**10**. The flow cytometer of claim **1**, wherein the light source comprises a plurality of lasers.

**11**. The flow cytometer of claim **10**, wherein the plurality of lasers comprises a first laser configured to illuminate a particle in the stream at a first location in the viewing zone, and a second laser configured to illuminate the particle at a second location in the viewing zone.

**12**. The flow cytometer of claim **1**, wherein the first curved mirror is arranged to receive the portion of the fluorescent light when the portion of the fluorescent light is collimated.

**13**. A flow cytometer comprising:

a light source arranged to illuminate a stream of particles in a viewing zone;

a collecting optical element configured to collect and focus fluorescent light emitted by a particle illuminated by the light source such that the fluorescent light leaving the collecting optical element converges; and

a wavelength division multiplexer (WDM) configured to separate into color bands the fluorescent light collected by the collecting optical element, the WDM including,

a collimating optical element that is separate from the collecting optical element and is arranged to receive the fluorescent light collected by the collecting optical element, the collimating optical element configured to collimate the fluorescent light;

a row of mirrors arranged and configured to sequentially reflect different color bands of the fluorescent light collected by the collecting optical element after the fluorescent light has passed through the collimating optical element, the row of mirrors including at least one curved mirror;

a row of dichroic filters opposed to the row of mirrors, each of the dichroic filters configured to pass one color band of the fluorescent light reflected by a mirror in the row of mirrors, and to reflect another color band of the fluorescent light reflected by the mirror;

a row of semiconductor detectors, each of the semiconductor detectors arranged and configured to detect and quantitate the band of fluorescent light passing through a dichroic filter in the row of dichroic filters.

**14**. The flow cytometer of claim **13**, further comprising a row of focusing optical elements, each of the focusing optical elements in the row arranged and configured to focus the band of fluorescent light passing through a dichroic filter in the row of dichroic filters onto the corresponding semiconductor detector.

**15**. The flow cytometer of claim **14**, wherein the row of mirrors includes at least one curved mirror configured to form an image in the fluorescent light reflected by said curved mirror.

**16**. The flow cytometer of claim **15**, wherein the image formed by said curved mirror is an image of the collimating optical element.

**17**. The flow cytometer of claim **13**, wherein the row of mirrors and row of dichroic filters are arranged such that fluorescent light received by the WDM is reflected back and forth between the row of mirrors and the row of dichroic filters in a zig-zag pattern.

**18**. A flow cytometer, comprising:

a light source arranged to illuminate a flow-stream of particles in a viewing zone from a first side of the flow stream;

a collecting optical element arranged on a second side of the flow stream, the collecting optical element configured to collect and focus fluorescent light emitted by a particle illuminated by the light source such that the fluorescent light leaving collecting optical element converges; and

a wavelength division multiplexer (WDM) configured to separate into color bands the fluorescent light collected by the collecting optical element, the WDM including,

a collimating optical element that is separate from the collecting optical element and is arranged to receive the fluorescent light collected by the collecting optical element, the collimating optical element configured to collimate the fluorescent light,

a first semiconductor detector configured to detect and quantitate a first color band in the fluorescent light,

a first curved mirror arranged to receive at least a portion of the fluorescent light after the fluorescent light has passed through the collimating optical element, the first curved mirror configured to reflect the portion of the fluorescent light towards the first semiconductor detector, and

a first dichroic filter disposed between the first curved mirror and the first semiconductor detector, the dichroic filter configured to allow the first color band in the fluorescent light to pass through the first dichroic filter onto the first semiconductor detector, and to reflect a second color band in the fluorescent light away from the first semiconductor detector.

**19**. The flow cytometer of claim **18**, wherein the first side of the flow stream is orthogonal to the second side of the flow stream.

**20**. The flow cytometer of claim **19**, wherein the collecting optical element is further configured to collect and focus side-scatter light scattered by the illuminated particle.

* * * * *