Journal of Diabetes Science and Technology
Volume 4, Issue 2, March 2010
© Diabetes Technology Society

COMMENTARY

Bluetooth Low Energy: Wireless Connectivity for Medical Monitoring

Alf Helge Omre

Abstract

Electronic wireless sensors could cut medical costs by enabling physicians to remotely monitor vital signs such as blood pressure, blood glucose, and blood oxygenation while patients remain at home.

According to the IDC report "Worldwide Bluetooth Semiconductor 2008-2012 Forecast," published November 2008, a forthcoming radio frequency communication ("wireless connectivity") standard, Bluetooth low energy, will link wireless sensors via radio signals to the 70% of cell phones and computers likely to be fitted with the next generation of Bluetooth wireless technology, leveraging a ready-built infrastructure for data transmission. Analysis of trends indicated by this data can help physicians better manage diseases such as diabetes.

The technology also addresses the concerns of cost, compatibility, and interoperability that have previously stalled widespread adoption of wireless technology in medical applications.

J Diabetes Sci Technol 2010;4(2):457-463

Introduction

Health care reform is a hot topic; governments across the 30-member-nation Organization for Economic Co-operation and Development are looking for ways to cut costs without compromising patient care. The organization's statistics reveal that, across a sample of 15 of its member nations, from a baseline of 100 in 1980, while gross domestic product had climbed to 205 in 2005, health care spending had skyrocketed to 280.[1]

A commercial report[2] concluded that the use of body-worn wireless electronics monitors could save the health care industry $25 billion by 2012. These wireless monitors that could link to existing cellular or Internet infrastructure—by radio communications in an unlicensed portion of the electromagnetic spectrum (2.4 GHz)—would allow patients to shorten or avoid hospital stays while still being in frequent electronic contact with their health care providers. Wireless monitoring could also replace expensive home visits from community nursing staff to take routine measurements, because medical data could be sent via cellular or Internet infrastructure.

Moreover, savings are likely to become even greater if predictions come true that over 600 million people

Author Affiliation: BTech–EEE, Nordic Semiconductor, Oslo, Norway

Abbreviations: (BG) blood glucose, (CGM) continuous glucose monitoring, (EMI) electromagnetic interference, (FCC) Federal Communications Commission, (FDA) Food and Drug Administration, (HDP) Health Device Profile, (PC) personal computer, (SIG) special interest group, (SMS) short message service

Keywords: Bluetooth low energy, diabetes, electronic sensors, low-power radio, medical monitoring, radio frequency

Corresponding Author: Steven Keeping, B.Eng. (Hons), Nordic Semiconductor ASA, 1 Barrie Place, Davidson, NSW 2085, Australia; email address steven.keeping@nordicsemi.no

Petitioner WHOOP, Inc. Ex1035
Page 1 of 7

worldwide will suffer from chronic diseases and that spending on such diseases will increase. For example, in the United States alone, without significant intervention, spending is expected to increase from the current $500 billion a year to $685 billion by 2020.[3]

Until now, no wireless connectivity technology met all the requirements needed for widespread adoption. These requirements are summarized below:

- Interoperability—ensuring that products from different manufacturers can communicate with each other;
- Low-power operation—so medical monitors can run for months or even years on tiny coin-cell batteries, reducing maintenance and running costs;
- Customized software optimized for medical applications and transmitting data in a format requested by medical authorities;
- Compatibility—radio devices need to coexist with other radio transceivers and cause no electromagnetic interference (EMI) in other sensitive electronics devices;
- Transmission of data must be secure to protect confidentiality; and
- Sensors need to communicate with services such as the Internet and the cellular network so that information can be relayed to remote health practitioners.

In this article, the author argues that Bluetooth low energy is the first wireless communication technology that meets these requirements.

Interoperability

The interoperability requirement discounts any of the commercially successful proprietary technologies from being adopted for wireless monitoring in health care applications, because there is little or no chance that products from different manufacturers will be able to communicate.

There are four interoperable technologies: Wi-Fi, ZigBee, Bluetooth, and Bluetooth low energy. Medical equipment manufacturers adopting any of these wireless connectivity technologies must have their products approved by the custodians of the various standards. This approval guarantees that equipment from different manufacturers will communicate. For example, in the consumer sector, users routinely expect a Bluetooth-branded wireless headset from manufacturer A to successfully link with a Bluetooth-equipped cell phone from manufacturer B.

Wi-Fi is a proven solution for connecting computers across wireless local area networks. It offers wide bandwidth (300 Mbps), operates in the license-free 2.4 GHz band (although other bands are used depending on the region), and has an indoor range of around 30 m.

Wi-Fi's main drawbacks are its relative expense and power consumption (demanding regularly recharged, bulky lithium-ion batteries) when used in continuous or frequent medical monitoring applications.

ZigBee wireless technology is based on a standard maintained by an alliance of commercial companies called the ZigBee Alliance. ZigBee was designed as a low-power technology, and modern versions can run from coin-cell-type batteries (for example, CR2032, 3V cells). It operates in the 2.4 GHz band (although variants operate in other bands). Range extends up to hundreds of meters.

ZigBee does have the potential for use in medical wireless monitoring (see section titled Wireless Technologies Adopted by Continua Health Alliance later); however, a disadvantage is that the modest bandwidth of 250 kbps increases the time it takes to send a set amount of data by up to four times compared to other low-power technologies such as Bluetooth low energy (see later discussion). Transmitting data uses battery power, demanding bulkier batteries or considerably shortening the life of small batteries. Moreover, ZigBee cannot communicate directly with existing cellular and Internet infrastructure.

Bluetooth is based on a standard maintained by the Bluetooth Special Interest Group (SIG), a 14,000-member organization of commercial electronics companies.

So-called "classic Bluetooth" technology (to differentiate it from Bluetooth low energy described later) also operates in the unlicensed 2.4 GHz band. The bandwidth (depending on the version) ranges from 1 to 24 Mbps. Range is up to 30 m. Classic Bluetooth is already in use in some medical products, including blood glucose (BG) meters.

Although classic Bluetooth can run from coin cells, its relatively high power consumption limits battery life to a few tens of hours. This makes the technology unsuitable for continuous medical monitoring applications. However, a lower power consumption form of Bluetooth technology,

Petitioner WHOOP, Inc. Ex1035
Page 2 of 7

Bluetooth low energy, overcomes this problem (see section *An Example Application: Blood Glucose Monitoring* on page 461).

Bluetooth low energy also operates in the 2.4 GHz band. It features a bandwidth of 1 Mbps (four times that of ZigBee) with a range of 15 to 30 m.

The main drawbacks of Bluetooth low energy are that it is an unproven technology and is unlikely to be widely available for medical product makers to incorporate into their products until the end of 2010. Medical products using Bluetooth low energy will probably not reach the market until 2011.

Bluetooth low energy features two implementations, namely, "dual mode" and "single mode" (see **Figure 1**). Single mode devices are compact radio communication units suitable for incorporation into wireless medical monitors measuring just tens of millimeters in size. Power consumption is very low, allowing such medical monitors to run for many months or even years on standard coin-cell batteries. For example, in an application transmitting BG level measurements once every minute, on a continuous 24 h/365-day basis, a Bluetooth-low-energy-enabled wireless medical monitor powered by a CR2032 coin cell will have a battery lifetime of at least 1.5 years.

Dual mode devices are radio communication devices targeted at handsets and personal computers (PCs). It is proposed that cell phone makers will use these devices when they become available, because they cost only slightly more than the current type (classic Bluetooth)—used today in around 70 percent of handsets—but offer consumers much more functionality. The most important added functionality of a cell phone or PC equipped with a dual mode Bluetooth low energy device is that it will be able to communicate directly with single mode devices. Consequently, medical data can be sent from a wireless monitor to a cell phone or PC and from there to a remote physician (see **Figure 2**).

Health Device Profile

The Bluetooth SIG has developed "Health Device Profile" (HDP) software to optimize performance of classic Bluetooth for health applications and deliver data in a standard format requested by the medical authorities. Similarly, the SIG is developing HDP software for Bluetooth low energy.

Classic Bluetooth's HDP is a "one-size-fits-all" solution that caters to all types of medical products. Consequently, classic Bluetooth's HDP is a large program requiring a lot of memory and battery power. Bluetooth low energy has a number of HDPs customized to a given application or applications. A medical product designer can select one or several profiles to suit their specific application, reducing the memory and power overheads. Consequently, a Bluetooth-low-energy-equipped end product will be simpler, cheaper, and more power efficient than would be possible with an equivalent classic-Bluetooth-equipped device.

The first version of Bluetooth low energy will include HDPs for medical (and fitness) applications such as body temperature, blood pressure, weight scale, glucose, pulse

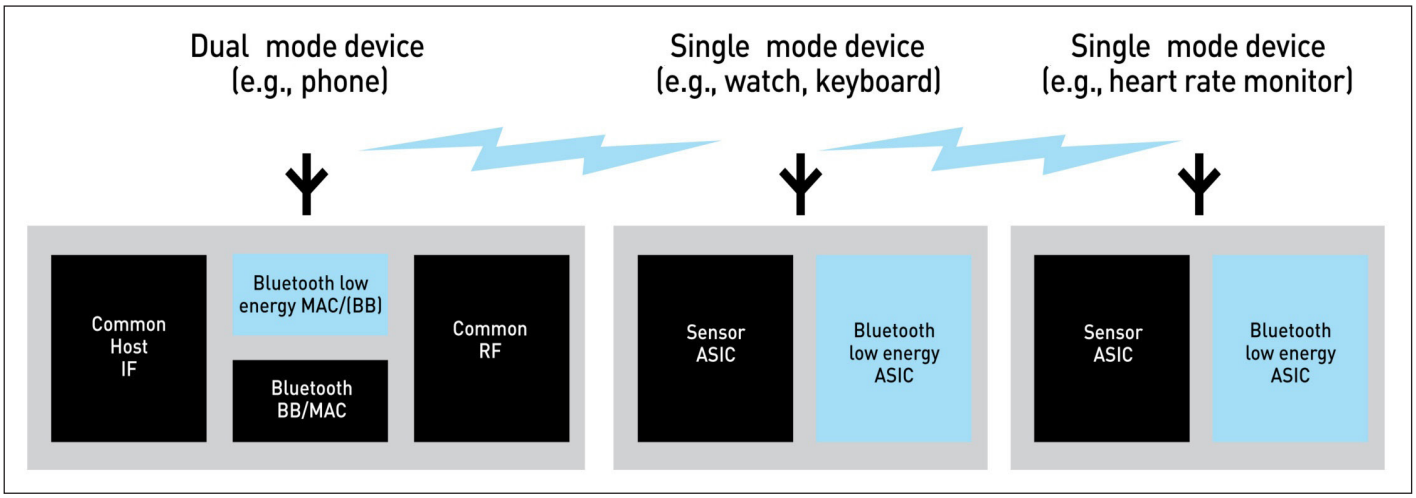

Figure 1. Bluetooth low energy single mode devices will communicate directly with dual mode devices likely to be fitted to the next generation of cell phones and/or other single mode devices. RF, radio frequency; IF, intermediate frequency; MAC, media access control; BB, base band; ASIC, application specific integrated circuit.

Petitioner WHOOP, Inc. Ex1035
Page 3 of 7

oximetry, heart rate, pedometer, speed, distance, cycle cadence, simple remote control, and battery status.

Electromagnetic Compatibility

The U.S. Food and Drug Administration (FDA) and other medical bodies are concerned about the potential EMI generated by wireless connectivity devices.

The FDA states, "Wireless coexistence and data latency remain concerns because the data transfer rate can slow slightly or even dramatically with an increase in the number of similar transmitters in a given location. In many cases it is essential that medical data, including real-time waveforms and critical control signals and alarms, be transmitted and received without error." [4]

Worse, Bluetooth low energy radios broadcast in the notoriously crowded 2.4 GHz band. Licensing bodies such as the Federal Communications Commission (FCC) have attempted to mitigate the effects of EMI by restricting the power output of radio devices operating in the license-free parts of the radio spectrum to limit the possible EMI with sensitive electronics.[5] Operating in the 2.4 GHz band is a major challenge with consequences for product design.

That said, Bluetooth low energy operates at 1 mW (0 dBm) output power—a modest output that falls well below the FCC's guidelines of 125 mW ("maximum peak conducted output power of the intentional radiator"). In addition, the technology only transmits for 1% (or less) of the time and then only in short bursts lasting a few hundred microseconds. Most modern medical electronics have been designed with a high degree of EMI immunity and are very unlikely to malfunction in the presence of such a low power, short duration transmission.

However, manufacturers would have to embark on a program of testing to ensure their products meet the electromagnetic compatibility requirements of the medical authorities. (Note that, because the Bluetooth SIG has newly adopted Bluetooth low energy, no test data are yet available for presentation in this article.)

Perhaps more importantly, medical wireless monitors need a high degree of immunity from other radio sources to ensure communications are not interrupted. To do this, Bluetooth low energy employs a frequency-hopping spread spectrum interference avoidance scheme. When making an initial connection, the two transceivers transmit using one of three fixed channels (trying the other two in turn if no signal is received) in order to establish the link.

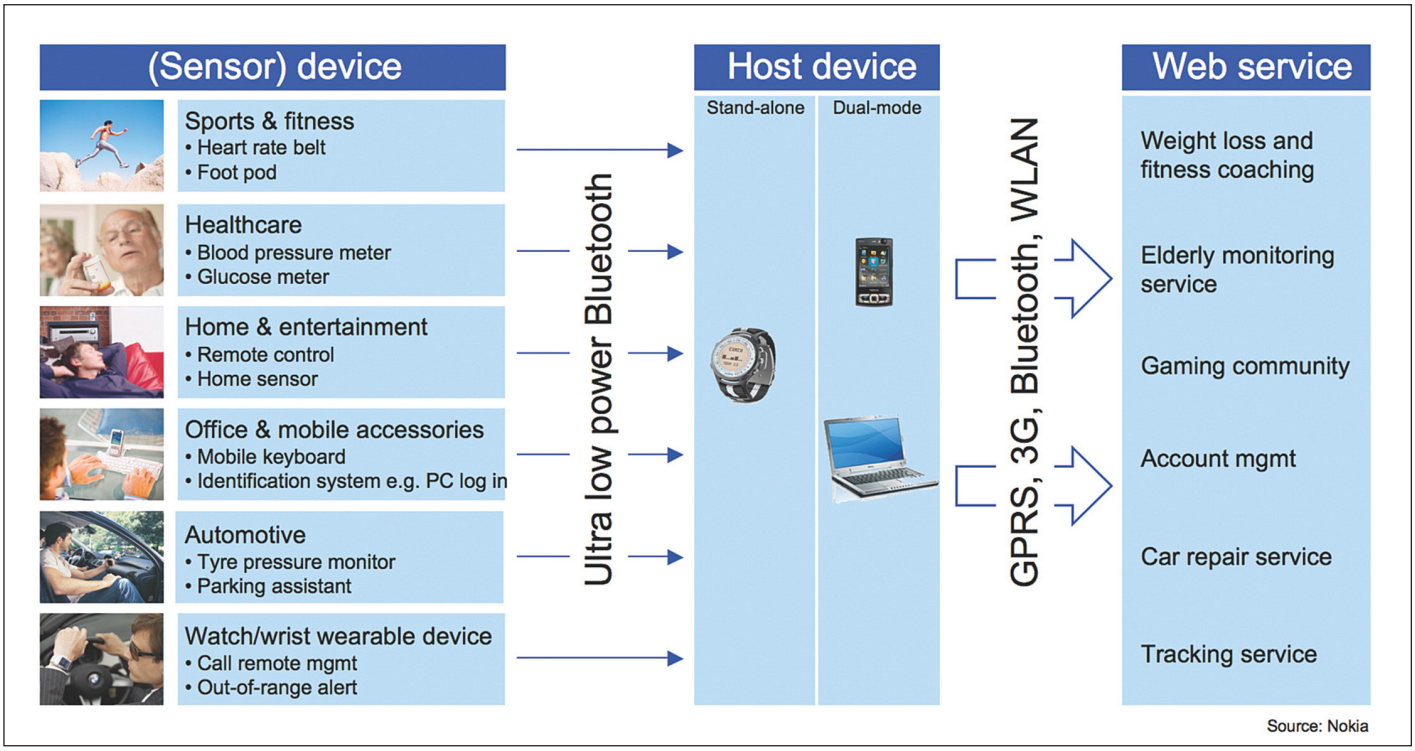

Figure 2. Bluetooth low energy will extend interoperable wireless connectivity to coin-cell-powered wireless sensors in health care, fitness, and related sectors. WLAN, wireless local area network; GPRS, general packet radio service.

Petitioner WHOOP, Inc. Ex1035
Page 4 of 7

This is a faster and more power-efficient method of searching for a compatible radio source compared to scanning the whole band.

Once communication has been established, the devices begin to rapidly hop between 37 dynamic data channels within the 2.4 GHz band hundreds of times per second in a synchronized pseudo-random pattern to minimize the likelihood of trying to communicate on the same frequency as another radio source. If a clash occurs, the Bluetooth low energy transceivers jump to another channel in a matter of milliseconds and "mark" the corrupted channel so it is not reused. Classic Bluetooth uses a similar scheme (albeit with 79 channels) and has been proven to work reliably in thousands of use cases.

Data Security

Medical data are highly confidential, and it is important that an unauthorized receiver does not intercept information transmitted from a wireless medical sensor.

To ensure data remain confidential, Bluetooth low energy inherits the encryption, authentication, and authorization security from classic Bluetooth. The encryption technique uses the advanced encryption standard-128 algorithm.[6] (Advanced encryption standard is an encryption technique adopted as a standard by the U.S. government.)

In addition to security protection, Bluetooth low energy also employs privacy protection in order to stop "tracking" by unauthorized receivers. This is done by limiting the ability to track a transmitting device through the use of a random device address that is changed frequently.

Wireless Technologies Adopted by Continua Health Alliance

In June 2009, Continua Health Alliance—an open industry coalition of 190 companies collaborating to improve the quality of personal health care—selected two wireless technology standards for inclusion in the next version of its interoperability design guidelines.[7] (The design guidelines provide information for electronics product manufacturers on how to design their products to meet Continua's agreed interoperability standards and receive the alliance's certification logo.)

After consideration of required power levels, cell phone ubiquity, required range, and anticipated market penetration, the alliance chose Bluetooth low energy (pending finalization of the specification) for medical wireless monitoring of a user's health and fitness levels. Additionally, Continua chose ZigBee Health Care technology for low-power sensors for local area networks of devices such as motion detectors and bed-pressure sensors.

An Example Application: Blood Glucose Monitoring

Type 1 diabetes is caused by the patient's inability to produce any insulin. The more common type 2 diabetes is caused by the patient's immunity to insulin, preventing its uptake by the body's cells. Rates of type 2 diabetes are increasing in developed countries due to an aging and increasingly overweight population. In the United States, for example, according to the Centers for Disease Control, approximately 23.6 million people, or 8% of the population, have diabetes, of which 95% suffer from type 2 diabetes. The total prevalence of diabetes increased by 13.5% from 2005 to 2007.[8]

Uncontrolled diabetes can cause severe long-term health problems such as renal failure, blindness, and arterial disease. These problems are expensive to treat, and as the number of sufferers climbs, the medical authorities are finding it increasingly difficult to pay the bill.

Good management of diabetes is one way to mitigate the cost of treatment, because it delays or even prevents the onset of related health complications. Management depends on frequent and accurate measurement of BG to maintain normal levels (a fasting range of 4 to 6 mmol/liter).

A BG meter measures BG levels from a sample deposited on a test strip. Modern units hold information in a memory base for later recall at regular health checks. Patients are advised to record BG levels several times a day—more frequent measurements result in better control, as diet, exercise, or insulin injections can be adjusted quickly to stabilize high or low levels (see **Figure 3**).

Bluetooth low energy built into a BG meter offers several advantages in the management of diabetes. Data from the BG meter could be uploaded frequently to the patient's cell phone and from there to the physician's computer for review. An analysis of BG measurement trends would allow the physician to spot persistent out-of-normal-range episodes much earlier than the typically quarterly reviews allow and to advise on modifications to the diet either via phone call or short message service (SMS; also known as "texting") to a cell phone, for example, on a weekly basis.

Petitioner WHOOP, Inc. Ex1035
Page 5 of 7

In addition, the computing power of the cell phone allied to an Internet-downloadable application could highlight trends and advise the patient to modify their exercise regime, for example, to take a 20 min walk just after lunch. As a complement to regular medical consultation, such feedback would help the patient to better manage the condition, and management of diabetes is the critical step in preventing complications and drastically cutting long-term health care costs.

Bluetooth low energy is capable of communicating with a Web-based application without using either a cell phone or PC by using a Bluetooth router (a device that acts as a "gateway" between the Bluetooth low energy device and the Internet). The Web-based application can send messages back to the Bluetooth low energy device. This functionality would be useful if, for example, the diabetes patient has left their cell phone in the car.

Better diabetic control can be achieved by continuous glucose monitoring (CGM). Continuous glucose monitoring relies on very frequent measurement (for example, 288 glucose measurements every 24 h) of BG. One FDA-approved CGM device[9] uses a tiny glucose-sensing device inserted under the skin of the abdomen. The system automatically records an average glucose value every 5 min for up to 72 h.

Continuous glucose monitoring using wireless monitoring has major benefits to type 1 diabetes sufferers, because they are more prone to short-term complications, such as very low BG (hypoglycemia), that can occur between routine periodic measurements from finger pricks, leading to coma if not treated rapidly. It would be relatively simple to set thresholds (for example, at a BG level of 4 mmol/liter) to warn the user of danger.

Wireless medical monitoring could be used in conjunction with CGM as an emergency communication system for episodes of hypoglycemia. Provided the user cancelled the alarm—and ate some food—the wireless monitoring system would take no action. But if for some reason the alarm was not cancelled (for example, because the diabetes patient has collapsed), the wireless monitor could automatically communicate with the diabetes patient's cell phone to send a SMS to a nominated contact or even emergency services.

Summary

Wireless technology promises benefits for medical monitoring applications by freeing patients from inconvenient and restrictive wires. Further, wireless monitoring that can communicate with remote physicians via existing infrastructure could allow patients (especially the elderly) to remain in their homes while still under medical supervision. This promises to reign in escalating health care costs.

Figure 3. A BG meter measures BG levels from a sample deposited on a test strip. Modern units store information in a memory base for later recall at regular health checks.

Of all the commercially available wireless technologies, only Bluetooth low energy is capable of meeting all the requirements for medical applications, specifically, interoperability, low-power operation, electronic compatibility, secure data transmission, and direct communication with cellular and Internet infrastructure.

Nonetheless, significant testing will be required to ensure EMI between Bluetooth low energy products and other electronic devices causes no problems. That said, Bluetooth low energy is a very low-power transmission technology and uses sophisticated frequency-hopping algorithms that minimize the likelihood of interference.

Wireless medical monitoring with Bluetooth low energy will initially be targeted at BG measurement, but applications such as body temperature, blood pressure, pulse oximetry, and heart rate will follow shortly after. However, Bluetooth low energy is a new technology, and medical products equipped with it are unlikely to appear before 2011.

Funding:

Funding was received from Nordic Semiconductor ASA, a commercial semiconductor vendor.

Petitioner WHOOP, Inc. Ex1035
Page 6 of 7

Disclosure:

The author is employed by Nordic Semiconductor, a manufacturer of one of the technologies mentioned in the article (specifically, Bluetooth low energy).

References:

1. Developing new drugs: reds under our meds. The Economist. August 27, 2009. http://www.economist.com/business-finance/displaystory.cfm?story_id=E1_TQPNSPPV.
2. Hatler M, Gurganious D, Chi C. Wireless sensor networks for healthcare. ON World Inc. August 2008.
3. Scaling mount proteome to bring down chronic disease. The Pfizer Journal. 2001;1I(2):4–9.
4. U.S. Food and Drug Administration. Draft guidance for industry and FDA staff: radio-frequency wireless technology in medical devices. http://www.fda.gov/MedicalDevices/DeviceRegulationandGuidance/GuidanceDocuments/ucm077210.htm#4. Accessed February 10, 2010.
5. Title 47. Telecommunication. Chapter I: Federal Communications Commission. Part 15: radio frequency devices. Subpart C: intentional radiators. Section 15.247: operation within the bands 902–928 MHz, 240. http://edocket.access.gpo.gov/cfr_2007/octqtr/47cfr15.247.htm. Accessed October 7, 2009.
6. Wikipedia. Advanced encryption standard. http://en.wikipedia.org/wiki/Advanced_Encryption_Standard. Accessed October 7, 2009.
7. Continua Health Alliance. Continua Health Alliance looks to the future with the selection of two new low power radio standards, enabling expanded use cases. Press release. June 8, 2009.
8. Wikipedia. Diabetes mellitus type 2. http://en.wikipedia.org/wiki/Diabetes_mellitus_type_2. Accessed October 7, 2009.
9. WebMD. Diabetes and continuous glucose monitoring. http://diabetes.webmd.com/continuous-glucose-monitoring. Accessed February 10, 2010.

Petitioner WHOOP, Inc. Ex1035
Page 7 of 7