UNITED STATES PATENT AND TRADEMARK OFFICE

BEFORE THE PATENT TRIAL AND APPEAL BOARD

_____

SAMSUNG ELECTRONICS CO., LTD.,
SAMSUNG ELECTRONICS AMERICA, INC.,
FOSSIL GROUP, INC.,
FOSSIL STORES I, INC.,
FOSSIL PARTNERS, L.P.,
OURA HEALTH OY, AND
ONEPLUS TECHNOLOGY (SHENZHEN) CO., LTD.

Petitioners,

v.

OMNI MEDSCI, INC.,

Patent Owner.

_____

Case IPR2025-01250
Patent No. 9,651,533

_____

PETITION FOR *INTER PARTES* REVIEW

TABLE OF CONTENTS

I. INTRODUCTION 1
II. MANDATORY NOTICES UNDER 37 C.F.R. §42.8 2
A. Real Party-in-Interest 2
B. Related Matters 3
C. Lead and Back-Up Counsel 4
III. PAYMENT OF FEES 5
IV. REQUIREMENTS FOR *INTER PARTES* REVIEW 6
A. Grounds for Standing 6
B. Identification of Challenge 6
1. The Specific Art on Which the Challenge Is Based 6
2. Statutory Grounds on Which the Challenge Is Based 7
V. '533 PATENT AND PROSECUTION HISTORY 7
A. '533 7
B. Prosecution History 9
VI. §325(d) AND §314(a) DISCRETION DOES NOT APPLY 11
A. §325(d) 11
B. §314(a) 13
VII. LEVEL OF ORDINARY SKILL IN THE ART 15
VIII. CLAIM CONSTRUCTION 16
A. Board's Constructions in Prior '533-IPR 17
B. District Court Constructions 18
IX. GROUNDS OF UNPATENTABILITY 18
A. Collateral Estoppel Applies to the Independent Claims Upon Which All Challenged Claims Depend 19
B. Ground 1: Lisogurski (claims 6, 12, 14) 21
1. Overview of Lisogurski (Ex. 1025) 21
2. Motivation to Modify Lisogurski 28
3. Independent claims 5 and 13 (cancelled) 30

4. Dependent Claims 6, 12, and 14 41

C. Ground 2: Lisogurski in view of Carlson (Ex. 1028) (Claims 6, 11-12, 14, 18) 45

1. Overview of Carlson 45

2. Motivation to Combine Lisogurski and Carlson 48

3. Independent Claims 5 and 13 (cancelled) 53

4. Dependent Claims 6, 12, 14 56

5. Claims 11/18 57

D. Grounds 3-4: Lisogurski (alone or in view of Carlson) in further view of Tam (Claims 6, 14) 62

1. Independent Claims 5 and 13 (cancelled) 62

2. Claim 6 62

3. Claim 14 65

X. SECONDARY CONSIDERATIONS 65

XI. CONCLUSION 66

EXHIBIT LIST

Exhibit No.	DESCRIPTION
1001	U.S. Patent No. 9,651,533 ("'533")
1002	File History of U.S. Application No. 14/875,709 ("'533FH")
1003	Declaration of Brian Anthony in Support of Petition for *Inter Partes* Review of U.S. Patent No. 9,651,533 ("Anthony")
1004	Declaration of Brian Anthony in Support of Petition for *Inter Partes* Review of U.S. Patent No. 9,651,533 submitted in IPR2019-00916, Ex. 1003 ("'533-Anthony")
1005	*Apple Inc. v. Omni Medsci, Inc.*, No. IPR2019-00916, Paper 1 (P.T.A.B. Apr. 10, 2019) ("'533-Pet.")
1006	*Apple Inc. v. Omni Medsci, Inc.,* No. IPR2019-00916, Paper 23 (P.T.A.B. Jan. 31, 2020) ("'533-POR")
1007	*Apple Inc. v. Omni Medsci, Inc.,* No. IPR2019-00916, Paper 16 (P.T.A.B. Oct. 18, 2019) ("'533-Inst.")
1008	*Apple Inc. v. Omni Medsci, Inc.*, No. IPR2019-00916, Paper 39 (P.T.A.B. Oct. 14, 2020) ("'533-FWD")
1009	*Omni MedSci, Inc. v. Apple Inc.*, No. 21-01229, ECF 69 (Fed. Cir. June 8, 2022)
1010-1017	Reserved
1018	*Omni MedSci, Inc. v. Apple Inc.*, 2:18-cv-00134-RWS, Dkt. No. 211 (E.D. Tex. June 24, 2019)
1019	*Omni MedSci, Inc. v. Apple Inc.*, 2:18-cv-00429-RWS, Dkt. No. 152 (E.D. Tex. Aug. 14, 2019)
1020	Second Amended Docket Control Order, June 16, 2025. *Omni MedSci, Inc. v. Samsung Electronics Co., Ltd. et al.*, No. 2:24-cv-01070-JRG-RSP (E.D. Tex.)
1021-1022	Reserved
1023	Defendants' Supplemental Invalidity and Subject Matter Eligibility Contentions, July 18, 2025. *Omni MedSci, Inc. v. Samsung Electronics Co.*, Ltd. et al., No. 2:24-cv-01070-JRG-RSP (E.D. Tex.)
1024	Reserved

Exhibit No.	DESCRIPTION
1025	U.S. Patent No. 9,241,676 ("Lisogurski")
1026-1027	Reserved
1028	U.S. Patent Pub. No. 2005/0049468 ("Carlson")
1029	Reserved
1030	U.S. Patent No. 7,029,628 ("Tam")
1031	U.S. Patent No. 8,050,730 ("Zhang")
1032	Reserved
1033	U.S. Patent Pub. No. 2011/0237911 ("Lamego")
1034	U.S. Patent No. 5,942,749 ("Takeuchi")
1035	U.S. Patent No. 5,822,473 ("Magel")
1036	US Patent 5,592,124 ("Mullins")
1037	E.F. Schubert, Light-Emitting Diodes (Cambridge Univ. Press, 2nd ed. reprinted 2014)
1038	"The Biomedical Engineering Handbook," by Joseph D. Bronzino (1995)
1039-1058	Reserved
1059	U.S. Patent No. 5,497,769 ("Gratton")
1060	U.S. Patent No. 5,827,182 ("Raley")
1061	U.S. Patent No. 7,764,982 ("Dalke")
1062-1070	Reserved
1071	U.S. Patent No 7,005,679 ("Tarsa")
1072	U.S. Patent Publication No. 2010/0249550 ("Lovejoy")

Exhibit No.	DESCRIPTION
1073	U.S. Patent Publication No. 2015/0057511 ("Basu")
1074	U.S. Patent Publication No. 2013/0327966 ("Fidler")
1075	U.S. Patent Publication No. 2011/0267688 ("Kleppe")
1076	U.S. Patent Publication No. 2005/0133691 ("Doppke")
1077	U.S. Patent Publication No. 2006/0184040 ("Keller")
1078	Reserved
1079	U.S. Patent No. 6,339.715 ("Bahr")
1080	U.S. Patent No. 8,417,307 ("Presura")
1081-1083	Reserved
1084	Declaration of Jonathan Bradford in Support of Petition for *Inter Partes* Review of U.S. Patent No. 9,651,533
1085	*Apple Inc. v. Omni Medsci, Inc.,* No. IPR2019-00916, Paper 10 (P.T.A.B. Jul. 22, 2019) ("'533-POPR")

TABLE OF ABBREVIATIONS

Abbreviation	DESCRIPTION
Claims / Challenged Claims	Claims 6, 11-12, 14, and 18 of the ’533
IPR	*Inter Partes* Review
Petitioners	Petitioners Samsung Electronics Co. Ltd., Samsung Electronics America Inc., Fossil Group, Inc., Fossil Stores I, Inc., Fossil Partners, L.P., Oura Health Oy, and OnePlus Technology (Shenzhen) Co., Ltd.
PO	Patent Owner
POSITA	Person of Ordinary Skill in the Art
Board	Patent Trial and Appeal Board
EDTX	Eastern District of Texas
Texas Case	*Omni MedSci, Inc. v. Samsung Electronics Co., Ltd. et al.*, No. 2:24-cv-01070-JRG-RSP (E.D. Tex.)
’533-IPR	*Apple Inc. v. Omni Medsci, Inc.*, No. IPR2019-00916 (P.T.A.B.)
Related EDTX Cases	*Omni MedSci, Inc. v. Apple Inc.*, 2:18-cv-00134-RWS (E.D. Tex.) *Omni MedSci, Inc. v. Apple Inc.*, 2:18-cv-00429-RWS (E.D. Tex.)

LIST OF CHALLENGED CLAIMS[1]

[5.pre] A measurement system comprising:

[5.a] a light source comprising a plurality of semiconductor sources that are light emitting diodes, the light emitting diodes configured to generate an output optical beam with one or more optical wavelengths, wherein at least a portion of the one or more optical wavelengths is a near-infrared wavelength between 700 nanometers and 2500 nanometers,

[5.b] the light source configured to increase signal-to-noise ratio by increasing a light intensity from at least one of the plurality of semiconductor sources and by increasing a pulse rate of at least one of the plurality of semiconductor sources;

[5.c] an apparatus comprising a plurality of lenses configured to receive a portion of the output optical beam and to deliver an analysis output beam to a sample

[5.d] a receiver configured to receive and process at least a portion of the analysis output beam reflected or transmitted from the sample and to generate an output signal, wherein the receiver is configured to be synchronized to the light source;

---

[1] Though independent claims 5 and 13 have been cancelled and are thus not challenged here, they are included for context because the Challenged Claims depend from them.

[5.e] a personal device comprising a wireless receiver, a wireless transmitter, a display, a microphone, a speaker, one or more buttons or knobs, a microprocessor and a touch screen, the personal device configured to receive and process at least a portion of the output signal, wherein the personal device is configured to store and display the processed output signal, and wherein at least a portion of the processed output signal is configured to be transmitted over a wireless transmission link; and

[5.f] a remote device configured to receive over the wireless transmission link an output status comprising the at least a portion of the processed output signal, to process the received output status to generate processed data and to store the processed data.

[6] The system of claim 5, wherein at least one of the light emitting diodes emits light with a bandwidth between 20 nanometers to 40 nanometers.

[11] The system of claim 5, wherein the receiver further comprises one or more filters in front of one of more detectors to select a fraction of the one or more optical wavelengths.

[12] The system of claim 5, wherein the output optical beam comprises a plurality of optical wavelengths, and the output signal is generated in part by comparing signals at different optical wavelengths.

[13.pre] A measurement system comprising:

[13.a] a wearable measurement device for measuring one or more

physiological parameters, including a light source comprising a plurality of semiconductor sources that are light emitting diodes, the light emitting diodes configured to generate an output optical beam with one or more optical wavelengths, wherein at least a portion of the one or more optical wavelengths is a near-infrared wavelength between 700 nanometers and 2500 nanometers,

[13.b] the light source configured to increase signal-to-noise ratio by increasing a light intensity from at least one of the plurality of semiconductor sources and by increasing a pulse rate of at least one of the plurality of semiconductor sources; the wearable measurement device comprising a plurality of lenses configured to receive a portion of the output optical beam and to deliver an analysis output beam to a sample;

[13.c] the wearable measurement device further comprising a receiver configured to receive and process at least a portion of the analysis output beam reflected or transmitted from the sample and to generate an output signal, wherein the wearable measurement device receiver is configured to be synchronized to pulses of the light source;

[13.d] a personal device comprising a wireless receiver, a wireless transmitter, a display, a microphone, a speaker, one or more buttons or knobs, a microprocessor and a touch screen, the personal device configured to receive and process at least a portion of the output signal, wherein the personal device is configured to store and

display the processed output signal, and wherein at least a portion of the processed output signal is configured to be transmitted over a wireless transmission link; and

[13.e] a remote device configured to receive over the wireless transmission link an output status comprising the at least a portion of the processed output signal, to process the received output status to generate processed data and to store the processed data, and wherein the remote device is capable of storing a history of at least a portion of the received output status over a specified period of time.

[14] The system of claim 13, wherein at least one of the light emitting diodes emits light with a bandwidth between approximately 20 nanometers to approximately 40 nanometers.

[18] The system of claim 13, wherein the receiver further comprises one or more filters in front of one of more detectors to select a fraction of the one or more optical wavelengths.

Pursuant to §§311-319 and §42.1,[2] Samsung Electronics Co. Ltd., Samsung Electronics America Inc., Fossil Group, Inc., Fossil Stores I, Inc., Fossil Partners, L.P., Oura Health Oy, and OnePlus Technology (Shenzhen) Co., Ltd. ("Petitioners" or "Samsung") respectfully petition for *inter partes* review of claims 6, 11-12, 14, 18 ("Challenged Claims or Claims") of U.S. Patent No. 9,651,533 (Ex. 1001, "'533"). There is a reasonable likelihood—and it is highly likely—that at least one challenged claim is unpatentable as explained herein. Petitioners request review of the Claims and judgment finding them unpatentable under §103.

I. INTRODUCTION

Independent claims 5 and 13—from which all Challenged Claims 6, 11-12, 14, and 18 depend—have already been cancelled. Those claims, in addition to others not challenged here, were found to be unpatentable by the Patent Trial and Appeal Board ("Board") in a prior IPR filed by a different petitioner (IPR2019-00916 or "'533-IPR") based on at least two alternative obviousness grounds: 1) **Lisogurski** alone, and 2) **Lisogurski** in view of **Carlson**. Ex. 1008 ("'533-FWD"), 25-43. And

[2] Section cites are to 35 U.S.C. or 37 C.F.R. as context indicates. All emphasis/annotations added unless noted. Figure annotations herein generally quote the Claims for reference. Citations herein are exemplary and not meant to be limiting.

that decision was affirmed by the Federal Circuit. Ex. 1009.

Though the Challenged Claims were not challenged in the prior '533-IPR, they are dependent claims that merely add features already disclosed in **Lisogurski** and **Carlson**, and thus are likewise unpatentable. *See generally* §§IX.B-D. And, as prosecution of the '533 further confirms, these dependent features were well-known in the art—the Challenged Claims recite a known bandwidth range for light emitting diodes ("LEDs") (claims 6, 14), a known way to select certain wavelengths through the use of a conventional filter (claims 11, 18), and a known technique that compares signals at different optical wavelengths (claim 12). *See generally* §§V.B, IX.B-D. Ex. 1003 ("Anthony"), ¶¶70-199.

Accordingly, Petitioners request that the Board institute trial and find the Claims unpatentable.

II. MANDATORY NOTICES UNDER 37 C.F.R. §42.8

A. Real Party-in-Interest

Petitioners Samsung Electronics Co. Ltd., Samsung Electronics America, Inc., Fossil Group, Inc., Fossil Stores I, Inc., Fossil Partners, L.P., Oura Health Oy, and OnePlus Technology (Shenzhen) Co., Ltd., in addition to Ouraring, Inc. and Guangdong OPPO Mobile Telecommunications Corp., Ltd., are the real parties-in-interest. No other party had access to or control over the present Petition, and no other party funded or participated in preparation of the present Petition.

B. Related Matters

The ’533 is the subject of the following co-pending civil actions:

Omni Medsci, Inc. v. Samsung Electronics Co. Ltd. et al., 2:24-cv-01070-JRG-RSP (E.D. Tex) (“Texas Case”); and

Omni MedSci, Inc. v. Whoop, Inc., 1:25-cv-00140-JLH (D. Del.).

U.S. Patent No. 10,517,484 (“’484”), which is related to the ’533, is also subject to the following appeal: *Omni Medsci, Inc. v. Apple, Inc.*, No. 25-1646 (Fed. Cir.).

Petitioners are concurrently filing petitions for IPR of the related U.S. Patent Nos. 11,160,455 (IPR2025-01252), 10,874,304 (IPR2025-01251), 12,193,790 (IPR2025-01253), and 12,268,475 (IPR2025-01254), and petitions for Post Grant Review (PGR) of the related U.S. Patent Nos. 12,268,475 (PGR2025-00063) and 12,193,790 (PGR2025-00064). Petitioners are further concurrently filing a petition for IPR of U.S. Patent No. 9,055,868 (IPR2025-01249) asserted in the Texas Case.

C. Lead and Back-Up Counsel

Lead Counsel	Backup Counsel
James L. Davis, Jr. Reg. No. 57,325 **ROPES & GRAY LLP** 525 University Avenue, 8th Floor Palo Alto, CA 94301 Phone: +1-650-617-4000 Fax: +1-617-235-9492 james.l.davis@ropesgray.com Samsung-Omni-Ropes-IPR-Service@ropesgray.com **Mailing address for all PTAB correspondence:** ROPES & GRAY LLP IPRM—Floor 43 Prudential Tower 800 Boylston Street Boston, Massachusetts 02199-3600	Hyun-Joong Kim Reg. No. 79,936 **ROPES & GRAY LLP** 1211 Avenue of the Americas New York, NY 10036 Phone: +1 212-596-9000 Fax: +1-617-235-9492 Daniel.Kim@ropesgray.com Fan (Frances) Zhang Reg. No. 73,589 **ROPES & GRAY LLP** 2099 Pennsylvania Avenue, N.W. Washington, DC 20006-6807 Phone: +1-202-508-4600 Fax: +1-617-235-9492 frances.zhang@ropesgray.com
	Jasjit S. Vidwan Reg. No. 72,080 **MAYER BROWN LLP** 1999 K Street, NW Washington, DC 20006-1101 Tel.: 202.263.3065 JVidwan@mayerbrown.com Robert G. Pluta Reg. No. 50,970 **MAYER BROWN LLP** 71 S. Wacker Drive Chicago, IL 60606 Tel.: 312.701.8641 RPluta@mayerbrown.com

Lead Counsel	Backup Counsel
	Jared A. Smith Reg. No. 73,749 **FISH & RICHARDSON P.C.** 12860 El Camino Real, Suite 400 San Diego, CA 92130 Phone: +1 858-678-4702 Fax: +1 858-678-5099 jasmith@fr.com Ricardo J. Bonilla Reg. No. 65,190 **FISH & RICHARDSON P.C.** 1717 Main Street, Suite 5000 Dallas, TX 75201 Phone: +1 214-760-6150 Fax: +1 214-747-2091 rbonilla@fr.com
	Jack Shaw Reg. No. 72,262 **CHERRY JOHNSON SIEGMUND JAMES PC** 8140 Walnut Hill Lane, Suite 105 Dallas, Texas 75231 Tel: 254-732-2242 Fax: 866-627-3509 jshaw@cjsjlaw.com

Petitioners consent to electronic service of documents to the email addresses identified above.

III. PAYMENT OF FEES

The undersigned authorizes the Office to charge the fee required by §42.15(a) and any additional fees that might be due to Deposit Account No. 18-1945, under Order No. 110797-0060-652.

IV. REQUIREMENTS FOR *INTER PARTES* REVIEW

A. Grounds for Standing

Pursuant to §42.104(a), Petitioners certify that the '533 is available for IPR. Petitioners and any real parties-in-interest are not barred or estopped from requesting an IPR challenging the Claims on the grounds identified herein.

B. Identification of Challenge

Pursuant to §§42.104(b) and (b)(1), Petitioners request IPR of the Claims and that the Board cancel the same as unpatentable.

1. The Specific Art on Which the Challenge Is Based

Petitioners rely upon the following art (Anthony, ¶¶70-75):

Name	Ex.	Publication	Filed	Published/ Issued	Prior art under at least
Lisogurski	1025	US 9,241,676	5/31/2012	1/26/2016	§102(e)
Carlson	1028	US 2005/0049468	9/3/2003	3/3/2005	§102(b)
Tam	1030	US 7,029,628	12/28/2000	4/18/2006	§102(b)

Each of the above references is prior art to the Claims based on 12/31/2012, the earliest provisional application priority date listed in the '533's earliest priority

claim. [3]

2. Statutory Grounds on Which the Challenge Is Based

Ground	Claim(s)	Basis	References
1	6, 12, 14	§103	**Lisogurski**
2	6, 11-12, 14, 18		**Lisogurski** in view of **Carlson**
3	6, 14		**Lisogurski** in view of **Tam**
4	6, 14		**Lisogurski** in view of **Carlson** in further view of **Tam**

V. '533 PATENT AND PROSECUTION HISTORY

A. '533

'533 Figure 24 shows an embodiment of the physiological measurement system:

[3] If AIA applies, these references are prior art under §102(a)(1) and/or §102(a)(2) for the same reason. Anthony, ¶¶4-8, 55-58. Petitioners take no position as to the appropriate priority date of the '533.

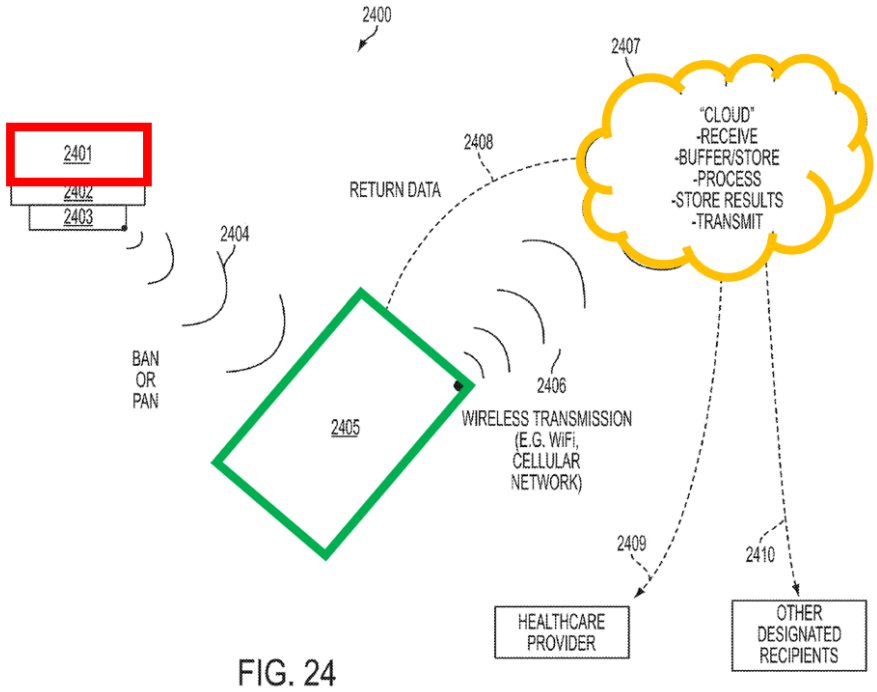

FIG. 24

'533, 26:49-28:15, Fig. 24 (annotated). Anthony, ¶44.

The physiological measurement system includes **a wearable measurement device 2401** that communicates physiological data measurements over link 2404 to **a personal device 2405**, such as a smart phone or tablet. '533, 26:49-27:2. **Personal device 2405** communicates some or all of its processed physiological data over a wireless transmission link 2406 to a **remote device 2407**, such as a cloud-based server, which can augment the data with additional value-added processing, e.g., storing and processing the physiological data. '533, 26:49-27:33. Anthony, ¶45.

The **wearable measurement device 2401** includes **a light source** that comprises a plurality of semiconductor sources, such as light emitting diodes that generate an optical beam with one or more wavelengths, typically having a

bandwidth of between 20 and 40 nm. '533, 5:37-41, 20:2-4. The light source improves its signal-to-noise ratio by increasing the light intensity or the pulse rate of at least one of the semiconductor sources. '533, 5:43-47. The **wearable measurement device** further comprises **lenses** configured to receive and direct light from the semiconductor sources to a sample, such as a user's tissue, and a **receiver** that receives the light reflected from the tissue sample and generates an output signal. '533, 5:47-54, 17:44-64. An output signal is generated by comparing different wavelengths of the light reflected from the tissue or sample. '533, 8:29-34. The receiver further includes a **detector** to detect and measure the light received from the sample. *See generally,* '533, 17:44-64. Filters in front of the detector select wavelengths or bands to be measured. '533, 17:50-56. Anthony, ¶46.

B. Prosecution History

The '533 issued from U.S. Pat. App. 14/875,709 ("'709-App."), filed on 10/6/2015. During prosecution, Applicant amended the claims to additionally recite the dependent limitations of all Challenged Claims to overcome prior art. Ex. 1002 ("'533FH"), 501-502, 504-507. But the Examiner found that these amended limitations were disclosed by prior art. '533FH, 722-724, 765-766. Anthony, ¶¶47-49.

In particular, with respect to **Challenged Claims 6 and 14** (then-pending claims 7 and 16), which recite "**wherein at least one of the light emitting diodes**

emits light with a bandwidth between 20 nanometers to 40 nanometers" ('533FH, 501, 503), the Examiner found that this limitation was taught by U.S. Publication No. 2013/0327966 (Fidler)'s (Ex. 1074) disclosure of "conventional LEDs [that] have a bandwidth of approximately 30nm, falling between 20nm to 40nm." '533FH, 723. Anthony, ¶50.

With respect to **Challenged Claims 11 and 18** (then-pending claims 12 and 20), which recite "**wherein the receiver further comprises one or more filters in front of one of more detectors to select a fraction of the one or more optical wavelengths**" ('533FH, 502, 504), the Examiner found that this limitation was taught by U.S. Publication No. 2011/0267688 (Kleppe)'s (Ex. 1075) disclosure of "the use of a filter […] in front of a detector." '533FH, 722-723. Anthony, ¶51.

Finally, with respect to **Challenged Claim 12** (then-pending claim 13), which recites "**wherein the output optical beam comprises a plurality of optical wavelengths, and the output signal is generated in part by comparing signals at different optical wavelengths**" ('533FH, 502), the Examiner found that this limitation was taught by U.S. Publication No. 2005/0133691 (Doppke)'s (Ex. 1076) disclosure of "output signals generated in response to a comparison of signals received on the first and second input terminals." '533FH, 724. Anthony, ¶52.

Applicant did not contest these findings, '533FH, 765-766, but instead amended the independent claims to additionally recite the limitation that the receiver

"is configured to be synchronized to the light source." '533FH, 761-762. The claims were then allowed. '533FH, 756, 759-764, 777-785. Anthony, ¶53.

In a subsequent IPR (the '533 IPR), the Board held that all claims challenged in that IPR (including independent claims 5 and 13) were unpatentable based on the prior art references relied upon here, and the Federal Circuit affirmed that holding on appeal. *See infra* §§IX.B.3 and IX.C.3. Anthony, ¶54.

VI. §325(D) AND §314(A) DISCRETION DOES NOT APPLY

A. §325(d)

Under the *Advanced Bionics* framework, there is no basis for discretionary denial under §325(d) as **the grounds raised by this Petition are not the same or substantially the same as the art and arguments raised during prosecution of the '533**. *Advanced Bionics, LLC v. MED-EL Elektromedizinische Geräte GmbH*, IPR2019-01469, Paper 6 at 8 (P.T.A.B. Feb. 13, 2020) (precedential). The Examiner did not consider the references relied upon in this Petition—**Lisogurski**, **Carlson**, and **Tam**. *See generally* '533FH. Though **Tam** discloses the dependent limitation recited in claim 6 ("wherein at least one of the light emitting diodes emits light with a bandwidth between 20 nanometers to 40 nanometers"), just like what the Examiner found to be disclosed in Fidler during prosecution ('533FH, 723, *see* §V.B), **Tam** was never considered in combination with **Lisogurski** (alone or in combination with **Carlson**), and thus the grounds raised here are not the same or substantially the same

as those raised during prosecution. *See Sony v. MZ Audio Scis., LLC,* IPR2022-01544, Pap. 12, *7 (§325(d) discretion is improper where the "Examiner did not consider the specific combination of references asserted").

Even if the art and arguments were substantially the same, the Examiner erred in a manner material to the patentability of the Claims. Where the "Examiner did not expressly consider" **Lisogurski, Carlson,** and **Tam**, it is difficult, if not impossible to explain "why the Examiner allowed the claims" or "how the Examiner might have considered the arguments presented in the Petition." *Bowtech, Inc. v. MCP IP, LLC*, IPR2019-00379, Pap. 14, *20 (not exercising §325(d) discretion). If the Examiner had considered substantially the same art or arguments, it was error to allow the claims because, *e.g.*, the Examiner failed to reject the Claims over references or combinations of references teaching a light emitting diode that emits light with a bandwidth of 20 to 40 nanometers, a receiver that comprises one or more filters in front of one of more detectors to select a fraction of the one or more optical wavelengths, and an output optical beam that comprises a plurality of optical wavelengths where the output signal is generated in part by comparing signals at different optical wavelengths. *See* §§IX.B-D. Indeed, the Board in the '533-IPR found unpatentable independent claims 5 and 13 (upon which the Challenged Claims depend) based on **Lisogurski** and **Carlson**, as applied herein (see §§IX.B-D (citing prior FWDs)).

The Board should not deny institution under §325(d).

B. §314(a)

The Texas Case does not warrant exercising discretion under §314(a).

Factor 1 weighs in favor of institution. Petitioners intend to seek a stay of the Texas Case pending the outcome of this IPR, along with other IPRs related to the litigation dispute. At the time of institution, it is highly unlikely that the Court will have conducted a *Markman* hearing, which is currently scheduled for 2/13/2026. Ex.1020, 4. The Eastern District of Texas (EDTX) has routinely granted stays prior to claim construction, since cases have "not reached such an advanced stage that it would weigh against a stay." *Broadphone LLC v. Samsung Elecs. Co.*, No. 2:23-CV-00001-JRG-RSP, 2024 WL 3524022, at *2-3 (E.D. Tex. July 24, 2024).

While ***Factors 2 and 3*** are neutral or at most weigh slightly against institution, they deserve little weight given Petitioners' diligence in preparing and filing this Petition.

Factor 4 weighs strongly in favor of institution. Petitioners hereby stipulate that, if the PTAB institutes this IPR, Petitioners will not pursue in the Texas Case (1) the specific grounds asserted in this IPR or any ground that was raised or could have been raised in an IPR against the Challenged Claims; or (2) combinations of the prior art asserted in this IPR with any other type of prior art against the Challenged Claims.

Factor 5 is neutral or weighs at most only slightly against institution. While Petitioners and PO are the same parties in the Texas Case, institution and a public trial record of the important invalidity grounds in the Petition will reduce issues for the public, including all parties besides Petitioners who currently are or may in the future be subject to litigation involving the '533.

Factor 6 weighs strongly in favor of institution. It is an efficient use of Board resources to address the unpatentability of the Claims challenged here. In the prior '533 IPR challenging claims of the same patent, the Board found independent claims 5 and 13, upon which all Challenged Claims depend, unpatentable as obvious based on the same prior art combinations set forth here. *See Embody, Inc. and Zimmer Biomet Holdings, Inc. v. Lifenet Health,* IPR2025-00248, Paper 13 at 2-3 (P.T.A.B. June 26, 2025) ("it is an efficient use of Board resources to address the related patent"); *Posco Co., Ltd. v. Arcelormittal,* IPR2025-00370, Paper 10 at 3 (P.T.A.B. June 25, 2025) (The Board's prior unpatentability decision on related patents "tips the balance against discretionary denial."); *Tesla, Inc., v. Intellectual Ventures II LLC*, IPR2025-00217, Paper 9 at 2 (P.T.A.B. June 13, 2025). The Challenged Claims here (which were not challenged in the prior '533 IPR) merely recite additional well-known limitations disclosed by the same references previously relied upon by the Board in the prior '533 IPR. *See* §IX.B-D. Indeed, the Examiner's uncontested findings during prosecution of the '533 confirms the well-known nature

of those additional limitations. *See* §V.B.

PO is also collaterally estopped from relitigating the patentability of those cancelled independent claims upon which the Challenged Claims depend, and the Board is uniquely positioned to address the issue of collateral estoppel based on the '533 IPR. *ParkerVision, Inc. v. Qualcomm Inc.*, 116 F.4th 1345, 1362 (Fed. Cir. 2024); *Samsung Elecs. Co., Ltd. v. Netlist, Inc.*, IPR2025-00002, Paper 17 at 17-24 (P.T.A.B. May 17, 2025).

PO also has not developed settled expectations. All claims challenged in the prior '533 IPR were held unpatentable by the Board in 2020, and cancelled in 2022, thus upsetting any expectation that the remaining unchallenged claims were valid and enforceable.

Accordingly, the Board should not exercise its discretion to deny institution.

VII. LEVEL OF ORDINARY SKILL IN THE ART

As the Board concluded and PO did not dispute in the '533-IPR, on or before the claimed priority date of 12/31/2012, a person of ordinary skill in the art ("POSITA") "would have [had] a good working knowledge of optical sensing techniques and their applications, and familiarity with optical system design and signal processing techniques." '533-FWD, 8-9. A POSITA would have obtained such knowledge through "an undergraduate education in engineering (electrical, mechanical, biomedical, or optical) or a related field of study, along with relevant

experience studying or developing physiological monitoring devices…in industry or academia." '533-FWD, 8-9. Anthony, ¶¶55-58.

VIII. CLAIM CONSTRUCTION

Claim terms subject to IPR are to be construed according to the *Phillips* standard applied in district court. §42.100(b). Only terms necessary to resolve the controversy must be construed. Because the prior art asserted herein discloses embodiments within the Claims' indisputable scope, the Board need not construe the Claims' outer bounds.[4] Other than noted here, all claim terms should be construed according to their plain and ordinary meaning as they would have been understood by a POSITA. Anthony, ¶59.

In the prior '533-IPR and district court proceedings involving patents related to the '533—*Omni MedSci, Inc. v. Apple Inc.*, 2:18-cv-00134 (E.D. Tex.), and *Omni MedSci, Inc. v. Apple Inc.*, 2:18-cv-00429 (E.D. Tex.) ("Related EDTX Cases"), certain terms identical to or substantially similar to language in the Claims here were construed, as detailed below. Though Petitioners do not believe that those terms

[4] In the Texas Case, Defendants identified certain limitations of the '533 as potentially indefinite. Ex. 1023, 230-231. Regardless of the outer bounds of these limitations, the prior art discloses and renders obvious the indisputable scope of these limitations. *See* §§IX.B-IX.C. Anthony, ¶¶68-69, 117-118, 132-133, 189-190.

need to be construed here, the prior art discloses and renders obvious those terms, including under those prior constructions, as discussed in §§IX.B-D, *infra*. Anthony, ¶¶59-60.

A. Board's Constructions in Prior '533-IPR

In the '533-FWD, the Board construed multiple terms appearing in independent claims 5 and 13 upon which the Challenged Claims depend. For example, the Board construed "**personal device**" (*e.g.*, [5.e] and [13.d]) as "a computer or microprocessor-based device having a wireless receiver, a wireless transmitter, a display, a microphone, a speaker, one or more buttons or knobs, a microprocessor, and a touch screen." '533-FWD, 10. The Board also construed "**a light source comprising a plurality of semiconductor sources that are light emitting diodes…configured to increase signal-to-noise ratio by…increasing a pulse rate of at least one of the plurality of semiconductor sources**" (*e.g.*, [5.a]-[5.b] and [13.a]-[13.b]) as "a light source containing two or more light emitting diodes (semiconductor sources), wherein at least one of the light emitting diodes is capable of having its pulse rate increased to increase a signal-to-noise ratio." '533-FWD, 10-12. Anthony, ¶60.

The Board also considered constructions proposed for the terms **"beam," "plurality of lenses,"** and **"pulse rate,"** but declined to construe these terms as "not needed to resolve any dispute between the parties." '533-FWD, 9-10. Anthony,

¶¶61-64.

B. District Court Constructions

Prior to the Board's '533-FWD, in two Eastern District of Texas cases involving the '533 and related patents that share substantially similar specifications as the Related EDTX Cases, the term **"beam"** was construed as "photons or light transmitted to a particular location in space." *See* Ex. 1018 ("CC Order"), 7-9 (construing "beam" in claims 5 and 13 of '533); Ex. 1019, 10-12 (construing "beam" in related patents). Though Patent Owner (PO) Omni subsequently raised this construction in its POPR in the '533-IPR, the Board nevertheless concluded that no construction of "beam" was necessary. '533-POPR, 10-11; '533-Inst., 9; '533-FWD, 9-10. Anthony, ¶65. Additionally, the district court determined that the term "**lenses**" should be given its "plain and ordinary meaning without the need for further construction." Ex. 1018 (CC Order), 10-13 (construing "plurality of lenses" in claims 5 and 13 of the '533); *see also* Ex. 1019, 12-15 (construing "lens" and "one or more lenses" in related patents). Consistent with the district courts in the Related EDTX Cases, the Board similarly determined that construction of "**lenses**" was unnecessary in its '533-FWD. '533-FWD, 9-10. Anthony, ¶¶66-67.

IX. GROUNDS OF UNPATENTABILITY

As explained below, the Claims are unpatentable as obvious. This Petition is supported by the Declaration of Brian Anthony, which describes the prior art's scope

and content at the time of the ’533. Anthony, ¶¶1-206.

A. Collateral Estoppel Applies to the Independent Claims Upon Which All Challenged Claims Depend

The Board already found independent claims 5 and 13—from which all Challenged Claims depend—to be unpatentable in the prior ’533 IPR based on the same prior art combinations applied herein. ’533-FWD, 25-43. Thus, it is an efficient use of the Board’s resources to address the unpatentability of the dependent claims of those now-cancelled independent claims in this IPR.

Specifically, the Board determined that various claims of the ’533, including independent claims 5 and 13 upon which all Claims challenged here depend, were unpatentable based on two alternative obviousness grounds: 1) **Lisogurski** alone, and 2) **Lisogurski** in view of **Carlson**. ’533-FWD, 25-43. As a result of the Board’s unpatentability decision, and the Federal Circuit’s summary affirmance of that decision, claims 5 and 13 are now cancelled and their unpatentability cannot be relitigated. Ex. 1009. Collateral estoppel applies to all Challenged Claims to the extent they rely on independent claims 5 and 13 and any terms therein (e.g., for antecedent basis in the dependent claims).

First, independent claims 5 and 13 were already found unpatentable by the Board in the prior ’533 IPR against PO based on **Lisogurski** alone or in view

Carlson. *See* '533-FWD, 25-43, 51.[5] *Google LLC v. Hammond Dev. Int'l*, 54 F.4th 1377, 1381-82 (2022) (applying collateral estoppel to uphold unpatentability of certain unchallenged claims where they used "slightly different language to describe substantively the same invention" as claims already held unpatentable by the Board in a related IPR); *Samsung Elecs. Co., Ltd. v. Netlist, Inc.*, IPR2025-00002, Paper 17 at 17-24 (P.T.A.B. May 17, 2025) ("Patent Owner is collaterally estopped" as to obviousness of all challenged claims, based on FWDs relying on the same ground to find "substantially similar" limitations in related patents obvious).

Second, these limitations were actually litigated in the prior '533 IPR. *Google*, 54 F.4th at 1381-82; '533-FWD, 25-42, 51; '533-Pet., 3, 21-57; '533-POR, 13-32.

Third, the Board's findings with respect to these limitations were essential to the Board's FWD, which were final judgments because they were affirmed by the Federal Circuit or not appealed. *United Therapeutics Corp. v. Liquidia Techs., Inc.*, 74 F.4th 1360, 1372 (Fed. Cir. 2023).

Fourth, PO here (Omni) was the same PO who defended against the prior

[5] To meet these independent claims, the Board relied on the same embodiments of **Lisogurski** in the '533-FWD, as does this Petition. *See* §§IX.B-IX.D. Anthony, ¶10.

'533-IPR and thus had a full and fair opportunity to litigate the patentability of these limitations in the prior IPRs. *Google*, 54 F.4th at 1381-82. PO is thus collaterally estopped from relitigating the unpatentability determinations of independent claims 5 and 13, from which the Challenged Claims depend. Anthony, ¶¶110-135, 172-179.

B. Ground 1: Lisogurski (claims 6, 12, 14)

1. Overview of Lisogurski (Ex. 1025)

Lisogurski discloses a "medical device," specifically a "physiological monitoring system [that] monitor[s] one or more physiological parameters of a patient[by] … using one or more physiological sensors." Lisogurski, 3:44-46, 4:3-5. Such sensors may include a pulse oximeter with a light sensor placed on a patient's fingertip, toe, forehead, or earlobe. Lisogurski, 4:6-7; *see also* '533-FWD, 12-13. Anthony, ¶76.

Lisogurski Figure 1 is reproduced below.

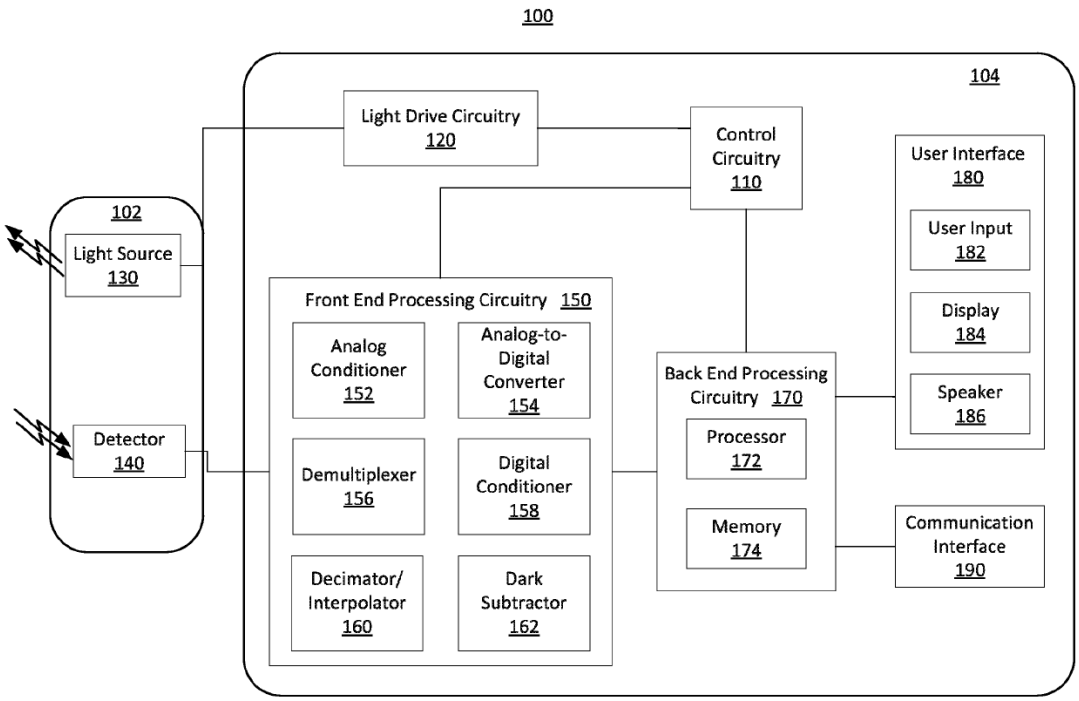

FIG. 1

Figure 1 is a "block diagram of an illustrative physiological monitoring system in accordance with some embodiments of the present disclosure." Lisogurski, 2:11-13. The system includes "sensor 102," which has "light source 130 and detector 140," and "monitor 104" for "generating and processing physiological signals of a subject." Lisogurski, 10:44-49. Light source 130 "emit[s] photonic signals having one or more wavelengths of light," including red light and IR light, "into a subject's tissue." Lisogurski, 10:49-52. "[L]ight source 130 may include a Red light emitting light source and an IR light emitting light source, e.g., Red and IR light emitting diodes (LEDs)." Lisogurski, 10:52-56. The "Red wavelength" is "between 600 nm and about 700 nm" and the "IR wavelength" is "between about 800 nm and about

1000 nm." Lisogurski, 4:42-45, 7:38-8:3, 10:48-52, 10:52-11:8, 17:37-45, 19:25-31, Figs. 1, 3. Spatially separated detectors 140 "detect the intensity of light," for example, "the intensity of light at the Red and IR wavelengths," after the light "pass[es] through the subject's tissue." Lisogurski, 11:9-14. After detectors 140 receive the light, they then "convert[ ]" them to an electrical signal, and "send the detection signal to monitor 104, where the detection signal [is] … processed [to determine] physiological parameters." Lisogurski, 11:14-23. The light that is received by the detectors is "directly related to the absorbance and/or reflectance of light in the issue," such that "when more light at a certain wavelength is absorbed or reflected, less light of that wavelength is received from the tissue by detector[s] 140." Lisogurski, 11:16-20, 17:39-45 ("One or more detector 318 may also be provided in sensor unit 312 for detecting the light that is reflected by or has traveled through the subject's tissue."). *See also* '533-FWD, 14-16. Anthony, ¶¶77-79.

Monitor 104 includes several components, including "user interface 180," "communication interface 190," and various circuitry components, such as "control circuitry 110," "light drive circuitry 120," "front end processing circuitry 150," and "back end processing circuitry 170." Lisogurski, 11:28-32. "Control circuitry 110" controls "light drive circuitry 120." Lisogurski, 11:33-36 (disclosing that control circuitry 110 is "coupled" to light drive circuitry 120 and that it is "configured to control [its] operation"). "Light drive circuitry 120…generate[s] a light drive signal,

which may be used to turn on and off light source 130, based on the timing control signals." Lisogurski, 11:38-54. "Light drive circuitry 120" also controls the intensity of light source 130. Lisogurski, 11:50-54; *see also* '533-FWD, 16. Anthony, ¶80.

Front end processing circuitry 150 (1) operates "synchronously with light drive circuitry 120," (2) "receive[s] a detection signal from detector 140," (3) "processes the output signal of detector 140," (4) provide[s] one or more processed signals to back end processing circuitry 170," and (5) "synchronize[s] the operation of an analog-to-digital converter…with the light drive signal based on the timing control signals." Lisogurski, 11:9-10, 11:14-17, 11:20-27, 11:41-46, 12:42-48, 17:40-42, Figs. 1, 3. The processed signals are generated based on a comparison of light signals at different wavelengths, such as red and infrared light. Lisogurski, 4:42-56, 12:42-45, 14:60-62; *see also* '533-FWD, 16. Anthony, ¶81.

"Back end processing circuitry 170" includes "processor 172 and memory 174." Lisogurski, 14:56-57. "[B]ackend processing circuitry 170" "receive[s] and process[es] physiological signals received from front end processing circuitry 150" to "determine one or more physiological parameters based on the received physiological signals." Lisogurski, 14:56-64. Moreover, backend processing circuitry 170 is "communicatively coupled [to] use[r] interface 180 and communication interface 190." Lisogurski, 15:16-18; *see also* '533-FWD, 17.

Lisogurski's backend processing circuitry 170 is consistent with the standard practice supporting user interactions and data integration with other systems. Anthony, ¶82.

User interface 180 includes various components, including "user input 182, display 184, and speaker 186," and may include "a keyboard, a mouse, a touch screen, buttons, switches, [and] a microphone[,]… or any other suitable input device." Lisogurski, 14:64-15:16, 15:19-23, 15:30-35, 27:31-36, Fig. 1; *see also* '533-FWD, 17. Anthony, ¶83.

Communication interface 190 allows "monitor 104 to exchange information with external devices," and includes transmitters and receivers to allow wireless communications. Lisogurski, 15:43-57, 18:11-15, 18:49-65, 26:55-60, Figs. 1, 3; *see also* '533-FWD, 17. Anthony, ¶84.

Lisogurski further discloses that "the components of physiological monitoring system 100 that are shown and described as separate components … for illustrative purposes only" and that: ...(1) "the functionality of some of the components may be combined in a single component" and (2) "the functionality of some of the components...may be divided over multiple components." Lisogurski, 15:66-16:9. **Lisogurski** goes on to explain that: "For example, some or all of the functionality of control circuitry 110 may be performed in front end processing circuitry 150, in back end processing circuitry 170, or both." Lisogurski, 16:9-12.

As another example, "all of the components of physiological monitoring system 100 can be realized in processor circuitry." Lisogurski, 16:14-16; *see also* '533-FWD, 15. Anthony, ¶85.

Lisogurski Figure 3 is reproduced below:

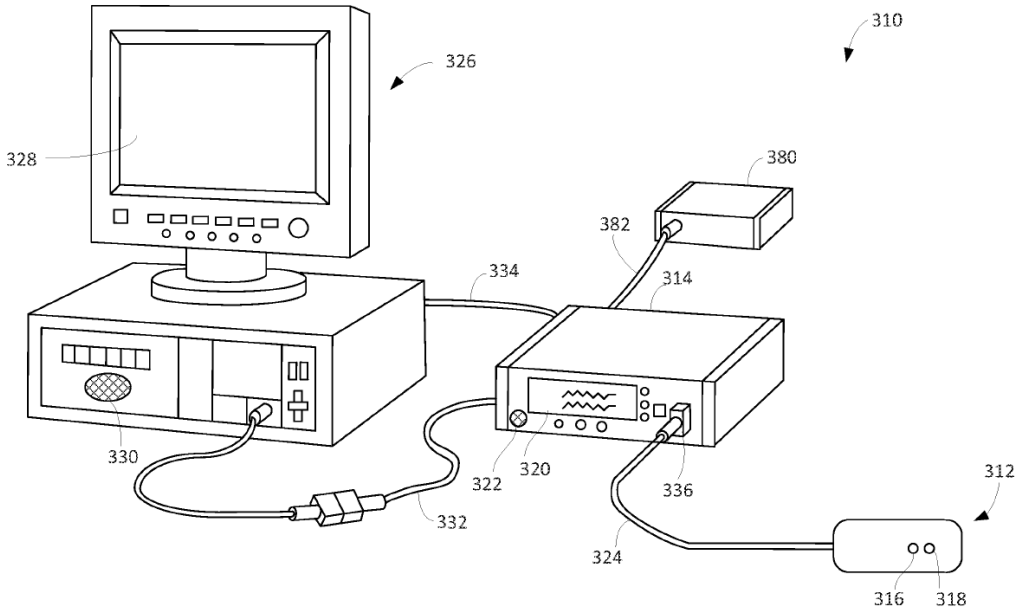

FIG. 3

Lisogurski Figure 3 is "a perspective view of an embodiment of a physiological monitoring system," including sensor 312, monitor 314, and multi-parameter physiological monitor ("MPPM") 326. Lisogurski, 2:23-25, 15:43-48, 17:35-36, 18:44-45, 18:49–56, 18:58–62, Fig. 3. Figure 3's system may include one or more components of Figure 1's system (e.g., monitor 314 may be implemented as monitor

104, sensor unit 312 may be implemented as sensor 102).[6] Lisogurski, 17:30-35, 18:13-14. Sensor 312 and monitor 314 include similar configurations as sensor 102 and monitor 104, respectively. *See* Lisogurski, 17:37-62, 18:3-10, 19:25-27; *see also* '533-FWD, 13-15. Anthony, ¶¶86-88.

Monitor 314 is communicatively coupled to MPPM 326, with which it "may communicate wirelessly," and may also be "coupled to a network to enable the sharing of information with servers or other workstations." Lisogurski, 18:58-65. MPPM 326 may "calculate physiological parameters and...provide a display 328 for information from monitor 314," and may also be "coupled to a network to enable the sharing of information with servers or other workstations." Lisogurski, 18:49-52, 18:62-65, 26:51-60. The remote network servers may "determine physiological parameters," and display the parameters on a remote display, display 320 of monitor 314 , or display 328 of MPPM 326. Lisogurski, 20:53-58. The remote servers may also "publish the data to a server or website," or otherwise "make the parameters available to a user." Lisogurski, 20:8-13, 20:58-60; *see also* '533-FWD, 13-15.

[6] A POSITA would have understood that Figure 3 is an exemplary application of the embodiment shown in Figure 1, and that the disclosures in Figure 3 apply to the corresponding components or features in Figure 1. '533-FWD, 13-15. Anthony, ¶¶87-88.

Anthony, ¶89.

Lisogurski also discloses various methods for improving signal-to-noise ratio including: modulating the light drive signal with a "period the same as or closely related to the period of [a] cardiac cycle," using a dark subtraction process to remove noise from the ambient light, and varying light drive signal including drive current or light brightness, duty cycle, firing rate, and other suitable parameters. Lisogurski, 6:7-19, 9:46-60, 13:60-14:10, 16:33-54, 25:49-55; *see also* '533-FWD, 17. Anthony, ¶¶90-91.

2. Motivation to Modify Lisogurski

As the Board found in the prior '533-IPR, a POSITA would have been motivated to modify **Lisogurski's** physiological monitoring system 100 to "relocat[e] **control circuitry 110**, **light drive circuitry 120**, and **front end processing circuitry 150** of monitor 104 to sensor 102." '533-FWD, 22-25, 37-39 (including annotated Fig. 1 below). Anthony, ¶¶92-93.

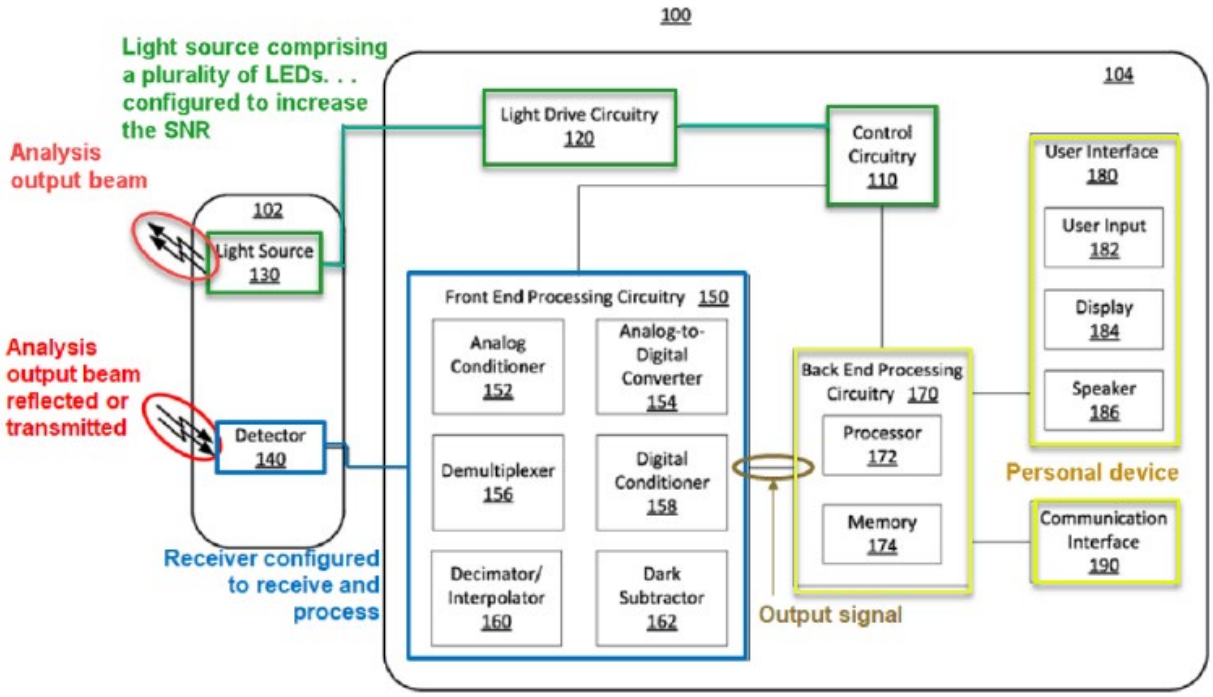

FIG. 1

As the Board found, "Lisogurski expressly suggests the modification by teaching embodiments in which 'the functionality of some of the components may be combined in a single component' and embodiments in which 'the functionality of some of the components of monitor 104…may be divided over multiple components.'" '533-FWD, 23 (quoting Lisogurski, 16:2-4, 16:7-9). As the Board further found, "numerous industry trends motivate the modification," which "include improving the capabilities of wearable sensors for use in sports and personal fitness applications and wireless connecting wearable sensors to networks to remotely monitor patient health." '533-FWD, 23. Anthony, ¶94.

As to the **control circuitry 110** and **light drive circuitry 120**, because they

work together to output the electric current applied to the light source, a POSITA would have understood or at least found it obvious to include the circuitry in the same device as the **light source**. *See* '533-FWD, 23-24 (citing '533-Pet., 32-34). As to the **front end processing circuitry 150**, because it performs analog-to-digital conversion and other initial processing of the signal, the Board also agreed that a POSITA would have understood or at least found it obvious to include it in the sensor where the signal is captured. *See* '533-FWD, 23 (citing '533-Pet., 47-48). Indeed, it was common for **light sources** to include **light drive circuitry and control circuitry**, and for a detector to include a **front end processing circuitry**.[7] "[N]umerous industry trends motivate the modification," which "include improving the capabilities of wearable sensors for use in sports and personal fitness applications and wireless connecting wearable sensors to networks to remotely monitor patient health." '533-FWD, 23. Anthony, ¶¶95-109.

3. Independent claims 5 and 13 (cancelled)

As discussed above (§IX.A), the Board already held that **Lisogurski discloses and renders obvious independent claims 5 and 13** in the prior '533 IPR (from

[7] *E.g.*, Ex. 1036 (Mullins), 11:7-33; Ex. 1034 (Takeuchi), 2:66-4:20, Figs. 7-9; Ex. 1035 (Magel), 3:37-52, Fig. 2; Ex.1031 (Zhang), 14:12-26, Fig. 18; Ex. 1033 (Lamego), [0052], Fig. 4. Anthony, ¶¶103-107.

which all Challenged Claims depend). '533-FWD, 25-43. These limitations are met for at least the reasons identified by the Board, as discussed below. Anthony, ¶¶110-135.

a. The "measurement system" (claims 5, 13) and "wearable measurement device" (claim 13) limitations

Claims 5 and 13 both recite "**[a] measurement system comprising**," and claim 13 further recites "**a wearable measurement device for measuring one or more physiological parameters**." '533, claims 5, 13. Anthony, ¶111.

To meet the aforementioned **"measurement system"** and **"wearable measurement device" limitations**, the Board generally relied on **Lisogurski's** disclosure of a "[physiological monitoring] system 100/310 including sensor 102/312 for measuring blood oxygen saturation." '533-FWD, 25 (citing '533-Pet., 28; Lisogurski, 4:6-20, 17:55-59). Anthony, ¶¶112-113.

b. The "light source" limitations (claims 5, 13)

Claims 5 and 13 both identically recite: 1) "**a light source comprising a plurality of semiconductor sources that are light emitting diodes, the light emitting diodes configured to generate an output optical beam with one or more optical wavelengths, wherein at least a portion of the one or more optical wavelengths is a near-infrared wavelength between 700 nanometers and 2500 nanometers**"; and 2) "**the light source configured to increase signal-to-noise**

ratio by increasing a light intensity from at least one of the plurality of semiconductor sources and by increasing a pulse rate of at least one of the plurality of semiconductor sources." '533, claims 5, 13. Anthony, ¶114.

To meet the aforementioned **"light source" limitations**, the Board generally relied on **Lisogurski's** "light source 130/316" with "multiple LEDs," such as "an LED that emits red light" and "an LED that emits infrared light having a wavelength

between 800 and 1000 nm."[8] [9] '533-FWD, 25-26 (citing '533-Pet., 29-30; Lisogurski, 4:42-45, 7:38-8:3, 10:48-52, 10:56-63, 17:37-45, 19:25-31, Figs. 1, 3). As the Board further found, **Lisogurski** discloses that "[t]he intensity of light source 130" is increased "in response to…noise to improve the signal-to-noise ratio," and that "the LED firing rate" is "increas[ed]…to become synchronous with the systole

---

[8] Regardless of the outer bounds of the term "the light emitting diodes configured to generate an output optical beam with one or more optical wavelengths," the indisputable scope of this term is met by **Lisogurski** because **Lisogurski** discloses and renders obvious (1) ***each*** of the light emitting diodes is configured to generate an output optical beam with one or more optical wavelengths, and (2) ***together***, the light emitting diodes are configured to generate an output optical beam with one or more wavelengths. *See, e.g.*, Lisogurski, 10:48-52, 10:56-63; *see also*, Ex. 1077 (Keller), [0089]; Ex. 1059 (Gratton), 2:20-29; Ex. 1060 (Raley), 3:26-63; Ex. 1061 (Dalke), 8:63-9:12. Anthony, ¶¶117-118.

[9] In finding that **Lisogurski** met the "light source" limitations, the Board applied its construction of "a light source comprising a plurality of semiconductor sources that are light emitting diodes……configured to increase signal-to-noise ratio by…increasing a pulse rate of at least one of the plurality of semiconductor sources," as discussed in §VIII.A. '533-FWD, 10-12, 25-29. Anthony, ¶115.

period of an increased cardiac cycle rate," which "result[s] in a physiological measurement having less noise (1.9%), and therefore, an increased signal-to-noise ratio." '533-FWD, 26-30 (citing '533-Pet., 35-39, '533-Pet-Reply, 10; Lisogurski, 2:1-2, 4:26-38, 8:29-35, 9:46-52, 11:43-46, 11:52-55, 25:46-55, 25:66-26:14, 31:11-24, 31:39-55, 33:46-52, 33:56-58, 35:5-9, 35:27-31, 37:6-22, 42:45-58). Anthony, ¶¶115-121.

c. The "plurality of lenses" limitations (claims 5, 13)

Claim 5 recites "**<u>an apparatus</u> comprising a plurality of lenses configured to receive a portion of the output optical beam and to deliver an analysis output beam to a sample**," and claim 13 recites "**<u>the wearable measurement device</u> comprising a plurality of lenses configured to receive a portion of the output optical beam and to receive a portion of the output optical beam and to deliver an analysis beam to a sample**." '533, claims 5, 13 (differences **<u>underlined</u>**). Anthony, ¶122.

To meet the aforementioned **"plurality of lenses" limitations**, the Board generally relied on **Lisogurski's** disclosure of "LEDs" within "wireless sensor 102/312," which it found would have been covered by lenses. '533-FWD, 35-36 (citing '533-Pet., 39-41); Lisogurski, 7:38-8:3, 10:53-56, 19:25-31. As the Board explained, "a [POSITA] would have known that LEDs are often covered by lensing

encapsulants, and would have selected such LEDs for wireless sensor 102/312 in order to 'direct more of the light produced by the LED outward toward the tissue,' thereby improving the efficiency of wireless, battery-powered, sensor 102/312." '533-FWD, 36 (citing '533-Pet., 39-40) (citing '533-Anthony, ¶¶124-128; Ex. 1037 (Schubert), 97-98, 191-199)). Additionally, the Board explained that "a [POSITA], knowing a lens is a basic building block of an optical sensor, would have included lenses in Lisogurski's wireless sensor 102/312." '533-FWD, 36 (citing '533-Pet., 41 (citing '533-Anthony ¶129; Ex. 1038 (Biomedical Engineering Handbook), 765)). Anthony, ¶123.

d. The "receiver" limitations (claims 5, 13)

Claim 5 recites "**a receiver configured to receive and process at least a portion of the analysis output beam reflected or transmitted from the sample and to generate an output signal, wherein the receiver is configured to be synchronized to the light source**," and Claim 13 additionally recites that "**<u>the wearable measurement device</u> further comprising a receiver configured to receive and process at least a portion of the analysis output beam reflected or transmitted from the sample and to generate an output signal, wherein <u>the wearable measurement device</u> receiver is configured to be synchronized to <u>pulses of</u> the light source**." '533, claims 5, 13 (differences in claim 13 **<u>underlined</u>**). Anthony, ¶124.

To meet the aforementioned **"receiver" limitations**, the Board generally relied on a modification of **Lisogurski's** sensor 102/312 (as discussed above in §IX.B.2) such that "detector 140" and "front end processing circuitry 150" of the modified sensor receives and processes "light that is reflected by or has traveled through the subject's tissue." '533-FWD, 37-39 (citing '533-Pet., 44-45, 48-49; Lisogurski, 11:9-10, 11:14-17, 11:20-27, 11:41-46, 11:50-54, 12:42-45, 16:2-9, 17:39-42, Figs. 1, 3). As the Board further found, **Lisogurski's** "front end processing circuitry may use the timing control signals to operate synchronously with light drive circuitry 120," which is "the circuitry that drives Lisogurski's LED-based light source." '533-FWD, 38-39 (citing '533-Pet., 44-45; Lisogurski, 11:41-46, 11:50-54). For example, **Lisogurski** discloses that "front end processing circuitry 150 may…operate synchronously with light drive circuitry 120" by "synchroniz[ing] the operation of an analog-to-digital converter and a demultiplexer with the light drive signal based on the timing control signals." Lisogurski, 11:41-46; '533-Pet., 45. Anthony, ¶125.

e. The "personal device" limitations (claims 5, 13)

Claims 5 and 13 identically recite "**a personal device comprising a wireless receiver, a wireless transmitter, a display, a microphone, a speaker, one or more buttons or knobs, a microprocessor and a touch screen, the personal device configured to receive and process at least a portion of the output signal, wherein**

the personal device is configured to store and display the processed output signal, and wherein at least a portion of the processed output signal is configured to be transmitted over a wireless transmission link." '533, claims 5, 13. Anthony, ¶126.

To meet the aforementioned **"personal device"** limitations, the Board generally relied on a combination of **Lisogurski's** "backend processing circuitry 170," "user interface 180," and "communication interface 190" of monitor 104, as modified (*see* §IX.B.2), which collectively serves as a personal device that receives, processes, stores, and displays the "physiological signals" from the claimed receiver, as illustrated in annotated Figure 1 below.[10] '533-FWD, 39-42 (citing '533-Pet., 49-53; Lisogurski, 14:56-15:16, 15:30-35, 27:31-36, Fig. 1). Anthony, ¶127.

[10] Regardless of the outer bounds of the term "the processed output signal," **Lisogurski** discloses and renders obvious the indisputable scope of this term consistent with the'533's embodiments covered by the term. *See, e.g.*, '533, 26:49-27:33; Lisogurski, 15:43-57, 18:11-15, 18:49-65, 26:55-60, Figs. 1, 3. Anthony, ¶¶132-133.

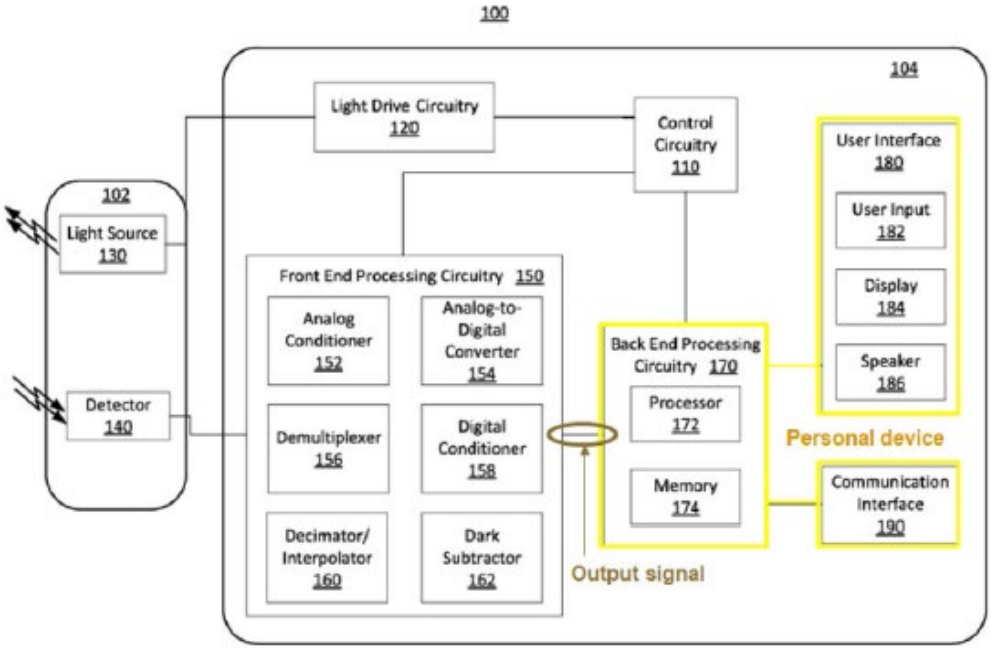

FIG. 1

For example, as the Board found, **Lisogurski**'s monitor 104 with "backend processing circuitry 170 includes microprocessor 172, [a] user interface 180 [that] includes a display, a microphone, a speaker, buttons, and a touch screen, and [a] communication interface 190 [that] includes wireless receivers and transmitters for wireless communications." '533-FWD, 40 (citing '533-Pet, 41; Lisogurski, 15:19-23, 15:49-56, Fig. 1). Anthony, ¶128.

Further, the Board found that "[m]onitor 104/314 receives and processes the output signal from the receiver (i.e., detector 140/318 and front end processing circuitry 150) because processor 172 in back end processing circuitry 170 'receive[s] and process[es] physiological signals [i.e., the output signal] received from front end processing circuitry 150' and 'determine[s] one or more physiological parameters

based on the received physiological signals.'" '533-FWD, 41 (citing '533-Pet., 50-53; Lisogurski, 14:56-64, 15:30-35, Figs. 1, 3). Anthony, ¶129.

As the Board further explained, "[m]onitor 104/314 displays the processed output signal (i.e., a determined physiological parameter) because it includes display 184/320, which can 'display, for example, an estimate of a subject's blood oxygen saturation generated by monitor 104.'" '533-FWD, 41 (citing '533-Pet., 50-53; Lisogurski, 15:30-35). Anthony, ¶130.

And, as the Board found, "[m]onitor 104/314 stores the processed output signal because it includes memory 174, which can store 'historical information [measured in] previous cardiac cycles.'" '533-FWD, 41 (citing '533-Pet., 50-53; Lisogurski, 14:64-15:16, 27:31-36, Fig. 1). The "monitor 104/314 transmits the processed output signal over a wireless link because communications interface 190 can use a wireless communications protocol to transmit the signal to MPPM 326 for display on remote display 328." '533-FWD, 41-42 (citing '533-Pet., 50-53, Lisogurski, 15:43-57, 18:11-15, 18:49-65, 26:55-60, Figs. 1, 3). Anthony, ¶131.

f. The "remote device" limitations (claims 5, 13)

Claims 5 and 13 identically recite "**a remote device configured to receive over the wireless transmission link an output status comprising the at least a portion of the processed output signal, to process the received output status to generate processed data and to store the processed data.**" And claim 13 further

recites, "**and wherein the remote device is capable of storing a history of at least a portion of the received output status over a specified period of time.**" '533, claims 5, 13. Anthony, ¶134.

To meet the aforementioned **"remote device" limitations**, the Board generally relied on **Lisogurski's** "multi-parameter physiological monitor 326." '533-FWD, 42-43 (citing '533-Pet., 53-55; Lisogurski, 15:43-48, 18:49-56, 18:58-62, 20:9-13, 26:51-60). For example, as the Board found, "MPPM 326 can be wirelessly coupled to monitor 104/314 and receive an output status that includes the processed output signal (i.e., a physiological parameter) over a wireless link." '533-FWD, 42 (citing '533-Pet., 53-55; Lisogurski, 15:43-48, 18:49–56, 18:58–62, Fig. 3). As the Board further explained, "MPPM 326 can process the received output status to generate and store processed data because, e.g., monitor 104/314 can 'publish' the data." '533-FWD, 42 (citing '533-Pet., 53-55; Lisogurski, 26:51-60). And, as the Board agreed, MPPM 326 "would need to process the data and then store it" in order to "publish" it." '533-FWD, 42 (citing Ex. 1004, ¶ 155). Thus, as the Board found, "MPPM 326 can also store a history of the output status over a period of time because it can perform statistical analysis on a history of physiological parameter measurements, e.g., to determine the average value and standard deviation of the physiological parameter measurements." '533-FWD, 42 (citing '533-Pet., 53-55; Lisogurski, 20:8-13). Anthony, ¶135.

4. Dependent Claims 6, 12, and 14

Challenged claims 6, 12, and 14 depend directly from independent claims 5 or 13. To the extent they rely on claim language introduced in claim 5 or 13 for antecedent basis, the relevant disclosure from **Lisogurski** that the Board relied on in the prior '533 IPR is discussed in more detail below. *See infra* §§IX.B.1-IX.B.3, IX.B.4.a-IX.B.4.c. Anthony, ¶¶136-137.

a. [6]: "The system of claim 5, wherein at least one of the light emitting diodes emits light with a bandwidth between 20 nanometers to 40 nanometers."

Lisogurski discloses and renders obvious claim 6. Anthony, ¶¶138-143.

Claim 6 depends directly from independent claim 5, which the Board held—and the Federal Circuit affirmed—was rendered obvious by **Lisogurski** in the prior '533 IPR. '533-FWD, 25-43; *see supra* §§IX.B.3 & IX.A. Anthony, ¶¶139-140.

The term "**the light emitting diodes**" refers back to "**light emitting diodes**" (recited in independent claim 5), which the Board found was disclosed by **Lisogurski's** disclosure of "multiple LEDs." '533-FWD, 25-26 (citing '533-Pet. 29-30; Lisogurski, 4:42-45, 7:38-8:3, 10:48-52, 10:56-63, 17:37-45, 19:25-31, Figs. 1, 3). Anthony, ¶141.

Additionally, **Lisogurski** discloses, or at minimum renders obvious, that at least one of its "LEDs" **emits light with a bandwidth between 20 nanometers to 40 nanometers**. **Lisogurski's** "LEDs" ("light emitting diodes") emit light.

Lisogurski, 10:48-56. It was well known in the art that LEDs typically have bandwidth range of 20 to 40 nm.[11] This is further supported by the '533, which states that "LED[s] are solid state components that emit a wavelength band that is of moderate width, typically between about 20 nm to 40 nm." '533, 20:1-11. Anthony, ¶¶142-143.

b. [12]: "The system of claim 5, wherein the output optical beam comprises a plurality of optical wavelengths, and the output signal is generated in part by comparing signals at different optical wavelengths."

Lisogurski renders obvious claim 12. Anthony, ¶¶144-145.

Claim 12 depends directly from independent claim 5, which the Board held—and the Federal Circuit affirmed—was rendered obvious by **Lisogurski** in the prior '533 IPR. '533-FWD, 25-43; *see supra* §§IX.B.3 & IX.A. Anthony, ¶¶146-147.

The term "**the output optical beam comprises a plurality of optical wavelengths**" refers back to "**an output optical beam with one or more optical wavelengths**" (recited in independent claim 5), which the Board found was disclosed by **Lisogurski** in the prior '533 IPR. '533-FWD, 25-26. In particular, the Board relied on **Lisogurski's** disclosure of a "sensor 102/312" that "contain[s] multiple LEDs that emit and direct light toward a subject's tissue, including **an LED**

[11] *See, e.g.*, Ex. 1030 (Tam), 9:570-60; Ex. 1071 (Tarsa), 2:22-24.

that emits red light, and an LED that emits infrared light." '533-FWD, 25-26 (citing '533 Pet., 29-30); Lisogurski, 10:48-52. The same finding applies here. Anthony, ¶148.

Additionally, the term "**the output signal**" refers back to "**an output signal**" (recited in independent claim 5), which the Board found was disclosed and rendered obvious by **Lisogurski** in the prior '533 IPR. '533-FWD, 39 (citing '533 Pet., 44-45); Lisogurski, 11:20-27, 12:42-45. For example, to meet "a receiver configured to…**generate an output signal**" ('533 claim 5), the Board relied on **Lisogurski's** disclosure of **"processed signals," which are generated from Lisogurski's** receiver, as modified (*see supra*, §IX.B.2). '533-FWD, 37-39. In particular, the Board relied on a modified version of **Lisogurski's** Figure 1, where "Lisogurski's detector 140/318 and front end processing circuitry 150 in monitor 104 [is] the receiver that **generates the output signal**." '533-FWD, 37 (citing '533-Pet., 44-45); Lisogurski, 11:9-10, 11:14-17, 11:20-27, 11:41-46, 12:42-45, 17:40-42, Figs. 1, 3. **Lisogurski** discloses that the "front end processing circuitry" receives a "detector signal 214" from "detector 140" and "provide[s] one or more processed signals to back end processing circuitry 170." Lisogurski, 12:42-45. The same finding applies here. Anthony, ¶149.

Lisogurski additionally discloses that **the output signal** (e.g., "processed signals") is **generated in part by comparing signals at different optical**

wavelengths (e.g., "comparing the intensities of" "Red and infrared (IR) wavelengths"). Lisogurski, 4:42-56, 12:42-45, 14:60-62. **Lisogurski** discloses that its physiological monitoring "system may process data to determine physiological parameters using techniques well known in the art." Lisogurski, 4:52-53. "For example, the system may determine blood oxygen saturation using two wavelengths of light and a ratio-of-ratios calculation." Lisogurski, 4:52-56. Such calculation includes **"comparing the intensities of two wavelengths" (e.g., "Red and infrared (IR) wavelengths") to "estimate the blood oxygen saturation of hemoglobin in arterial blood,"** because "highly oxygenated blood will absorb relatively less red light and more IR light than blood with a lower oxygen saturation." Lisogurski, 4:45-51. Anthony, ¶¶150-151. [12]

Lisogurski thus teaches, or at minimum renders obvious, that the **"processed signals" generated by "front end processing circuitry 150"** (which the Board relied on to meet the claimed **"output signal"**) are generated in part by comparing the intensities of two different wavelengths (e.g., Red and IR) to determine physiological parameters. Lisogurski, 4:42-56, 14:60-62. Anthony, ¶¶152-153.

[12] *See also* Ex. 1073 (Basu), [0094]; Ex. 1079 (Bahr), 12:25-28; Ex. 1080 (Presura), Claim 12.

c. [14]: "The system of claim 13, wherein at least one of the light emitting diodes emits light with a bandwidth between approximately 20 nanometers to approximately 40 nanometers."

Lisogurski discloses and renders obvious claim 14. Anthony, ¶¶154-158.

As discussed above in §§IX.B.3 and IX.A, the Board already held—and the Federal Circuit affirmed—that independent claim 13 (cancelled) is unpatentable based on obviousness over **Lisogurski** in the prior '533 IPR. '533-FWD, 25-43; *see* §§IX.B.3 & IX.A. Except for the preamble, this claim is substantively identical to claim 6. Thus, claim 14 is disclosed and rendered obvious by **Lisogurski** for the same reasons discussed for claim 6 above. *See supra* §IX.B.4.a. Anthony, ¶¶155-158.

C. Ground 2: Lisogurski in view of Carlson (Ex. 1028) (Claims 6, 11-12, 14, 18)

1. Overview of Carlson

Carlson discloses an "optical pulsoximetry [device] used for non-invasive measurement of pulsation and oxygen saturation in arterial human or animal blood." Carlson, [0002], [0033], [0049], Fig. 2.

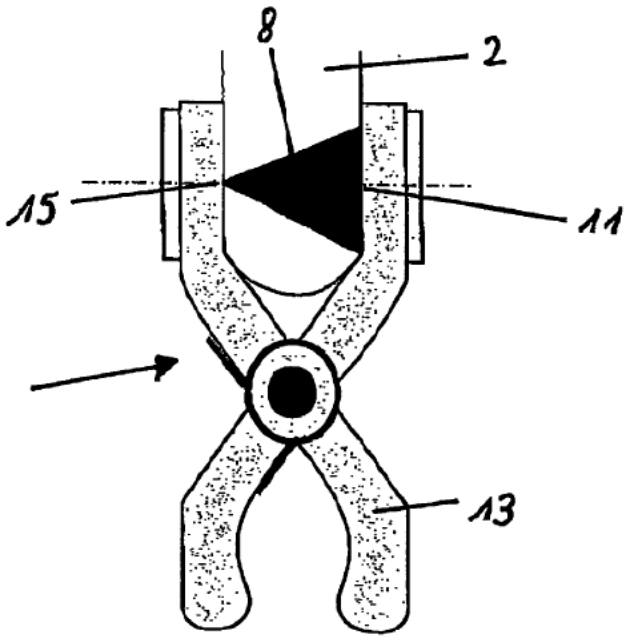

Figure 2

Carlson discloses ear clip sensor 1 with light source 15, which transmits light beam 8 through a patient's earlobe 2, and light detector 11 to detect the transmitted light. Carlson, [0049]. Light source 15 emits light at two wavelengths, 660 and 890nm, and includes two LEDs. Carlson, [0050]. "[L]ight is emitted from the two LEDs 15 and is shaped by the two beam shaping elements or lenses 21 to be guided as beams 12 through the earlobe 2," as illustrated in Figure 4 below. Carlson, [0062]; *see also* '533-FWD, 18-20. Anthony, ¶¶159-160.

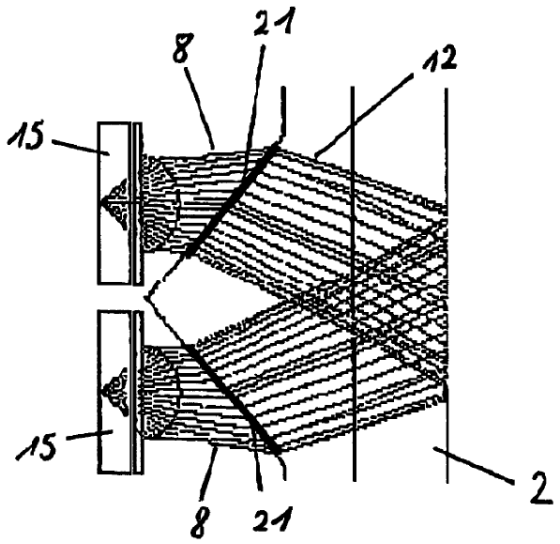

Figure 4

Carlson also includes "the double pass filter 33[] to guarantee that only light in the range of" certain wavelength "is transmitted through the filter." Carlson, Figs. 6a, 6b, 6c, [0015], [0026], [0056], [0058], [0059], [0061], [0062]. Anthony, ¶161.

Carlson teaches that patient mobility can cause "standard pulsoximeter sensors [to] suffer from signal instability and insufficient robustness versus environmental disturbances" including ambient light, such as sunlight, that influences "the measurement of the pulsoximeter sensor." Carlson, [0004], [0068]; *see also* '533-FWD, 18-20. Anthony, ¶162.

Carlson thus provides "optical and/or electronic means for increasing Signal-to-Noise ratio (S/N)...in rough (optical) environmental conditions" such as emitting pulsed light from its LEDs. Carlson, [0010], [0069]. **Carlson** "temporarily modulate[s] the optical radiation of the LED at the carrier frequency f_C in order to

shift the power spectrum of the pulsoximeter signals into a higher frequency range where environmental optical radiation is unlikely." Carlson, [0065]. Temporary modulation frequency f_C is "chosen in such a way that it is outside the frequency spectrum of sunlight and of ambient light." Carlson, [0069]. This allows easy discrimination of pulsoximeter signals from environmental signals, such as sunlight and ambient light, and "increas[es] significantly the Signal-to-Noise and Signal-to-Background ratio." Carlson, [0069]; *see also* '533-FWD, 18-20. Anthony, ¶163.

2. Motivation to Combine Lisogurski and Carlson

Lisogurski and **Carlson** are analogous art. They are in the same field as the '533—which includes physiological monitoring—and are reasonably pertinent to the problems addressed by the '533—e.g., improving optical physiological monitoring. *See* '533, 4:12-17, 5:5-6:3, 17:47-56; Lisogurski, 1:10-11, 9:46-60; Carlson, [0002], [0004], [0006]-[0008], [0010]; '533-FWD, 24-25 (citing Pet., 24-26, 37-39). Anthony, ¶164.

First, with respect to **Carlson's** light modulation teachings, the Board found in the prior '533 IPR that a POSITA would have been motivated to apply **Carlson's** technique of "us[ing] a light source modulation to temporarily modulate the optical radiation of the LED" at a frequency that "is chosen in such a way that it is outside the frequency spectrum of sunlight and of ambient light," "given that Lisogurski teaches that the firing rate of the LEDs, can be adjusted in response to changes in

environmental conditions." '533-FWD, 33-35 (citing '533-Pet., 35, 37-38; Lisogurski, 25:49-55, 27:44-52, 37:6-22; Carlson, [0069]). As the Board noted, both **Carlson** and **Lisogurski** "recognize the problem of ambient light noise 'and the need to offset its negative impact on the signal-to-noise ratio'" such that a POSITA "would have found it obvious to configure Lisogurski to increase the firing rate (frequency) of LEDs as taught by Carlson." '533-FWD, 31-34 (citing '533-Pet., 38-39); Lisogurski, 1:67-2:3, 9:46-60; 37:6-18; Carlson, [0064], [0067]-[0069]). Anthony, ¶165.

A POSITA would have had a reasonable expectation of success in applying **Carlson's** teaching of increased firing rate of LEDs to **Lisogurski's** system. As the Board already found, **Lisogurski** teaches "(1) taking a physiological measurement in cardiac cycle modulation mode using LEDs modulated at a 1Hz pulse rate, (2) exiting the cardiac cycle modulation mode upon detecting ambient light noise, and (3) taking the measurement in a second mode that varies any combination of LED brightness, duty cycle, or firing rate," and **Carlson** teaches "(4) taking a physiological measurement using an LED modulated at a 1000 Hz pulse rate to reduce ambient light noise." '533-FWD, 33-34 (citing '533-Pet., 35, 37 (citing Lisogurski, 25:49-55, 27:44-52, 37:6-22; Carlson [0069])). As the Board explained, this "proposed combination of Lisogurski and Carlson is the simple substitution of one element for another known in the field to achieve a predictable result." '533-

FWD, 35 (internal quotations omitted). Therefore, both references teach techniques for changing the operation of their light sources to reduce the effects of ambient light and noise, and a POSITA would have understood that any one of these techniques is a common substitute for another, and a POSITA would have known such a combination (yielding the claimed limitations) would predictably work and provide the expected functionality. Anthony, ¶166.

Second, with respect to **Carlson's** lenses teachings, in the prior '533 IPR, the Board found that a POSITA would have been motivated to implement **Lisogurski's** wireless sensor 102/312 to include lenses according to **Carlson's** teachings "to increase its optical signal power and signal-to-noise ratio without increasing its actual power." '533-FWD, 37. Indeed, a POSITA would have applied **Carlson's** lens teachings to **Lisogurski's** sensor to focus the light emitted by the LEDs onto a user's skin to advantageously increase its signal-to-noise ratio without also having to increase the amount of power consumed by the device. '533-Anthony, ¶133 (citing Carlson, [0010], [0014]; Lisogurski, 6:3-6, 9:49-60, 13:60-14:10, 14:40-55, 37:6-20). **Lisogurski** recognizes the importance of "improv[ing] the signal-to-noise ratio" of its system. Lisogurski, 9:50-52; *see also* Lisogurski, 6:3-6, 9:49-60, 13:60-14:10, 14:40-55, 37:6-20. Thus, a POSITA would have looked to a reference like **Carlson** that discloses "us[ing] a beam-shaping element, such as e.g. diffractive or refractive lenses, to direct the emitted optical radiation of, e.g., the LED light source

into the human or animal tissue and the photon detecting element in order to increase the optical signal power, detected by the pulsoximeter sensor, and thus increasing the Signal/Noise—and signal/Background ratio," by a factor of 5. Carlson, [0014], [0010]. Accordingly, a POSITA would have been motivated to employ lenses, as taught by **Carlson**, in **Lisogurski's** sensor to further its own goals of improving the signal-to-noise ratio of the measured optical signal. '533-Anthony, ¶133 (citing Carlson, [0010], [0014]; Lisogurski, 6:3-6, 9:49-60, 13:60-14:10, 14:40-55, 37:6-20). Anthony, ¶¶167-168.

A POSITA would have had a reasonable expectation of success in applying **Carlson's** lenses teaching to **Lisogurski's s**ystem. Both **Lisogurski** and **Carlson** teach optical physiological measurement systems utilizing LEDs as light sources, and using lenses to focus the light of LEDs was well-known in the art. For example**,** **Lisogurski** discloses an "optical physiological monitoring system" that uses "one or more light source 316 for emitting light at one or more wavelengths into a subject's tissue." Lisogurski, 1:10-11, 17:37-45; *see also* Lisogurski, 10:48-56. **Carlson** discloses "lenses[ ] to direct the emitted optical radiation of, e.g., the LED light source into the human … tissue." Carlson, [0014], [0054]. The use of lenses for this purpose was well-understood and widely adopted in the field of optical physiological monitoring. Ex. 1038 (Biomedical Engineering Handbook), 765. Accordingly, applying **Carlson's** lens teachings to **Lisogurski's** sensor would have

been a predictable and straightforward combination of known elements within the art. *See also* '533-Anthony, ¶134. Thus, a POSITA would have known such a combination (yielding the claimed limitations) would predictably work and provide the expected functionality. '533-Anthony, ¶¶134, 84-86. Thus, a POSITA would have known such a combination (yielding the claimed limitations) would predictably work and provide the expected functionality. Anthony, ¶169.

Third, with respect to **Carlson's** filtering teachings, a POSITA would have been motivated to apply **Carlson's** teachings of filtering out optical wavelengths to **Lisogurski's** modified sensor 102/312 (as discussed in §IX.C.2) to advantageously filter out unwanted background/ambient light before it reaches **Lisogurski's** detector(s) (e.g., "detector" 140) and negatively impacts **Lisogurski's** physiological measurements. **Lisogurski** and **Carlson** both recognize the desirability of removing background noise to improve the quality of physiological measurements. *See, e.g.*, Lisogurski, 6:7-31, 14:46-55, 12:42-49, 11:9-27 (discussing the need to "remove ambient and background signals" such as "ambient light," which "may have a detrimental effect on the signal-to-noise ratio of the detection signal" used to measure blood oxygen levels); Carlson, [0059], [0062], [0063] (using a "filter" to prevent "any stray light" from reaching the "photo detecting element" to increase "the Signal-to-Background ratio" by "a factor 50 to 1000"). To address this problem, **Carlson** teaches that one way to remove such ambient and background signals is to

use "optical wavelength filters to suppress by geometric and/or optical means the parasitic contribution of environmental radiation." Carlson, [0026]. Thus, a POSITA would have been motivated to apply **Carlson's** filter teachings to **Lisogurski's** sensor to filter out unwanted background noise and ambient light before they reach **Lisogurski's** detector(s) to improve the quality of physiological measurements determined by **Lisogurski's** physiological monitoring system. Anthony, ¶170.

A POSITA would have had a reasonable expectation of success in applying **Carlson's** filter teachings to **Lisogurski's** detector(s). It was well-known to use filters with detectors in light sensors to reduce the amount of unwanted signals being detected.[13] Thus, a POSITA would have known such a combination (yielding the claimed limitations) would predictably work and provide the expected functionality. Anthony, ¶171.

3. Independent Claims 5 and 13 (cancelled)

Challenged Claims 6, 11-12, 14, 18 depend directly from independent claims 5 or 13. To the extent the Challenged Claims rely on claim language introduced in claims 5 or 13 for antecedent basis, the Board's mapping of the relevant claim

[13] *E.g.*, Carlson, [0026], [0059], [0062], Figs. 6a, 6b, 6c; Ex. 1072 (Lovejoy), [0014], [0030], [0031], [0032]; Ex. 1073 (Basu), [0038], [0039]. Anthony, ¶171.

language based on **Lisogurski in view of Carlson** in the prior '533 IPR is discussed in more detail below. *See infra* §§IX.C.4-IX.C.5. Anthony, ¶172.

As discussed above (§IX.A), the Board already held—and the Federal Circuit affirmed—that **Lisogurski in view of Carlson** renders obvious independent claims 5 and 13 in the prior '533 IPR (from which all challenged claims depend). '533-FWD, 25-43 ("we find Petitioner has demonstrated by a preponderance of evidence that the combination of **Lisogurski** and **Carlson** teaches all the limitations of claim 13" and "claim 5"). For example, the Board relied on **Lisogurski's** disclosures and on obviousness based on **Lisogurski** alone for all limitations (as discussed above in §IX.B.3), and the Board alternatively relied on **Carlson** for the **"pulse rate" limitation (claims 5, 13)**[14] and **"plurality of lenses" limitation (claims 5, 13)**. '533-FWD, 25-43. Anthony, ¶¶173-174.

a. "Pulse Rate" Limitation (claims 5, 13)

With respect to the **"pulse rate" limitation**, the Board found that **Lisogurski** "teaches (1) modulating an LED by pulsing it at a 1 Hz rate that matches a cardiac cycle, (2) detecting ambient light noise, and (3) changing the LED modulation to

[14] In relevant part, claims 5 and 13 both identically recite "the light source configured to increase signal-to-noise ratio…by increasing a pulse rate of at least one of the plurality of semiconductor sources." Anthony, ¶¶173-174.

operate in a second mode by changing one or more of the LED brightness, duty cycle (on time per cycle), or firing rate" to "ensure an adequate signal-to-noise ratio." '533-FWD, 30-33 (citing '533-Pet., 35; Lisogurski, 5:48-54, 25:46-55, 27:44-52, 37:6-22). Additionally, the Board found that **Carlson** "teaches 'pulsing the LEDs reduces the effects of ambient light including sunlight' when 'the pulse frequency (*'pulse rate'*) is chosen in such a way that it is outside the frequency spectrum of sunlight and of ambient light,'" such as "above approximately 1000 Hz," and that doing so "improve[s] a pulsoximeter's signal-to-noise." '533-FWD, 30-35 (citing '533-Pet. 35, 37-38; Lisogurski, 5:48-54, 25:46-52, 25:49-55, 27:44-52, 37:6-22; Carlson, ¶¶62-69)). Anthony, ¶¶175-176.

As the Board found, and as discussed above (§IX.C.2), a POSITA would have been motivated to apply **Carlson's** high frequency light modulation teachings to **Lisogurski**'s physiological monitoring system to advantageously improve the signal-to-noise ratio of **Lisogurski's** system by reducing the negative impact of ambient light and noise. '533-FWD, 31-35; *see* §IX.C.2. Anthony, ¶177.

b. "Plurality of Lenses" Limitations (Claims 5, 13)

With respect to the **"plurality of lenses" limitations (claims 5, 13)**, the Board found that **Carlson** discloses "two light emitting sources for an oximetric sensor, including beam shaping optics," which include "two lenses 21 that receive light beams 8 emitted by LEDs 15…and deliver light bundles or beams 12 to sample 2,"

as illustrated in Figure 4 below. '533-FWD, 36-37 (citing '533-Pet., 41-43; Carlson, ¶¶35, 54, 62, Fig. 4). Anthony, ¶178.

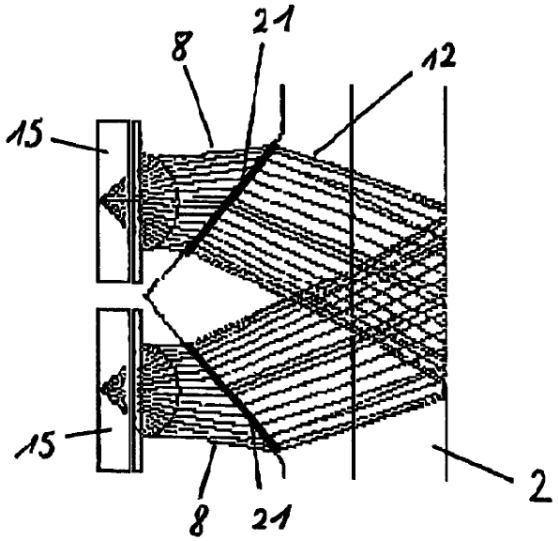

Figure 4

As the Board found, and as discussed above, a POSITA would have been motivated to apply **Carlson's** lens teachings to **Lisogurski's** "wireless sensor 102/312" to improve the signal-to-noise ratio of **Lisogurski's** physiological measurements while reducing power consumption. '533-FWD, 35-37; *see* §IX.C.2. Anthony, ¶179.

4. Dependent Claims 6, 12, 14

As discussed above (§IX.C.3), in addition to determining that independent claims 5 and 13 are obvious over **Lisogurski** alone (*see supra* §IX.B), the Board also determined that **Lisogurski in view of Carlson** independently renders obvious claims 5 and 13. '533-FWD, 25-43. Therefore, for the reasons discussed above in

§IX.B.[6], [12], [14], claims 6, 12, and 14 (which depend directly from either independent claim 5 or 13) are additionally rendered obvious by **Lisogurski in view of Carlson**. Anthony, ¶180.

5. Claims 11/18

Lisogurski in view of Carlson renders obvious claims 11 and 18. Anthony, ¶¶181-190.

Claims 11 and 18 recite: "The system of [claims 5/13], wherein the receiver further comprises one or more filters in front of one of more detectors to select a fraction of the one or more optical wavelengths." Claims 11 and 18 depend directly from independent claims 5 and 13, respectively, which the Board held were rendered obvious by **Lisogurski** in view of **Carlson**. '533-FWD, 25-43; *See supra* §IX.C.3; §IX.A. Anthony, ¶182.

The term "**the receiver**" refers back to "**a receiver**" (recited in independent claims 5 and 13), which the Board determined was rendered obvious by **Lisogurski** in the prior '533 IPR. '533-FWD, 25-26. For example, to meet the claimed "**receiver"** limitation of claim 5 in the prior '533 IPR, the Board relied on "Lisogurski's detector 140/318 and front end processing circuitry 150 in monitor 104," as modified based on the knowledge of a POSITA (*see supra* §§IX.B.2-IX.B.3); '533-FWD, 37-39 (citing '533-Pet., 44-45); Lisogurski, 11:9-10, 11:14-17, 11:20-27, 11:41-46, 12:42-45, 17:40-42, Figs. 1, 3. Additionally, **Lisogurski**

discloses that its "detector" can be configured to be "one or more detector[s]" for "detecting the light that is reflected by or has traveled through the subject's tissue." Lisogurski, 17:39-45. Thus, **Lisogurski** discloses the **receiver** (e.g., detector 140/318 and front end processing circuitry 150 in modified sensor, *see* §§IX.B.2-IX.B.3) has **one of more detectors (**e.g., "one or more detector[s]"**)**.[15] Anthony, ¶183.

The term "**the one or more optical wavelengths**" refers back to "**one or more optical wavelengths**" (recited in claims 5 and 13), which the Board determined was disclosed by **Lisogurski** in the prior '533 IPR. '533-FWD, 25-26. For example, to meet "an output optical beam with **more optical wavelengths**" ('533 claims 5, 13), the Board relied on **Lisogurski's** LEDs that emit light in the red wavelength range (between about 600 to 700 nm) and infrared wavelength range (between about 800 nm to 1000 nm). §IX.B.3; '533-FWD, 25-26 (citing '533-Pet. 29-30); Lisogurski, 10:48-52, 10:52-63. Anthony, ¶184.

Carlson further discloses **one or more filters** (e.g., "optical wavelength filter

[15] Regardless of the outer bounds of the term "one of more detectors," **Lisogurski** meets the indisputable scope of this term because **Lisogurski** discloses and renders obvious (1) one or more detectors, and (2) one of multiple detectors. *See, e.g.*, Lisogurski, 17:39-45. Anthony, ¶189.

or double pass filter") **to select a fraction of one or more optical wavelengths** (e.g., "the double pass filter 33 is arranged to guarantee that only light in the range of approximately 660 nm" and "in the range of approximately 850 nm to 910 nm," such as "890 nm," is "transmitted through the filter").[16] Carlson, Figs. 6a, 6b, 6c, [0015], [0026], [0056], [0058], [0059], [0061], [0062]. Anthony, ¶185.

For example, **Carlson** discloses "sensor part 31," which is "the part of the sensor after the transmitted light has passed [the sample], e.g., the earlobe of a human or animal individual." Carlson, [0059]. This "sensor part 31" includes "optical wavelength filter or double pass filter" in front of a "photo detecting element 35." Carlson, Figs. 6a, 6b, 6c, [0015], [0026], [0056], [0058], [0059], [0061], [0062]. "[T]he detection sensitivity of this photo detecting element is "within a range of approximately 500 to 1000nm," meaning that "any light below or above this range would not be detected." Carlson, [0056], Fig. 5b. Anthony, ¶186.

[16] Regardless of the outer bounds of the term "to select a fraction of the one or more optical wavelengths," **Carlson** meets the indisputable scope of this term because **Carlson** discloses and renders obvious selecting a fraction of (1) one or more optical wavelengths, and (2) a single optical wavelength. *See, e.g.*, Carlson, [0057]-[0058], [0062]; Anthony, ¶190.

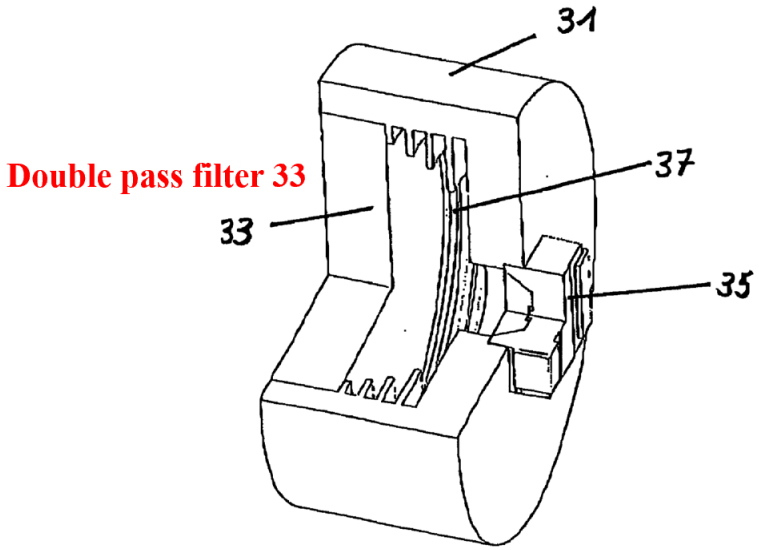

Figure 6a

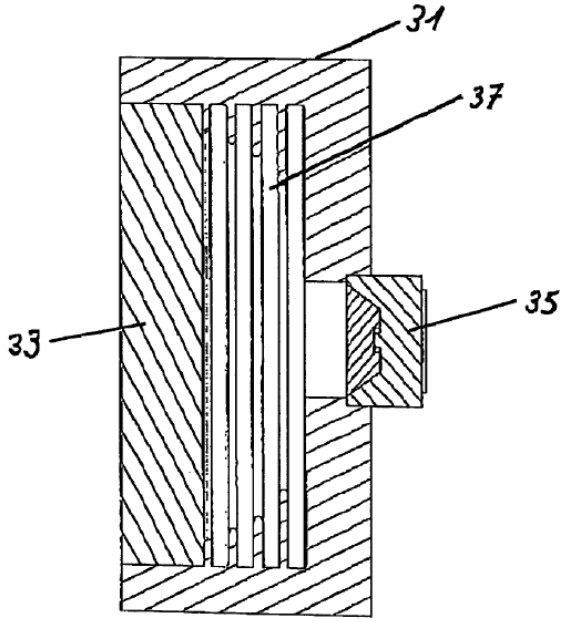

Figure 6b

Figur 6c

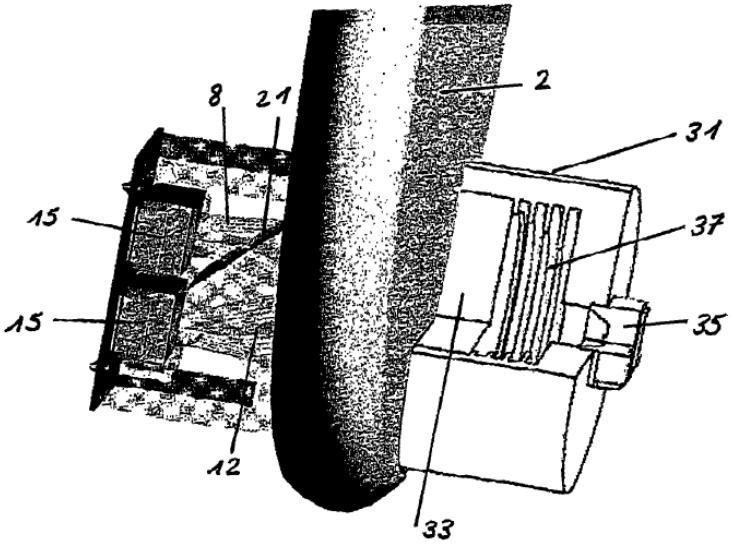

For example, **Carlson** discusses "arrang[ing] an optical wavelength filter or double pass filter which is e.g. light permeable at the wavelength of approximately 660 nm and in the range of approximately 850 nm to 910 nm." Carlson, [0056]. For example, **Carlson** discloses that its "optical wavelength filter or double pass filter" prevents "stray light" from reaching the "photo detecting element" and "guarantee[s] that only light in the range of approximately 660 nm and in the range of approximately 890 nm is transmitted through the filter." Carlson, Figs. 6a, 6b, 6c, [0015], [0026], [0056], [0058], [0059], [0061], [0062]. Thus, **Carlson's** "optical wavelength filter or double pass filter" work **to select a fraction of one or more optical wavelengths**. Anthony, ¶¶187.

As discussed above (*see* §IX.C.2), a POSITA would have been motivated to apply **Carlson's** filter teachings to **Lisogurski's** wireless sensor to advantageously filter out unwanted background noise and ambient light before they reach the detector(s) in **Lisogurski's** sensor. Anthony, ¶188.

D. Grounds 3-4: Lisogurski (alone or in view of Carlson) in further view of Tam (Claims 6, 14)

1. Independent Claims 5 and 13 (cancelled)

As explained above, **Lisogurski alone or in view of Carlson** renders obvious claims 5 and 13 (cancelled). *See* §§IX.B.3 & IX.C.3. Anthony, ¶191.

2. Claim 6

As discussed above, **Lisogurski** alone or in view of **Carlson** render obvious claim 6. *See* §§IX.B.4.a & IX.C.4. Anthony, ¶¶192-193.

Claim 6 recites "The system of claim 5, wherein at least one of the light emitting diodes emits light with a bandwidth between 20 nanometers to 40 nanometers."

To the extent additional disclosure is required, Tam (Ex. 1030) discloses that at least one of the light emitting diodes emits light with a bandwidth between 20 nanometers to 40 nanometers ("[a] 40 nm bandwidth" for LED sources in the red to near infrared range, and "20 nm bandwidth" for the lower visible wavelengths). Tam, 9:57-60. For example, **Tam** discloses an "optical device for measurement of hemoglobin derivatives" that uses "small readily available lights

sources," such as "light emitting diodes (LEDs)." Tam, 1:48-60, 4:54-61. **Tam** explains that the LED light sources are used to "create a portable co-oximeter" (Tam, 2:44-46), and that a "40 nm bandwidth is representative of current LED sources in the red to near infrared range, and about 20 nm bandwidth is representative for the lower visible wavelengths" (Tam, 9:57-60). Anthony, ¶194.

Like **Lisogurski** and **Carlson**, **Tam** is in the same field as the '533—which includes physiological monitoring—and is reasonably pertinent to the problems addressed by the '533—e.g., improving optical physiological monitoring. *See* §IX.C.2; Tam, 1:38-45, 1:46-2:60. Anthony, ¶195.

A POSITA would have been motivated to apply **Tam's** disclosure of LEDs with typical bandwidths of 20-40 nanometers to **Lisogurski's** system (alone or in view of **Carlson**) in order to minimize manufacturing cost, while maintaining the accuracy of the measurement. Tam, 9:60-62, 13:45-66. For instance, **Tam** notes that "[a] 40 nm bandwidth is representative of current LED sources in the red to near infrared range, and about 20 nm bandwidth is representative for the lower visible wavelengths." Tam, 9:57-62. A POSITA would have thus been motivated to use such LEDs with known characteristics for ease of use and to avoid unnecessary "premium cost" required for LEDs with smaller bandwidth such that manufacturing cost can be decreased. Tam, 9:61-62. Indeed, **Tam** discloses that light sources with high bandwidth (e.g., ~100nm) would not allow accurate measurements or even have

the capability of distinction between hemoglobin derivatives, while bandwidth filters such as "a 40 nm bandwidth 'filter'" would improve the accuracy of the measurement device. Tam, 13:45-14:10. A POSITA would thus have been further motivated to apply **Tam's** disclosure of LEDs with "20 nm" and "40 nm" bandwidth to **Lisogurski** in order to maintain the accuracy of **Lisogurski's** physiological monitoring system, while minimizing the manufacturing cost. Anthony, ¶196.

A POSITA would have had a reasonable expectation of success in applying **Tam's** teaching to **Lisogurski's** system. Indeed, the use of LEDs with a bandwidth of 20 to 40 nm was well known in the art. As the Examiner already found during prosecution—and Applicant did not contest—Fidler (Ex. 1074) "teaches that conventional LEDs have a bandwidth of approximately 30nm, falling between 20nm to 40nm." '533FH, 723; *see* §V.B. As the Examiner noted, "[i]t would have been obvious to a person of ordinary skill in the art at the time of the invention to combine the system…with the light emitting diodes having a bandwidth between 20nm and 40nm, as taught by Fidler, for the benefit of using what is conventionally known in the art." *Id.* Anthony, ¶197.

Furthermore, **Tam's** teaching concerns the bandwidth of LEDs, while **Carlson's** teachings concern other components of a measurement device such as "lenses" or "filters," and operations such as "pulse rate." *See* §IX.C (Ground 2). The above-discussed motivation and reasonable expectation of success would

remain the same for **Lisogurski's** system alone or in view of **Carlson**. Anthony, ¶198.

3. Claim 14

Lisogurski (either alone or in view of **Carlson**) discloses and renders obvious claim 14. Claim 14 recites: "The system of claim 13, wherein at least one of the light emitting diodes emits light with a bandwidth between approximately 20 nanometers to approximately 40 nanometers."

As discussed in §§IX.B.3 and IX.C.3, the Board already held that independent claim 13 (cancelled) is unpatentable based on obviousness over **Lisogurski** (either alone or in view of **Carlson**) in the prior '533 IPR. '533-FWD, 25-43. Except for the preamble, this claim is identical to claim 6. Thus, claim 14 is disclosed and rendered obvious by **Lisogurski** (either alone or in view of **Carlson**) in view of **Tam** for the same reasons discussed for claim 6 above. *See* §IX.D.2. Anthony, ¶199.

X. SECONDARY CONSIDERATIONS

There is no evidence in the '533's prosecution history or elsewhere supporting any secondary considerations arguments, or evidence of nexus to any challenged Claim. *See generally* '533FH. Indeed, as demonstrated by the prior art referenced herein, any purported solutions to problems or unexpected results in the '533 were already well known. To the extent that PO contends that the accused products in the Texas Case are infringing and thus demonstrate commercial success, any such

conclusory allegations would fail to provide any indication that the Claims are non-obvious. Such conclusory assertions would not demonstrate that Petitioners' products infringe, let alone show any nexus between any alleged commercial success and the Claims, or that any alleged success is due to an allegedly claimed component instead of the many unclaimed features of the accused products. To the extent PO asserts the existence of any secondary considerations in its responses, Petitioners reserve the right to address any such evidence. Anthony, ¶¶200-201.

XI. CONCLUSION

Substantial, new, and noncumulative technical teachings have been presented for each Challenged Claim, which are rendered obvious for the reasons set forth above. Anthony, ¶¶73-199. There is a reasonable likelihood Petitioners will prevail as to each of these Claims. *Inter partes* review of Claims 6, 11-12, 14, and 18 of the '533 is accordingly requested.

Dated: August 5, 2025

Respectfully submitted,

By: /*James L. Davis, Jr.*/
Name: James L. Davis, Jr.
Registration No. 57,325
ROPES & GRAY LLP

Lead Counsel for Petitioners

CERTIFICATE OF COMPLIANCE

Pursuant to 37 C.F.R. §42.24(a) and (d), the undersigned hereby certify that the Petition For *Inter Partes* Review complies with the type-volume limitation of 37 C.F.R. §42.24(a)(i) because, exclusive of the exempted portions, it contains 11,861 words as counted by the word processing program used to prepare the paper.

Dated: August 5, 2025

Respectfully submitted,

By: /*James L. Davis, Jr.*/
Name: James L. Davis, Jr.
Registration No. 57,325
ROPES & GRAY LLP

Lead Counsel for Petitioners

CERTIFICATE OF SERVICE

I hereby certify that on August 5, 2025, I caused a true and correct copy of the foregoing Petition for *Inter Partes* Review of U.S. Patent No. 9,651,533 and supporting exhibits to be served via Federal Express on the Patent Owner at the following correspondence address of record as listed on Patent Center:

109543 - Brooks, Kushman P.C./Cheetah Omni MedSci
150 W 2nd St., Suite 400N
Royal Oak, MI 48067
UNITED STATES

———

A courtesy copy was also sent via electronic mail to Patent Owner's litigation counsel at the following addresses:

William E. Davis III
bdavis@davisfirm.com
DAVIS FIRM, PC

Daniel S. Stringfield
dstringfield@nixonpeabody.com
Timothy P. Maloney
tmaloney@nixonpeabody.com
Daniel D. Georgiev
dgeorgiev@nixonpeabody.com
Peter Krusiewicz
pkrusiewicz@nixonpeabody.com
NIXON PEABODY LLP
Corey T. Leggett
cleggett@nixonpeabody.com
NIXON PEABODY LLP

Elizabeth M. Chiaviello
echiaviello@nixonpeabody.com
Benjamin R. Holt
bholt@nixonpeabody.com
NIXON PEABODY LLP

Dated: August 5, 2025

By: /*James L. Davis, Jr.*/
Name: James L. Davis, Jr.
Registration No. 57,325
Lead Counsel for Petitioners