UNITED STATES PATENT AND TRADEMARK OFFICE

BEFORE THE PATENT TRIAL AND APPEAL BOARD

_____

SAMSUNG ELECTRONICS CO., LTD.,
SAMSUNG ELECTRONICS AMERICA, INC.,
FOSSIL GROUP, INC.,
FOSSIL STORES I, INC.,
FOSSIL PARTNERS, L.P.,
OURA HEALTH OY, AND
ONEPLUS TECHNOLOGY (SHENZHEN) CO., LTD.

Petitioners,

v.

OMNI MEDSCI, INC.,

Patent Owner.

_____

Case PGR2025-00064
Patent No. 12,193,790

_____

PETITION FOR POST GRANT REVIEW

TABLE OF CONTENTS

Page

I. INTRODUCTION 1
II. MANDATORY NOTICES UNDER 37 C.F.R. §42.8 3
A. Real Party-in-Interest 3
B. Related Matters 3
C. Lead and Back-Up Counsel 5
III. PAYMENT OF FEES 6
IV. REQUIREMENTS FOR POST GRANT REVIEW 7
A. Grounds for Standing 7
B. Identification of Challenge 7
1. The Specific Art on Which the Challenge Is Based 7
2. Statutory Grounds on Which the Challenge Is Based 8
V. ’790 PATENT AND PROSECUTION HISTORY 8
A. ’790 8
B. Prosecution History 10
VI. §325(d) AND §324(a) DISCRETION DOES NOT APPLY 11
A. §325(d) 11
B. §324(a) 12
VII. LEVEL OF ORDINARY SKILL IN THE ART 15
VIII. CLAIM CONSTRUCTION 16
A. “to identify an object” limitation ([7.m]) 17
B. Additional Terms Discussed in ’484 and ’533 IPRs and District Courts 17
IX. GROUNDS OF UNPATENTABILITY 18
A. Collateral Estoppel Applies to the Challenged Claim 18
B. Ground 1: Lisogurski (Claim 7) 20
1. Overview of Lisogurski 20
2. Motivation to Modify Lisogurski 25

3. Claim Limitations 27
C. Ground 2: Lisogurski in further view of Carlson (claim 7) 41
1. Overview of Carlson 41
2. Motivation to Combine 43
3. Limitation [7.d] 44
X. SECONDARY CONSIDERATIONS 45
XI. CONCLUSION.....46

EXHIBIT LIST

Exhibit No.	DESCRIPTION
1001	U.S. Patent No. 12,193,790 ("'790")
1002	File History of U.S. Application No. 18/438,144 ("'790FH")
1003	Declaration of Brian Anthony in Support of Petition for Post Grant Review of U.S. Patent No. 12,193,790 ("Anthony")
1004	Declaration of Brian Anthony in Support of Petition for *Inter Partes* Review of U.S. Patent No. 9,651,533 submitted in IPR2019-00916, Ex. 1003 ("'533-Anthony")
1005	*Apple Inc. v. Omni Medsci, Inc.*, No. IPR2019-00916, Paper 1 (P.T.A.B. Apr. 10, 2019) ("'533-Pet.")
1006	Apple Inc. v. Omni Medsci, Inc., No. IPR2019-00916, Paper 23 (P.T.A.B. Jan. 31, 2020) ("'533-POR")
1007	*Apple Inc. v. Omni Medsci, Inc.*, No. IPR2019-00916, Paper 16 (P.T.A.B. Oct. 18, 2019) ("'533-Inst.")
1008	*Apple Inc. v. Omni Medsci, Inc.*, No. IPR2019-00916, Paper 39 (P.T.A.B. Oct. 14, 2020) ("'533-FWD")
1009	*Omni MedSci, Inc. v. Apple Inc.*, No. 21-01229, ECF 69 (Fed. Cir. June 8, 2022)
1010	Declaration of Brian Anthony in Support of Petition for *Inter Partes* Review of U.S. Patent No. 10,517,484 submitted in IPR2021-00453, Ex. 1003 ("'484-Anthony")
1011	*Apple Inc. v. Omni Medsci, Inc.*, No. IPR2021-00453, Paper 1 (P.T.A.B. Jan. 22, 2021) ("'484-Pet.")
1012	*Apple Inc. v. Omni Medsci, Inc.*, No. IPR2021-00453, Paper 10 (P.T.A.B. Nov. 12, 2021) ("'484-POR")
1013	*Apple Inc. v. Omni Medsci, Inc.*, No. IPR2021-00453, Paper 7 (P.T.A.B. Aug. 6, 2021) ("'484-Inst.")
1014	*Apple Inc. v. Omni Medsci, Inc.*, No. IPR2021-00453, Paper 11 (P.T.A.B. Feb. 4, 2022) ("'484-Pet.-Reply")
1015	*Apple Inc. v. Omni Medsci, Inc.*, No. IPR2021-00453, Paper 22 (P.T.A.B. Aug. 3, 2022) ("'484-FWD")
1016	*Apple Inc. v. Omni Medsci, Inc.*, No. IPR2021-00453, Paper 26 (P.T.A.B. Feb. 14, 2025) ("'484-RFWD")

Exhibit No.	DESCRIPTION
1017	*Apple Inc. v. Omni MedSci, Inc.*, No. 23-01034, ECF 44 (Fed. Cir. June 21, 2024)
1018	*Omni MedSci, Inc. v. Apple Inc.*, 2:18-cv-00134-RWS, Dkt. No. 211 (E.D. Tex. June 24, 2019)
1019	*Omni MedSci, Inc. v. Apple Inc.*, 2:18-cv-00429-RWS, Dkt. No. 152 (E.D. Tex. Aug. 14, 2019)
1020	Second Amended Docket Control Order, June 16, 2025. *Omni MedSci, Inc. v. Samsung Electronics Co., Ltd. et al.*, No. 2:24-cv-01070-JRG-RSP (E.D. Tex.)
1021	Plaintiff's Disclosure of Asserted Claims & Infringement Contentions, March 12, 2025. Omni MedSci, Inc. v. Samsung Electronics Co., Ltd. et al., No. 2:24-cv-01070-JRG-RSP (E.D. Tex.)
1022	Reserved
1023	Defendants' Supplemental Invalidity and Subject Matter Eligibility Contentions, July 18, 2025. *Omni MedSci, Inc. v. Samsung Electronics Co., Ltd. et al.*, No. 2:24-cv-01070-JRG-RSP (E.D. Tex.)
1024	File History of U.S. Application No. 17/078,771 ("'455FH")
1025	U.S. Patent No. 9,241,676 ("Lisogurski")
1026-1027	Reserved
1028	U.S. Patent Pub. No. 2005/0049468A1 ("Carlson")
1029-1030	Reserved
1031	U.S. Patent No. 8,050,730 ("Zhang")
1032	Reserved
1033	U.S. Patent Pub. No. 2011/0237911 ("Lamego")
1034	U.S. Patent No. 5,942,749 ("Takeuchi")

Exhibit No.	DESCRIPTION
1035	U.S. Patent No. 5,822,473 (“Magel”)
1036	US Patent 5,592,124 (“Mullins”)
1037	E.F. Schubert, Light-Emitting Diodes (Cambridge Univ. Press, 2nd ed. reprinted 2014)
1038	Joseph D. Bronzino, The Biomedical Engineering Handbook (1995)
1039	U.S. Patent No. 8,079,735 (“Vakil”)
1040	U.S. Patent No. 8,304,805 (“Lochtefeld”)
1041-1080	Reserved
1081	US. Patent No. 9,651,533 (“’533”)
1082	U.S. Patent No. 10,517,484 (“’484”)
1083	Reserved
1084	Declaration of Jonathan Bradford

TABLE OF ABBREVIATIONS

Abbreviation	DESCRIPTION
Claim/Challenged Claim	Claim 7 of the ’790
IPR	*Inter Partes* Review
PGR	Post Grant Review
Petitioners	Petitioners Samsung Electronics Co. Ltd., Samsung Electronics America Inc., Fossil Group, Inc., Fossil Stores I, Inc., Fossil Partners, L.P., Oura Health Oy, and OnePlus Technology (Shenzhen) Co., Ltd.
PO	Patent Owner
POSITA	Person of Ordinary Skill in the Art
Board	Patent Trial and Appeal Board
EDTX	Eastern District of Texas
Texas Case	*Omni MedSci, Inc. v. Samsung Electronics Co., Ltd. et al.*, No. 2:24-cv-01070-JRG-RSP (E.D. Tex.)
’533-IPR	*Apple Inc. v. Omni Medsci, Inc.*, No. IPR2019-00916 (P.T.A.B.)
’484-IPR	*Apple Inc. v. Omni Medsci, Inc.*, No. IPR2021-00453 (P.T.A.B.)

THE CHALLENGED CLAIM

[7.pre] An optical system, comprising:

[7.a] a wearable device for measuring one or more physiological parameters,

[7.b] the wearable device adapted to be placed on a wrist of a user;

[7.c] the wearable device including a light source comprising a plurality of semiconductor diodes that are configured to generate an output optical light having one or more optical wavelengths, wherein at least a portion of the one or more optical wavelengths is a near-infrared wavelength between 700 nanometers and 2500 nanometers;

[7.d] the wearable device comprising one or more lenses configured to receive at least a portion of the output optical light and to deliver a lens output light to tissue comprising skin;

[7.e] the wearable device further comprising a detection system configured to receive at least a portion of the lens output light reflected from the tissue and to generate an output signal having a signal-to-noise ratio,

[7.f] wherein the detection system is configured to be synchronized to the light source;

[7.g] wherein the detection system comprises a plurality of detectors that are spatially separated from each other, and wherein at least one analog to digital converter is coupled to at least one of the plurality of detectors;

[7.h] wherein the output signal is indicative of the one or more of the physiological parameters;

[7.i] the wearable device configured to increase the signal-to-noise ratio by increasing light intensity of at least one of the plurality of semiconductor diodes from an initial light intensity; and

[7.j] the detection system further configured to: generate a first signal responsive to light received while the semiconductor diodes are off,

[7.k] generate a second signal responsive to light received while at least one of the semiconductor diodes is on, and

[7.l] increase the signal-to-noise ratio by comparing the first signal and the second signal; and

[7.m] wherein the wearable device is at least in part configured to identify an object.

Pursuant to §§321-329 and §42.1,[1] Samsung Electronics Co. Ltd., Samsung Electronics America Inc., Fossil Group, Inc., Fossil Stores I, Inc., Fossil Partners, L.P., Oura Health Oy, and OnePlus Technology (Shenzhen) Co., Ltd. ("Petitioners") respectfully petition for post grant review of claim 7 ("Claim" or "Challenged Claim") of U.S. Patent No. 12,193,790 (Ex.1001, "'790"). It is more likely than not—and it is highly likely—that the Challenged Claim is unpatentable as explained herein. Petitioners request review of the Claim and judgment finding them unpatentable under §103.

I. INTRODUCTION

The Board already found claim limitations identical and/or substantially identical to those in Claim 7 of the '790 unpatentable in IPR2019-00916 ('533-IPR) and IPR2021-00453 ('484-IPR). *See generally* §§IX.B-C; Anthony, ¶¶9-12, 42-43, 68-207. Estoppel thus precludes Patent Owner Omni MedSci, Inc. ("PO" or "Omni") from relitigating unpatentability of those identical or substantially identical limitations in the '790. *See Samsung Elecs. Co., Ltd. v. Netlist, Inc.*, IPR2025-00002, Paper 17 at 17-24 (PTAB May 15, 2025) ("Patent Owner is

[1] Section cites are to 35 U.S.C. (AIA) or 37 C.F.R. as context indicates. All emphasis/annotations added unless noted. Figure annotations herein generally quote the Claim for reference. Citations herein are exemplary and not meant to be limiting.

collaterally estopped" based on FWDs relying on the same ground to find "substantially similar" limitations in related patents obvious).

Similar to the claims at issue in the '533- and '484-IPRs, the '790 is generally directed to a physiological measurement system comprising a wearable **measurement device** with light sources and detectors to generate an output signal with physiological parameters to be transmitted to a **smart phone/tablet**, and common techniques to improve signal-to-noise ratio of such signals. '790, 21:7-28, 35:47-37:19, 58:24-45, 70:33-52, 79:34-40. Anthony, ¶¶40-43.

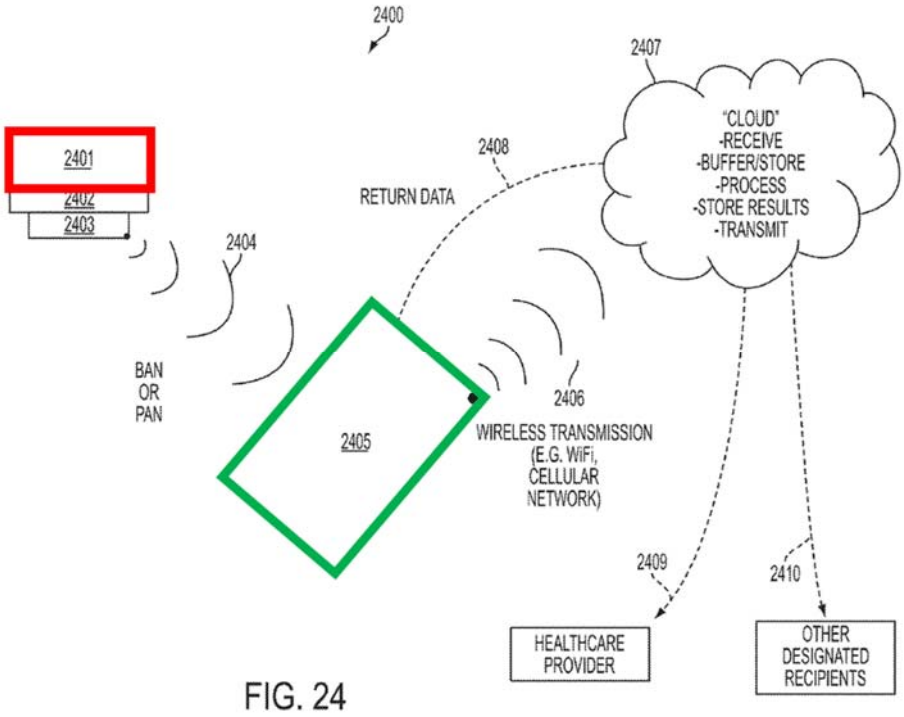

FIG. 24

'790, FIG. 24. Anthony, ¶44.

Additional limitations in the Challenged Claim at most recite a common target

sample for physiological measurements (*e.g.*, tissue comprising skin). *See generally* §IX.B.3. Any such additional limitation was well-known in the art. *See generally* §§IX.B-C. Anthony, ¶¶40-43.

Accordingly, and as demonstrated below, the Challenged Claim is unpatentable and Petitioners are more likely than not to prevail with respect to the same.

II. MANDATORY NOTICES UNDER 37 C.F.R. §42.8

A. Real Party-in-Interest

Petitioners Samsung Electronics Co. Ltd., Samsung Electronics America, Inc., Fossil Group, Inc., Fossil Stores I, Inc., Fossil Partners, L.P., Oura Health Oy, and OnePlus Technology (Shenzhen) Co., Ltd., in addition to Ouraring, Inc. and Guangdong OPPO Mobile Telecommunications Corp., Ltd., are the real parties-in-interest. No other party had access to or control over the present Petition, and no other party funded or participated in preparation of the present Petition.

B. Related Matters

The ’790 is the subject of the following co-pending civil actions:

- *Omni Medsci, Inc. v. Samsung Electronics. Co., Ltd. et al.*, 2:24-cv-01070-JRG-RSP (E.D. Tex) (“Texas Case”); and
- *Omni MedSci, Inc. v. Whoop, Inc.*, 1:25-cv-00140-JLH (D. Del.).

The ’484, which is related to the ’790, is also subject to the following appeal: *Omni Medsci, Inc. v. Apple, Inc.*, No. 25-1646 (Fed. Cir.).

Petitioners are concurrently filing a petition for IPR of the ’790, IPR2025-01253. *See* Petitioners’ Ranking and Explanation of Parallel Petitions accompanying this Petition.

Petitioners are also concurrently filing petitions for IPR of the related U.S. Patent Nos. 9,651,533 (IPR2025-01250), 10,874,304 (IPR2025-01251), 11,160,455 (IPR2025-01252), 12,268,475 (IPR2025-01254), and a petition for PGR of the related U.S. Patent No. 12,268,475 (PGR2025-00063). Petitioners are further concurrently filing a petition for IPR of U.S. Patent 9,055,868 (IPR2025-01249) asserted in the Texas Case.

C. Lead and Back-Up Counsel

Lead Counsel	Backup Counsel
James L. Davis, Jr. Reg. No. 57,325 **ROPES & GRAY LLP** 525 University Avenue, 8th Floor Palo Alto, CA 94301 Phone: +1-650-617-4000 Fax: +1-617-235-9492 james.l.davis@ropesgray.com Samsung-Omni-Ropes-IPR-Service@ropesgray.com **Mailing address for all PTAB correspondence:** ROPES & GRAY LLP IPRM—Floor 43 Prudential Tower 800 Boylston Street Boston, Massachusetts 02199-3600	Hyun-Joong Kim Reg. No. 79,936 **ROPES & GRAY LLP** 1211 Avenue of the Americas New York, NY 10036 Phone: +1 212-596-9000 Fax: +1-617-235-9492 Daniel.Kim@ropesgray.com Frances Zhang Reg. No. 73,589 **ROPES & GRAY LLP** 2099 Pennsylvania Avenue, N.W. Washington, DC 20006-6807 Phone: +1-202-508-4600 Fax: +1-617-235-9492 frances.zhang@ropesgray.com
	Jasjit S. Vidwan Reg. No. 72,080 **MAYER BROWN LLP** 1999 K Street, NW Washington, DC 20006-1101 Tel.: 202.263.3065 JVidwan@mayerbrown.com Robert G. Pluta Reg. No. 50,970 **MAYER BROWN LLP** 71 S. Wacker Drive Chicago, IL 60606 Tel.: 312.701.8641 RPluta@mayerbrown.com

Lead Counsel	Backup Counsel
	Jared A. Smith Reg. No. 73,749 **FISH & RICHARDSON P.C.** 12860 El Camino Real, Suite 400 San Diego, CA 92130 Phone: +1 858-678-4702 Fax: +1 858-678-5099 jasmith@fr.com Ricardo J. Bonilla Reg. No. 65,190 **FISH & RICHARDSON P.C.** 1717 Main Street, Suite 5000 Dallas, TX 75201 Phone: +1 214-760-6150 Fax: +1 214-747-2091 rbonilla@fr.com
	Jack Shaw Reg. No. 72,262 **CHERRY JOHNSON SIEGMUND JAMES PC** 8140 Walnut Hill Lane, Suite 105 Dallas, Texas 75231 Tel: 254-732-2242 Fax: 866-627-3509 jshaw@cjsjlaw.com

Petitioners consent to electronic service of documents to the email addresses identified above.

III. PAYMENT OF FEES

The undersigned authorizes the Office to charge the fee required by §42.15(b)

and any additional fees that might be due to Deposit Account No. 18-1945, under Order No. 110797-0060-656.

IV. REQUIREMENTS FOR POST GRANT REVIEW

A. Grounds for Standing

As further detailed in Petitioners' Ranking and Explanation of Parallel Petitions, Patent Owner asserts a 12/31/2012 priority date for the '790 and Petitioners do not contest Patent Owner's assertion for the purposes of the '790-IPR. Ex.1021; Petitioners' Ranking and Explanation of Parallel Petitions.

Nonetheless, in the event the Board finds that the '790 is an AIA patent, pursuant to §42.204(a), Petitioners certify the '790 is available for PGR under §42.202. Petitioners also certify that they are not barred or estopped from requesting review on the grounds identified herein.

Out of an abundance of caution, therefore, Petitioners are filing this PGR that is substantively duplicative of the '790-IPR. At least one of the '790-IPR and this PGR is proper.

B. Identification of Challenge

Pursuant to 37 C.F.R. §§42.204(b) and (b)(1), and subject to Petitioners' Ranking and Explanation of Parallel Petitions accompanying this Petition, Petitioners request PGR of the Challenged Claim and that the Board cancel the same as unpatentable under 35 U.S.C. §103 on the following grounds.

1. The Specific Art on Which the Challenge Is Based

Petitioners rely upon the following art (Anthony, ¶¶68-70):

Name	Ex.	Publication	Filed	Published /Issued	Prior art under at least
Lisogurski	1025	US 9,241,676	5/31/2012	1/26/2016	§102(a)(2)
Carlson	1028	US 2005/0049468	9/3/2003	3/3/2005	§102(a)(2)

Each of the above references is prior art to the Claims based on the earliest AIA eligible date of the ’790 patent, December 17, 2013.[2]

2. Statutory Grounds on Which the Challenge Is Based

Ground	Claim	Basis	References
1	7	§103	**Lisogurski**
2	7		**Lisogurski** in view of **Carlson**

V. ’790 PATENT AND PROSECUTION HISTORY

A. ’790

’790 Figure 24 shows an embodiment of the physiological measurement system:

[2] Regardless of whether the ’790 is a pre-AIA or AIA patent, the art presented herein pre-dates the earliest priority date regardless.

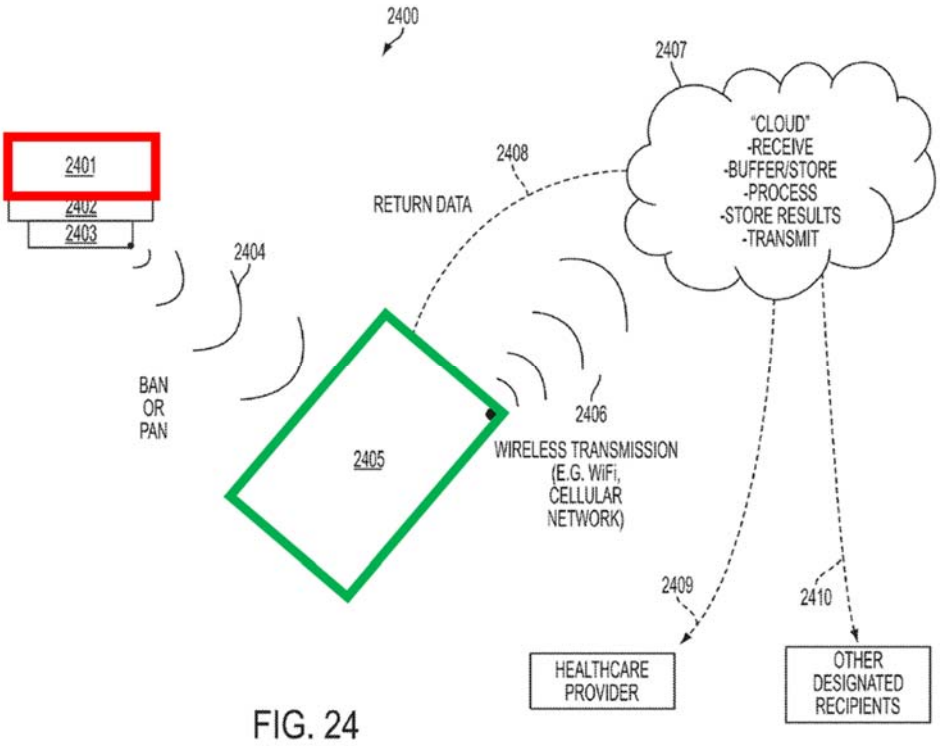

FIG. 24

'790, 35:47-37:19. **Wearable measurement device 2401** with processor 2402 and transmitter 2403 communicates measurements to **smart phone/tablet 2405**. '790, 35:47-67. Anthony, ¶44.

Wearable device 2401 can be placed on a user's body and includes semiconductor sources that generate an output optical light with a plurality of optical wavelengths, and a driver for the same. '790, 8:35-45. **Wearable device 2401** further comprises lenses to receive and direct light from the semiconductor sources to the user's tissue, and a detection system that receives the light reflected from the tissue and to generate an output signal having a signal-to-noise ratio. '790, 8:45-52. The detection system comprises spatially separated detectors. '790, 8:52-56. The

’790 patent describes several common techniques to improve signal processing to select the constituents of interest, including using increased light intensity, modulation, lock-in, and dark subtraction techniques. ’790, 21:7-28, 58:24-45, 70:33-52, 79:34-40. Anthony, ¶¶45-46

B. Prosecution History

The ’790 issued from U.S. Pat. App. 18/438,144, filed 2/9/2024. Following an interview with the Examiner, the Applicant filed a terminal disclaimer in view of several patents in the same family including U.S. Patent Nos. 11,896,346, 9,494,567, 9,993,159, 10,441,176, 11,564,577, 9,500,635, 9,164,032, 9,500,634. ’790FH, 263-265, 271. The pending claims were then allowed without any amendments or Office Actions. ’790FH, 301. In the Notice of Allowance, the Examiner noted that the prior art does not disclose or render obvious “detection system…synchronized to the light source,” “detection system comprises a plurality of detectors…spatially separated,” “analog to digital converter…coupled to…detectors,” “output signal is indicative of…physiological parameters,” “increase the signal-to-noise ratio by increasing light intensity,” and the detection system further configured to: “generate a first signal responsive to light received while the semiconductor diodes are off,” “generate a second signal responsive to light received while at least one of the semiconductor diodes is on,” “increase the signal-to-noise ratio by comparing the first signal and the second signal;” and “wearable device…configured to identify an

object." '790FH, 307. For the reasons set forth below, **Lisogurski** alone or in view of **Carlson** discloses these limitations. *See* §§IX.B-C. Anthony, ¶¶47-50.

VI. §325(D) AND §324(A) DISCRETION DOES NOT APPLY

A. §325(d)

Under the *Advanced Bionics* framework, there is no basis for discretionary denial under §325(d) as **the grounds raised by this Petition are not the same or substantially the same as the art and arguments raised during prosecution of the '790 patent**. *Advanced Bionics, LLC v. MED-EL Elektromedizinische Geräte GmbH*, IPR2019-01469, Paper 6, at 8 (PTAB, Feb. 13, 2020) (precedential).

The grounds raised by this Petition are not the same or substantially same as the art and arguments raised during prosecution. *Id.* The Examiner did not consider the references relied upon in this Petition. Although **Lisogurski** and **Carlson** were cited in an IDS during the examination of U.S. Patent No. 11,160,455 ("'455") to which '790 claims priority, and while '484-Anthony, '484-Pet., '533-Anthony, '533-Pet., and '533-FWD were also cited in an IDS during examination of '455, none of them was cited during prosecution of the '790. Ex.1024, 279, 310, 350, 365, 371, 416. Indeed, while the '484-FWD (8/3/2022) was rendered prior to the issuance of the '790 (1/14/2025), it was not cited in an IDS in the '790 or any of the applications to which the '790 claims priority.

Even if the art and arguments were substantially the same, the Examiner

erred in a manner material to the patentability of the Claim. Where the "Examiner did not expressly consider" **Lisogurski** and **Carlson**, it is difficult, if not impossible to explain "why the Examiner allowed the claims" or "how the Examiner might have considered the arguments presented in the Petition." *Bowtech, Inc. v. MCP IP, LLC*, IPR2019-00379, Paper 14, at 20 (PTAB July 3, 2019). If the Examiner had considered substantially the same art or arguments, it was error to allow Claim 7 because, *e.g.*, the Examiner failed to reject Claim 7 over references or combinations of references teaching each of the limitation that the Examiner found not disclosed in the prior art (§V.B). *See* §§IX.B-C. Indeed, the Board in the '484-IPR and '533-IPR already found unpatentable limitations identical or substantially identical to those in the Claim based on **Lisogurski** and **Carlson**, as applied herein (*see* §§IX.B-C (citing prior FWDs)). It was material error for the Examiner to fail to apply the same grounds during prosecution. Anthony, ¶¶47-50.

The Board should not deny institution under §325(d).

B. §324(a)

The Texas Case also does not warrant exercising discretion under §324(a).

Factor 1 weighs in favor of institution. Petitioners intend to seek a stay of the Texas Case pending the outcome of this PGR, along with other IPRs and PGR related to the litigation dispute. At the time of institution, it is highly unlikely that the Court will have conducted a *Markman* hearing, which is currently scheduled for 2/13/2026.

Ex.1020, 4. The EDTX has routinely granted stays prior to claim construction, since cases have "not reached such an advanced stage that it would weigh against a stay." *Broadphone LLC v. Samsung Elecs. Co.*, No. 2:23-CV-00001-JRG-RSP, 2024 WL 3524022, at *2-3 (E.D. Tex. July 24, 2024).

While ***Factors 2 and 3*** are neutral or at most weigh slightly against institution, they deserve little weight given Petitioners' diligence in preparing and filing this Petition.

Factor 4 weighs strongly in favor of institution. Petitioners hereby stipulate that, if the PTAB institutes this proceeding, Petitioners will not pursue in the Texas Case (1) the specific grounds asserted in this proceeding or any ground that was raised or could have been raised in an PGR proceeding against the Challenged Claim; or (2) combinations of the prior art asserted in this proceeding with any other type of prior art against the Challenged Claim.

Factor 5 is neutral or weighs at most only slightly against institution. While Petitioners and PO are the same parties in the Texas Case, institution and a public trial record of the important invalidity grounds in the Petition will reduce issues for the public, including all parties besides Petitioners who currently are or may in the future be subject to litigation involving the '790.

Factor 6 weighs strongly in favor of institution. The '790 issued in 2025 and

was not asserted prior to the Texas Case—PO has not developed settled expectations. *Berkshire Hathaway Energy Co. et al. v. MES, Inc.*, IPR2025-00274, Paper 23 at 3 (PTAB July 2, 2025); *Intel Corp. v. Proxense LLC*, IPR2025-00327, Paper 12 at 2-3 (PTAB June 26, 2025). Further, the Petition is strong and presents compelling unpatentability arguments that were overlooked during prosecution. *See* §§IX.B-C. Indeed, in prior '533- and '484-IPRs, the Board already rejected identical or substantially identical claims to the '790 based on **Lisogurski** and **Carlson** as applied herein. *See Posco Co., Ltd. v. Arcelormittal*, IPR2025-00370, Paper 10 at 3 (PTAB June 25, 2025) ("The fact that the Board previously determined related claims to be unpatentable—prior to the issuance of the challenged claims in this proceeding—tips the balance against discretionary denial."); *Tesla, Inc., v. Intellectual Ventures II LLC*, IPR2025-00217, Paper 9 at 2 (PTAB June 13, 2025) ("Other considerations, however, counsel against discretionary denial. For example, Petitioner…asserts that the merits are strong because the Board previously determined there was a reasonable likelihood that similar claims of an ancestor patent were unpatentable in three separate proceedings with respect to some of the challenged patents in these proceedings.").

Indeed, the Board is uniquely positioned to address the issue of collateral estoppel based on the '533- and '484-IPRs. *ParkerVision, Inc. v. Qualcomm Inc.*,

116 F.4th 1345, 1362 (Fed. Cir. 2024) ("[A] finding underlying an unpatentability decision in an IPR proceeding [does not] collaterally estop[] a patentee from making validity arguments regarding separate, related claims in district court litigation…."); *Samsung Elecs. Co., Ltd. v. Netlist, Inc.*, IPR2025-00002, Paper 17 at 17-24 (PTAB May 15, 2025) ("Patent Owner is collaterally estopped" as to obviousness of all challenged claims, based on FWDs relying on the same ground to find "substantially similar" limitations in related patents obvious); *Grünenthal GmbH v. Antecip Bioventures II LLC*, PGR2019-00003, Paper 22 at 49-50 (PTAB May 5, 2020) (principles behind application of collateral estoppel in IPR "apply with equal force in the context of our administrative post grant review process"); *see also* §IX.A.

Accordingly, the Board should not exercise its discretion to deny institution.

VII. LEVEL OF ORDINARY SKILL IN THE ART

For the purposes of this Petition only, Petitioners do not contest the PO's assertion that the Claim is entitled to the earliest claimed priority date of 12/17/2013. §IV.A.

As the Board concluded and PO did not dispute in the '533-/'484-IPRs, on or before the claimed priority date of 12/17/2013, a POSITA "would have [had] a good working knowledge of optical sensing techniques and their applications, and familiarity with optical design and signal processing techniques." '533-FWD, 8-9; *see also* '484-Inst., 7-8; '484-FWD, 11 n.7. Such a person would have obtained such

knowledge through "an undergraduate education in engineering (electrical, mechanical, biomedical, or optical) or a related field of study, along with relevant experience studying or developing physiological monitoring devices…in industry or academia." '533-FWD, 8-9; *see also* '484-Inst., 7-8; '484-FWD, 11 n.7. Anthony, ¶¶51-54.

VIII. CLAIM CONSTRUCTION

Claim terms subject to IPR are to be construed according to the *Phillips* standard applied in district court. §42.200(b). Only terms necessary to resolve the controversy must be construed. Because the prior art asserted herein discloses embodiments within the Claim's indisputable scope, the Board need not construe the Claim's outer bounds.[3] Other than noted here, all claim terms should be construed according to their plain and ordinary meaning as they would have been understood by a POSITA. Anthony, ¶¶55-67.

In prior Board or district court proceedings involving patents related to the '790, certain terms identical to or substantially similar to language in the Claim were

[3] In the Texas Case, Defendants identified certain limitations of the '790 as potentially indefinite. Ex.1023, 243-244. Regardless of the outer bounds of these limitations, the prior art discloses and renders obvious embodiments within the indisputable scope of these limitations. Anthony, ¶¶66-67.

construed, as detailed below. Though Petitioners do not believe that those terms need to be construed here, the prior art discloses and renders obvious those terms, including under those prior constructions, as discussed in §§IX.A-B, *infra*. Anthony, ¶¶55-65.

A. "to identify an object" limitation ([7.m])

In the '484-FWD, the Board construed "to identify an object" to mean "to recognize or establish an object as being a particular thing," which the Federal Circuit affirmed on appeal. '484-FWD, 8-10; '484-RFWD, 3. Anthony, ¶56.

B. Additional Terms Discussed in '484 and '533 IPRs and District Courts

In the '484-IPR, the petitioner proposed construing "optical light" and informed the Board of its proposed construction for "lens" in a parallel district court case, Omni did not propose constructions for these terms, and the Board did not construe them. '484-Pet., 20; '484-Inst., 9-10; '484-FWD, 7-8. In the '533-IPR, the petitioner proposed construing "plurality of lenses," which the Board declined to construe. '533-Pet., 19-20; '533-FWD, 9-10. The Board in '533- and '484-IPRs did not construe any other claim present in the '790. Anthony, ¶¶57-63.

Prior to the Board's '533-FWD, in two Eastern District of Texas cases involving related patents to the '790, including the '533, the district court determined that the term "lenses" should be given its "plain and ordinary meaning without the

need for further construction." Ex.1018, 10-13 (construing "plurality of lenses" in claims 5 and 13 of the '533); Ex.1019, 12-15 (construing "lens" and "one or more lenses" in related patents). Anthony, ¶¶64-65.

Petitioners agree that these terms do not require further construction for purposes of this IPR.

IX. GROUNDS OF UNPATENTABILITY

As explained below, the Challenged Claim is unpatentable as obvious. This Petition is supported by the Declaration of Brian Anthony, which describes the prior art's scope and content at the time of the '790. Anthony, ¶¶68-70.

A. Collateral Estoppel Applies to the Challenged Claim

The vast majority of the limitations of the Challenged Claim were already found unpatentable in prior '533/'484-FWDs. '533-FWD; '484-FWD (FWD issued prior to appeal); '484-RFWD (FWD issued on remand).[4]

It thus is an efficient use of Board resources to address similar claims in the related '790, and collateral estoppel should apply to entire limitations [7.pre]-[7.l]. *See Embody, Inc. v. LifeNet Health*, IPR2025-00248, Paper 13 at 2-3 (PTAB June

[4] *See also Apple Inc. v. Omni Medsci, Inc.*, IPR2020-00175, Paper 26 (June 14, 2021); *Omni MedSci, Inc. v. Apple Inc.*, No. 2021-2213, 2022 WL 2062167 (Fed. Cir. June 8, 2022).

26, 2025).

First, these limitations are "identical" or substantially identical to limitations already found unpatentable by the Board in the prior '533 and/or '484-IPRs against PO. *See* '533-FWD, 25-43; '484-FWD, 12-55.[5] *Google LLC v. Hammond Dev. Int'l*, 54 F.4th 1377, 1381-82 (Fed. Cir. 2022) (applying collateral estoppel to uphold unpatentability of certain unchallenged claims where they used "slightly different language to describe substantively the same invention" as claims already held unpatentable by the Board in a related IPR); *Samsung Elecs. Co., Ltd. v. Netlist, Inc.*, IPR2025-00002, Paper 17 at 17-24 (PTAB May 15, 2025) ("Patent Owner is collaterally estopped" as to obviousness of all challenged claims, based on FWDs relying on the same ground to find "substantially similar" limitations in related patents obvious); *see also Grünenthal GmbH v. Antecip Bioventures II LLC*, PGR2019-00003, Paper 22 at 49-50 (PTAB May 5, 2020) (principles behind application of collateral estoppel in IPR "apply with equal force in the context of our administrative post grant review process"). To the extent there are any differences between the aforementioned '790 limitations and prior limitations at issue in the

[5] To meet these identical/substantially identical limitations, the Board relied on the same embodiments of **Lisogurski** in the '533-FWD and '484-FWD, as does this Petition. *See* §§IX.B-C. Anthony, ¶¶10-11.

'484/'533 IPRs, they are immaterial and met for the same reasons. Anthony, ¶¶71-207.

Second, these limitations were "actually litigated" in the prior '533 and '484-IPRs. *Google*, 54 F.4th at 1381-82; '533-FWD, 25-43; '533-Pet, 21-63; '533-POR, 13-32; '484-FWD, 12-55; '484-Pet, 21-66; '484-POR, 14-42.

Third, the Board's findings with respect to these limitations were "essential" to the Board's FWDs, which were final judgments because they were affirmed by the Federal Circuit or not appealed. *United Therapeutics Corp. v. Liquidia Techs., Inc.*, 74 F.4th 1360, 1372 (Fed. Cir. 2023) ("[W]e have previously held that an IPR decision does not have collateral estoppel effect until that decision is affirmed or the parties waive their appeal rights.").

Fourth, PO here (Omni) was the same PO who defended against the prior '533 and '484-IPRs and thus had a full and fair opportunity to litigate the patentability of these limitations in the prior IPRs. *Google*, 54 F.4th at 1381-82.

PO is thus collaterally estopped from relitigating the unpatentability determinations of the aforementioned limitations in this PGR. To the extent PO is not collaterally estopped from relitigating the unpatentability of one or more of the aforementioned limitations in this PGR, the Board's findings (as discussed below in §§IX.B-C) regarding the unpatentability of the immaterially different limitations in

the ’484/’533 IPR(s) apply equally here. Anthony, ¶¶68-207.

B. Ground 1: Lisogurski (Claim 7)

1. Overview of Lisogurski

Lisogurski discloses a “physiological monitoring system [that] monitor[s] one or more physiological parameters...using one or more physiological sensors.” Lisogurski, 3:44-46, 4:3-5. Such sensors may include a pulse oximeter with a light sensor placed on a patient’s fingertip, toe, forehead, or earlobe. Lisogurski, 4:6-7. ’533-FWD, 12-13; ’484-FWD, 13. Anthony, ¶74.

Lisogurski Figure 1 is reproduced below:

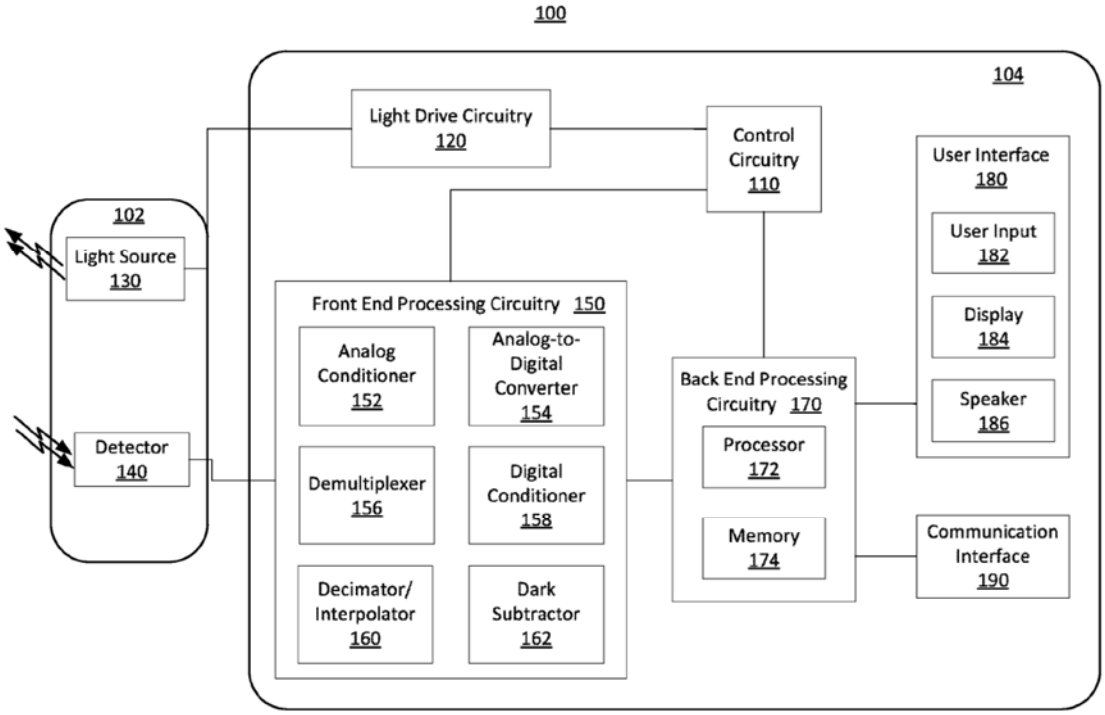

FIG. 1

Lisogurski Figure 1 is a “block diagram of an illustrative physiological monitoring

system." Lisogurski, 2:11-13. The system includes sensor 102, including light source 130 and detector 140, and monitor 104 for "generating and processing physiological signals of a subject." Lisogurski, 10:44-49. Light source 130 emits one or more wavelengths of light, including red and IR light emitters (e.g., LEDs) emitting 600-700nm and 800-1000nm wavelength light, respectively. Lisogurski, 10:49-11:8. Spatially separated detectors 140 detect light intensity, converts them to an electrical signal, and sends the detection signal to monitor 104, where it is processed to determine physiological parameters. Lisogurski, 11:9-23, 17:40-45. '533-FWD, 15-16; '484-FWD, 15-16. Anthony, ¶¶75-76.

Monitor 104 includes user interface 180, communication interface 190, and control circuitry 110 for controlling light drive circuitry 120, front end processing circuitry 150, and back end processing circuitry 170. Lisogurski, 11:28-36. Light drive circuitry 120 generates a light drive signal for turning on/off and controlling the intensity of light source 130. Lisogurski, 11:38-54. Front end processing circuitry 150 "receive[s] a detection signal from detector 140 and provide[s] one or more processed signals to back end processing circuitry 170," and "synchronize[s] the operation of an analog-to-digital converter and a demultiplexer with the light drive signal based on the timing control signals." Lisogurski, 11:40-46, 12:42-48. '533-FWD, 16; '484-FWD, 16. Anthony, ¶¶77-79.

Backend processing circuitry 170 includes processor 172 and memory 174, and "receive[s] and process[es] physiological signals received from front end processing circuitry 150" to "determine one or more physiological parameters." Lisogurski, 14:56-64. Backend processing circuitry 170 is "communicatively coupled [to] use[r] interface 180 and communication interface 190." Lisogurski, 15:16-18. User interface 180 includes "user input 182, display 184, and speaker 186," and may include "a keyboard, a mouse, a touch screen, buttons, switches, [and] a microphone." Lisogurski, 15:19-22. Communication interface 190 allows "monitor 104 to exchange information with external devices," and includes transmitters and receivers to allow wireless communications. Lisogurski, 15:43-57. **Lisogurski** discloses, while "the components of physiological monitoring system 100...are shown and described as separate components....the functionality of some of the components may be combined in a single component," and "the functionality of some of the components...may be divided over multiple components." Lisogurski, 15:66-16:12. '533-FWD, 15, 17; '484-FWD, 15-17. Anthony, ¶¶80-83.

Lisogurski Figure 3 is "a perspective view of an embodiment of a physiological monitoring system," including sensor 312, monitor 314, and multi-parameter physiological monitor ("MPPM") 326. Lisogurski, 2:23-25, 17:35-36, 18:44-45. Anthony, ¶84.

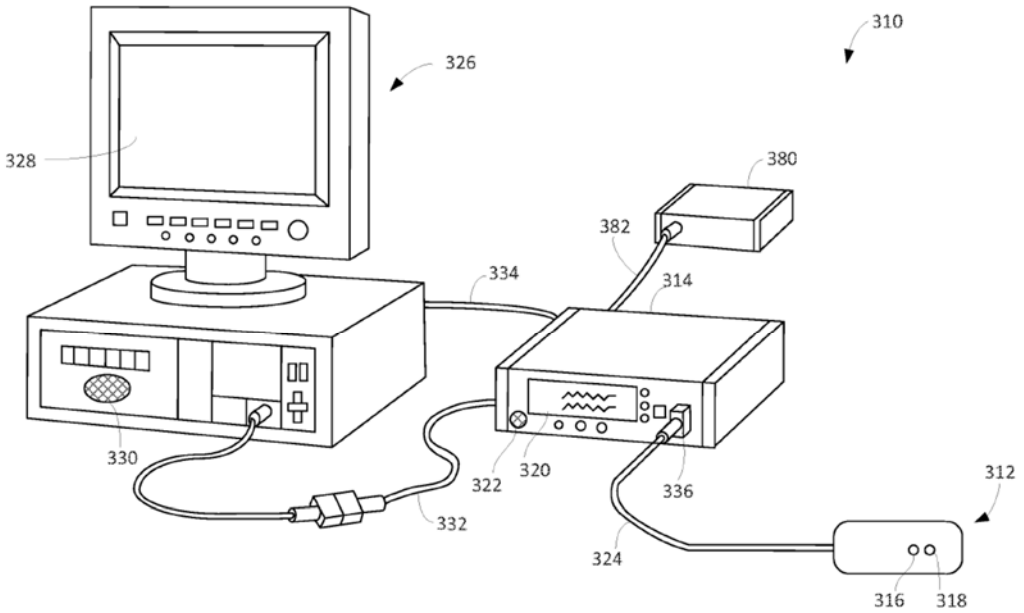

FIG. 3

Figure 3's system may include one or more components of Figure 1's system, specifically monitor 314 may be implemented as monitor 104.[6] Lisogurski, 17:30-35, 18:13-14. Sensor 312 and monitor 314 include similar configurations as sensor 102 and monitor 104, respectively. *See* Lisogurski, at 17:37-62, 18:3-10, 19:25-27. '533-FWD, 13-15; '484-FWD, 13-15. Anthony, ¶86.

Monitor 314 "may communicate wirelessly" with MPPM 326. Lisogurski, 18:58-65. MPPM 326 "calculate[s] physiological parameters and...provide a display

[6] A POSITA would have understood that Figure 3 is an exemplary application of the embodiment shown in Figure 1, and that the disclosures in Figure 3 apply to the corresponding components or features in Figure 1. Anthony, ¶¶85-86.

328 for information from monitor 314," and is "coupled to a network to enable the sharing of information with servers or other workstations." Lisogurski, 18:49-52, 18:62-65. The remote network servers "determine physiological parameters," and display the parameters on a remote display, display 320 of monitor 314, or display 328 of MPPM 326. Lisogurski, 20:53-58. '533-FWD, 13-15; '484-FWD, 13-15. Anthony, ¶87.

Lisogurski discloses various methods for improving signal-to-noise ratio including: modulating the light drive signal with a "period the same as or closely related to the period of [a] cardiac cycle," using a dark subtraction process to remove noise from the ambient light, and varying light drive signal including drive current or light brightness, duty cycle, firing rate, and other suitable parameters. Lisogurski, 6:7-19, 9:46-60, 13:60-14:10, 16:33-54, 25:49-55. '533-FWD, 17; '484-FWD, 17-20. Anthony, ¶88.

2. Motivation to Modify Lisogurski

As the Board found in the prior '533-IPR, a POSITA would have been motivated to modify **Lisogurski's** physiological monitoring system 100 to "relocat[e] **control circuitry 110**, **light drive circuitry 120**, and **front end processing circuitry 150** of monitor 104 to sensor 102." '533-FWD, 22-25 (including annotated Fig. 1 below); *see also* '484-FWD, 24-25 (discussing incorporating front end processing circuitry into sensor).

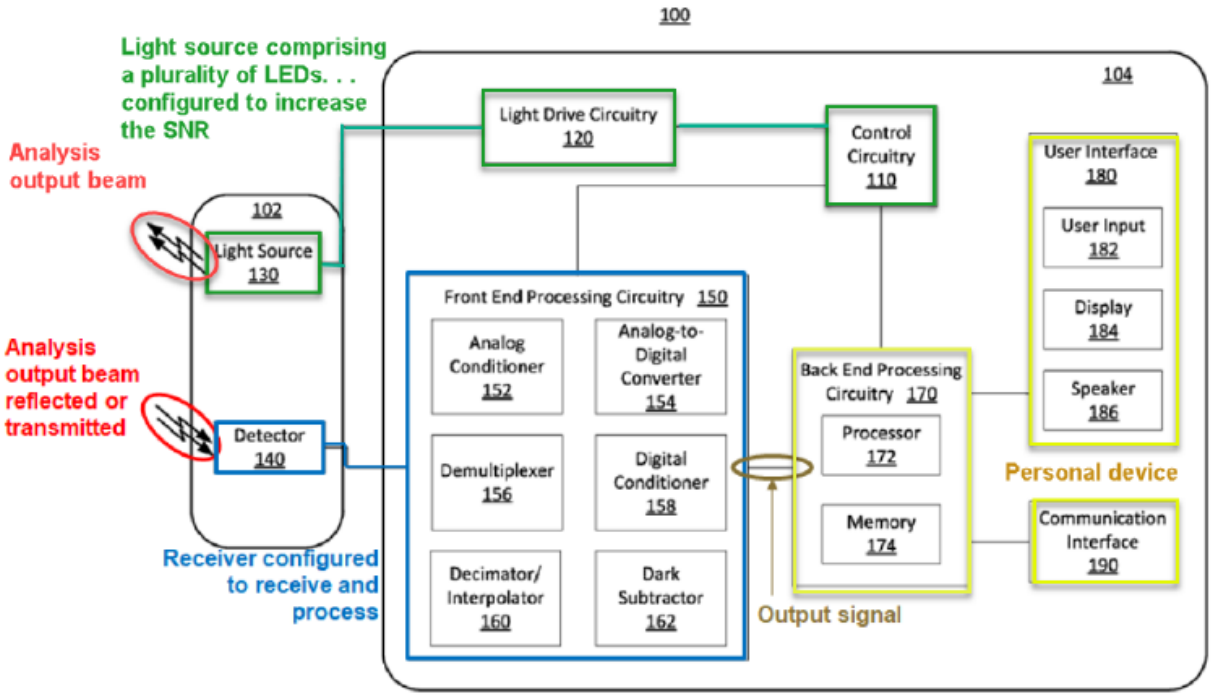

FIG. 1

As the Board found, "Lisogurski expressly suggests the modification by teaching embodiments in which 'the functionality of some of the components may be combined in a single component' and embodiments in which 'the functionality of some of the components of monitor 104…may be divided over multiple components.'" '533-FWD, 23 (quoting Lisogurski, 16:2-4, 16:7-9); *see also* '484-FWD, 24-25. As to the **control circuitry 110** and **light drive circuitry 120**, because they work together to output the electric current applied to the light source, a POSITA would have understood or at least found it obvious to include the circuitry in the same device as the **light source**. *See* '533-FWD, 23 (citing '533-Pet., 32-34). As to the **front end processing circuitry 150**, because it performs analog-to-digital

conversion and other initial processing of the signal, the Board also agreed that a POSITA would have understood or at least found it obvious to include it in the sensor where the signal is captured. *See* '533-FWD, 23-24 (citing '533-Pet., 47-48). Indeed, it was common for **light sources** to include **light drive circuitry and control circuitry**, and for a sensor to include a **front end processing circuitry**. *E.g.*, Exs.1036, 11:7-33 (signal processing circuitry integrated onto the same semiconductor chip as photodiode structure); 1034, 2:66-4:20, FIGS. 7-9 (photodetector with signal processing capability); 1035, 3:37-52, FIG. 2 (processing circuitry included into integrated smart sensor); 1031, 14:12-26, FIG. 18 (light driver circuit in probe); 1033, [0052], Fig. 4 (showing front end analog signal conditioning circuitry 330 in sensor 300); Anthony, ¶¶104-105. "[N]umerous industry trends motivate the modification," which "include improving the capabilities of wearable sensors for use in sports and personal fitness applications and wireless connecting wearable sensors to networks to remotely monitor patient health." '533-FWD, 23. Anthony, ¶¶89-106.

3. Claim Limitations

a. [7.pre] "An optical system, comprising:"

Lisogurski's "optical physiological monitoring system" meets [7.pre]. To meet a "**system** for measuring one or more physiological parameters" the Board relied on **Lisogurski's** disclosure of "an optical physiological monitoring system"

(including sensor 102/312 and monitor 104/314). ’484-FWD, 23, 26-27 (citing ’484-Pet., 27-28 (citing Lisogurski, 1:10-25, 3:43-46, 3:61-4:25, 15:30-35)); ’533-FWD, 25; *see also* Lisogurski, 17:55-59. Anthony, ¶¶108-113.

b. [7.a] “a wearable device for measuring one or more physiological parameters,”

Lisogurski’s sensor meets [7.a]. To meet “**a wearable** measurement **device for measuring one or more physiological parameters**” (’533 claim 13), the Board relied on **Lisogurski’s** disclosure that its sensor (e.g., sensor 102/312) (1) is “mounted on a user’s fingertip, toe, earlobe, wrist, or thigh” and (2) “may be used to determine physiological parameters such as blood oxygen saturation, hemoglobin, blood pressure, pulse rate, other suitable parameters, or any combination thereof.” ’533-FWD, 25 (citing ’533-Pet., 28 (citing Lisogurski, 4:6-20, 17:55-59) and Lisogurski, 4:6-8, 4:15-20, 17:55-59), 42-43; *see also* ’533-Pet., 29 (citing Lisogurski, 3:61-4:5, 4:22-25, 15:30-35); ’484-FWD, 23, 26-27. Anthony, ¶¶114-118.

c. [7.b] “the wearable device adapted to be placed on a wrist of a user;

Lisogurski’s sensor meets [7.b]. To meet “a **wearable device adapted to be placed on a wrist** or an ear **of a user**” (’484 claim 1), the Board relied on **Lisogurski’s** disclosure that its sensor (e.g., sensor 102/312) may be worn on various parts of a person’s body, including “the wrist to monitor radial artery

pulsatile flow." '484-FWD, 23, 26-27 (citing '484-Pet., 27-28 (citing Lisogurski, 4:6-20)); *see also* Lisogurski, 10:44-46, 17:30-36. Anthony, ¶¶119-122.

d. [7.c] "the wearable device including a light source comprising a plurality of semiconductor diodes that are configured to generate an output optical light having one or more optical wavelengths, wherein at least a portion of the one or more optical wavelengths is a near-infrared wavelength between 700 nanometers and 2500 nanometers;"

Lisogurski's sensor with light source meets [7.c]. To meet "**a light source comprising a plurality of semiconductor sources that are** light emitting diodes, the light emitting diodes **configured to generate an output optical** beam with **one or more optical wavelengths, wherein at least a portion of the one or more optical wavelengths is a near-infrared wavelength between 700 nanometers and 2500 nanometers,**" ('533 claims 5/13), the Board relied on **Lisogurski's** "[s]ensor 102/312 [] contain[ing] multiple LEDs that emit and direct light toward a subject's tissue, including an LED that emits red light, and an LED that emits infrared light having a wavelength between 800 and 1000 nm." '533-FWD, 25-26 (citing '533-Pet., 29-30 (citing Lisogurski, 4:42-45, 7:38-8:3, 10:48-52, 10:56-64, 17:37-45, 19:25-31, FIGS. 1 (130), 3 (316))); *see also* Lisogurski, 10:52-56; '484-FWD, 23, 26-27. It was well-known in the art that LEDs are semiconductors. *E.g.*, Ex.1039, 2:6-9 ("The LED is a semiconductor diode that emits incoherent narrow-spectrum light…."); Ex.1040, 5:11-14. And, a POSITA would have

understood that IR light with 800-1000nm of wavelength falls within the near-infrared region. Anthony, ¶¶123-127

e. [7.d] "the wearable device comprising one or more lenses configured to receive at least a portion of the output optical light and to deliver a lens output light to tissue comprising skin;"

Lisogurski's sensor discloses and renders obvious [7.d]. **Lisogurski's** "sensor 102" includes "LEDs" (Lisogurski, 10:48-56) and, to meet "**the wearable measurement device comprising** a plurality of **lenses configured to receive a portion of the output optical** beam **and to deliver** an analysis output beam to a sample" ('533 claims 5/13), the Board found that (1) a POSITA "would have known that LEDs are often covered by lensing encapsulants and would have selected such LEDs for [Lisogurski's] wireless sensor 102/312 in order to 'direct more of the light produced by the LED outward toward the tissue,' thereby improving the efficiency of wireless, battery-powered, sensor 102/312," and (2) knowing that "a lens is a 'basic building block' of an optical sensor" that a POSITA would have included lenses in Lisogurski's wireless sensor 102/312. '533-FWD, 35-36 (citing '533-Pet., 39-41 (citing Lisogurski, 7:38-8:3, 10:53-56, 19:25-31; Ex.1037, 97-98, 191-99, 266-67; Ex.1038, 765)); *see also* '484-FWD, 23, 26-27 (finding **Lisogurski** meets substantially identical limitation). Anthony, ¶¶128-135.

Lisogurski also discloses **tissue comprising skin** (*e.g.*, "fingertip, toe,

forehead, forehead, or earlobe, or…a foot"). For example, **Lisogurski** discloses its "light sensor [] is placed at a site on a patient, typically a fingertip, toe, forehead or earlobe, or in the case of a neonate, across a foot," and "a light source [] pass[es] light through blood perfused tissue and photoelectrically sense[s] the absorption of the light in the tissue." Lisogurski, 4:6-11; *see also* Lisogurski, 3:61-62, 4:31-45, 10:48-56, 11:13-25, 12:9-22, 17:37-42, 19:48-50, 22:58-60, 26:34-36. **Lisogurski** further discloses "Red and IR light emitting diodes (LEDs), for emitting light into the tissue of a subject to generate physiological signals," and that the resulting "red waveforms may be 25% of the intensity of the IR waveforms, as may occur in patients with dark skin pigmentation." Lisogurski, 10:52-56, 44:43-45. Anthony, ¶136.

f. [7.e] "the wearable device further comprising a detection system configured to receive at least a portion of the lens output light reflected from the tissue and to generate an output signal having a signal-to-noise ratio,"

Lisogurski's detector and front end processing circuitry meets [7.e]. To meet the same limitation, the Board relied on the modified embodiment of **Lisogurski** (§IX.B.2), specifically the "detection system in the form of a sensor with one or more detectors connected to front-end processing circuitry that may receive a detection signal, i.e., light that is reflected by or has traveled through the subject's tissue from detector 140, and provides processed signals, i.e., electrical signals based

on the intensity of the reflected light, to back-end circuitry 170." '484-FWD, 23-24, 26-27 (citing '484-Pet., 33-34 (citing Lisogurski, 11:9-10, 11:14-17; 11:20-27, 12:42-45, 17:40-42, FIGS. 1 (102), (140), 3 (312), (318))); *see also* '533-FWD, 37-39. The Board further noted that "the processed signals originate from detection signals that have a signal-to-noise ratio." '484-FWD, 23-24, 26-27 (citing '484-Pet., 33-34 (citing Lisogurski, 9:46-52, 11:20-27, 14:49-50)); *see also* '533-FWD, 37-39; Lisogurski, 11:41-46. Anthony, ¶¶137-143.

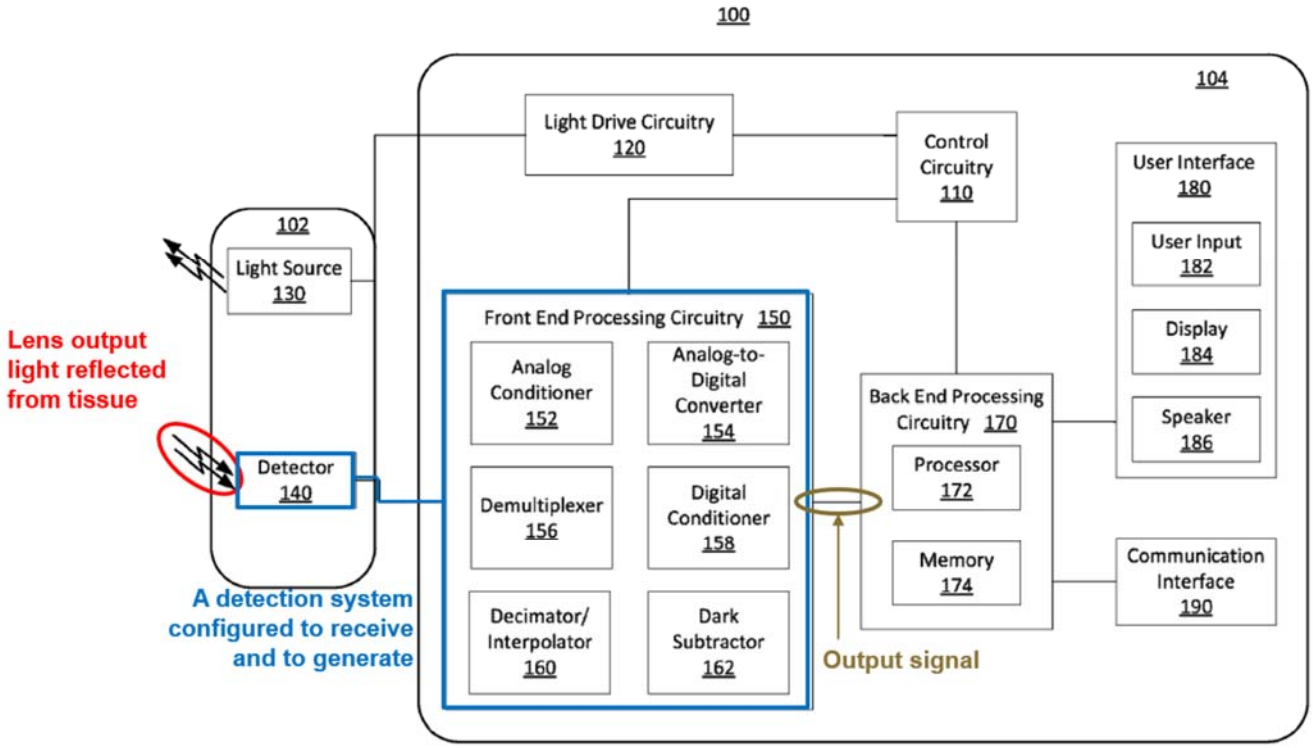

FIG. 1

g. [7.f] "wherein the detection system is configured to be synchronized to the light source;"

Lisogurski's front end processing circuitry meets[7.f].[7] To meet the same limitation, the Board relied on the modified embodiment of **Lisogurski** (§IX.B.2), specifically that "front end processing circuitry 150 operat[es] synchronously with light drive circuitry 120, e.g., by synchronizing the sampling rate of an analog to digital converter to a modulated LED firing rate to provide, e.g., one or more samples to be averaged per period." '484-FWD, 24-27 (citing '484-Pet., 34-35 (citing Lisogurski, 2:1-2, 11:41-46, 27:44-52, 33:47-49, 35:17-23, 35:25-31)); *see also* '533-FWD, 37-39; Lisogurski, 6:16-19, 11:50-54, 16:48-54, 16:67-17:2, FIG. 1. Anthony, ¶¶144-150.

[7] Regardless of the outer bounds of [7.f], its scope must at least include **Lisogurski's** disclosures as they correspond to the '790's embodiments covered by the limitation. '790, 44:19-23. Anthony, ¶¶151-153.

h. [7.g] "wherein the detection system comprises a plurality of detectors that are spatially separated from each other, and wherein at least one analog to digital converter is coupled to at least one of the plurality of detectors;"

Lisogurski's detector meets [7.g].[8] To meet "**wherein the detection system comprises a plurality of** spatially separated detectors**, and wherein at least one analog to digital converter is coupled to at least one of the** spatially separated **detectors**" ('484, claim 1), the Board relied on **Lisogurski's** disclosure of "[o]ne or more detector 318…for detecting the light that is reflected by…the subject's tissue" and that the sensor "may include multiple…detectors, which may be spaced apart." *See* '484-FWD, 25-27 (citing '484-Pet., 38-40 (citing Lisogurski, 11:9-10, 17:40-45, Figs. 1 (140), 3 (318)). The Board further relied on **Lisogurski's** disclosure that the electrical signals generated by the detectors are received by the front-end processing circuitry—including an analog-to-digital converter—and are passed between the components of the circuitry. *See* '484-FWD, 25-27 (citing '484-Pet., 38-40 (citing Lisogurski, 13:6-60, Figs. 1 (140), 3 (318)). Anthony, ¶¶154-157.

[8] Regardless of the outer bounds of the term "a plurality of detectors that are spatially separated from each other," its scope must at least include **Lisogurski's** disclosures as they correspond to the '790's embodiments covered by the limitation. '790, 27:50-28:22, Fig. 18B. Anthony, ¶¶158-160.

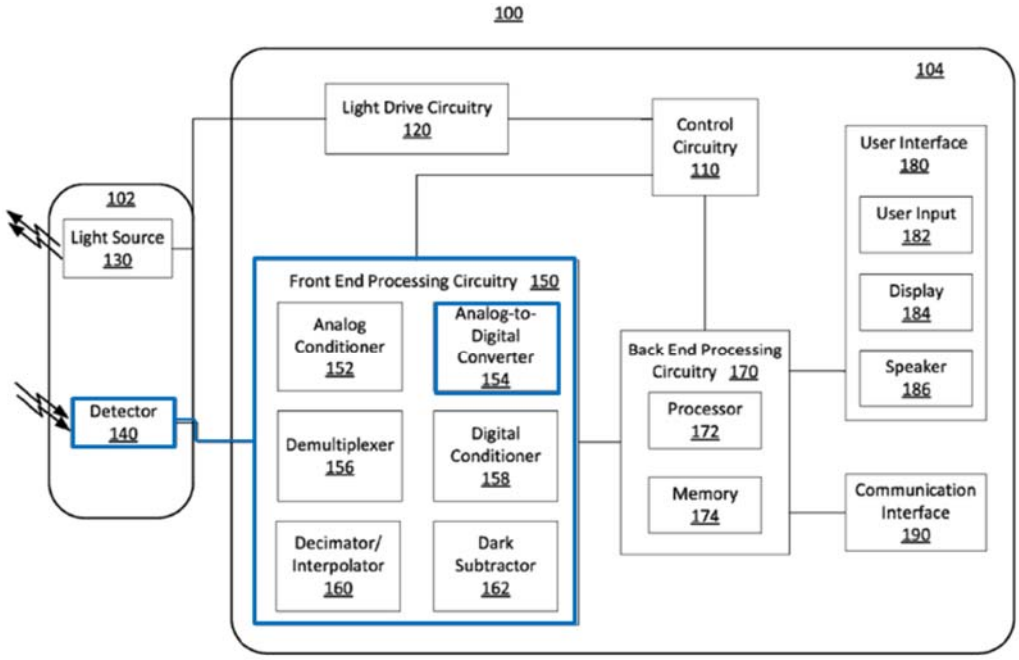

FIG. 1

i. [7.h] "wherein the output signal is indicative of the one or more of the physiological parameters;"

Lisogurski's data (i.e., an output signal, transmitted to a server, monitor, or remote device) meets [7.h]. To meet the same limitation, the Board relied on **Lisogurski's** disclosure "that data, i.e., an output signal transmitted to a server, monitor, or remote device may be stored or published, [and] that MPPM 326, is configured to calculate physiological parameters" based on the transmitted data such that the transmitted data is indicative of physiological parameter(s). '484-FWD, 26-27 (citing '484-Pet., 44 (citing Lisogurski, 18:49-53, 19:1-19, 20:8-13, 20:53-55, 26:55-60)); *see also* Lisogurski, 3:66-4:5 (measuring "various blood flow characteristics including, but not limited to, the oxygen saturation of hemoglobin in

arterial blood…" and "a patient's pulse rate and blood pressure"), 4:6-62, 12:9-16, 14:60-64, 17:59-67. Anthony, ¶¶161-165.

j. [7.i] "the wearable device configured to increase the signal-to-noise ratio by increasing light intensity of at least one of the plurality of semiconductor diodes from an initial light intensity; and"

Lisogurski's sensor meets [7.i]. To meet "**the wearable device configured to increase the signal-to-noise ratio by increasing light intensity of at least one of the plurality of semiconductor** sources **from an initial light intensity**" ('484, claim 1), the Board relied on **Lisogurski's** disclosures "that by increasing light intensity the system may increase the brightness of light sources in response to noise to improve signal to noise ratio," where "brightness (light intensity) [is] a parameter of the light drive signal, i.e., the signal that drives the LED" generated by light drive circuitry within sensor 102/312 as modified (§ IX.B.2). '484-FWD, 27 (citing '484-Pet., 45-48 (citing Lisogurski, 1:19-21, 1:44-46, 1:67-2:3, 5:55-6:6, 9:46-60, 10:48-49, 11:38-41, 11:50-54, 14:49-55, 25:49-55, 31:11-24, 31:39-55, 35:5-9, 37:6-22)); '533-FWD, 26. Anthony, ¶¶166-171.

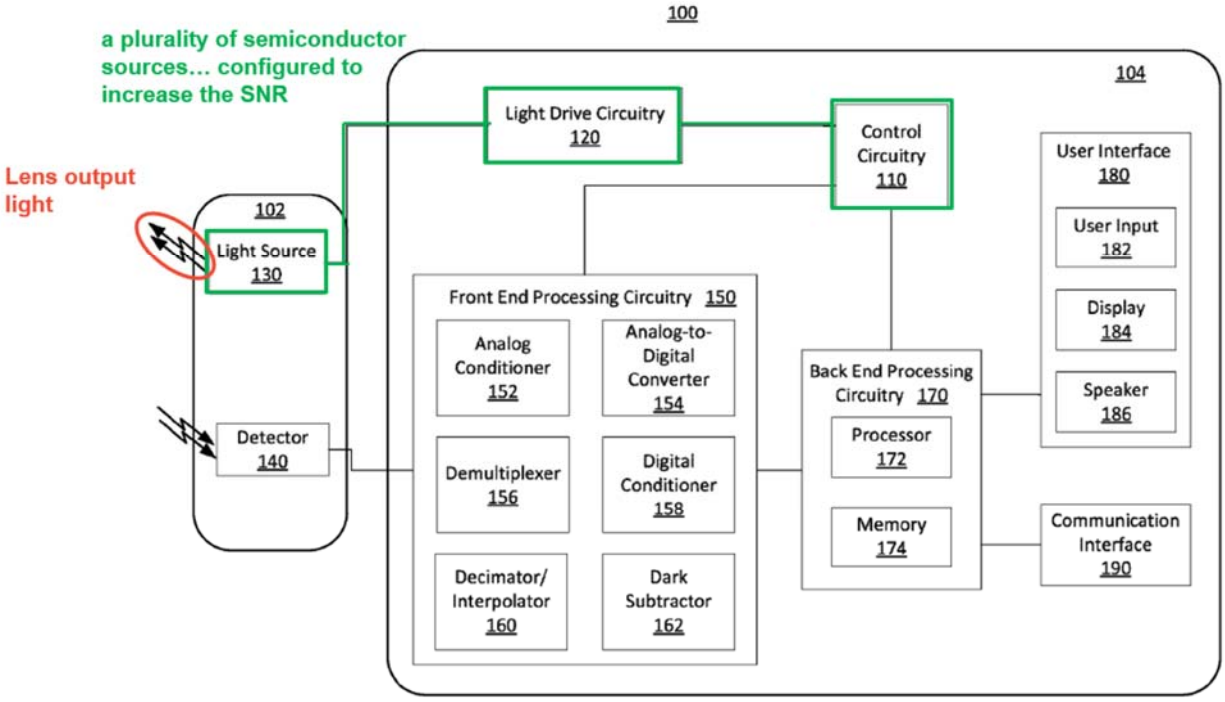

FIG. 1

k. [7.j] "the detection system further configured to: generate a first signal responsive to light received while the semiconductor diodes are off,"

Lisogurski's front end processing circuitry meets [7.j]. To meet "**the detection system further configured to: generate a first signal responsive to light received while the** light emitting diodes **are off**" ('484, claim 1), the Board relied on **Lisogurski's** disclosure of "front end processing us[ing] the current measured when the LEDs are off to generate a dark signal representative of ambient light." '484-FWD, 43-44 (citing '484-Pet. 54-55 (citing Lisogurski, 6:7-19, 11:14-16, 12:59-13:6, 13:35-41, 13:60-14:10, 16:33-54, FIGS. 2A-2B)). As discussed above in [7.c], LEDs are semiconductor diodes. Anthony, ¶¶172-175.

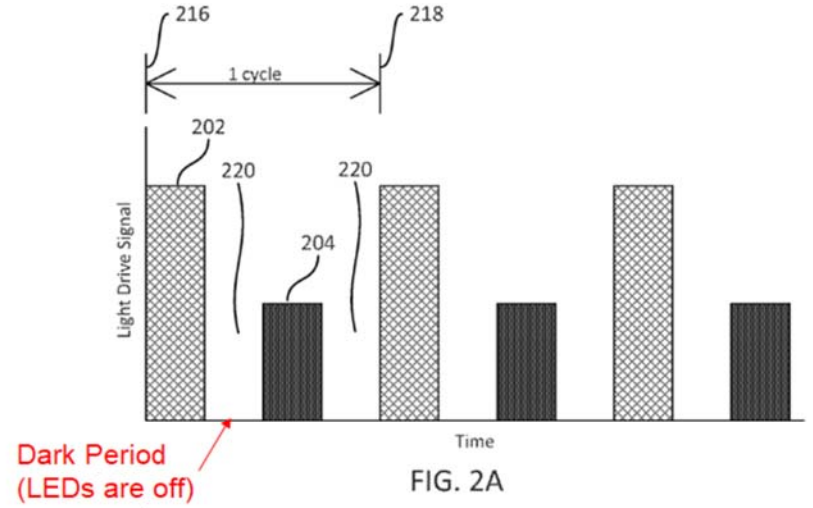

FIG. 2A

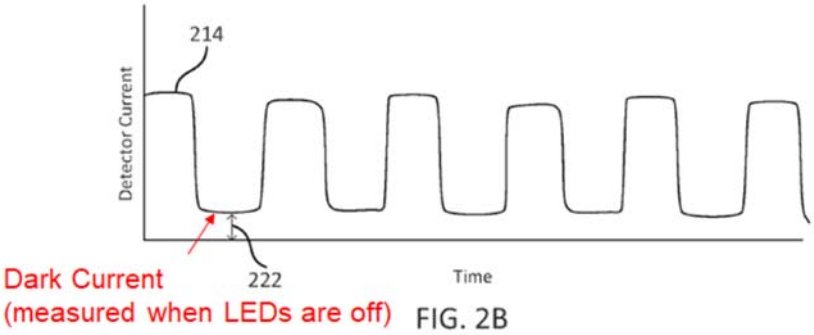

FIG. 2B

l. [7.k] "generate a second signal responsive to light received while at least one of the semiconductor diodes is on, and"

Lisogurski's front end processing circuitry meets [7.k]. To meet "**generate a second signal responsive to light received while at least one of the** light emitting diodes **is on**" ('484, claim 1), the Board relied on **Lisogurski's** disclosure of a "front end processing circuitry measuring the signal when at least one LED is on to capture a portion of the optical beam, e.g., a red signal and an IR signal, reflected from the tissue." '484-FWD, 43-44 (citing '484-Pet., 55-56 (citing Lisogurski, 6:12-19, 11:12-20, 12:52-13:6, 13:35-41, 13:67-14:2, 16:52-53, 17:8-10, 17:40-42,

FIGS. 2A-2B)). Anthony, ¶¶176-179.

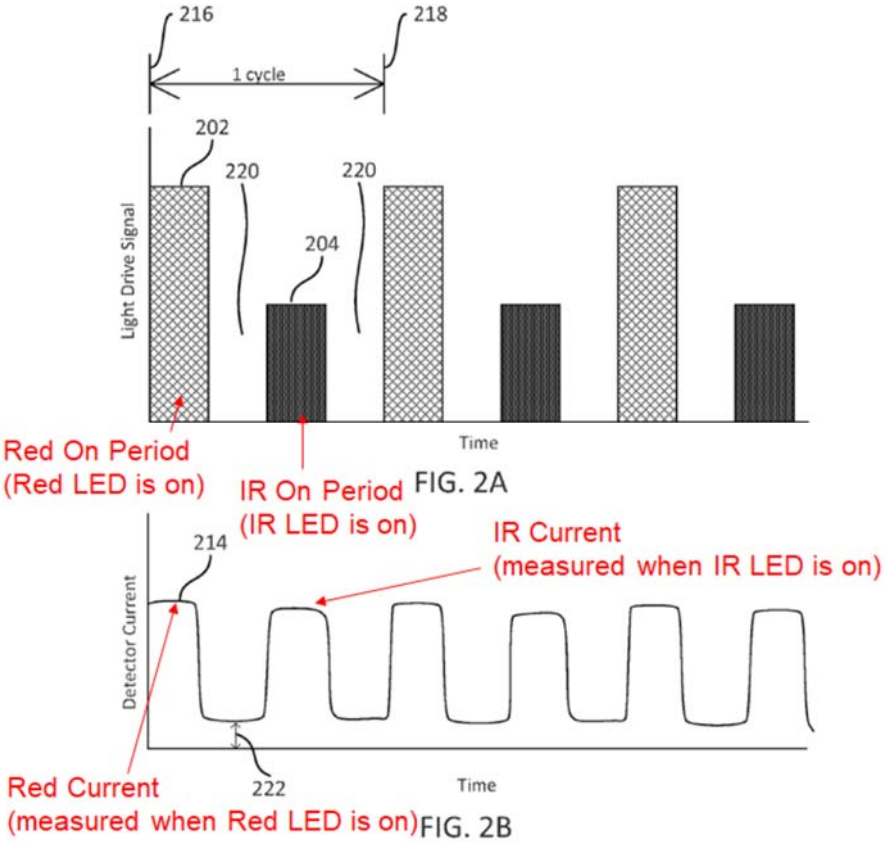

m. [7.l] "increase the signal-to-noise ratio by comparing the first signal and the second signal; and"

Lisogurski's front end processing circuitry meets [7.l].[9] To meet the same

[9] Regardless of the outer bounds of [7.l], its scope must at least include **Lisogurski's** disclosures as they correspond to the '790's embodiments covered by the limitation. '790, 58:24-45. Anthony, ¶¶183-185.

limitation,[10] the Board relied on **Lisogurski's** disclosure of a "dark subtraction" technique that "subtracts the dark signal from the red and IR signals to generate adjusted red and IR signals with noise removed, thereby improving signal-to-noise ratio." '484-FWD, 44 (citing '484-Pet., 54 57 (citing Lisogurski, 6:7-19, 13:60-14:10, 14:46-55, 16:33-54)). Anthony, ¶¶180-182.

n. [7.m] "wherein the wearable device is at least in part configured to identify an object."

Lisogurski's sensor meets [7.m].[11] The Board construed "to identify an object" to mean "to recognize or establish an object as being a particular thing."

---

[10] In the '484-IPR, the Board and Petition stated that the corresponding '484 limitation recited "increase the signal-to-noise ratio by ***differencing*** the first and second signals." '484-FWD, 43; '484-Pet., 57. However, the '484 limitation at issue actually recites "increase the signal-to-noise ratio by ***comparing*** the first signal and the second signal," as recited in [7.l] of '790. *See* '484-FWD, 6 ('484 limitation 1(o)). Regardless, this difference is immaterial. Anthony, ¶182.

[11] Regardless of the outer bounds of the term "wherein the wearable device is at least in part configured to identify an object," its scope must at least include **Lisogurski's** disclosures as they correspond to the '790's embodiments covered by the limitation. '790, 21:3-6. Anthony, ¶¶189-191.

'484-FWD at 8-10. To meet the same limitation, the Board found that **Lisogurski's** sensor 102/312 "calculat[es] an amount of a blood constituent, e.g., oxyhemoglobin" in a tissue sample, which involves distinguishing and identifying oxyhemoglobin in blood. '484-RFWD, 6 (citing '484-Pet.-Reply, 24); Lisogurski, 4:36-51. As the Board explained, "[a]s Lisogurski discloses a method of measuring oxygen saturation that uses different wavelengths to distinguish hemoglobin from oxygen carrying hemoglobin, i.e., oxyhemoglobin, Lisogurski teaches identifying an object, i.e., the blood constituent oxyhemoglobin." '484-RFWD, 4-7; Lisogurski, 4:36-62. Anthony, ¶¶186-188.

C. Ground 2: Lisogurski in further view of Carlson (claim 7)

1. Overview of Carlson

Carlson discloses an "optical pulsoximetry [device] for non-invasive measurement of pulsation and oxygen saturation in arterial human or animal blood." Carlson, [0002]; *see also* Carlson, [0033], [0049], Fig. 2.

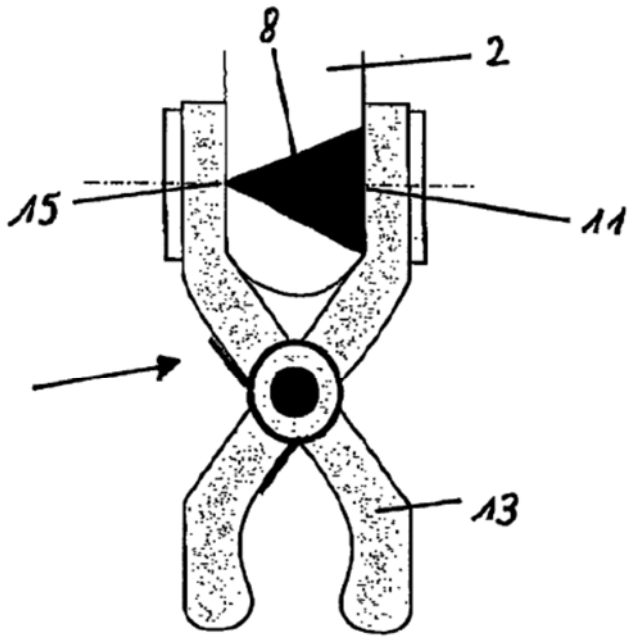

Figure 2

Carlson's ear clip sensor 1 includes light source 15, which transmits light beam 8 through a patient's earlobe 2, and light detector 11 to detect the transmitted light. Carlson, [0049]. Light source 15 emits light at two wavelengths, 660 and 890nm, and includes two LEDs. Carlson, [0050]. "[L]ight is emitted from the two LEDs 15 and is shaped by the two beam shaping elements or lenses 21 to be guided as beams 12 through the earlobe 2." Carlson, [0062]. '533-FWD, 18-20. Anthony, ¶¶192-193.

Carlson teaches that patient mobility can cause "signal instability and insufficient robustness versus environmental disturbances" including ambient light, such as sunlight, that "influenc[es] the measurement of the pulsoximeter sensor." Carlson, [0004], [0068]. **Carlson** teaches using a "beam-shaping element," such as lens, to direct the LED light source into tissue "to increase the optical signal power, detected by the pulsoximeter sensor, and thus increasing the Signal/Noise—and signal/Background ratio" by "a factor of 5." Carlson, [0014]. '533-FWD, 18-20. Anthony, ¶194.

2. Motivation to Combine

Lisogurski and **Carlson** are in the same field as the '790—including physiological monitoring—and are reasonably pertinent to the problems addressed by the '790—e.g., improving optical physiological monitoring. '790, 8:34-9:3; Lisogurski, 1:10-11, 9:46-60, 14:40-55, 26:5-14; Carlson, [0002], [0004], [0006]-[0008], [0010], [0054]. Anthony, ¶195.

As the Board found, "a [POSITA] would have incorporated Carlson's lenses 21 into Lisogurski's wireless sensor 102/312 to increase its optical signal power and signal-to-noise ratio without increasing its actual power." '533-FWD, 37. As the Board explained, **Carlson's** lenses 21 "increase the optical signal power without increasing the actual power used by the system," thereby "increasing the Signal/Noise...ratio" and "Lisogurski teaches the importance of both reducing power

consumption and increasing signal-to-noise ratio" such that a POSITA "would have incorporated Carlson's lenses 21 into Lisogurski's wireless sensor 102/312 to increase its optical signal power and signal-to-noise ratio without increasing its actual power." '533-FWD, 37; Carlson, [0010], [0014]; Lisogurski, 14:40-55, 37:6-20; *see also* '484-FWD, 23, 26-27. Anthony, ¶¶196-198.

A POSITA would have had a reasonable expectation of success in applying **Carlson's** teaching to **Lisogurski's** system. Both **Lisogurski** and **Carlson** teach optical physiological measurement systems utilizing LEDs as light sources, and using lenses to focus the light of LEDs was well-known in the art, such that a POSITA would have found it routine, straightforward, and advantageous to apply **Carlson's** lenses to **Lisogurski's** optical physiological measurement. Ex.1038, 765; Lisogurski, 1:10-11, 17:37-45, 10:48-56; Carlson, [0014], [0054]. Thus, a POSITA would have known such a combination (yielding the claimed limitations) would predictably work and provide the expected functionality. Anthony, ¶199.

3. Limitation [7.d]

As discussed (§IX.B.3.e.[7.d]), **Lisogurski** teaches and at least renders obvious the "lenses"/"lens" limitations in [7.d]. Anthony, ¶201.

To the extent additional disclosure is required for the "lens" limitations, as the Board already found, Carlson discloses lenses (*e.g.*, "lenses 21") **configured to receive at least a portion of the output optical light and to deliver**

a lens output light to tissue (e.g., "light…is shaped by…lenses 21 to be guided as beams 12 through the earlobe 2"). Carlson, [0002], [0010], [0013]-[0014], [0024], [0035], [0049], [0054], [0062]; Fig. 4; '484-FWD, 23, 26-27; '533-FWD, 36-37. As found in the '484 and '533-IPRs, **Carlson** discloses lenses 21 that "can be diffractive or refractive and direct the emitted optical radiation into human or animal tissue." '484-FWD, 23, 26-27 (citing '484-Pet., 31-33 (citing Carlson [0010], [0013]-[0014], [0024], [0054], [0062], Fig. 4); '533-FWD, 36-37; *see also* Carlson, [0002], [0035], [0049]. The Board further found a POSITA would have been motivated to apply **Carlson's** lens teachings to **Lisogurski** to increase optical signal power and signal-to-noise ratio without increasing its actual power. '484-FWD, 23 (citing '484-Pet., 32-33 (citing Carlson [0014], [0024], [0062] and Lisogurski, 6:3-6, 9:49-60, 13:60-14:10, 14:40-55, 37:6-20); §IX.C.2. Anthony, ¶¶202-207**.**

X. SECONDARY CONSIDERATIONS

There is no evidence in the '790's prosecution history or elsewhere supporting any secondary considerations arguments, or evidence of nexus to the Challenged Claim. *See generally* '790FH; Anthony, ¶208. Indeed, as demonstrated by the prior art referenced herein, any purported solutions to problems or unexpected results in the '790 were already well-known. Anthony, ¶208.

To the extent that PO contends that the accused products in the Texas Case are infringing and thus demonstrate commercial success, any such conclusory

allegations would fail to provide any indication that the Claim is non-obvious. Such conclusory assertions would not demonstrate that Petitioners' products infringe, let alone show any nexus between any alleged commercial success and the Claim, or that any alleged success is due to an allegedly claimed component instead of the many unclaimed features of the accused products.

To the extent PO asserts the existence of any secondary considerations in its responses, Petitioners reserve the right to address any such evidence. Anthony, ¶209.

XI. CONCLUSION

Substantial, new, and noncumulative technical teachings have been presented for each Challenged Claim, which are rendered obvious for the reasons set forth above. Anthony, ¶¶71-207. It is more likely than not Petitioners will prevail as to the Claim. Post Grant review of Claim 7 of the '790 is accordingly requested.

Dated: August 5, 2025

Respectfully submitted,

By: /*James L. Davis, Jr.*/
Name: James L. Davis, Jr.
Registration No. 57,325
ROPES & GRAY LLP

Lead Counsel for Petitioners

CERTIFICATE OF COMPLIANCE

Pursuant to 37 C.F.R. § 42.24(a) and (d), the undersigned hereby certify that the Petition for Post Grant Review complies with the type-volume limitation of 37 C.F.R. § 42.24(a)(1)(ii) because, exclusive of the exempted portions, it contains 7,476 words as counted by the word processing program used to prepare the paper.

Dated: August 5, 2025

Respectfully submitted,

By: /*James L. Davis, Jr.*/
Name: James L. Davis, Jr.
Registration No. 57,325
ROPES & GRAY LLP

Lead Counsel for Petitioners

CERTIFICATE OF SERVICE

I hereby certify that on August 5, 2025, I caused a true and correct copy of the foregoing Petition for Post Grant Review of U.S. Patent No. 12,193,790 and supporting exhibits to be served via Federal Express on the Patent Owner at the following correspondence address of record as listed on Patent Center:

109543 - Brooks, Kushman P.C./Cheetah Omni MedSci
150 W 2nd St., Suite 400N
Royal Oak, MI 48067
UNITED STATES

_____

A courtesy copy was also sent via electronic mail to Patent Owner's litigation counsel at the following addresses:

William E. Davis III
bdavis@davisfirm.com
DAVIS FIRM, PC

Daniel S. Stringfield
dstringfield@nixonpeabody.com
Timothy P. Maloney
tmaloney@nixonpeabody.com
Daniel D. Georgiev
dgeorgiev@nixonpeabody.com
Peter Krusiewicz
pkrusiewicz@nixonpeabody.com
NIXON PEABODY LLP

Corey T. Leggett

cleggett@nixonpeabody.com
NIXON PEABODY LLP

Elizabeth M. Chiaviello
echiaviello@nixonpeabody.com
Benjamin R. Holt
bholt@nixonpeabody.com
NIXON PEABODY LLP

Dated: August 5, 2025

By: /*James L. Davis, Jr.*/
Name: James L. Davis, Jr.
Registration No. 57,325
Lead Counsel for Petitioners