UNITED STATES PATENT AND TRADEMARK OFFICE

BEFORE THE PATENT TRIAL AND APPEAL BOARD

WHOOP, INC.,
Petitioner

v.

OMNI MEDSCI, INC.,
Patent Owner.

Case No. IPR2025-01585

U.S. Patent No. 11,160,455

Petition for *Inter Partes* Review of U.S. Patent No. 11,160,455

TABLE OF CONTENTS

Page

I. INTRODUCTION 1
II. MANDATORY NOTICES 3
A. Real Party-in-Interest 3
B. Related Matters 3
C. Lead and Backup Counsel 7
D. Service Information 8
III. PAYMENT OF FEES 8
IV. REQUIREMENTS OF *INTER PARTES* REVIEW 8
A. Standing 8
B. Identification of Challenge and Relief Requested 9
1. Lisogurski 9
2. Carlson 10
3. Soller 10
4. Tran 10
5. Valencell-093 11
6. Grounds 11
C. How the Challenged Claims Are to Be Construed Under 37 C.F.R. § 42.104(b)(3) 11
D. How the Challenged Claims Are Unpatentable Under 37 C.F.R. § 42.104(b)(4) 12
E. Supporting Evidence Under 37 C.F.R. § 42.104(b)(5) 12
V. THRESHOLD REQUIREMENT FOR *INTER PARTES* REVIEW 12
VI. PATENT OVERVIEW 13
A. Person of Ordinary Skill in the Art 13
B. State of the Art 13
1. Photoplethysmography 14
2. Market Trends for Wearable Sensors 15

C. Alleged Invention of The ’455 Patent 18
D. Prosecution History of The ’455 Patent 19
VII. GROUNDS OF UNPATENTABILITY 20
A. Collateral Estoppel 20
B. Ground 1: Claims 1-4, 8-11, and 15-16 would have been obvious over Lisogurski in view of Carlson and Soller. 21
1. Overview of Ground 1 22
a) Lisogurski 22
b) Carlson 23
c) Soller 24
2. Motivation to Combine 25
3. Analysis of Ground 1 29
a) Claim 1[pre], 8[pre], 15[pre] 29
b) Claim 1[a], 8[a], 15[a] 29
c) Claim 1[b], 8[b], 15[b] 33
d) Claim 1[c], 8[c], 15[c] 37
e) Claim 1[d], 8[d], 15[d] 42
f) Claim 1[e], 8[e], 15[e] 43
g) Claim 1[f], 8[f], 15[f] 47
h) Claim 1[g], 8[g], 15[g] 48
i) Claim 1[h], 8[h], 15[h] 49
j) Claim 1[i], 8[i], 15[i] 51
k) Claim 1[j], 8[j], 15[j] 53
l) Claim 1[k], 10 54
m) Claim 2, 15[k], 8[k], 9 56
n) Claim 3, 15[l] 61
o) Claim 4 63
p) Claim 11 65
q) Claim 16 65

C. Ground 2: Claims 5 and 12 would have been obvious over Lisogurski in view of Carlson, Soller, and Tran. 65
1. Overview of Ground 2 66
a) Tran 66
b) Motivation to combine 66
2. Analysis of Ground 2 68
a) Claim 5[a], 12[a] 68
b) Claim 5[b], 12[b] 69
D. Ground 3: Claim 17 would have been obvious over Lisogurski in view of Carlson, Soller, and Valencell-093. 71
1. Overview of Ground 3 71
a) Valencell-093 71
b) Motivation to combine 72
2. Analysis of Ground 3 73
a) Claim 17 73
E. Ground 4: Claims 6, 7, 13, 14, and 18-20 would have been obvious over Lisogurski in view of Carlson, Soller, Tran, and Valencell-093. 76
1. Overview of Ground 4 76
a) Motivation to Combine 76
2. Analysis of Ground 4 77
a) Claim 6, 13 77
b) Claim 18[a], 18[b] 77
c) Claim 19 78
d) Claim 7, 14, 20 79
VIII. SECONDARY CONSIDERATIONS 82
IX. CONCLUSION 83
APPENDIX A: CHALLENGED CLAIM LISTING 84

TABLE OF AUTHORITIES

Page(s)

Cases

Apple Inc. v. Omni MedSci, Inc.,
IPR2019-00916, Paper No. 39 (P.T.A.B. Oct. 14, 2020) 4

Apple Inc. v. Omni MedSci, Inc.,
IPR2021-00453, Patent Owner's Notice of Appeal (P.T.A.B. Apr. 11, 2025) 4, 5

Apple Inc. v. Omni MedSci, Inc.,
No. 23-1034, 2024 WL 3084509 (Fed. Cir. Jun. 21, 2024) 5

Google LLC v. Hammond Dev. Int'l,
54 F.4th 1377 (Fed. Cir. 2022) 20, 21, 25

HTC Corp. v. Cellular Commc'ns Equip., LLC,
877 F.3d 1361 (Fed. Cir. 2017) 12

Kennametal, Inc. v. Ingersoll Cutting Tool Co.,
780 F. 3d 1376 (Fed. Cir. 2015) 45

Ohio Willow Wood Co. v. Alps S., LLC,
735 F.3d 1333 (Fed. Cir. 2013) 21

Omni MedSci, Inc. v. Apple Inc.,
No. 21-1229, 2022 WL 2062168 (Fed. Cir. Jun. 8, 2022) 4

Omni MedSci, Inc. v. Apple Inc.,
No. 25-1646 (Fed. Cir.) 5

Omni MedSci, Inc. v. Apple Inc.,
No. 4:19-cv-05924 (N.D. Cal.) 4

Omni MedSci, Inc. v. Samsung Elecs., et al.,
No. 2:24-cv-01070 (E.D. Tex.) 3

Omni MedSci, Inc. v. WHOOP, Inc.,
No. 1:25-cv-00140 (D. Del.) 3, 4

Papst Licensing GmbH & Co. KG v. Samsung Elecs. Am., Inc.,
924 F.3d 1243 (Fed. Cir. 2019) 2, 20

POSCO Co., Ltd. v. ArcelorMittal,
IPR2025-00370, Paper No. 10 (P.T.A.B. Jun. 25, 2025) 2

Samsung Elecs. Co. et al. v. Omni MedSci, Inc.,
IPR2025-01250, Paper No. 1 (P.T.A.B. Aug. 5, 2025) 6

Samsung Elecs. Co. et al. v. Omni MedSci, Inc.,
IPR2025-01251, Paper No. 1 (P.T.A.B. Aug. 5, 2025) 6

Samsung Elecs. Co. et al. v. Omni MedSci, Inc.,
IPR2025-01252, Paper No. 1 (P.T.A.B. Aug. 5, 2025) 5

Samsung Elecs. Co. et al. v. Omni MedSci, Inc.,
IPR2025-01253, Paper No. 1 (P.T.A.B. Aug. 5, 2025) 6

Samsung Elecs. Co. et al. v. Omni MedSci, Inc.,
IPR2025-01254, Paper No. 1 (P.T.A.B. Aug. 5, 2025) 6

Samsung Elecs. Co. et al. v. Omni MedSci, Inc.,
PGR2025-00063, Paper No. 1 (P.T.A.B. Aug. 5, 2025) 6

Samsung Elecs. Co. et al. v. Omni MedSci, Inc.,
PGR2025-00064, Paper No. 1 (P.T.A.B. Aug. 5, 2025) 6

Samsung Elecs. Co., Ltd. v. Netlist, Inc.,
IPR2025-00002, Paper 17 (P.T.A.B. May 15, 2025) 20

Soverain Software LLC v. Victoria's Secret Direct Brand Mgmt.,
LLC, 778 F.3d 1311 (Fed. Cir. 2015) 21

United Therapeutics Corp. v. Liquidia Techs., Inc.,
74 F.4th 1360 (Fed. Cir. 2023) 21

Statutes

35 U.S.C. § 102(a) 9, 10, 11

35 U.S.C. § 102(b) 9, 10, 11

35 U.S.C. § 102(e) 9, 10, 11

35 U.S.C. § 103 ..... 1, 9, 11

35 U.S.C. § 282(b) 12

35 U.S.C. § 314(a) 12

35 U.S.C. § 315(e)(1) 8

Regulations

37 C.F.R. § 42.73(d)(3) 2

37 C.F.R. § 42.8(b) 7

37 C.F.R. § 42.10(a) 7

37 C.F.R. § 42.10(b) 8

37 C.F.R. § 42.10(c) 7

37 C.F.R. § 42.15(a) 8
37 C.F.R. § 42.63(e) 12
37 C.F.R. § 42.100(b) 12
37 C.F.R. § 42.103 8
37 C.F.R. § 42.104(a) 8
37 C.F.R. § 42.104(b) 9, 11, 12
83 F.R. 51358 (2018) 12

PETITIONERS' EXHIBIT LIST

Exhibit No.	Description
1001	U.S. Patent No. 11,160,455
1002	File History, U.S. Patent No. 11,160,455
1003	Declaration of Patrick Mercier, PhD
1004	U.S. Patent No. 9,651,533
1005	U.S. Patent No. 10,517,484
1006	Docket Sheet, *Omni MedSci, Inc. v. WHOOP, Inc.*, No. 1:25-cv-00140 (D. Del.)
1007	Docket Sheet, *Omni MedSci, Inc. v. Samsung Elecs.*, et al., No. 2:24-cv-01070 (E.D. Tex.)
1008	*Apple Inc. v. Omni MedSci, Inc.*, IPR2019-00916, Paper No. 39 (P.T.A.B. Oct. 14, 2020) (Final Written Decision, '533 IPR)
1009	*Omni MedSci, Inc. v. Apple Inc.*, No. 21-1229, 2022 WL 2062168 (Fed. Cir. Jun. 8, 2022) (summary affirmance, '533 IPR)
1010	Apple Inc. v. Omni MedSci, Inc., IPR2021-00453, Patent Owner's Notice of Appeal (P.T.A.B. Apr. 11, 2025)
1011	*Apple Inc. v. Omni MedSci, Inc.*, IPR2021-00453, Paper No. 22 (P.T.A.B. Aug. 3, 2022) (First Final Written Decision, '484 IPR)
1012	*Apple Inc. v. Omni MedSci, Inc.*, No. 23-1034, 2024 WL 3084509 (Fed. Cir. Jun. 21, 2024) (First Federal Circuit Decision, '484 IPR)
1013	*Apple Inc. v. Omni MedSci, Inc.*, IPR2021-00453, Paper No. 26 (P.T.A.B. Feb. 14, 2025) (Second Final Written Decision, '484 IPR)
1014	Docket Sheet, *Omni MedSci, Inc. v. Apple Inc.*, No. 25-1646 (Fed. Cir.) (Docket Sheet, Second Federal Circuit Appeal, '484 IPR)
1015	*Apple Inc. v. Omni MedSci, Inc.*, IPR2019-00916, Paper No. 1 (P.T.A.B. Apr. 10, 2019) (Petition, '533 IPR)
1016	RESERVED
1017	*Apple Inc. v. Omni MedSci, Inc.*, IPR2019-00916, Paper No. 16, (P.T.A.B. Oct. 18, 2019) (Institution Decision, '533 IPR)
1018	*Apple Inc. v. Omni MedSci, Inc.*, IPR2019-00916, Paper No. 23 (P.T.A.B. Jan. 31, 2020) (Patent Owner Response)

Exhibit No.	Description
1019	RESERVED
1020	RESERVED
1021	*Apple Inc. v. Omni MedSci, Inc.*, IPR2021-00453, Paper No. 1, (P.T.A.B. Jan. 22, 2021) (Petition, '484 IPR)
1022	RESERVED
1023	*Apple Inc. v. Omni MedSci, Inc.*, IPR2021-00453, Paper No. 7 (P.T.A.B. Aug. 6, 2021) (Institution Decision, '484 IPR)
1024	*Apple Inc. v. Omni MedSci, Inc.*, IPR2021-00453, Paper No. 10 (P.T.A.B. Nov. 12, 2021) (Patent Owner Response, '484 IPR)
1025	RESERVED
1026	RESERVED
1027	U.S. Patent No. 9,241,676 (Lisogurski)
1028	U.S. Patent App. Pub. No. 2005/0049468 ("Carlson")
1029	RESERVED
1030	U.S. Patent No. 6,304,767 ("Soller")
1031	U.S. Patent No. 8,108,036 ("Tran")
1032	U.S. Patent Appl. Pub. No. 2012/0197093 ("Valencell-093")
1033	"The Biomedical Engineering Handbook," by Joseph D. Bronzino (1995)
1034	Patel, et al., A review of wearable sensors and systems with application rehabilitation, *Journal of Neuroengineering & Rehabilitation* (2012)
1035	A. Omre, Bluetooth Low Energy: Wireless Connectivity for Medical Monitoring, *Journal of Diabetes Science & Technology* (Mar. 2010)
1036	P. Baum, et al., Strategic Intelligence Monitor on Personal Health Systems, Phase 2: Market Developments - Remote Patient Monitoring and Treatment, Telecare, Fitness/Wellness and mHealth, JRC *Scientific and Policy Reports of European Commission* (2013)
1037	M. Kranz, et al., The mobile fitness coach: Towards individualized skill assessment using personalized mobile devices, *Pervasive and Mobile Computing* (June 2012)
1038	M. Swan, Senior Mania! The Internet of Things, Wearable Computing, Objective Metrics, and the Quantified Self 2.0, *Journal of Sensor and Actuator Networks* (2012)

Exhibit No.	Description
1039	RESERVED
1040	"The Usage of Tablets in the HealthCare Industry," by Rauf Adil (Aug. 2, 2012), available through the Internet Archive at https://web.archive.org/web/20121014002306/https://www.healthcareitnews.com/blog/usage-tablets-healthcare-industry (last accessed Sept. 4, 2025)
1041	Remote Deposition of Duncan Leo MacFarlane, Ph.D., P.E., *Apple Inc. v. Omni MedSci, Inc.*, IPR2019-00916 (PTAB April 16, 2020)
1042	Curriculum Vitae of Patrick Mercier, PhD
1043	Docket Sheet, *Omni MedSci, Inc. v. Apple Inc.*, No. 4:19-cv-05924 (N.D. Cal.)
1044	RESERVED
1045	Webster, J. G. (1997) Design of Pulse Oximeters, IOP Publishing.
1046	RESERVED
1047	RESERVED
1048	RESERVED
1049	RESERVED
1050	*Samsung Elecs. Co. et al. v. Omni MedSci, Inc.*, IPR2025-01250, Paper No. 1 (P.T.A.B. Aug. 5, 2025) (533 IPR Petition)
1051	*Samsung Elecs. Co. et al. v. Omni MedSci, Inc.*, IPR2025-01251, Paper No. 1 (P.T.A.B. Aug. 5, 2025) (304 IPR Petition)
1052	*Samsung Elecs. Co. et al. v. Omni MedSci, Inc.*, IPR2025-01252, Paper No. 1 (P.T.A.B. Aug. 5, 2025) (455 IPR Petition)
1053	*Samsung Elecs. Co. et al. v. Omni MedSci, Inc.*, IPR2025-01253, Paper No. 1 (P.T.A.B. Aug. 5, 2025) (790 IPR Petition)
1054	*Samsung Elecs. Co. et al. v. Omni MedSci, Inc.*, PGR2025-00064, Paper No. 1 (P.T.A.B. Aug. 5, 2025) (790 PGR Petition)
1055	*Samsung Elecs. Co. et al. v. Omni MedSci, Inc.*, IPR2025-01254, Paper No. 1 (P.T.A.B. Aug. 5, 2025) (475 IPR Petition)
1056	*Samsung Elecs. Co. et al. v. Omni MedSci, Inc.*, IPR2025-00063, Paper No. 1 (P.T.A.B. Aug. 5, 2025) (475 PGR Petition)
1057	U.S. Patent No. 10,874,304

Exhibit No.	Description
1058	RESERVED
1059	U.S. Patent No. 12,193,790
1060	U.S. Patent No. 12,268,475
1061	RESERVED

I. INTRODUCTION

WHOOP, Inc. ("Petitioner" or "WHOOP") petitions for *inter partes* review of U.S. Patent No. 11,160,455 (EX1001), assigned to Omni MedSci, Inc. ("Omni" or "Patent Owner"), and seeks cancellation of claims 1-20 ("the Challenged Claims") because they are unpatentable under 35 U.S.C. § 103.

The Challenged Claims are nearly identical to those the Board found unpatentable following IPRs of two related (parent) patents of the '455 patent (U.S. Patent Nos. 9,651,533 (the "'533 patent") (EX1004) and 10,517,484 (the "'484 patent") (EX1005)). Those prior IPRs asserted four of the five prior art references asserted in this Petition. Not a single challenged claim in those parent patents (claims 1-23 of the '484 patent and claims 5, 7, 10, 13 and 15-17 of the '533 patent) withstood IPR. And the Federal Circuit has affirmed the unpatentability of all but a handful of these related claims (Omni's appeal as to claims 3-6 and 8-14 of the '484 patent remains pending).

Notably, in the related IPRs, Omni did not dispute that the prior art disclosed nearly all of the claims' limitations, nor did Omni challenge motivation to combine the majority of the asserted prior art references (which, again, significantly overlap with the prior art references in this Petition). Thus, based on Omni's positions in the related IPRs and the significant overlap of the Challenged Claims with the claims at issue in those IPRs, Omni has all but conceded the Challenged Claims are

unpatentable and is collaterally estopped from challenging the majority of the Challenged Claims' limitations.

Yet despite the unfavorable rulings Omni received in the related IPRs (including two adverse Federal Circuit decisions) and despite being "precluded from taking action inconsistent with [an] adverse judgment," 37 C.F.R. 42.73(d)(3), Omni continues to assert the '455 Patent (and even the parent patents that received the unfavorable IPR decisions) in district court litigation. The Board must prevent Omni from enforcing (and obtaining) claims that are "not patentably distinct" from the unpatentable claims of the '533 and '484 patents. *Id.*; *see also Papst Licensing GmbH & Co. KG v. Samsung Elecs. Am., Inc.*, 924 F.3d 1243, 1252-53 (Fed. Cir. 2019) (holding that issue preclusion prevents a patentee from raising arguments previously rejected for related patents).

Instituting this Petition would be an efficient use of the Board's limited resources, given the significant overlap between the Challenged Claims and the nearly-identical ones the Board has already found unpatentable. *See POSCO Co., Ltd. v. ArcelorMittal*, IPR2025-00370, Paper No. 10 (P.T.A.B. Jun. 25, 2025) (denying discretionary denial based on a previous, successful IPR "invalidating all the claims of…a parent to the challenged patent"); *Papst*, 924 F.3d at 1252 ("given the heavy burdens [Patent Owner] placed on its adversaries, the Board, and th[e] court by waiting so long to abandon defense of the [previous] patent claims," the

patentee was "without a meaningful basis to argue for systemic efficiencies as a possible reason for an exception to issue preclusion").

Petitioner therefore respectfully requests the Board institute IPR proceedings and cancel the Challenged Claims.

II. MANDATORY NOTICES

A. Real Party-in-Interest

The real party-in-interest is WHOOP, Inc. No unnamed entity is funding, controlling, or directing this Petition, or otherwise has had an opportunity to control or direct this Petition or Petitioner's participation in any resulting IPR.

B. Related Matters

The '455 patent is the subject of multiple patent litigation suits brought by Patent Owner Omni MedSci, Inc., including against Petitioner:

- *Omni MedSci, Inc. v. WHOOP, Inc.*, No. 1:25-cv-00140 (D. Del.) (EX1006) (the "Delaware action"); and
- *Omni MedSci, Inc. v. Samsung Elecs., et al.*, No. 2:24-cv-01070 (E.D. Tex.) (EX1007) (the "Texas action").

In addition, as mentioned, the ’455 patent is a child of the related ’484 and ’533 patents through a series of continuations.[1]

- Omni asserted the ’533 and ’484 patents in previous litigations against Apple Inc. *See Omni MedSci, Inc. v. Apple Inc.*, No. 4:19-cv-05924 (N.D. Cal.) (EX1043).
- The ’533 patent was subject to IPR in *Apple Inc. v. Omni MedSci, Inc.*, IPR2019-00916, Paper No. 39 (P.T.A.B. Oct. 14, 2020) (EX1008) (the “’533 IPR”), in which the Board held all challenged claims (claims 5, 7-10, 13, and 15-17) unpatentable as obvious. The Federal Circuit affirmed. *Omni MedSci, Inc. v. Apple Inc.*, No. 21-1229, 2022 WL 2062168 (Fed. Cir. Jun. 8, 2022) (EX1009).
- The ’484 patent is the subject of an ongoing IPR before the Board, where all claims have been challenged as obvious. *See Apple Inc. v. Omni MedSci, Inc.*, IPR2021-00453, Patent Owner’s Notice of Appeal (P.T.A.B. Apr. 11, 2025) (EX1010) (the “’484 IPR”). The Board initially held that claims 1, 2, 7, and 15-23 are unpatentable as obvious, but that the Petitioner had not shown

[1] The ’533 patent is asserted in both the Delaware and Texas actions. The ’484 patent was recently dismissed from the Delaware action, but remains asserted in the Texas action. EX1004; EX1005.

claims 3-6 and 8-14 are unpatentable. *Id.*, Paper No. 22 (P.T.A.B. Aug. 3, 2022) (EX1011). Apple appealed as to claims 3-6 and 8-14,[2] and the Federal Circuit reversed and remanded for the Board to consider whether those claims are unpatentable as obvious under an alternative argument. *Apple Inc. v. Omni MedSci, Inc.*, No. 23-1034, 2024 WL 3084509 (Fed. Cir. Jun. 21, 2024) (EX1012). On remand, the Board held that claims 3-6 and 8-14 are unpatentable as obvious. IPR2021-00453, Paper No. 26 (P.T.A.B. Feb. 14, 2025) (EX1013). Thus, all claims of the '484 patent have been held unpatentable by the Board. Omni appealed the Board's remand decision as to claims 3-6 and 8-14, and the appeal remains pending. *Omni MedSci, Inc. v. Apple Inc.*, No. 25-1646 (Fed. Cir.) (EX1014).

Finally, the defendants in the pending Texas action have recently filed several IPR and PGR challenges against this patent family, including the '455 patent, listed below:

- *Samsung Elecs. Co. et al. v. Omni MedSci, Inc.*, IPR2025-01252, Paper No. 1 (P.T.A.B. Aug. 5, 2025) (EX1052) – challenging certain claims of the '455 patent

[2] Omni did not cross-appeal the claims held to be unpatentable (1, 2, 7, and 15-23).

- *Samsung Elecs. Co. et al. v. Omni MedSci, Inc.*, IPR2025-01250, Paper No. 1 (P.T.A.B. Aug. 5, 2025) (EX1050) – challenging certain claims of the ’533 patent
- *Samsung Elecs. Co. et al. v. Omni MedSci, Inc.*, IPR2025-01251, Paper No. 1 (P.T.A.B. Aug. 5, 2025) (EX1051) – challenging certain claims of U.S. Patent No. 10,87,304 (the “’304 patent”) (EX1057), a parent patent to the ’455 patent
- *Samsung Elecs. Co. et al. v. Omni MedSci, Inc.*, IPR2025-01253, Paper No. 1 (P.T.A.B. Aug. 5, 2025) (EX1053) – challenging certain claims of U.S. Patent No. 12,193,790 (the “’790 patent”) (EX1059), a child patent to the ’455 patent
- *Samsung Elecs. Co. et al. v. Omni MedSci, Inc.*, PGR2025-00064, Paper No. 1 (P.T.A.B. Aug. 5, 2025) (EX1054) – challenging certain claims of the ’790 patent
- *Samsung Elecs. Co. et al. v. Omni MedSci, Inc.*, IPR2025-01254, Paper No. 1 (P.T.A.B. Aug. 5, 2025) (EX1055) – challenging certain claims of U.S. Patent No. 12,268,475 (the “’475 patent”) (EX1060), a child patent to the ’455 patent
- *Samsung Elecs. Co. et al. v. Omni MedSci, Inc.*, PGR2025-00063, Paper No. 1 (P.T.A.B. Aug. 5, 2025) (EX1056) – challenging certain claims of the ’475 patent

C. Lead and Backup Counsel

Pursuant to 37 C.F.R. §§ 42.8(b)(3), 42.8(b)(4), and 42.10(a), (c), Petitioners provide the following designation of counsel:

Lead Counsel	Back-up Counsel
Jaysen S. Chung Reg. Number: 68,199 Gibson, Dunn & Crutcher LLP One Embarcadero Center, Suite 2600 San Francisco, CA 94111-3715 Tel: 415-393-8271 JSChung@gibsondunn.com	**First Back-Up Counsel** Brian Rosenthal (Notice of Intent to Designate Provisionally Recognized PTAB Attorney forthcoming) Gibson, Dunn & Crutcher LLP 200 Park Avenue New York, NY 10166-0193 Tel: 212-351-2339 BRosenthal@gibsondunn.com **Additional Backup Counsel** Y. Audrey Yang Reg. Number: 74,393 Gibson, Dunn & Crutcher LLP 2001 Ross Ave., Suite 2100 Dallas, TX 75201 Tel: 214-698-3215 AYang@gibsondunn.com

Petitioner respectfully provides notice that it will file a Notice of Intent to Designate a Provisionally Recognized PTAB Attorney as Back-up Counsel under 37 C.F.R. § 42.10(c)(2) for Brian Rosenthal. Petitioner will file the Notice 21 days

after service of this petition. Pursuant to 37 C.F.R. § 42.10(b), powers of attorney accompany this Petition.

D. Service Information

Service via hand delivery or postal mail may be made at the addresses of the lead and back-up counsel above. Petitioner consents to electronic service, and service at GDC-Omni-Whoop@gibsondunn.com.

III. PAYMENT OF FEES

Pursuant to 37 C.F.R. §§ 42.103 and 42.15(a), the required fee is being submitted herewith. The Office is authorized to charge any fee deficiency, or credit overpayment, to deposit account no. 50-1408. Any additional fees due in connection with this Petition may be charged to the foregoing account.

IV. REQUIREMENTS OF *INTER PARTES* REVIEW

A. Standing

Pursuant to 37 C.F.R. § 42.104(a), Petitioner certifies that the ’455 patent is available for IPR and that Petitioner is not barred from requesting an IPR on the grounds identified in this Petition. Specifically, Petitioner certifies that: Petitioner has not filed a civil action challenging the validity of the ’455 patent; this petition is filed not more than one year from February 7, 2025, the date on which the Petitioner was served with the complaint alleging infringement of the ’455 patent; the estoppel provisions of 35 U.S.C. § 315(e)(1) do not prohibit this IPR; and this petition is filed

after the later of (a) the date that is nine months after the date of the grant of the '455 patent or (b) the termination of any post-grant review of the '455 patent.

B. Identification of Challenge and Relief Requested

Pursuant to 37 C.F.R. § 42.104(b), Petitioner requests the Board institute IPR of claims 1-20 of the '455 patent under pre-AIA[3] 35 U.S.C. § 103 on the prior art references and grounds described below:

1. Lisogurski

U.S. Patent No. 9,241,676 ("Lisogurski") (EX1027) qualifies as prior art under 35 U.S.C. § 102(a), (b), and/or (e). Lisogurski was filed May 31, 2012, and published December 5, 2013. In the '533 IPR, the Board found Lisogurski to be prior art, and the Federal Circuit affirmed that decision in full. EX1008, 2, 3 n.3,

[3] The '455 patent claims priority to 2012 provisional applications. *Infra* §§VI.D. However, the '455 patent was prosecuted as an AIA patent, and the applicant acknowledged at least one claim lacks/lacked priority to 2012. EX1002, 254, 391-395. WHOOP therefore does not believe the '455 patent is entitled to a 2012 priority date, but for the purposes of this IPR only, assumes the earliest possible priority date of December 31, 2012. The analysis herein would not change if AIA law applies.

aff'd, EX1009. In the '484 IPR, Omni did not dispute Lisogurski is prior art to this patent family based on Lisogurski's filing date. EX1024, 8.

2. Carlson

U.S. Patent App. Pub. No. 2005/0049468 ("Carlson") (EX1028) qualifies as prior art under 35 U.S.C. § 102(a), (b), and/or (e). Carlson was filed September 3, 2003, and published March 3, 2005. In the '533 IPR, the Board found Carlson to be prior art, and the Federal Circuit affirmed. EX1008, 2-3, *aff'd*, EX1009. In the '484 IPR, Omni did not dispute Carlson is prior art to this patent family. EX1024, 8.

3. Soller

U.S. Patent No. 6,304,767 ("Soller") (EX1030) qualifies as prior art under 35 U.S.C. § 102(a), (b), and/or (e). Soller was filed December 1, 1999, and issued October 16, 2001. It therefore pre-dates references Omni has admitted (and the Federal Circuit has confirmed) are prior art to this patent family.

4. Tran

U.S. Patent No. 8,108,036 ("Tran") (EX1031) qualifies as prior art under 35 U.S.C. § 102(a), (b), and/or (e). Tran was filed June 18, 2009, and issued January 31, 2012. In the '484 IPR, Omni did not dispute Tran is prior art to this patent family, the Board considered it as such, and Omni did not cross-appeal that finding, which was therefore affirmed. EX1024, 8-10; EX1011; EX1012, n.2.

5. Valencell-093

U.S. Patent Appl. Pub. No. 2012/0197093 ("Valencell-093") (EX1032) qualifies as prior art under 35 U.S.C. § 102(a), (b), and/or (e). Valencell-093 was filed January 25, 2012, and published August 2, 2012. In the '484 IPR, Omni did not dispute Valencell-093 is prior art to this patent family, the Board considered it as such, and Omni did not cross-appeal that finding, which was therefore affirmed. EX1024, 8-10; EX1011; EX1012, n.2.

6. Grounds

In this IPR, Petitioner applies the above references and asserts the following grounds of rejection under 35 U.S.C. § 103:

Ground	Claims	Basis for Rejection
1	1-4, 8-9, 10-11, 15-16	Obvious over Lisogurski in view of Carlson and Soller
2	5, 12	Obvious over Lisogurski in view of Carlson, Soller, and Tran
3	17	Obvious over Lisogurski in view of Carlson, Soller, and Valencell-093
4	6-7, 13-14, 18- 20	Obvious over Lisogurski in view of Carlson, Soller, Tran, and Valencell-093

C. How the Challenged Claims Are to Be Construed Under 37 C.F.R. § 42.104(b)(3)

A claim subject to *inter partes* review "shall be construed using the same claim construction standard that would be used to construe a claim in a civil action

under 35 U.S.C. § 282(b)." 37 C.F.R. § 42.100(b) (November 13, 2018); 83 F.R. 51358 (2018). Petitioners do not believe any constructions impact the invalidity analyses set forth herein. *See HTC Corp. v. Cellular Commc'ns Equip., LLC*, 877 F.3d 1361, 1367-68 (Fed. Cir. 2017) (affirming the Board absent an express construction of a term).

D. How the Challenged Claims Are Unpatentable Under 37 C.F.R. § 42.104(b)(4)

The following sections explain how the Challenged Claims are unpatentable under the statutory grounds identified above, including where each element of the claim is found in the prior art patents or printed publications.

E. Supporting Evidence Under 37 C.F.R. § 42.104(b)(5)

The exhibit numbers of the supporting evidence relied upon and the relevance of the evidence to the Challenged Claims, including an identification of specific portions of the evidence that support the challenge, are provided below. The technical information and grounds for unpatentability are supported by the Declaration of Dr. Patrick Mercier (EX1003). A List of Exhibits is included in this paper pursuant to 37 C.F.R. § 42.63(e).

V. THRESHOLD REQUIREMENT FOR *INTER PARTES* REVIEW

Under 35 U.S.C. § 314(a), institution of IPR requires "a reasonable likelihood that the petitioners would prevail with respect to at least one of the claims challenged

in the petition." This petition meets this threshold for each ground of unpatentability.

VI. PATENT OVERVIEW

A. Person of Ordinary Skill in the Art

A person of ordinary skill in the art ("POSITA") at the time of the alleged invention (December 2012) would have had good working knowledge of optical sensing techniques and their applications, and familiarity with optical system design and signal processing techniques. EX1003 ¶25. The POSITA would have an undergraduate degree in engineering (electrical, mechanical, biomedical, or optical) or a related field of study, along with relevant experience studying or developing physiological monitoring devices (e.g., non-invasive optical biosensors) in industry or academia. *Id.* Lack of professional experience can be remedied by additional education, and vice versa. *Id.*

The Board adopted this definition in the related IPRs. EX1023, 7-8; EX1017, 8-9.

B. State of the Art

The following concepts were well-known and widely used by POSITAs by December 31, 2012. EX1003 ¶45. Given the overlap between the '455 Patent and the '484/'533 patents, the background below is adopted from Apple's '484/'533 IPR

petitions, so it has already been considered and accepted by the Board. *See* EX1021, 8-14; EX1015, 4-12.

1. Photoplethysmography

Photoplethysmography (PPG) is an optical sensing technique used in medical monitoring systems for decades. EX1003 ¶47; EX1033, 769-76, 1346-55. PPG works by shining light through a subject's tissue and measuring the light reflected back or transmitted through the tissue. EX1003 ¶47. Because different blood and tissue components (*e.g.*, hemoglobin) reflect different wavelengths of light, by measuring how much light is absorbed and how that amount changes over time, a PPG device can calculate the composition of the blood and tissue. EX1003 ¶47.

PPG systems use conventional optical components, like lenses, mirrors, filters, beam splitters, light sources, fiber optics, and detectors. EX1003, ¶46; EX1033, 764-66, 771. The figure below shows a typical PPG sensor: (1) light is directed onto a sample; (2) the sample reflects or transmits light back to the device; (3) a photodetector detects and filters the received light and then outputs a signal proportionate to the measured light intensity; and (4) analog-to-digital conversion and signal processing are performed on the signal to extract data. EX1003 ¶46; EX1033, 764-66. Portable PPG devices conventionally use light-emitting diodes (LEDs) as the light source because LEDs are small and have low power requirements. EX1003 ¶48; EX1033, 765, 771.

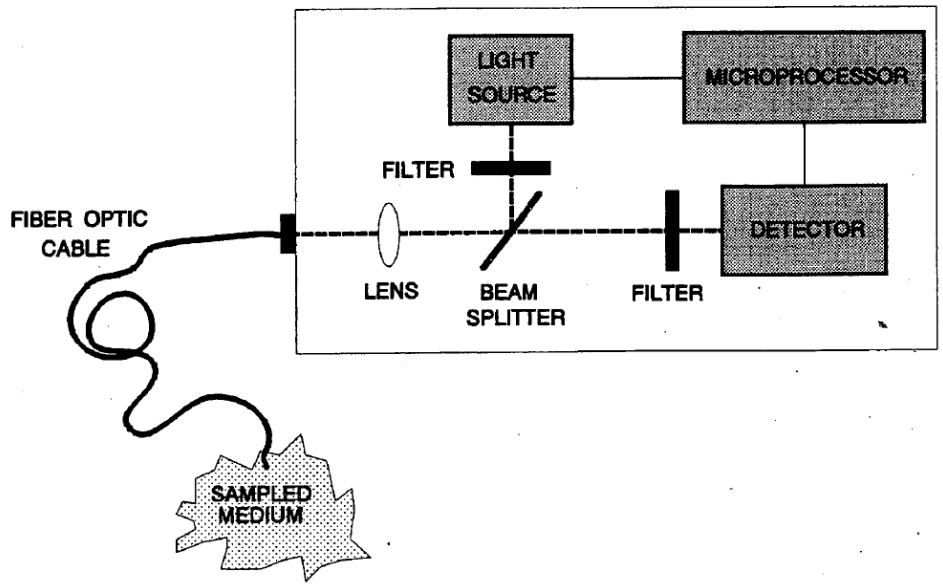

FIGURE 52.1 General diagram representing the basic building blocks of an optical instrument for optical sensor applications.

EX1033, 764-66.

To improve the signal-to-noise ratio (SNR) of the system, the light source is typically modulated and the detector typically uses "synchronized lock-in amplifier detection" techniques to isolate signals that occur at the modulation frequency, thereby reducing the amount of noise captured, and improving SNR. EX1003 ¶¶49-50; EX1033, 764-66.

2. Market Trends for Wearable Sensors

Market trends from 2000 to 2012 drove the medical device industry (and similar industries) to develop wearable sensors for measuring health data and communicating that data to remote devices. EX1003 ¶¶52-55. Four examples of such trends are described below.

First, the medical device industry developed wireless monitoring technologies that a patient could wear to allow transmission of medical data remotely to a physician. EX1003 ¶¶55-56; EX1034, 2; EX1035, 462; EX1036, 15-31.

Second, a market for commercial health and fitness devices emerged. EX1003 ¶¶52-54, 58-59. These devices, like "oximeters and heart rate monitors," were "formerly reserved for professional use," but by at least 2012 were "available" for consumers to "connect[] to smartphones." EX1037, 3; *see also* EX1028, [0004]; EX1038, 221; EX1032, [0003] ("growing market demand" for "personal health…monitors").

Third, the general market trend for miniaturizing electronics led to smaller, wearable monitoring systems with health and fitness applications. EX1003 ¶¶54, 58-59; EX1034, 3; EX1037, 1-2.

Fourth, the medical industry began using personal devices and "apps" to deliver care and give patients access to biomedical data. EX1003 ¶¶55-56. This trend drove smartphones and similar devices to develop miniaturized, network-connected monitoring devices that could communicate with wearable sensors, and led to the use of cloud-based transfer and storage for health and fitness data. EX1003 ¶¶55-56; EX1036, 9-10, 40-49; EX1040, 1-2; *id.* at 5; EX1034, 4.

The figure below shows such a "remote health monitoring system." EX1034, 2, 5; EX1003 ¶57.

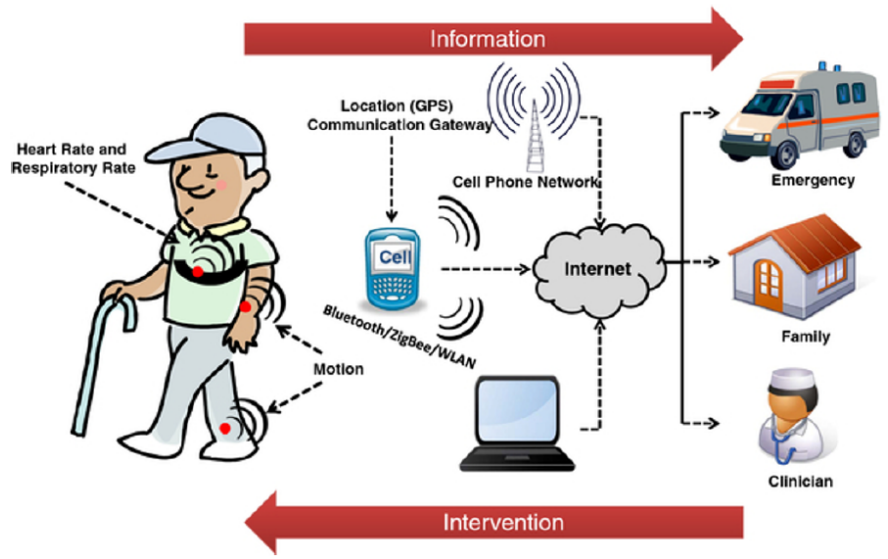

Figure 1 Illustration of a remote health monitoring system based on wearable sensors. Health related information is gathered via body-worn wireless sensors and transmitted to the caregiver via an information gateway such as a mobile phone. Caregivers can use this information to implement interventions as needed.

EX1034, 2.

A similar system is illustrated below:

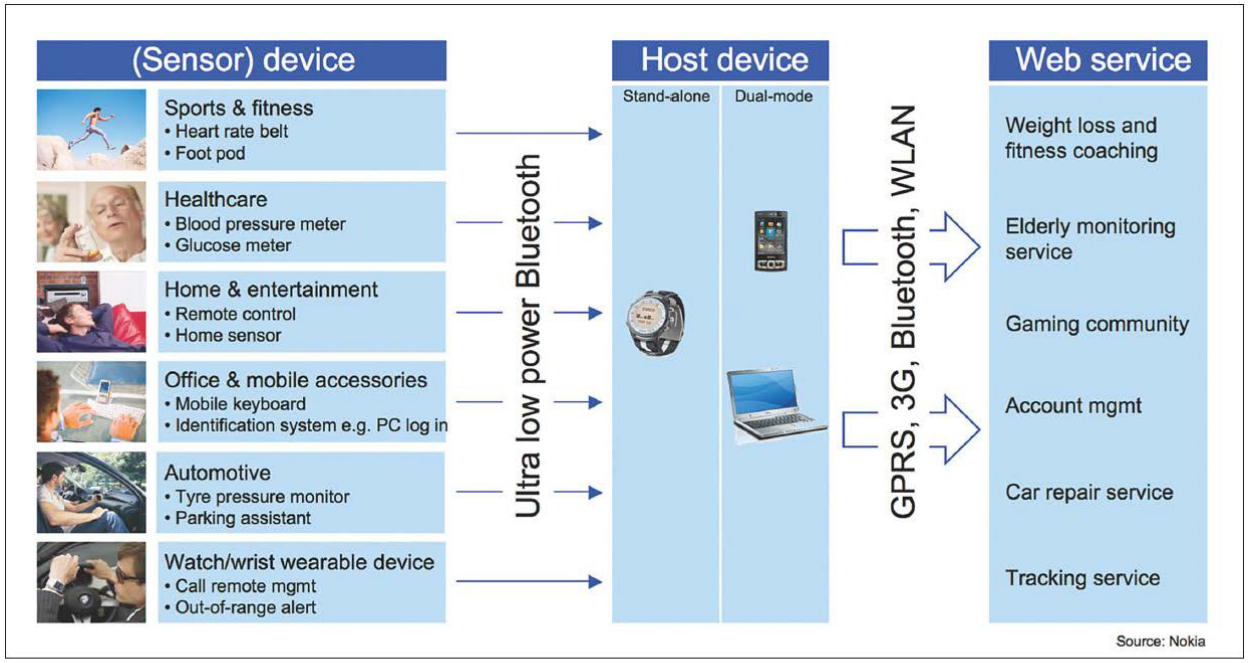

Figure 2. Bluetooth low energy will extend interoperable wireless connectivity to coin-cell-powered wireless sensors in health care, fitness, and related sectors. WLAN, wireless local area network; GPRS, general packet radio service.

EX1035, 459-60; EX1003 ¶59. Other publications from 2012 illustrate interconnected networks that use "cloud" based services to support health/fitness applications. EX1003 ¶60; *see* EX1037, 6-7, 12. Indeed, the wireless, Internet-connected architecture for collecting, processing, and returning processed health data mirrors the analogous "wired" device architecture used for decades in optical systems. EX1003 ¶¶51, 59-52; *see* EX1033, 1363.

Thus, the market trends that resulted in these emerging "cloud"-based products for personal health, sports performance, and medical monitoring provided a strong motivation for a POSITA to integrate optical sensing techniques into small, portable, and wearable consumer devices that communicate wirelessly with personal devices and remote services. EX1003 ¶62. Indeed, the Board previously found—and Omni did not dispute—that "numerous industry trends," including "improving the capabilities of wearable sensors for use in sports and personal fitness applications and wirelessly connecting wearable sensors to networks to remotely monitor patient health" would have motivated a POSITA to modify or adapt prior art systems like those discussed below. EX1008, 23-24, *aff'd*, EX1009.

C. Alleged Invention of The '455 Patent

The '455 patent purports to disclose a "system for measuring one or more physiological parameters… with a wearable device" that uses "an output optical light." EX1001, Abstract, 8:29-36. The "wearable device is adapted to be placed

on teeth, a wrist, or an ear of a user." EX1001, 8:31-32. The system may include a "light source" with a plurality of semiconductors (*e.g.*, LEDs) that emit an "optical light having a plurality of optical wavelengths." EX1001, 8:32-36, Abstract. The output light is directed to a sample and then reflected/transmitted back where it is captured by detectors. EX1001, 8:39-47. The patent states that a smart phone or tablet comprising "a wireless receiver, a wireless transmitter, a display, a speaker, a voice input module, a microprocessor and a touch screen" will "receive and process at least a portion of" an "output signal. EX1001, 8:46-56. The "output signal is indicative of one or more of the physiological parameters" measured by the wearable device. EX1001, 8:60-61.

D. Prosecution History of The '455 Patent

The '455 patent is part of a family of continuations that includes the '533 and '484 patents. It is subject to a terminal disclaimer to some of those patents. EX1001, 1-2; EX1002, 378, 383. The '455 patent purports to claim priority back to December 31, 2012, provisional applications, but was prosecuted as an AIA patent, and Omni acknowledged at least one claim of the '455 patent lacked the 2012 priority date and was subject to the AIA. EX1002, 254, 391-395.

The claims of the '455 patent were allowed during prosecution without incurring any rejections or substantive discussion of the prior art from the Examiner. Instead, the claims were allowed on June 16, 2021, amended twice after allowance,

on August 4, 2021 and September 16, 2021. EX1002, 599, 623. The examiner entered these amendments, and the patent issued on November 2, 2021. EX1002, 637-47, 648.

VII. GROUNDS OF UNPATENTABILITY

A. Collateral Estoppel

The Challenged Claims are materially similar (or identical) to those found unpatentable by the Board in the prior '533 and '484 IPRs. EX1008, EX1011. These findings are identified below on a limitation-by-limitation basis for the claims to which they apply. Nearly all of these findings have been affirmed by the Federal Circuit—only the question of whether the prior art teaches the "identifying an object" limitation in the '484 patent remains a live limitation on appeal. EX1012, EX1013. Thus, for the limitations/claims below that overlap with those previously found unpatentable, Omni is collaterally estopped from challenging unpatentabilty. *Papst*, 924 F.3d at 1251; *Samsung Elecs. Co., Ltd. v. Netlist, Inc.*, IPR2025-00002, Paper 17, 17-24 (P.T.A.B. May 15, 2025).

First, the limitations in the Challenged Claims are "substantially similar" (and in some cases, identical) to limitations the Board found unpatentable in the prior IPRs, relying on the same art (Lisogurski, Carlson, Tran, and Valencell-093). *Google LLC v. Hammond Dev. Int'l*, 54 F.4th 1377, 1381-82 (Fed. Cir. 2022) ("It is well established that patent claims need not be identical for collateral estoppel to

apply."); *Ohio Willow Wood Co. v. Alps S., LLC*, 735 F.3d 1333, 1342 (Fed. Cir. 2013) (collateral estoppel applied to a related patent where the "patents use[d] slightly different language to describe substantially the same invention"); *Soverain Software LLC v. Victoria's Secret Direct Brand Mgmt.*, LLC, 778 F.3d 1311, 1319 (Fed. Cir. 2015) ("Complete identity of claims is not required to satisfy the identity-of-issues requirement for claim preclusion.").

Second, these limitations were "actually litigated" by Omni. *Google*, 54 F.4th at 1381-82; EX1008, *aff'd* EX1009; EX1011, *aff'd in part rev'd in part*, EX1012; EX1013.

Third, these limitations were "essential" to the findings of unpatentability, and have become final as to all but one limitation, as they were either affirmed by the Federal Circuit or not cross-appealed by Omni. *United Therapeutics Corp. v. Liquidia Techs., Inc.*, 74 F.4th 1360, 1372 (Fed. Cir. 2023).

Fourth, Omni had a full and fair opportunity to litigate the patentability of these limitations. *Google*, 54 F.4th at 1381-82.

B. Ground 1: Claims 1-4, 8-11, and 15-16 would have been obvious over Lisogurski in view of Carlson and Soller.

Lisogurski in view of Carlson and Soller renders obvious claims 1-4, 8-9, 10-11, 15-16. Almost every limitation in these claims was previously found unpatentable based on Lisogurski and Clarson, and the additional limitations of these claims are found in these same references or in Soller.

1. Overview of Ground 1

a) Lisogurski

Lisogurski describes a portable "physiological monitoring system" that uses a wearable optical sensor to measure "physiological parameters of a patient," including pulse rate and oxygen saturation (*e.g.*, a pulse oximetry system). EX1027, 3:44-46, 3:62-4:8; EX1003 ¶83. The system includes a sensor, monitor, and remote devices (*e.g.*, servers). EX1027, 11:28-32, 15:43-48. The sensor is a "light sensor" that can be worn on various body parts, is battery powered, and can wirelessly communicate with the monitor. EX1027, 3:62-4:8, 4:15-20, 17:55-58. The sensor can include multiple light emitting diodes (LEDs) of "one or more wavelengths" (*e.g.*, red and infrared (IR)) and photodetectors. EX1027, 10:48-64; *see also* EX1027, 4:42-48, 11:9-13, 17:37-45.

The system regulates a light drive signal, referring to the electric current applied to the LEDs. EX1027, 1:60-61, 7:13-16, 8:4-8, 11:38-41, 50-54, 12:3-9; EX1003 ¶87. As a higher current is applied to a particular LED, its emitted light intensity increases. EX1027, 7:13-31, 12:3-22; EX1003 ¶87. Lisogurski teaches that the LEDs can be modulated, and that, depending on various conditions, the system can change the modulation parameters and the light drive cycle, EX1027, 1:10-25, 1:60-2:3, 4:48-54, 8:4-8, 8:27-35, 16:25-32. The drive cycle parameters that can be controlled include "light intensity, duty cycle, [and] light source firing

rate." EX1027, 1:60-61, 1:67-2:3; *id.*, 1:10-25, 5:48-54, 25:46-65. Varying the drive cycle parameters can increase the signal-to-noise ratio (SNR) of the device when interference is encountered. EX1027, 5:55-6:6, 8:46-52, 27:44-49; EX1003 ¶87.

The modulated light is emitted by the LEDs in beams, passes into a person's tissue, and is transmitted through/reflected back, where it is detected by a photodetector on the sensor. EX1027, 4:7-11, 10:48-56, 11:13-20. The photodetector "convert[s] the intensity of the received light into an electrical signal." EX1027, 11:14-16. From there, the sensor can either send the signal directly to the monitor or it can pre-process the signal. EX1027, 11:20-27; EX1003 ¶¶85-86. The sensor can be connected to the monitor with or without a wire. EX1027, 17:54-59, Fig. 3; EX1003 ¶83. Either way, the device applies signal processing techniques to the detected signal to isolate the signal from the reflected light. EX1027, 7:16-21, 12:48-49, 13:7-14:55; EX1003 ¶86.

b) Carlson

Carlson discloses a pulse oximeter that can be worn on the ear, finger, or elsewhere. EX1028, [0003], [0052], [0078]; EX1003 ¶89. The oximeter uses a conventional sensor that emits optical wavelengths in the red (*e.g.*, 660 nm) and infrared (*e.g.*, 800-1000 nm) ranges and detects light that has been transmitted or reflected. EX1028, [0003], [0050], [0052]-[0054]; EX1003 ¶89. The device is

mobile and can wirelessly transmit data to, *e.g.*, a doctor or hospital. EX1028, [0072], [0077]-[0078].

Carlson seeks to "increase the technical performance of pulsoximetry in terms of quality and robustness of the measurement signal versus environmental disturbances and energy consumption." EX1028, [0002]. Carlson aims to improve these sensors by "defin[ing] optical and/or electrical means for increasing the Signal-to-Noise ratio (S/N) … of a pulsoximeter sensor for robust application of pulsoximetry … in rough (optical) environmental conditions, e.g., at changing light influences, such as sunlight, shadow, artificial light, etc." EX1028, [0010].

c) Soller

Soller describes a measurement system for non-invasively monitoring the volume of red blood cells (hematocrit) using optical sensors that measure the components of those cells, including hemoglobin, methemoglobin, carboxyhemoglobin, and sulfhemoglobin. EX1030, 1:19-51, 5:33-37, Abstract. Soller teaches a measuring device with an "illumination component" that emits beams of light of multiple wavelengths in the "visible and near-infrared spectral region[s]" to measure the optical properties of the sample. EX1030, 11:44-12:2, 13:13-28, 18:18-23. The device may have between 5 and 20 LEDs, each emitting a different wavelength. EX1030, 13:13-28, 13:39-40. The LEDs are "evenly spaced and arranged in a circular pattern" and "preferably tilted inward," which Soller

teaches "increase[es] the accuracy of the measurement." EX1030, 13:35-49; 16:39-48 (a "ring-like pattern" for the LEDs "maximize[s] the amount of radiation" directed to the sample). The light is delivered to the skin with a probe "in close proximity to the skin," such as via a "hand-held unit." EX1030, 12:30-38. The device includes interior and exterior detectors for capturing the light received from the tissue. EX1030, 13:50-63. Soller teaches that "[b]ecause of its small size," the device is "portable, handheld, and easily manipulated," which allows the measurement of hematocrit in "remote locations." EX1030, 15:50-56, 15:31-40 (Soller's device is "particularly desirable for applications necessitating a portable or hand-held device"); EX1003 ¶¶93-94.

2. Motivation to Combine

A POSITA would have considered the optical measurement systems taught by Lisogurski, Carlson, and Soller together; they are analogous systems with common applications and utility. EX1003 ¶98. Specifically, all three describe techniques for improving the performance of wearable, optical devices that can be used remotely to monitor physiological parameters, including blood oxygen saturation. *Id.* Lisogurski teaches various techniques for increasing SNR while minimizing power consumption. *Supra* §§VII.B.1.a. These teachings would have motivated a POSITA to look to techniques used by other systems achieving the same objectives—part of the POSITA's natural design process. EX1003 ¶99. Thus, a

POSITA would have looked to Soller, which describes, *e.g.*, configuring an optical sensor (that can operate remotely) to maximize the accuracy of a physiological measurement. EX1003 ¶¶102-03.

Notably, the Board twice found (and the Federal Circuit twice affirmed) that a POSITA would have been motivated to combine Lisogurski and Carlson. EX1008, 22-25; EX1011, 22, 28, 36-43. In the '533 IPR, *Omni did not even dispute* there would have been a motivation to combine these references. EX1008 22-25 (citing EX1018, 14-32), *aff'd*, EX1009. And in the '484 IPR, Omni disputed only that there would have been a motivation to combine Carlson and Lisogurski for the limitations requiring increasing SNR by increasing the pulse rate, an argument that the Board found was flatly contradicted by Lisogurski, which Omni did not cross-appeal. EX1011, 28-43; EX1012, n.2. Thus, Omni is collaterally estopped from challenging motivation to combine these references. *Supra* §§VII.A. And Soller is equally in line with the teachings in these references and the Board's findings regarding motivation to combine.

First, Lisogurski teaches that its PPG system is designed to optimize power consumption and allows "for increased battery life" and "portability." EX1027, 1:4-6, 1:16-18, 3:50-53; EX1003 ¶99. For example, Lisogurski teaches that its techniques could reduce power requirements for oximeters, thereby allowing for smaller devices (*e.g.*, a wearable sensor worn on the wrist) or longer life. EX1027,

4:15-20, 4:63-67 17:51-58. Lisogurski also teaches increasing SNR of measured signals while minimizing power consumption using various techniques. EX1027, 9:46-60. These teachings in Lisogurski would have motivated a POSITA to look for other techniques accomplishing the same objectives, particularly in the field of wearable sensors. EX1003 ¶99. Indeed, looking to complementary designs and techniques in analogous systems would have been part of a POSITA's ordinary design process to improve the operation of a PPG device. EX1003 ¶99.

Thus, a POSITA would have looked to Carlson, which describes improvements to pulse oximetry devices as they relate to both signal measurement and energy consumption. EX1028, [0002]; EX1003 ¶100. Specifically, Carlson teaches increasing SNR of an optical sensor using various techniques and structures, even where optical conditions of the environment are changing. EX1028, [0010]. Carlson explains its techniques are energy efficient and can be used in battery-powered devices worn by a user (*e.g.*, on an earlobe/finger). EX1028, [0048], [0052]. Carlson discloses incorporating these techniques for improving SNR into devices used for a variety of health and fitness applications. EX1028, [0004]. Similarly a POSITA would have looked to Soller, which describes, *e.g.*, configuring an optical sensor (that is portable and can operate remotely) to maximize the accuracy of a physiological measurement, including the hemoglobin content of blood. EX1003 ¶¶100-103; EX1030, 15:50-56, 15:31-40,13:35-49; 16:31-53.

Lisogurski, Carlson, and Soller describe analogous systems with overlapping applications and objectives; namely, techniques for improving performance, utility, and power consumption of portable, wearable, optical sensors. EX1003 ¶¶98, 103. A POSITA therefore would have considered these references together, consistent with the market trends discussed above. EX1003 ¶¶98-103; *supra* §§VI.B.

The application of Carlson and Soller's teachings to Lisogurski's optical system would have required routine modifications for which a POSITA would have had a reasonable expectation of success. EX1003 ¶103. Implementing Soller's light source modifications, including the arrangement and number of LEDs and detectors, into Lisogurski would have been routine because the use of different configurations of light sources was a well-known technique. EX1003 ¶¶130, 210. Modifying Lisogurski to include Carlson's "beam shaping element" would have been routine because using elements such as lenses to focus the light of LEDs is a "building block" of optical measurement systems. EX1003 ¶ 139.

Specific reasons why a POSITA would have added these features from Soller and Carlson to Lisogurski are discussed below. EX1003 ¶¶98-103.

3. Analysis of Ground 1

a) Claim 1[pre], 8[pre], 15[pre][4]

To the extent the preamble is limiting, Lisogurski describes a system for measuring physiological parameters. EX1027, 3:43-46, 3:61-4:3; *id.*, Abstract, 4:52-62, Figs. 1, 3; EX1003 ¶¶116-17, 227, 242. Lisogurski discloses a system for use with a smart phone or tablet. EX1027, 15:19-42, 18:65-67, 15:43-65; EX1003 ¶¶118-20, 227, 242. The Board previously found Lisogurski teaches a limitation requiring a smartphone or tablet for use with the physiological monitoring system. EX1008, 7, 39-43, *aff'd*, EX1009;[5] EX1011, 25-27; EX1012, n.2.

b) Claim 1[a], 8[a], 15[a]

The Board found (and Omni did not dispute) that Lisogurski discloses materially identical limitations. EX1008, 7, 25-26; EX1011, 5, 23, 26-27.

"[A] wearable device adapted to be placed on teeth, a wrist, or an ear of a user." Lisogurski describes a measurement system (100/310), which includes a sensor (102/312) for measuring blood oxygen saturation that can be mounted on a

[4] The Petition addresses materially identical/overlapping claim limitations together; the exact claim language for these limitations is found in Appendix A.

[5] Henceforth, the Petition cites only the FWD in the '533 IPR, but the Federal Circuit summarily affirmed that decision in full. EX1009.

user's "earlobe" or "wrist to monitor radial artery pulsatile flow." EX1027, 4:6-20; *id.*, 3:43-46, 3:61-4:5, 4:52-62, 17:55-59, Figs. 1, 3; EX1003 ¶122, 228, 243. Lisogurski thus discloses a wearable device adapted to be placed on a wrist or ear of a user. EX1003 ¶122, 228, 243.

"[I]ncluding a light source comprising a driver and a plurality of semiconductor sources" / "including a light source comprising a driver and a plurality of semiconductor sources that are light emitting diodes." Lisogurski's wearable sensor may include a light source comprising multiple LEDs, *i.e.*, multiple "*semiconductor sources*." EX1027, 17:42-45 ("In an embodiment, sensor unit 312 may include **multiple light sources** and detectors."); 10:48-64; Fig. 1 (130); Fig. 3 (316). The light source may include any number of LEDs, such as multiple IR LEDs and multiple red LEDs. EX1027, 7:38-67, 10:58-63, 17:37-45, 19:20-39. EX1003 ¶¶123-24, 228, 243.

Lisogurski discloses that its system may "**adjust the drive signal to an LED**," including by use of "**light drive circuitry 120**." EX1027, 7:13-37, 8:4-8, 11:29-32, Fig. 1. Lisogurski states that the "**[l]ight drive circuitry 120…may be configured to generate a light drive signal that is provided to light source 130** of sensor 102," and that the signal "may…control the intensity of light source 130 and the timing of when light source 130 is turned on and off," and may further "control the operation of each wavelength of light" when the "light source 130 is

configured to emit two or more wavelengths of light." EX1027, 50-60, 10:42-46, Fig. 1, EX1003 ¶125, 228, 243.

Integrating the light drive circuitry 120 in Figure 1 of Lisogurski with the light source 130 would have been an obvious modification that a POSITA would have been motivated to make, as Dr. Mercier explains and as the Board previously found. EX1003 ¶126; EX1008, 22-23(quoting EX1027, 16:2-9); EX1011, 24-45. Specifically, a POSITA would have been motivated to combine the control and light drive circuitry (depicted below in **blue**), which operate together, with the sensor unit/device with the **light source**, consistent with the disclosures in Lisogurski that multiple components can be combined and the market trends toward miniaturized electronics. EX1003 ¶126. This modification would have been within the skill and knowledge of a POSITA. EX1003 ¶126.

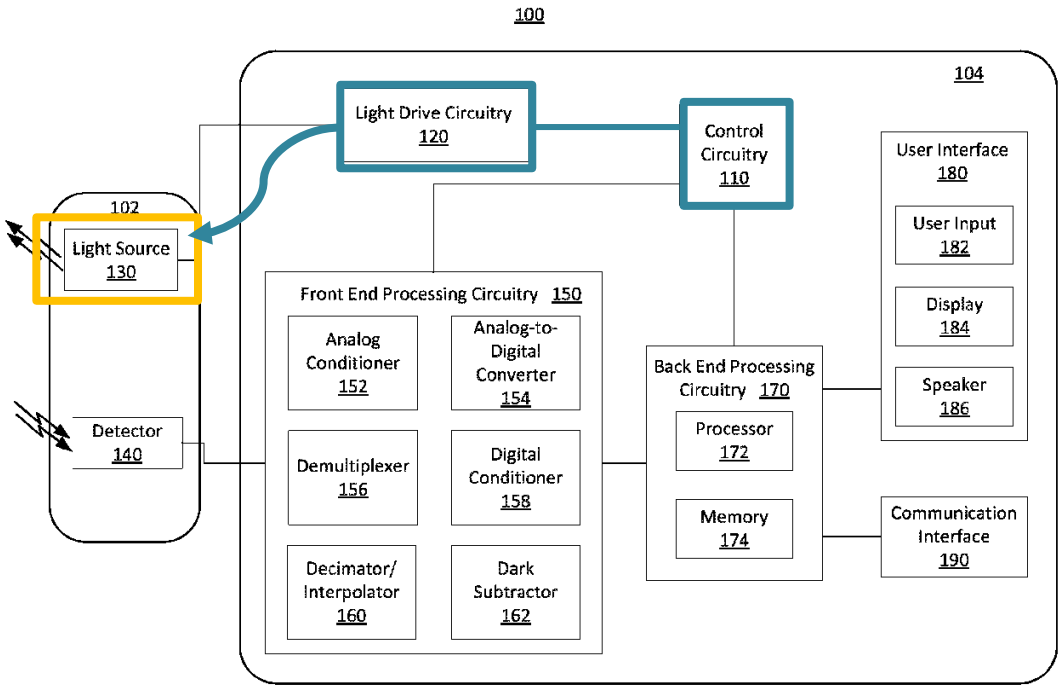

FIG. 1

EX1027, Fig. 1; EX1003 ¶¶123-24.

<u>"[T]he plurality of semiconductor sources configured to generate an output optical light having a plurality of optical wavelengths" / "the light emitting diodes configured to generate an output optical light having one or more optical wavelengths."</u> Lisogurski specifies that each of the LEDs ("*semiconductor sources*") is configured to output optical light having a plurality of optical wavelengths. EX1027, 10:49-52 (the LEDs are "configured to emit photonic signals having **one or more wavelengths of light** (e.g., Red and IR) into a subject's tissue"), 7:38-67; *see also id.* 4:42-45; EX1003 ¶128.

Lisogurski states that its device "may be configured to determine pulse rate, blood pressure, blood oxygen saturation (e.g., arterial, venous, or both), hemoglobin

concentration (e.g., oxygenated, deoxygenated, and/or total), any other suitable physiological parameters, or any combination thereof." EX1027, 17:59-67. Lisogurski teaches that "the photonic signal interacting with the tissue is selected to be of one or more wavelengths that are attenuated by the blood in an amount representative of the blood constituent concentration," and that measurement of "blood oxygen saturation of hemoglobin in arterial blood" is performed by "comparing the intensities of two wavelengths at different points in the pulse cycle." EX1027, 4:43-51; EX1003 ¶129.

c) Claim 1[b], 8[b], 15[b]

The Board has found (and Omni did not dispute) Lisogurski teaches an output optical light emitted by LEDs and received by a lens or encapsulant, which in turn delivers lens output light to a sample, such as tissue. EX1008, 7, 35-37; *see also* EX1011, 5, 23-24, 26-27 (finding Lisogurski teaches a "lens output beam").

Lisogurski, considered alone or in combination with Carlson, teaches a wearable device (*e.g.*, Lisogurski's sensor 102/312) comprising one or more lenses configured to receive at least a portion of the output optical light and to deliver a lens output light to tissue. EX1003 ¶¶132-140, 229, 244.

Lisogurski teaches that its measurement device (sensor 102/312) is configured to receive a portion of the output optical light (EX1027, 7:38-8:3,10:52-56, 19:25-31; EX1003 ¶133) via, *e.g.*, an encapsulant or a lens system that captures and focuses

the emitted light. EX1003 ¶134. Specifically, a POSITA would have understood that a conventional LED (like those on Lisogurski's sensors) includes a light-emitting semiconductor that creates an outputted optical light. EX1003 ¶134. A POSITA would have known there are three types of LEDs: (i) LEDs with no encapsulant; (ii) LEDs with an optically inert encapsulant; and (iii) LEDs with an optically active encapsulant that functions as, *e.g.*, a lens. EX1003 ¶134. A POSITA would have understood that the first type of LED is rarely used in optical systems. EX1003 ¶134. A POSITA would have understood that the third type of LED can increase efficiency of the device by focusing and directing more light produced toward the tissue, which can be important in mobile, battery-powered devices. EX1003 ¶¶134-35. A POSITA would have found it obvious, therefore, to select an LED for Lisogurski's system that uses an encapsulant as a lens, which would have been a common configuration with known benefits. EX1003 ¶135. Indeed, a POSITA would recognize that a lens is a "basic building block" of an optical sensor. EX1033, 765; EX1003 ¶135.

In such a configuration of Lisogurski, each of the LEDs would emit at least a portion of the output optical light, which would be received, captured, and focused by that LED's encapsulant lens, then delivered to the tissue as a lens output light. EX1003 ¶136.

To the extent Omni argues that this limitation would not have been obvious in view of Lisogurski alone, it would have been obvious to a POSITA to modify Lisogurski in view of Carlson to include such a limitation. EX1003 ¶¶137-40. Indeed, Carlson identifies the benefits of using "**at least one beam shaping optical element** to direct the emitted light," *i.e.*, Carlson teaches focusing the **optical output light** to create a **lens output light** that is then delivered to a **sample/tissue**. EX1028, [0011]-[0013], EX1003 ¶137. Carlson teaches that the "**beam shaping element**" can be "**diffractive or refractive lenses**, to **direct the emitted optical radiation** of**, e.g., the LED light source into the human or animal tissue**…." EX1028, [0014], [0024], [0062]. Figure 4 (below) of Carlson shows two lenses 21 that receive light beams 8 emitted by LEDs 15 ("***a portion of the output optical light***") and deliver **light bundles or beams 12** to **sample 2** ("***deliver a lens output light to tissue***"). EX1028, [0054], [0062].

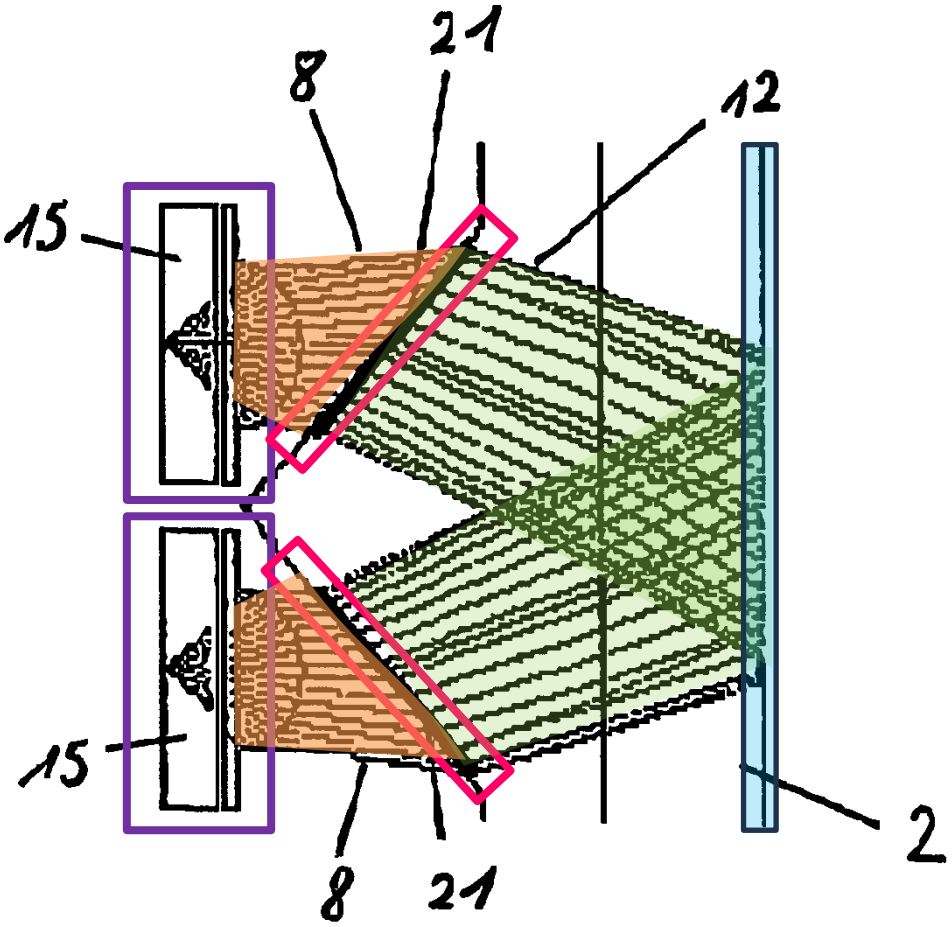

Figure 4

EX1028, Fig.4 (annotated); *id.*, [0054] ("in Fig. 4, using the **beam shaping optics 21**, **the two initial light beams 8** are guided in **the form of bundled beams 12**").

The potential benefits of including a lens in the wearable device of Lisogurski would have been obvious to a POSITA. EX1003 ¶139. Carlson teaches that lenses can be included in optical sensors to increase the optical signal power without increasing the actual power used by the system. EX1028, [0014] ("The basic idea… is **to use a beam-shaping element, such as e.g.… lenses**…, in order to increase the

optical signal power…, thus increasing the Signal/Noise … ratio."); *id.*, [0010]; EX1003 ¶139. Lisogurski identifies as one of its objectives to improve the power consumption efficiency of optical sensing devices, including via techniques that improve SNR of the measured optical signal. EX1027, 6:3-6, 9:49-60, 13:60-14:10, 14:40-55, 37:6-20; EX1003 ¶139. A POSITA would have found it obvious to include a lens, per Carlson, to receive at least a portion of the output optical light and to deliver a lens output light to tissue. EX1003 ¶¶138-140.

d) Claim 1[c], 8[c], 15[c]

The Board has found (and Omni did not dispute), Lisogurski teaches materially identical limitations to 1[c], 8[c], and 15[c]. EX1008, 7-8, 37-39; EX1011, 5, 24-27; EX1003 ¶148.

"[D]etection system configured to receive at least a portion of the lens output light reflected from the tissue and to generate an output signal." Lisogurski's sensor (a wearable device) includes a **detector** (140/318) that **receives** "the light that is reflected by or has traveled through the subject's tissue." EX1027, 17:39-42; *id.*, 11:9-10; Fig. 1 (140); Fig. 3 (318). Lisogurski teaches the detector is coupled to front end processing circuitry, EX1027, 12:42-45; Fig. 1(150), which a POSITA would have understood to collectively be a "detection system." EX1003 ¶¶143-44, 230, 245.

Lisogurski teaches the front end processing circuitry in the detection system may be integrated directly with the sensor, rather than in a separate monitor. EX1003 ¶144. Specifically, Lisogurski suggests integrating the front-end processing circuitry with the detection system in the manner depicted below. EX1027, 11:20-25, 17:55-59 ("Sensor unit 312 may be powered by an internal power source, e.g., a battery (not shown)…. [T]he sensor may be wirelessly connected to monitor 314 (not shown)."), 18:23-25; *see also id.*, 17:32-35.

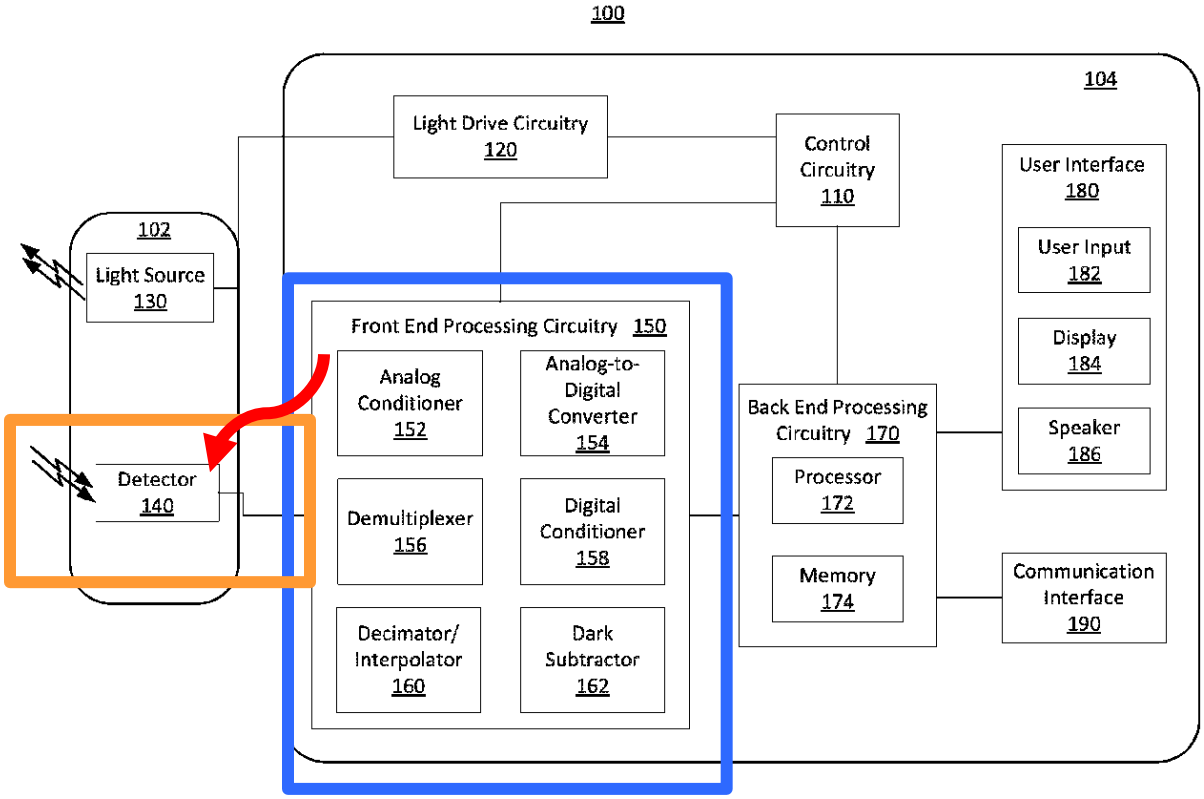

FIG. 1

EX1027, Fig. 1 (annotated).

A POSITA would have considered it a routine and obvious modification to Lisogurski to integrate the front end processing circuitry in the monitor into the same

device as the detector(s) based on these teachings in Lisogurski, as well in view of the market trends discussed above—in fact, existing wearable devices (*e.g.*, Nonin finger clip sensors) had this functionality. EX1003 ¶¶144-45. A POSITA would have understood the functional relationship between the detector(s) and the monitor; specifically, the signal received by the detector would preferably be converted from analog to digital form in order to be wirelessly transmitted to the monitor. EX1003 ¶145. A POSITA would have understood, and indeed, Lisogurski teaches, that the front end processing circuitry can perform analog-to-digital conversion and other initial signal processing. EX1003 ¶145. A POSITA would have understood that adding this additional necessary circuitry in the sensor would not affect the device's operation, because such circuitry is small and power efficient, and would have been straightforward to integrate into the wearable sensor. EX1003 ¶146. Furthermore, a POSITA would have understood this variation of Lisogurski to be consistent with Lisogurski's disclosure that "[i]n some embodiments the functionality of some of the components may be combined in a single component… [or] the functionality of some of the components of monitor 104… may be divided over multiple components." EX1027, 16:2-9; EX1003 ¶146.

Lisogurski also discloses that the detector(s) "process[es] at least a portion" of the light reflected from the tissue by "converting the intensity of the received light," *i.e.*, the analysis output beam from the tissue, "into an electrical signal."

EX1027, 11:6-27, Fig. 1 (102), Fig. 3 (312); EX1003 ¶¶142-44, 149-50. The detection system generates an "output signal" from reflected light by "converting the intensity of the received light into an electrical signal." EX1027, 11:14-16, 17:39-42; *see also id.*, 11:9-10; Fig. 1 (140); Fig. 3 (318); Fig 2B. 2:17-19 (showing illustrative plot of "a **detector signal** that may be **generated** by a sensor"); 12:50-51 ("One suitable **detector signal** that may be received by front end processing circuitry 150 is shown in Fig. 2B"); 12:52-13:6; EX1003 ¶¶142-44, 149-50. "[A]fter converting the received light to an electrical signal, detector 140 may send the detection signal to monitor 104" directly (EX1027, 11:20-22), or the sensor may further process the electrical signal before transmitting the detection signal to the monitor (EX1027, 11:25-27).

"[A]n output signal having a signal-to-noise ratio." Lisogurski discloses that the output signal has a signal-to-noise ratio. Lisogurski teaches altering "parameters" of the LEDs in response to "the level of noise, ambient light, other suitable reasons" to mitigate the effect of noise, motion, or ambient light and thereby increase the signal-to-noise ratio. EX1027, 1:19-21, 9:46-52; *id.* at 5:57-61, 9:57-60, 14:40-55 (referring to the "**signal-to-noise ratio of the detection signal"**), 35:5-9; EX1003 ¶¶87, 149-150, 181-83, 230, 245. The "[p]arameters [of the LEDs] that may be varied include light intensity, firing rate, duty cycle, other suitable parameters, or any combination thereof," where "light intensity" corresponds to

brightness, frequency corresponds to "firing rate," and pulse width (*i.e.*, the duration of each pulse of light from the LED) corresponds to "duty cycle." EX1027, 1:19-21; EX1003 ¶¶87, 149-150, 181-83.

For example, Lisogurski teaches "the intensity of light source 130 and the timing of when light source 130 is turned on and off" is controlled by a light drive signal that "increase[s] the brightness of the light sources in response to…noise to improve the **signal-to-noise ratio**." EX1027, 9:46-60, 11:50-54; *see also id.*, 1:44-48, 11:38-54 (signal modulation techniques are controlled by control and light drive circuitry, which generate a light drive signal for activating and controlling the sensors of the light source(s)), Fig. 2B; EX1003 ¶¶149-150, 181-83.

"[W]herein the detection system is configured to be synchronized to the light source." The Board has previously found (and Omni did not dispute) that Lisogurski renders obvious a materially similar element, a receiver "synchronized to the light source." EX1008, 37-39, 41; EX1003 ¶155

Lisogurski teaches that front end processing circuitry for its system is synchronized with the light drive circuitry that controls the modulation or pulses of the LEDs. EX1027, 11:33-49 (emphasis added) ("front end processing circuitry 150 may… operate **synchronously** with light drive circuitry 120. For example, front end processing circuitry 150 may **synchronize** the operation of an analog-to-digital converter and a demultiplexer with the light drive signal based on the timing control

signals."). Thus, the front end processing circuitry and the detector ("detection system") in Lisogurski are "synchronized" to the light drive signal ("the light source"). EX1003 ¶¶152-154.

e) Claim 1[d], 8[d], 15[d]

The Board has found (and Omni did not dispute), Lisogurski teaches this element. EX1011, 5-6, 25, 26-27; EX1003 ¶161.

"[W]herein the detection system comprises a plurality of detectors that are spatially separated from each other." Lisogurski teaches that its sensor "may include multiple… detectors, which may be spaced apart." EX1027, 17:43-45. Thus, Lisogurski teaches "a plurality of spatially separated detectors." EX1003 ¶¶158, 231, 246.

"[W]herein at least one analog to digital converter is coupled to at least one of the spatially separated detectors." The electrical signals generated by the detectors are received by the front end processing circuitry, and are passed between the components of the circuitry. EX1027, 13:6-59; EX1003 ¶¶159, 231, 246. The front-end processing circuitry includes an analog-to-digital converter 154 (annotated Figure 1 below). EX1027, 13:21-30; EX1003, ¶159.

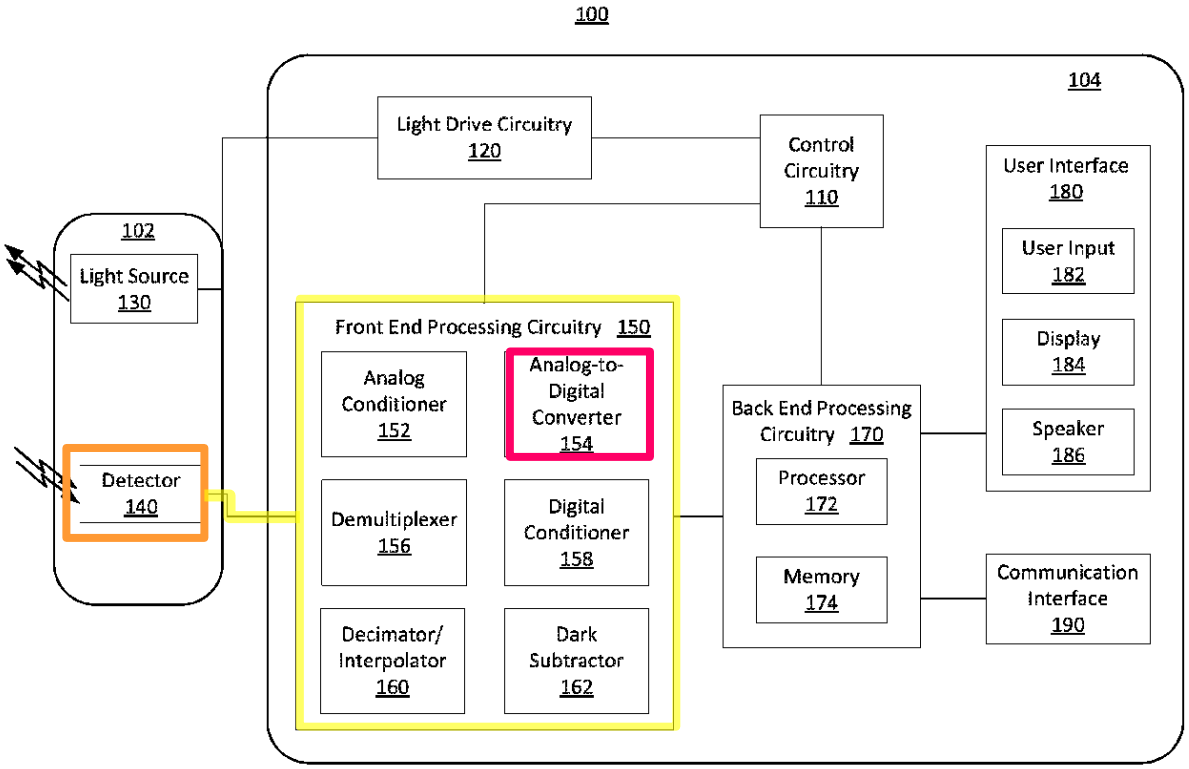

FIG. 1

As shown in Fig. 1, **the analog-to-digital converter** is coupled (yellow annotation) to at least one of **the spatially separated detectors**. EX1003 ¶160; EX1027, 11:28-32, 18:16-31.

f) Claim 1[e], 8[e], 15[e]

The Board found (and Omni did not dispute) that Lisogurski teaches or renders obvious this element. EX1008, 7-8, 39-43; EX1011, 5-6, 25-27; EX1012, n.2.

"[T]he smart phone or tablet comprising a wireless receiver, a wireless transmitter, a display, a speaker, [a voice input module / microphone], a microprocessor and a touch screen." Lisogurski teaches a sensor designed to be

used with a **monitor** with back end processing circuitry that includes a **processor** (*i.e.*, "*microprocessor*"). EX1027, Fig. 1 (172), 14:56-15:18. The **processor** is coupled to the user interface, which may include "any type of user input device, such as… a **touch screen**, **buttons**, switches, a **microphone**," which is a voice input module, "or any other suitable input device" and also includes a **display** and **speaker**. EX1027, 15:19-42, Fig. 1; EX1003 ¶163. The back-end processing circuitry is connected to a communication interface that "**may include one or more receivers [or] transmitters**," each of which "**may be configured to allow… wireless communication**." EX1027, 15:43-65; EX1003 ¶163. Thus, Lisogurski teaches a monitor that may include "**a wireless receiver, a wireless transmitter**, **a display, a speaker**, **a voice input module**, **a microprocessor and a touch screen**." EX1003 ¶¶163-64, 232, 247.

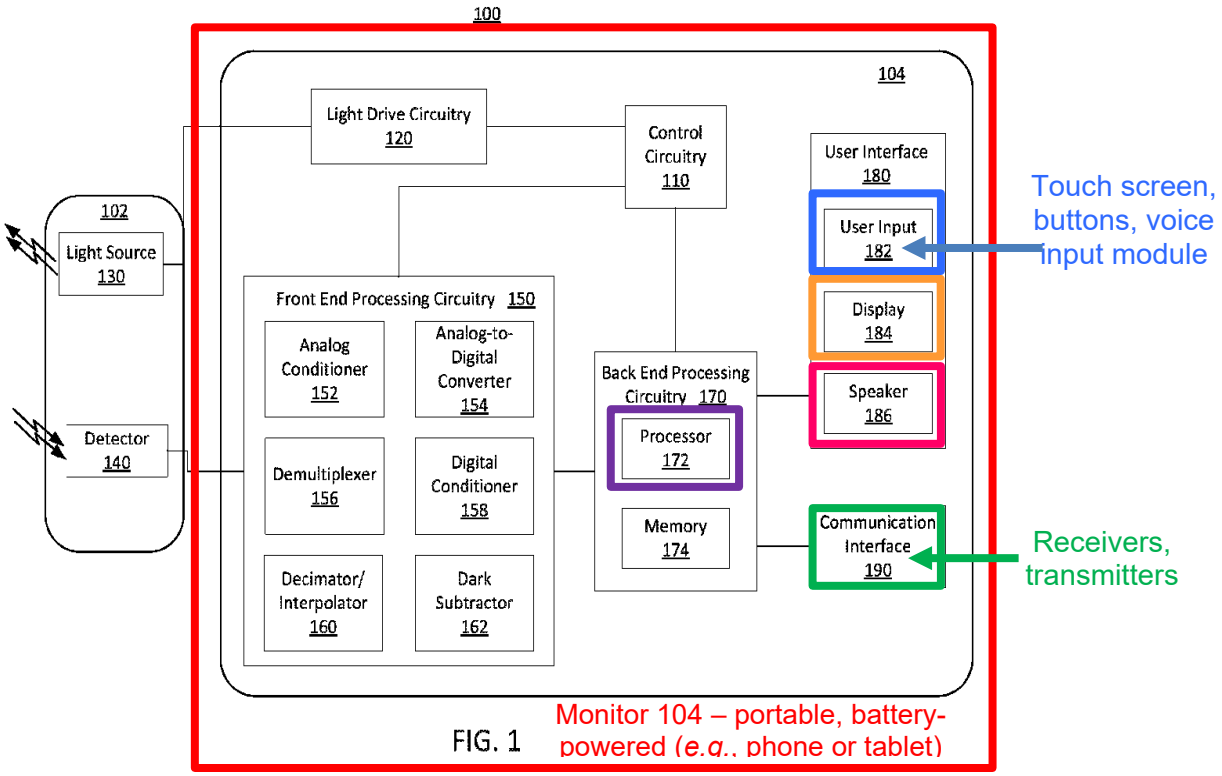

EX1027, Fig. 1 (annotated); EX1003 ¶¶163-64.

Lisogurski's **monitor** is a computing device that can be portable, battery-powered, and have a touchscreen, which a POSITA would have recognized refers to one of a limited number of computer options, including a tablet (a portable, battery-powered device with a touchscreen where the device typically is flat), or a smartphone. EX1003 ¶164; *Kennametal, Inc. v. Ingersoll Cutting Tool Co.*, 780 F. 3d 1376, 1381 (Fed. Cir. 2015) (reference need not "expressly spell out" all the limitations arranged or combined as in the claim, if a POSITA would "at once envisage" the claimed arrangement). In 2012, as discussed above (*supra* §§VI.B), tablets and smartphones were well-known in the art, and there was a trend to

continue developing such devices. Thus, a POSITA reading Lisogurski would have considered it to disclose, or render obvious this element. EX1003 ¶¶164-165.

"[T]he smart phone or tablet configured to receive and process at least a portion of the output signal." As discussed above, Lisogurski teaches a monitor that can be a smartphone or tablet. The back end processing circuitry in the monitor includes a processor that receives and processes the output signal from the front end processing circuitry ("*configured to receive and process at least a portion of the output signal*"). EX1027, 14:56-64. "For example, processor 172 may determine one or more physiological parameters based on the **received** physiological signals." EX1027, 14:56-64; EX1003 ¶¶166-68, 232, 247.

"[W]herein the smart phone or tablet is configured to store and display the processed output signal." Lisogurski teaches the back end processing circuitry of monitor 104 (which may be a smartphone or tablet, as discussed above, *supra* §§VII.B.3.a) includes a processor that "may determine one or more physiological parameters based on the received physiological signals" and a display that shows these physiological parameters (*i.e.*, "*display[s] the processed output signal*"). EX1027, 14:62-15:18; EX1003 ¶¶169-170. The displayed physiological parameters may include, *e.g.*, "an estimate of the subject's blood oxygen saturation generated by monitor 104 (referred to as an 'SpO_2' measurement) [and] pulse rate information." EX1027, 15:19-42; EX1003 ¶¶169-170. Lisogurski teaches that the

back end processing circuitry includes a memory, *e.g.*, a RAM, ROM, flash memory, or hard drive (magnetic disk), which can store a history of the determined physiological parameters. EX1027, 14:64-15:18; 27:31-36, 30:42-48, 33:23-27, Fig. 1 (174). Thus, the processed output signal is both "store[d] and display[ed]" by the smartphone or tablet. EX1003. ¶¶169-172, 232, 247.

"[A]nd wherein at least a portion of the processed output signal is configured to be transmitted over a wireless transmission link." As explained above, Lisogurski teaches a processed output signal "based on the received physiological signals." EX1027, 14:62-64; *supra* §§VII.B.3.d. Lisogurski teaches not only that the physiological data corresponding to the processed output signal can be stored and displayed (*supra* §§VII.B.3.f), but that the "data [may be published] to a server or website," transmitted wirelessly to other devices and monitors (via, *e.g.*, "WiFi, IR, WiMax, BLUETOOTH, UWB, or other standards"), or made available to a user using another suitable technique. EX1027, 15:43-65, 18:10-15, 18:44-67, 20:55-60, 26:55-60; EX1003 ¶¶173-76, 232, 247.

g) Claim 1[f], 8[f], 15[f]

As explained above, Lisogurski teaches a processed output signal "based on the received physiological signals," *i.e.*, the physiological parameters. EX1027, 14:62-64; *supra* §§VII.B.3.d. Lisogurski teaches not only that the physiological data corresponding to the processed output signal can be stored and displayed (*supra*

§§VII.B.3.f), but that the "data [may be published] to a server or website," transmitted wirelessly to other devices and monitors (via, *e.g.*, "WiFi, IR, WiMax, BLUETOOTH, UWB, or other standards"), or made available to a user using another suitable technique. EX1027, 15:43-48, 15:53-57, 18:11-15, 18:49-53, 18:58-65, 20:55-60, 26:55-60. Thus, Lisogurski discloses an output signal that is indicative of one or more of the physiological parameters. EX1003. ¶¶177-79, 233, 248.

h) Claim 1[g], 8[g], 15[g]

The Board found (and Omni did not dispute) that Lisogurski discloses this limitation. EX1008, 7-8, 25-26; EX1009, 5-6; EX1011, 5-6, 23, 26-27; EX1012, n.2.

Lisogurski teaches a wearable device with an LED-based light source (130/316) that is "configured to increase the signal-to-noise ratio by increasing light intensity of at least one of the semiconductor sources from an initial light intensity." Specifically, Lisogurski teaches altering "parameters" of the LEDs in response to "the level of noise, ambient light, other suitable reasons" to mitigate the effect of noise, motion, or ambient light and thereby increase SNR. EX1027, 1:19-21, 9:46-52; *id.* at 5:57-61, 9:57-60, 14:40-55, 35:4-9; EX1003 ¶¶180-83. The "[p]arameters [of the LEDs] that may be varied include **light intensity**, firing rate, [and/or] duty cycle," where "light intensity" corresponds to brightness, frequency corresponds to

"firing rate," and pulse width (*i.e.*, the duration of each pulse of light from the LED) corresponds to "duty cycle." EX1027, 1:19-21; EX1003 ¶181.

For example, Lisogurski teaches "the intensity of light source 130 and the timing of when light source 130 is turned on and off" is controlled by a light drive signal that "increase[s] the brightness of the light sources in response to…noise to improve the signal-to-noise ratio." EX1027, 9:46-60, 11:50-60; *see also id.*, 1:44-48, 11:38-41, 11:50-54 (signal modulation techniques are controlled by control and light drive circuitry, which generate a light drive signal for activating and controlling the sensors of the light source(s)); EX1003 ¶¶183, 234, 249.

i) Claim 1[h], 8[h], 15[h]

The Board found (and Omni did not dispute) that the detection system in Lisogurski teaches this limitation. EX1011, 5-6, 43-44; EX1012, n.2.

Lisogurski teaches a "dark subtraction" technique to "remove ambient and background signals." EX1027, 6:7-19, 13:60-14:10, 16:33-54; EX1003 ¶¶185-86, 235, 250. Specifically, Lisogurski teaches that "the system [may] turn[] on a first light source, followed by a 'dark' period, followed by a second light source, followed by a 'dark' period." EX1027, 6:12-15. "The system may measure the ambient light detected by the detector during the 'dark' period…". EX1027, 6:1-19; 13:67-14:6 (measuring a "dark signal" by "determining the amount of dark signal during [each] 'off' period 220."); EX1003, ¶186.

Lisogurski teaches that the front end processing circuitry uses the current measured when the semiconductor sources (LEDs) are off to generate a "dark signal" ("*a first signal responsive to light received while the semiconductor sources are off*"). EX1027, 13:35-41 ("Demultiplexer 156 may… generate… a first dark signal…, and a second dark signal…"), 12:59-13:6, 11:14-16 (detectors "convert[] the intensity of the received light into an electrical signal"); EX1003 ¶186, 235, 250. The dark signal 222 (also called dark current 222) is measured during dark period 220, and is depicted in Figures 2A and 2B of Lisogurski, annotated below:

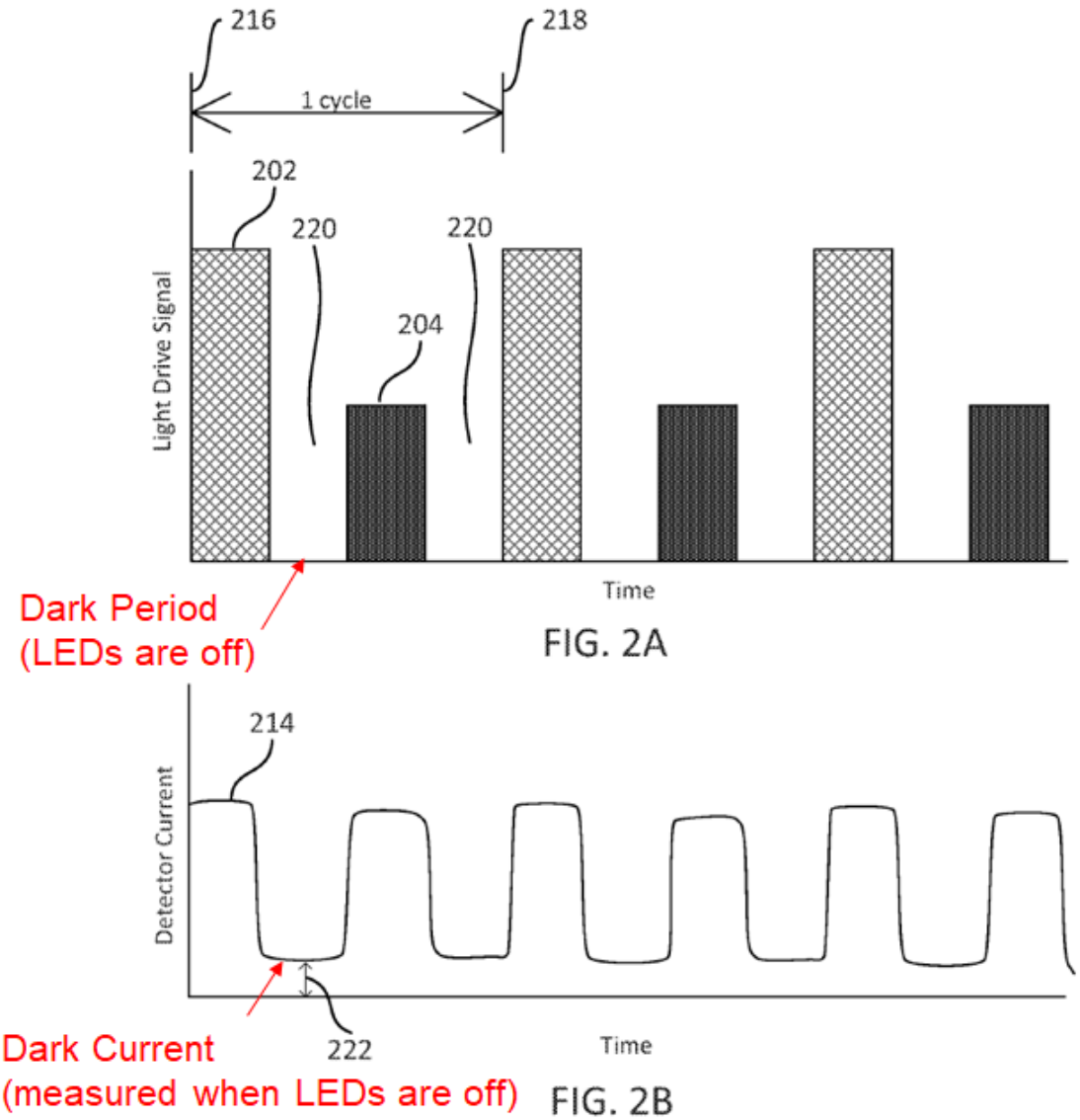

EX1021, 54-56; EX1003 ¶186; EX1027, Figs. 2A (current used to illuminate the LEDs), 2B (current output by detector); *see also* EX1027, 12:64-13:6, 13:67-14:6.

j) Claim 1[i], 8[i], 15[i]

The Board found (and Omni did not dispute) that Lisogurski teaches this limitation. EX1011, 5-6, 43-44; EX1012, n.2.

Lisogurski's dark subtraction process (discussed above) also teaches that its detector(s) and front end processing circuitry are configured to receive (*i.e.*, "capture") light reflected by a user's tissue (*light received while at least one of the semiconductor sources is on*) while at least one LED is turned on. EX1003 ¶¶188-189, 236, 251; *see also* EX1027, 17:40-42 (light received by the detectors includes "light that is reflected by or has traveled through the subject's tissue"); *id.*, 11:12-20. Specifically, Lisogurski states that its system "may measure… the signals received during the first and second 'on' periods." EX1027, 6:12-19.

Lisogurski's system will generate a "red" signal and an "IR" signal ("second signal") when the respective LED is "on." EX1027, 13:67-14:2, 16:33-53, 11:14-16; *see also id.*, 13:35-41, 17:8-10; EX1003 ¶¶18-89. This system is depicted in annotated Figures 2A and 2B:

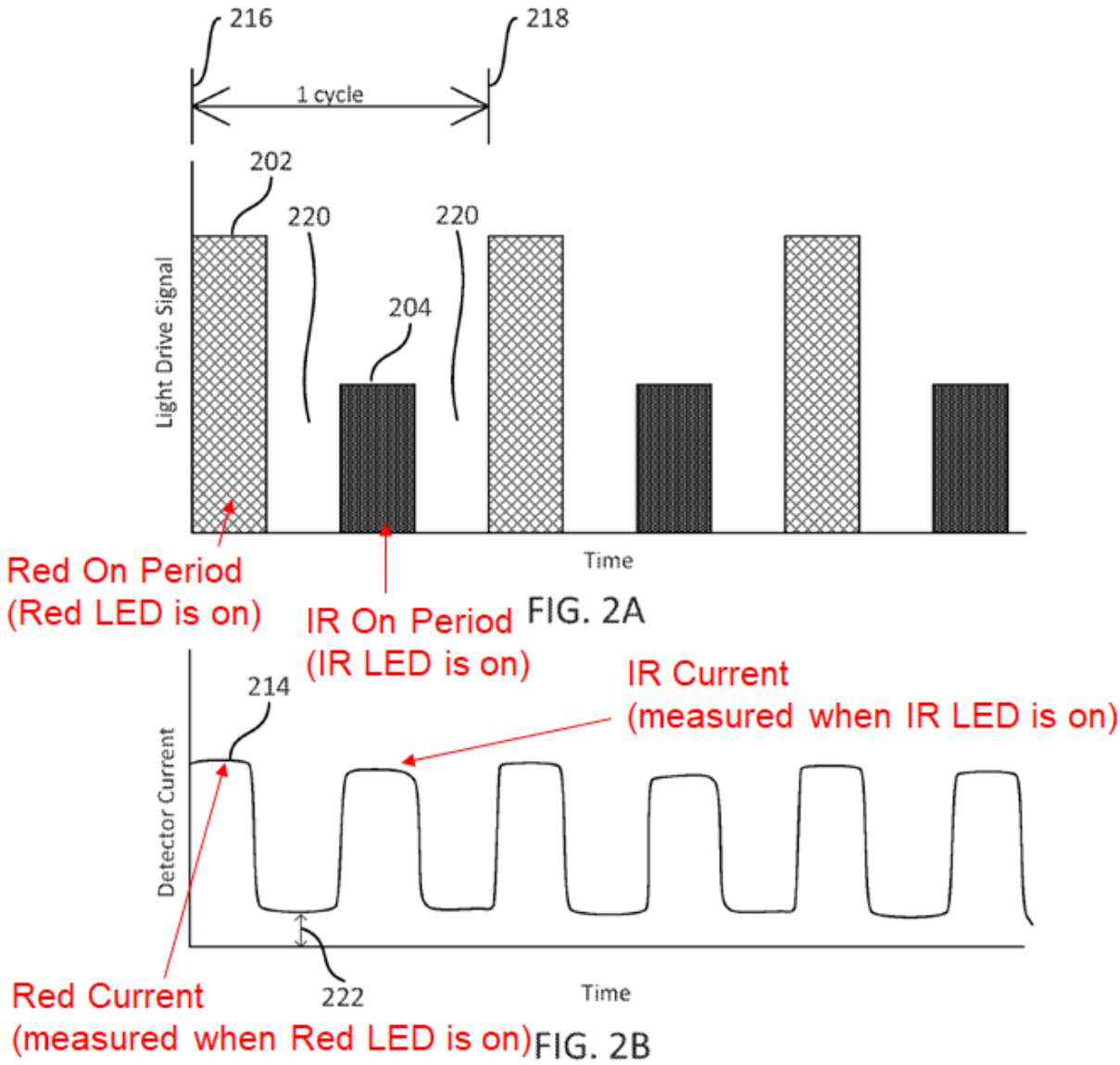

EX1021, 54-56; EX1003 ¶¶190-91; EX1027, Figs. 2A, 2B, 12:52-13:6.

k) Claim 1[j], 8[j], 15[j]

The Board found (and Omni did not dispute) that Lisogurski teaches this element. EX1011, 5-6, 43-44; EX1012, n.2.

As mentioned above, Lisogurski teaches a "dark subtraction" technique. EX1003 ¶192. The dark signal subtraction process removes noise (which Lisogurski

refers to as "ambient light") from an analog signal. EX1027, 6:7-19, 14:46-55; EX1003 ¶192. Specifically, the dark subtractor subtracts the dark signal (captured while the semiconductor sources are off) from each of the red and IR signals (captured while the semiconductor sources are on) to generate "adjusted Red and IR signals." EX1027, 13:60-14:10, 16:33-54 ("The system may subtract the…dark level from the levels received during red [or IR] 'on' portion[s]"). Thus, Lisogurski teaches subtracting ("*comparing*") the dark level ("*first signal*") from the IR or red level ("*second signal*"), which a POSITA would understand increases SNR ("*increase the signal-to-noise ratio*"). EX1003 ¶193, 237, 252. This is because SNR is calculated by dividing signal power by noise power, and decreasing noise necessarily increases SNR. EX1003 ¶193.

l) Claim 1[k], 10

Lisogurski discloses using LEDs "configured to emit photonic signals having one or more wavelengths of light (e.g.. Red and IR) into a subject's tissue." EX1027, 10:48-64. Lisogurski teaches "light may also include any wavelength within the radio, microwave, infrared, visible, ultraviolet, or X-ray spectra, and that any suitable wavelength of electromagnetic radiation may be appropriate for use with the present techniques." EX1027, 10:65-11:8. Lisogurski further explains that "[i]n some embodiments, the light source may include multiple LEDs of the same

wavelength, multiple LEDs of different wavelengths, any other suitable arrangement, or any combination thereof." EX1027, 19:24-39.

It would have been obvious to a POSITA to configure a wearable device, such as that disclosed in Lisogurski, with LEDs within the red and IR spectrum. EX1003 ¶¶196-98, 240. Lisogurski states that its device "may be configured to determine pulse rate, blood pressure, blood oxygen saturation (e.g., arterial, venous, or both), hemoglobin concentration (e.g., oxygenated, deoxygenated, and/or total), any other suitable physiological parameters, or any combination thereof." EX1027, 17:59-67. Lisogurski teaches that "the photonic signal interacting with the tissue is selected to be of one or more wavelengths that are attenuated by the blood in an amount representative of the blood constituent concentration," and that "[r]ed and infrared (IR) wave lengths may be used because it has been observed that highly oxygenated blood will absorb relatively less red light and more IR light than blood with a lower oxygen saturation." EX1027, 4:42-51. Lisogurski explains that this measurement of "blood oxygen saturation of hemoglobin in arterial blood" is performed by "comparing the intensities of two wavelengths at different points in the pulse cycle." *Id.*; EX1003 ¶197. A POSITA would have recognized using additional wavelengths could allow for more accurate measurements of, *e.g.*, blood oxygen levels, such that it would have been obvious to modify Lisogurski to use three optical wavelengths

for measuring at least a portion of the one or more of the physiological parameters. EX1003 ¶198.

Consistently with Lisogurski, Soller teaches that the "concentrations of oxygenated and deoxygenated hemoglobin are directly measured by absorption or reflection **using 2 to 4 wavelengths** of light in the near-infrared region of the hemoglobin spectrum." EX1030, 1:40-44; EX1003 ¶199, 240. Thus, both Lisogurski and Soller teach comparing two or more wavelengths to determine blood oxygen concentrations. EX1003 ¶200, 240. As Soller explains, and as a POSITA would have readily recognized, "using a larger set of wavelengths for analysis… compensates for variations in blood volume by accounting for factors relating to blood volume," and thus yields a more accurate measurement. EX1030, 5:50-54; EX1003 ¶¶200, 240. A POSITA therefore would have been motivated to use Soller's technique involving three or more wavelengths to yield a more accurate measurement, and could have implemented with reasonable expectation of success such a technique based on Soller and the POSITA's knowledge of the art. EX1003 ¶¶200, 240.

m) Claim 2, 15[k], 8[k], 9

Lisogurski, combined with Carlson and Soller, renders these elements/claims obvious. EX1003. ¶¶202-12, 253, 238, 239.

"[W]herein the plurality of semiconductor sources comprises six light emitting diodes, and wherein the plurality of semiconductor sources and the plurality of spatially separated detectors are located on one or more arcs." Soller discloses that its device may include "between 5 and 20 LEDs" (*i.e.*, "*six light emitting diodes*"). EX1030, 13:39-40; *see also id.*, 13:13-18 ("an array of, **e.g.**, eight light-emitting diode (LED) radiation sources"), 17:36-41 ("a circular array, **e.g.**, typically at least seven, of light-emitting diode (LED) radiation sources"). A POSITA would have understood "between 5 and 20 LEDs" necessarily includes six LEDs. EX1003 ¶204. Soller discloses Figure 11A, which illustrates ten LEDs:

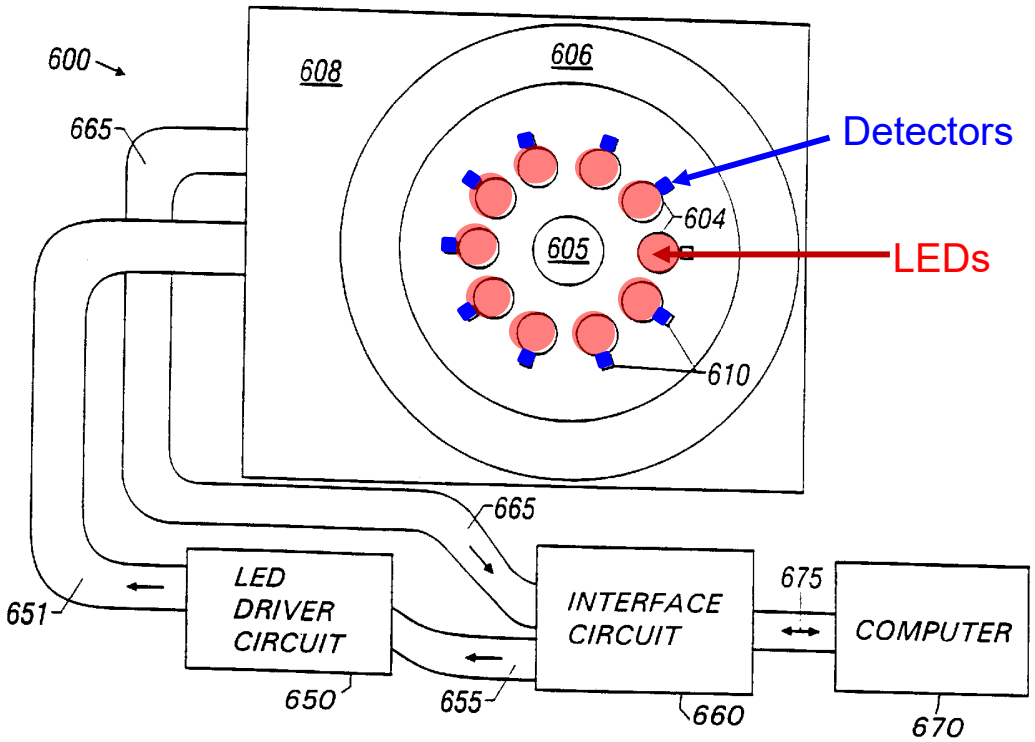

Figure 11A

EX1030, Fig. 11A, 17:36-60; EX1003 ¶202-05. A POSITA would understand that these disclosures would include, or, at a minimum render obvious, six LEDs. EX1003 ¶204.

Lisogurski also contemplates using more than one LED in its system and states that "[a]ny suitable configuration of light source 316 and detector 318 may be used," including one with "**multiple light sources and detectors**." EX1027, 17:37-45. A POSITA therefore would have been motivated to design a device and/or to modify Lisogurski's device to comprise six LEDs in the manner depicted by Soller.

EX1003 ¶210-11. Such a modification would have been a straightforward design choice involving the combination of known elements, and achieved with routine effort that would arrive at the benefits described by Soller, *i.e.*, allowing for the maximum amount of radiation to be emitted from the tissues and captured from the sample. EX1003 ¶¶210-11.

"[W]herein the plurality of semiconductor sources and the plurality of spatially separated detectors are located on one or more arcs." It would have been obvious to a POSITA to place the six LEDs and spatially separated detectors on one or more arcs. In fact, Soller depicts such an arrangement in Fig. 11A. EX1030, Fig. 11A; EX1003 ¶¶202-12.

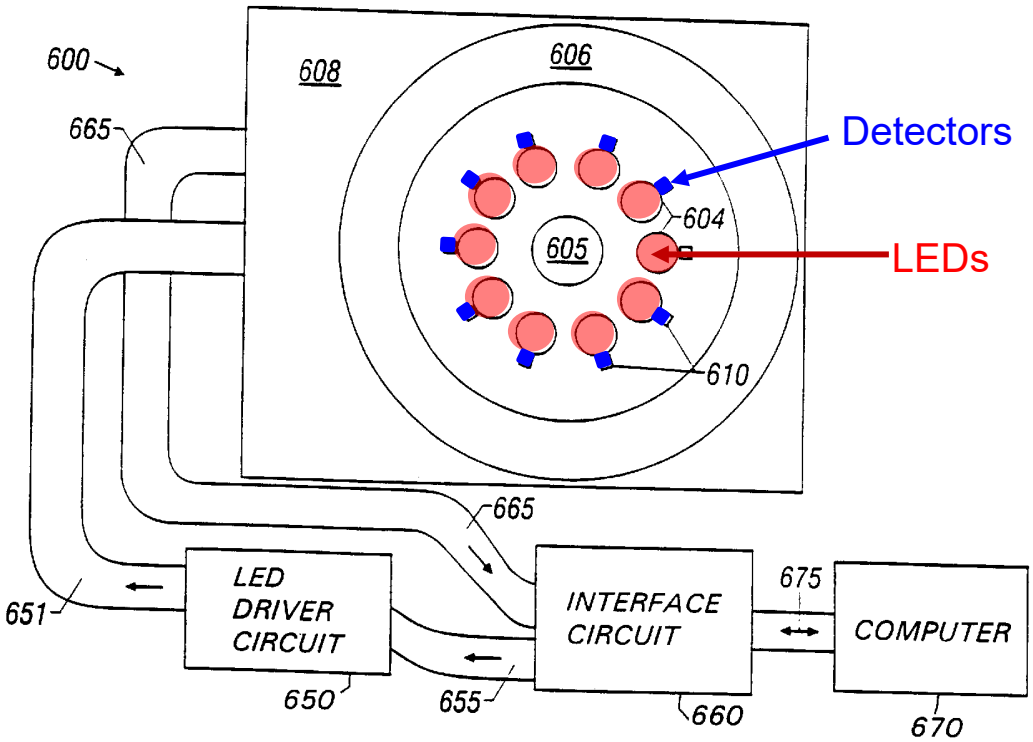

Figure 11A

The "**detectors**" in Fig. 11A are "reference detectors" "mounted on the side of each **LED** to measure and correct for variations in…intensity," EX1030, 17:36-50, but are still conventional photodiodes that a POSITA would have understood could be configured to serve as "reflectance detectors" to measure light received from the sample. EX1003 ¶¶205-11; EX1030, 17:42-60. It would have been obvious to modify Soller's detectors depicted in Fig. 11A to be reflectance detectors and a POSITA would have been motivated to make this modification as a routine design change. EX1003 ¶¶205-11. Soller itself directly teaches modifying the

arrangement of detectors. EX1030, 17:42-49 ("Fig. 11C shows an alternate mounting position for **reference detectors 610**, which allows more light to reach **reference detectors 610**"); *see also id.*, 18:47-58 ("Hematocrit measuring device 700 can be modified").

Thus, a POSITA would have been motivated to modify Lisogurski to include LEDs and detectors configured in one or more arcs, consistent with Soller's teachings that its device is designed to be a "body-worn sensor" that is "portable, hand-held, and easily manipulated" with improved accuracy, similar to Lisogurski's goal of increased portability. EX1030, 15:50-56; *supra* § VIII.A.1. Both systems are also designed to increase accuracy. *E.g.*, EX1030, 13:40-49, 15:31-40, 16:33-39 (Soller teaching a "radial, symmetric pattern" increases "coupling efficiency" and thereby improves accuracy); EX1003 ¶¶205-11. A POSITA would further have known arranging the LEDs and detectors in one or more arcs would not require significant time or cost-intensive changes to Lisogurski's system and would have had reasonable expectation of success. EX1003 ¶¶205-11,

n) Claim 3, 15[l]

The Board found (and Omni did not dispute) Lisogurski teaches a materially similar element. EX1008, 7, 25-26.

Lisogurski teaches "[r]ed and IR light emitting diodes (LEDs), for emitting light into the tissue of a subject to generate physiological signals," and that the "[r]ed

wavelength may be between about 600 nm and about 700nm, and the IR wavelength may between about 800nm and about 100nm." EX1027, 10:48-64. Lisogurski states that such light may be used to measure, for example, "blood oxygen saturation (e.g., arterial, venous, or both) [and] hemoglobin concentration (e.g., oxygenated, deoxygenated, and/or total)." EX1027, 17:59-67; EX1003 ¶¶214-15, 254.

Carlson's teachings on measuring oxy-hemoglobin and deoxy-hemoglobin are consistent with Lisogurski's. Carlson's method involves "measuring the absorption of reduced (Hb)—and oxidized (HbO_2) haemoglobin," which a POSITA would have recognized is deoxy-hemoglobin and oxy-hemoglobin, "at two optical wavelengths, where the relative absorption coefficients differ significantly, e.g. 660 nm and a second wavelength in the range of 800 to 1000 nm, preferably 890 nm or 950 nm." EX1028, [0003]; EX1003 ¶¶216, 254.

Soller similarly teaches measuring oxy-hemoglobin and deoxy-hemoglobin using light with wavelengths between 600 nm and 1000 nm. Soller discusses measuring hematocrit, and acknowledges that reported optical techniques at the time for measuring hematocrit involved "using only the concentrations of oxygenated and deoxygenated hemoglobin," which is done "using 2 to 4 wavelengths of light in the near infrared region of the hemoglobin spectrum." EX1030, 1:37-44. Soller teaches that radiation is emitted "in the visible and near-infrared spectral region," and that

the "radiation has wavelengths from 400 nm-2000 nm, from 500 nm-1100 nm, or from 700 nm-1000 nm." EX1030, 11:60-64; EX1003 ¶217-19, 254

o) Claim 4

Lisogurski and Soller teach this element.

Lisogurski explains that "[i]n some embodiments, the light source may include multiple LEDs of the same wavelength, multiple LEDs of different wavelengths, any other suitable arrangement, or any combination thereof." EX1027, 19:24-31. Lisogurski explains that measurement of "blood oxygen saturation of hemoglobin in arterial blood" is performed by "comparing the intensities of two wavelengths at different points in the pulse cycle." *Id.*, 4:48-51; EX1003 ¶¶220-21. Lisogurski teaches that "[i]n some embodiments" the wavelengths corresponding to "IR light may be more sensitive to pulsatile signals than red light" and vice versa. EX1027, 24:58-25:5. In such situations, Lisogurski teaches "it may be desired to monitor activity with the more sensitive available wavelength," which a POSITA would have understood as compensating for the sensitivity differences among different wavelengths by using the more sensitive wavelengths to improve the reading of the less sensitive wavelengths ("*at least one of the optical wavelengths is used to improve the measurement of the one or more physiological parameters using the output signal corresponding to the other two optical wavelengths*"). EX1027, 24:58-25:5, EX1003 ¶223.

As explained above, a POSITA would have been motivated to use Soller's technique involving three or more wavelengths to yield a more accurate measurement, and could have easily implemented such a technique based on Soller and the POSITA's knowledge of the art. EX1003 ¶224. Soller teaches that the "concentrations of oxygenated and deoxygenated hemoglobin are directly measured by absorption or reflection using 2 to 4 wavelengths of light in the near-infrared region of the hemoglobin spectrum." EX1030, 1:40-44; EX1003 ¶224. Soller explains, and a POSITA would have readily recognized, "using a larger set of wavelengths for analysis… compensates for variations in blood volume by accounting for factors relating to blood volume," and thus yields a more accurate measurement. EX1030, 5:50-54; EX1003 ¶225. Thus, Soller discloses improving measurement of at least one of the one or more physiological parameters using the output signal corresponding to the other two optical wavelengths. EX1003 ¶225.

Additionally, Lisogurski teaches using "a highly efficient first light source that is not at a wavelength of interest for physiological parameter determination may be used to control one or more second light sources at wavelengths of interest." EX1027, 7:58-67. This is another way of improving measurement of at least one of the one or more physiological parameters using the output signal corresponding to the other two optical wavelengths. EX1003 ¶223.

p) Claim 11

Lisogurski, Carlson, and Soller render obvious "*wherein the output . . . between 600 nm and 1000 nm to measure . . . deoxy-hemoglobin*." *Supra* §VII.B.3.d (cl.3).

Lisogurski and Soller render obvious "*wherein the output . . . other two optical wavelengths*." *Supra* §VII.B.3.o (cl.4).

q) Claim 16

Lisogurski alone or in combination with Soller renders obvious "*wherein the output . . . one or more of the physiological parameters*." *Supra* §§II.B.3.l (cl.1[k]/10).

Lisogurski and Soller render "*wherein the output signal . . . two optical wavelengths*." *Supra* §VII.B.3.o (cl.4).

C. Ground 2: Claims 5 and 12 would have been obvious over Lisogurski in view of Carlson, Soller, and Tran.

Claims 5 and 12 would have been obvious over Lisogurski in view of Carlson, Soller, and Tran. The Board already found claims containing substantially identical elements were obvious over Lisogurski in view of Carlson and Tran. EX1011, 48-49, 52-53; EX1012, n.2; EX1013, 11-12.

1. Overview of Ground 2

a) Tran

Tran discloses a heart monitoring system that uses a statistical analyzer to monitor patient health. EX1031, Abstract, Fig. 1, 8:28-53. The patient wears a monitoring device, like a watch, that communicates health information to a server, which passes it to a statistical analyzer. EX1031, 8:44-53, 9:23-54, 11:1-31, 54:14-57:13; EX1003 ¶96. The monitored health information includes pulse oximetry measurements. EX1031, 25:20-29, 25:36-43, 26:17-29, 36:62-37:13, 46:25-42, 60:58-61:37, 74:29-44. Tran's statistical analyzers can help, for example, "track a patient's risk of stroke or heart attacks." EX1031, 54:35-36. The analyzers use "artificial neural networks," a form of artificial intelligence, to help classify potential risks to warn patients or health-care providers. EX1031, 22:24-28, 74:45-46, 75:18-20, 94:57-65; EX1003 ¶97. Tran's monitoring device can be used with a smartphone so that the patient's data can be collected and transmitted when the patient is away from home. EX1031, 34:9-31, 33:50-34:40.

b) Motivation to combine

In the '484 IPR, the Board found in its first Final Written Decision (and Omni did not cross-appeal) that a POSITA would have been motivated to combine Tran with Carlson and Lisogurski. EX1011, 46-47; EX1012, n.2.

Lisogurski, Carlson, Soller, and Tran are analogous references, each describing techniques applicable to measurements taken by wearable optical sensing devices, such as pulse oximeters. EX1003 ¶¶104-105, 108. A POSITA would have considered the references together when implementing a system based on Lisogurski's teachings. EX1003 ¶¶106, 108. For example, a POSITA reading Lisogurski would have looked to other references disclosing additional techniques to improve the performance of the optical sensing systems as part of the ordinary design process for such devices. EX1003 ¶108.

Further, Lisogurski describes processing collected data to track a patient's health status. Market trends would have motivated a POSITA to find additional ways to use Lisogurski's tracked data in a mobile or remote scenario. EX1003 ¶106. Tran describes an "artificial neural network" that analyzes, among other things, pulse oximetry data, and provides warnings regarding a patients' condition. EX1031, 22:23-28; *compare* EX1031, 36:62-37:13 *with* EX1027, 26:15-25; *see also* EX1027, 15:43-65, 18:58-65. Tran explains this data analysis technique "provides an in-depth, cost-effective mechanism to evaluate a patient's cardiac condition." EX1031, 5:5-6. Tran's technique further allows for "[c]ertain cardiac conditions [to] be controlled, and in some cases predicted, before they actually occur." EX1031, 5:6-7. A POSITA would have been motivated to incorporate Tran's data analysis technique into Lisogurski to achieve the same benefits. EX1003 ¶¶105-08.

Modifications to Lisogurski's system based on Carlson, Soller, and Tran would have been within the knowledge and skill of a POSITA and would have had a reasonable expectation of success. EX1003 ¶108; *supra* §VII.B.2. Implementing Tran's data analysis techniques would have been a routine modification carrying reasonable expectation of success because such data analysis techniques were known in the art and could be implemented in an analogous system like Lisogurski's through routine modification. EX1003 ¶108.

2. Analysis of Ground 2

a) Claim 5[a], 12[a]

The Board found (and Omni did not dispute) that Lisogurski in view of Carlson and Tran teaches this element. EX1011, 48-49; EX1012, n.2; EX1013, 11.

Tran's data analysis technique applies to data collected from a patient using a "wearable patient monitoring appliance[]" to measure such data. EX1031, 9:23-54. Once collected, Tran's measurement system "feed[s] the data to a statistical analyzer such as a neural network." EX1031, 11:6-30. Tran's data driven analyzers may incorporate "engineered (artificial) neural networks," a form of "artificial intelligence." EX1031, 22:24-30; EX1003 ¶¶257-58, 265. Tran's neural networks analyze patient data to "flag potentially dangerous conditions," EX1031, 11:6-8, which "can be specified as an event or a pattern that can cause physiological…damage to the patient," EX1031, 11:16-19. Tran explains that when

such conditions occur, the system "displays a warning to a patient and connects the patient to the appropriate emergency response authority." EX1031, 87:28-37, 85:60-61, 88:48-50, 90:58-61.

A POSITA would have been motivated to use Tran's neural networks ("*artificial intelligence*") and associated techniques in the system from Lisogurski to improve the processing of physiological signals ("*at least a portion of the output signal*") and to process patient data and flag dangerous conditions. EX1003 ¶259. This combination would have required routine effort and would have achieved the benefits described by Tran and sought by Lisogurski, specifically, an improved wearable health sensor with optimal power consumption. EX1003 ¶¶106-08, 259, 265.

b) Claim 5[b], 12[b]

The Board found (and Omni did not dispute) that Tran teaches "perform[ing] pattern identification or classification." EX1011, 52-53; EX1013 11-12; EX1012, n.2. The Board found that Lisogurski in view of Carlson and Tran teaches a wearable device configured "to compare a property of at least some of the output signal to a threshold." EX1013, 3-7.

Tran explains that neural networks are "quite robust at recognizing user habits or patterns." EX1031, 23:39-50. Tran employs neural networks to analyze "a patient's vital signs," EX1031, 11:1-9; *id.*, 9:23-54, and flags patterns in these vital

signs if they represent possible dangerous conditions, EX1031, 11:1-19, EX1003 ¶¶262, 266. Tran's data analysis technique includes a Hidden Markov Model to "derive a set of reference pattern templates, [where] each template is representative of an identified pattern in a vocabulary set of reference treatment patterns." EX1031, 24:45-25:4, 80:24-81:3. Tran teaches the neural network and Hidden Markov Model (HMM) can be used together. EX1031, 24:58-60. Together, Tran's neural network and HMM perform "pattern identification or classification." EX1003 ¶262.

Lisogurski's system "may vary the algorithm used to determine a physiological parameter based, in part, on the cardiac cycle modulation technique," and "[i]f the cardiac cycle modulation technique detects the entire pulse, a different blood oxygen saturation detection algorithm may be used (e.g., a **regression based algorithm**)." EX1027, 9:36-45. Lisogurski teaches that a cardiac cycle modulation technique can be used to improve SNR of particular signals. EX1027, 25:49-55; 25:66-26:14. For example, Lisogurski states that "particular segments of a respiratory cycle may provide an increased signal to noise ratio" and that "it may be desired to correlate a modulation technique with respiration variations or both respiration variations and cardiac pulses." EX1027, 25:66-26:14. Lisogurski teaches that "when cardiac cycle modulation is properly selected, the accuracy of monitoring functions can be enhanced." EX1027, 41:40-58. A POSITA would have understood based on these teachings that Lisogurski teaches applying one or more

regression signal processing methodologies to at least a part of the output signal. EX1003 ¶263, 266.

D. Ground 3: Claim 17 would have been obvious over Lisogurski in view of Carlson, Soller, and Valencell-093.

Claim 17 would have been obvious over Lisogurski in view of Carlson, Soller, and Tran. The Board already found claims containing substantially identical elements were obvious over Lisogurski in view of Carlson and Valencell-093. EX1011, 59-60; EX1012, n.2.

1. Overview of Ground 3

a) Valencell-093

Valencell-093 discloses an optical sensor that can measure a user's heart rate and blood constituents (*e.g.*, blood oxygen level). EX1032, [0006], [0050], [0109]. Its objective is "to teach how to make a wearable monitor…that may provide accurate information on physiological conditions in the midst of environmental noise, such as noise from ambient light and/or sunlight." EX1032, [0112]. Valencell-093 teaches incorporating the optical sensor into several devices, including a wristband and a headband. EX1032, [0050], [0150], Fig. 23. The sensor can be surrounded by a light-guiding region that "helps direct light to and/or from the sensor module [] and a blood flow region within the body part." EX1032, [0152]. The light-guiding region can include a "reflector, such as a metal, metallic alloy …, [or] reflective plastic." EX1032, [0152].

b) Motivation to combine

In its first FWD for the '484 IPR, the Board found there would have been a motivation to combine Valencell-093 with Lisogurski, and Omni did not cross-appeal that finding. EX1011, 58-59; EX1012, n.2.

A POSITA would have considered Lisogurski, Carlson, and Soller together with Valencell-093; they are all directed to analogous systems with common applications and utility, and they all describe techniques for improving the power consumption of wearable optical sensing devices while improving their performance. EX1003 ¶¶109-110. Specifically, all four references concern analogous miniaturized wireless devices for mobile monitoring of physiological characteristics of a person, including pulse. EX1003 ¶¶109-10; EX1032 [0003], [0006], [0012].

Furthermore, as explained for Ground 1 (*supra* §§VII.B.1.a), Lisogurski describes a PPG system designed to optimize power consumption (EX1027, 1:4-6 3:50-53, 4:63-67), and increase battery life of wearable sensors, including wristband sensors (EX1027, 1:16-18, 4:15-20, 17:51-58). Lisogurski also teaches various techniques for increasing SNR of measured signals while minimizing power consumption (EX1027, 9:46-52), and these teachings would have motivated a POSITA to look to techniques used by other systems achieving the same objectives—part of the POSITA's natural design process. EX1003 ¶¶110-11.

Thus, a POSITA would have looked to Valencell-093, which describes, *e.g.*, configuring an optical sensor with certain techniques to maximize optical coupling and minimize relative motion between the device and the user's skin in a wearable device. EX1003 ¶111; EX1032, [0151]-[0152]. These techniques include using light-guiding elements to allow the sensors to be positioned in a manner that focuses on the user's blood flow and reduces detection of environmental noise. EX1032, [0151]-[0153]. Specific reasons why a POSITA would have added these features from Valencell-093 to Lisogurski are discussed below. EX1003 ¶¶110-11.

Incorporating the light-guiding region / reflective surface from Valencell-093 into Lisogurski's system, as modified by Carlson and Soller, would have been a straightforward and routine modification with a reasonable expectation of success. Specifically, a POSITA would have been familiar with the materials and coatings described by Valencell-093 and would have been able to integrate these materials into Lisogurski's wearable sensor unit with routine effort and expected results. EX1003 ¶¶111, 272.

2. Analysis of Ground 3

a) Claim 17

The Board found (and Omni did not dispute) that Valencell-093 teaches a materially similar element. EX1011, 59-60; EX1012, n.2.

Valencell-093 teaches that a sensor can be surrounded by a light guiding region to "help[] **direct light to and/or from** the sensor module [] and **a blood flow region within the body part**." EX1032, [0152]. This region can include a "**reflector**, such as a metal, metallic alloy…, [or] reflective plastic." *Id.* Thus, Valencell-093 teaches use of "reflective surfaces" to receive and redirect at least some of the output optical light from the plurality of semiconductor sources. EX1003 ¶270. Examples are shown in the figures below.

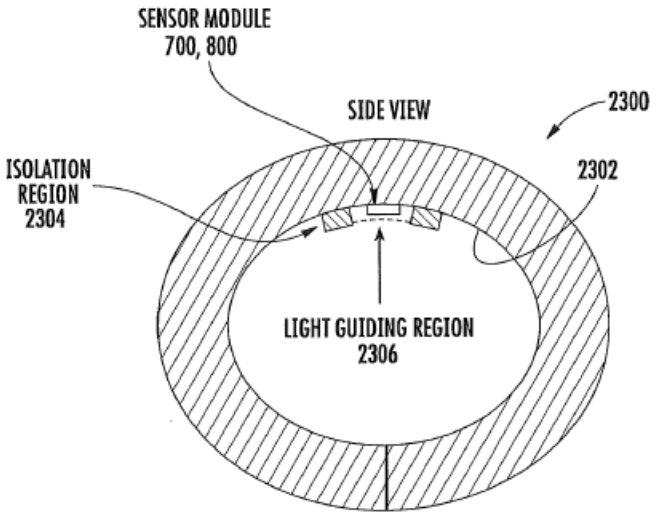

FIG. 24

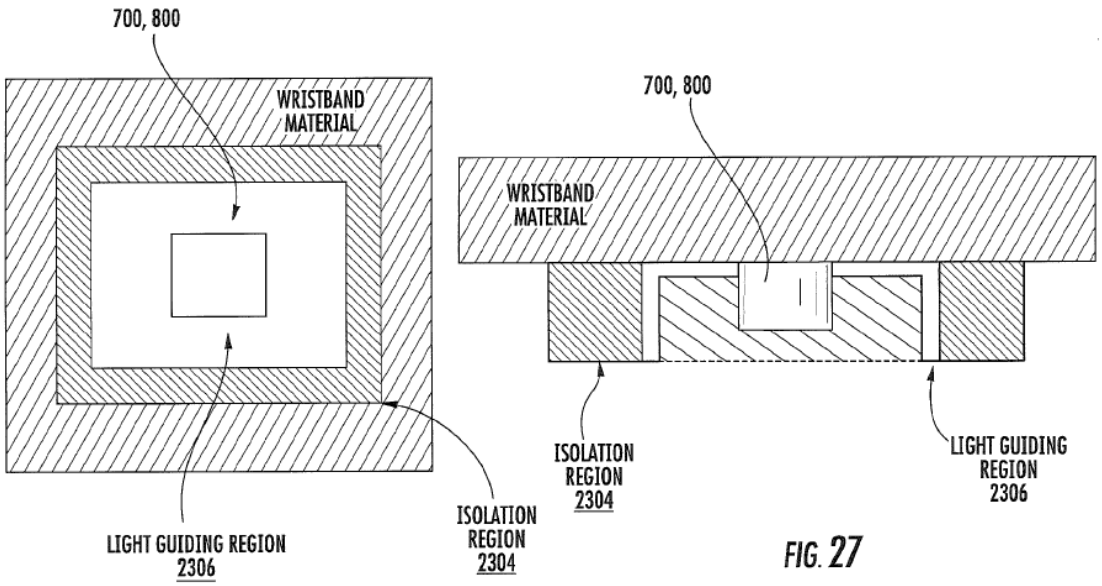

EX1032, Figs. 24, 26, 27.

The light-guiding region in Valencell-093's system assists in coupling the sensor to the body part (*e.g.*, wrist) and in reducing interference from environmental noise. EX1032, [0153]. As Valencell-093 explains, using a reflective surface helps increase SNR. *Id*. This guidance alone would have motivated a POSITA to implement the reflective surface described by Valencell-093 in the combined system of Lisogurski, Soller, and Carlson. EX1003 ¶¶271-73. A POSITA would also have recognized that adding a reflective surface to Lisogurski (as Valencell-093 teaches) would improve signal measurement efficiency and complement operation of Lisogurski's system. EX1003 ¶271; *see* EX1027, 15:53-55.

A POSITA also would have been familiar with the reflective materials and/or coatings described by Valencell-093 (EX1032, [0152]) and would have been able to

integrate them into Lisogurski's device with routine effort. EX1003 ¶272. A POSITA would have considered the addition of a reflective surface to Lisogurski's sensor to be a predictable arrangement of known elements, with each performing the same function it was known to perform and yielding what one would expect from the arrangement. EX1003 ¶272.

E. Ground 4: Claims 6, 7, 13, 14, and 18-20 would have been obvious over Lisogurski in view of Carlson, Soller, Tran, and Valencell-093.

1. Overview of Ground 4

a) Motivation to Combine

For the reasons discussed *supra* in §§VII.B.2, VII.C.1, and VII.D.1, Lisogurski, Carlson, Soller, Tran, and Valencell-093 are all analogous systems with common applications and utility, and a POSITA would have had a reasonable expectation of success combining these references. EX1003 ¶¶113-14. Specifically, each of these references describes techniques for improving the performance of non-invasive optical, portable sensing devices that can be used remotely to monitor physiological parameters. EX1003 ¶113. A POSITA would have considered these references together because they are directed to the same applications (*e.g.*, mobile monitoring of physiological characteristics of a person, including pulse and blood oxygen components). *Id.* Specific reasons why a POSITA would have combined features from Carlson, Soller, Tran, and Valencell-093 are discussed below.

2. Analysis of Ground 4

a) Claim 6, 13

Claims 5 and 12 would have been obvious in view of Lisogurski, Carlson, Soller, and Tran (Ground 2), and claim 16 would have been obvious in view of Lisogurski, Carlson, and Soller (Ground 1). *Supra* §§VII.B.3.q, VII.C.2. Modifying Lisogurski's device to include a reflective surface to receive and redirect at least some of the output optical light from the plurality of semiconductor sources as disclosed in Valencell-093 (Ground 3) would also have been obvious. *Supra* §VII.D.2. Accordingly, claims 6 and 13 would have been obvious over Lisogurski in view of Carlson, Soller, Tran, and Valencell-093. EX1003 ¶¶274-75, 285.

b) Claim 18[a], 18[b]

Claim 17 would have been obvious over Lisogurski in view of Carlson, Soller, and Valencell-093 (Ground 3). *Supra* §VII.D.2. Modifying Lisogurski's system to use artificial intelligence in making decisions associated with some of the at least a portion of the output signal and to perform pattern identification or classification, or wherein the system is configured to apply one or more regression signal processing methodologies to at least a part of the output signal, would have been obvious over Lisogurski in view of Carlson, Soller, and Tran (Ground 2). *Supra* §VII.C.2. Combining these modifications would have been routine for a POSITA, and would

have involved simply optimizing a device based on known techniques, device configurations, and methods. EX1003 ¶¶287-90.

c) Claim 19

Claim 18 would have been obvious over Lisogurski in view of Carlson, Soller, Tran, and Valencell-093 (Ground 4). *Supra* §VII.E.2.b.

As to the additional element of claim 19, the Board found (and Omni did not dispute) that Lisogurski in view of Carlson and Tran teaches a wearable device configured "to compare a property of at least some of the output signal to a threshold." EX1013, 3-7; *see also* EX1011, 50-51; EX1012, n.2; EX1013, 11-12.

Lisogurski discloses comparing the detected signals to a variety of thresholds. EX1003 ¶¶292-93. For example, "the blood oxygen saturation may be compared to a threshold or target value, such as threshold 830," EX1027, 24:41-43, and the outcome of that comparison may be used to change the device's mode of operation, EX1027, 24:43-57. Further, Lisogurski teaches comparing the output signal to thresholds to identify portions of that signal of interest for further processing or that could be used to change the light source modulation. EX1027, 40:42-41:39, claims 15-18. Lisogurski explains that the measurement system "may use historical information from previous pulse cycles in determining thresholds" (*i.e.*, a "*stored data set*") and may employ "conventional servo algorithms, other suitable criteria,

or any combination thereof" in making such a comparison to these thresholds. EX1027, 40:42-41:14; EX1003 ¶293.

Similarly, Tran's allows the user to choose "a condition that they would like to be alerted to and [] provid[e] the parameters (e.g., **threshold value** for the reading) for alert generation." EX1031, 27:21-23. If such a condition is met, the user receives an alert according to their set preference. EX1027, 27:26-28. A POSITA would have recognized that the wearable device in Tran compares measured data against a pre-set threshold value (*i.e.*, "*appl[ies] a threshold function to a comparison with a stored data set*") and would have been motivated to implement this technique to improve Lisogurski's own threshold value comparison. EX1003 ¶294. Doing so would have required routine effort and would have been an obvious combination of elements. EX1003 ¶294.

d) Claim 7, 14, 20

Claims 6, 13, and 19 would have been obvious in view of Carlson, Soller, Tran, and Valencell-093 (Ground 4). *Supra* §§VII.E.2.a, VII.E.2.c. The Board found (and Omni did not cross-appeal) Lisogurski (or Lisogurski and Carlson) teaches "increas[ing] the signal-to-noise ratio … by increasing a pulse rate of at least one of the plurality of semiconductor sources from an initial pulse rate." EX1011, 28-43; EX1012, n.2; *see also* EX1008, 26-35 (similar). The addition of "non-zero" does not save these claims from unpatentability.

Lisogurski teaches dynamically adjusting the parameters of the light emitted by the LEDs to ensure adequate SNR. EX1027, 9:46-52, 37:6-22. These parameters include "firing rate." EX1027, 27:44-52, 2:1-2, 8:29-35, 25:46-55. A POSITA would have understood Lisogurski's "firing rate" is the same as the claimed "pulse rate." EX1003 ¶¶276-77. Lisogurski teaches a first modulation mode that changes to a second modulation mode with different light drive parameters (like firing/pulse rate) when the system "detect[s] a change in background noise [or]...ambient light." EX1027, 37:6-20. A POSITA would have understood from Lisogurski that its light source must have an initial firing rate ("*initial…pulse rate*") that the system can later change, and that this initial firing rate is not limited to a system with zero as the starting pulse rate. EX1003 ¶278; EX1027, 1:67-2:3, 27:44-55, 27:39-43, 29:25-37, 24:49-55, 35:10-49.

Lisogurski further describes embodiments where the firing rate of an LED is correlated to the sampling rate of an analog-to-digital converter in the detector and teaches that the sampling rate can be increased/decreased. EX1027, 33:47-49, 11:43-46; 11:52-55, 35:27-31 (decreasing the duration of the 'off' periods (*i.e., increasing the emitter firing rate relates to an increased sampling rate*)). A POSITA would have understood an increased sampling rate results in more samples, which improves SNR because the noise is averaged across more samples. EX1003 ¶¶279, 286, 296; EX1027, 33:53-58 (increasing sampling rate "may result in more accurate

and reliable physiological information"), 9:46-52, 35:7-9. Moreover, Lisogurski teaches "cardiac cycle modulation," a technique that improves SNR in the same way as the coordination of the sampling rate and the firing rate (as the Board found). EX1008, 28, EX1011, 28-43; EX1027, 25:46-61; EX1003 ¶280.[6] Thus, a POSITA would have understood Lisogurski teaches increasing the firing rate of the LEDs to improve SNR, regardless of whether the starting firing rate is zero ("off") or simply a lower, non-zero rate. EX1003 ¶¶278-79, 286, 296; EX1027, 1:67-2:3, 27:44-55, 27:39-43, 29:25-37, 24:49-55, 35:10-49..

To the extent Lisogurski alone does not teach this limitation, Carlson renders it obvious. Carlson teaches improving SNR by reducing noise from ambient light. *Supra* §VII.B.1.b. Carlson further teaches ambient light, like sunlight, may have a frequency of 0-120 Hz. EX1028, [0067]-[0069]. Carlson teaches selecting a pulse frequency ("*pulse rate*") for the LEDs "in such a way that it is outside the frequency spectrum of sunlight and ambient light," *i.e.*, greater than 120 Hz ("*initial non-zero pulse rate*"). EX1028, [0069]; EX1003 ¶¶281-82, 286, 296. Carlson suggests the

[6] Omni's expert in the '533 IPR agreed that "[g]enerally speaking, the faster the modulation, the faster the pulse rate, the lower the background noise." EX1021, 50 (quoting EX1041, 37:13-38:3). Again, this statement was not limited to situations where the pulse rate increases from zero.

pulse frequency can be "1000 Hz" or "any other frequency, as e.g. 2000 Hz or even higher." EX1028, [0069]. Carlson describes "shifting the [pulse] frequency of the emitted light" during operation of the device so it is "substantially outside of frequency of noise and/or environmental signals," like sunlight. EX1028, claims 10-11, [0067]-[0069]. A POSITA would have understood Carlson teaches increasing the pulse rate from an initial, non-zero pulse rate to improve "significantly the Signal-to-Noise and Signal-to-Background ratio." EX1028, [0069]; EX1003 ¶282.

Lisogurski and Carlson identify the same problem (noise from ambient light) and the need to offset the noise to improve SNR. EX1003 ¶283; EX1027, 9:46-60; EX1028, [0067]-[0069]. Modifying Lisogurski's system in the manner suggested by Carlson would have required only routine effort; indeed, Lisogurski alone teaches that increasing the firing rate of the LEDs can help improve SNR in response to changes in environmental conditions. EX1027, 1:67-2:3, 5:55-61, 9:46-60, 37:6-18; EX1003 ¶¶277-80, 283.

VIII. SECONDARY CONSIDERATIONS

Petitioner is unaware of any secondary considerations (EX1003 ¶80), but reserves the right to respond if Omni identifies any.

IX. CONCLUSION

Petitioner has established a reasonable likelihood that the Challenged Claims are unpatentable, and respectfully requests IPR be instituted.

Dated: September 24, 2025

Respectfully Submitted,

/s/ *Jaysen S. Chung*
Jaysen S. Chung, *Lead Counsel*
Reg. Number: 68,199
Gibson, Dunn & Crutcher LLP
One Embarcadero Center, Suite 2600
San Francisco, CA 94111-3715
Tel: 415-393-8271
JSChung@gibsondunn.com

Brian Rosenthal (*Notice of Intent to Designate Provisionally Recognized PTAB Attorney forthcoming*)
Gibson, Dunn & Crutcher LLP
200 Park Avenue
New York, NY 10166-0193
Tel: 212-351-2339
BRosenthal@gibsondunn.com

Y. Audrey Yang
Reg. Number: 74,393
Gibson, Dunn & Crutcher LLP
2001 Ross Ave., Suite 2100
Dallas, TX 75201
Tel: 214-698-3215
AYang@gibsondunn.com

Counsel for Petitioner WHOOP, Inc.

APPENDIX A: CHALLENGED CLAIM LISTING

No.	Limitation
1[pre]	A system for measuring one or more physiological parameters and for use with a smart phone or tablet, the system comprising:
1[a]	a wearable device adapted to be placed on teeth, a wrist, or an ear of a user, and including a light source comprising a driver and a plurality of semiconductor sources, the plurality of semiconductor sources configured to generate an output optical light having a plurality of optical wavelengths;
1[b]	the wearable device comprising one or more lenses configured to receive at least a portion of the output optical light and to deliver a lens output light to tissue;
1[c]	the wearable device further comprising a detection system configured to receive at least a portion of the lens output light reflected from the tissue and to generate an output signal having a signal-to-noise ratio, wherein the detection system is configured to be synchronized to the light source;
1[d]	wherein the detection system comprises a plurality of detectors that are spatially separated from each other, and wherein at least one analog to digital converter is coupled to at least one of the spatially separated detectors;
1[e]	the smart phone or tablet comprising a wireless receiver, a wireless transmitter, a display, a speaker, a voice input module, a microprocessor and a touch screen, the smart phone or tablet configured to receive and process at least a portion of the output signal, wherein the smart phone or tablet is configured to store and display the processed output signal, and wherein at least a portion of the processed output signal is configured to be transmitted over a wireless transmission link;
1[f]	wherein the output signal is indicative of one or more of the physiological parameters;
1[g]	the wearable device configured to increase the signal-to-noise ratio by increasing light intensity of at least one of the semiconductor sources from an initial light intensity;
1[h]	the detection system further configured to: generate a first signal responsive to light received while the semiconductor sources are off,

No.	Limitation
1[i]	generate a second signal responsive to light received while at least one of the semiconductor sources is on; and
1[j]	increase the signal-to-noise ratio by comparing the first signal and the second signal; and
1[k]	wherein the plurality of optical wavelengths comprises three optical wavelengths for measuring at least a portion of the one or more of the physiological parameters, wherein the optical wavelengths comprise near infrared or visible wavelengths.
2	The system of claim 1, wherein the plurality of semiconductor sources comprises six light emitting diodes, and wherein the plurality of semiconductor sources and the plurality of spatially separated detectors are located on one or more arcs.
3	The system of claim 2, wherein the output optical light comprises wavelengths between 600 nm and 1000 nm to measure a level of oxy-hemoglobin and deoxy-hemoglobin.
4	The system of claim 3, wherein the output signal corresponding to at least one of the optical wavelengths is used to improve measurement of at least one of the one or more physiological parameters using the output signal corresponding to the other two optical wavelengths.
5[a]	The system of claim 4, wherein the system is configured to use artificial intelligence to process some of the at least a portion of the output signal; and
5[b]	wherein the system is configured to perform pattern identification or classification, or wherein the system is configured to apply one or more regression signal processing methodologies to at least a part of the output signal.
6	The system of claim 5, wherein the wearable device further comprises a reflective surface to receive and redirect at least some of the output optical light from the plurality of semiconductor sources.
7	The system of claim 6, wherein the wearable device is further configured to increase the signal-to-noise ratio by increasing a pulse rate of at least one of the semiconductor sources from an initial non-zero pulse rate.

No.	Limitation
8[pre]	A system for measuring one or more physiological parameters and for use with a smart phone or tablet, the system comprising:
8[a]	a wearable device adapted to be placed on a wrist or an ear of a user, including a light source comprising a driver and a plurality of semiconductor sources that are light emitting diodes, the light emitting diodes configured to generate an output optical light having one or more optical wavelengths;
8[b]	the wearable device comprising one or more lenses configured to receive at least a portion of the output optical light and to deliver a lens output light to tissue;
8[c]	the wearable device further comprising a detection system configured to receive at least a portion of the lens output light reflected from the tissue and to generate an output signal having a signal-to-noise ratio, wherein the detection system is configured to be synchronized to the light source;
8[d]	wherein the detection system comprises a plurality of detectors that are spatially separated from each other, and wherein at least one analog to digital converter is coupled to at least one of the spatially separated detectors;
8[e]	the smart phone or tablet comprising a wireless receiver, a wireless transmitter, a display, a microphone, a speaker, a microprocessor and a touch screen, the smart phone or tablet configured to receive and process at least a portion of the output signal, wherein the smart phone or tablet is configured to store and display the processed output signal, and wherein at least a portion of the processed output signal is configured to be transmitted over a wireless transmission link;
8[f]	wherein the output signal is indicative of one or more of the physiological parameters;
8[g]	the wearable device configured to increase the signal-to-noise ratio by increasing light intensity of at least one of the plurality of semiconductor sources from an initial light intensity; and
8[h]	the detection system further configured to: generate a first signal responsive to light received while the light emitting diodes are off,

No.	Limitation
8[i]	generate a second signal responsive to light received while at least one of the light emitting diodes is on, and
8[j]	increase the signal-to-noise ratio by comparing the first signal and the second signal; and
8[k]	wherein the plurality of semiconductor sources comprises six light emitting diodes.
9	The system of claim 8, wherein the plurality of semiconductor sources and the plurality of spatially separated detectors are located on one or more arcs.
10	The system of claim 9, wherein the output optical light comprises three optical wavelengths for measuring at least a portion of the one or more of the physiological parameters, and wherein the optical wavelengths comprise near infrared and visible wavelengths.
11	The system of claim 8, wherein the output optical light comprises wavelengths between 600 nm and 1000 nm to measure a level of oxy-hemoglobin and deoxy-hemoglobin, and wherein the output signal corresponding to at least one of the optical wavelengths is used to improve measurement of the one or more physiological parameters using the output signal corresponding to the other two optical wavelengths.
12[a]	The system of claim 11 wherein the system is configured to use artificial intelligence in making decisions associated with some of the at least a portion of the output signal; and
12[b]	wherein the system is configured to perform pattern identification or classification, or wherein the system is configured to apply one or more regression signal processing methodologies to at least a part of the output signal.
13	The system of claim 12, wherein the wearable device further comprises a reflective surface positioned to receive and redirect at least some of the output optical light from the plurality of semiconductor sources.

No.	Limitation
14	The system of claim 13, wherein the wearable device is further configured to increase the signal-to-noise ratio by increasing a pulse rate of at least one of the semiconductor sources from an initial non-zero pulse rate.
15[pre]	A system for measuring one or more physiological parameters and for use with a smart phone or tablet, the system comprising:
15[a]	a wearable device adapted to be placed on teeth, a wrist, or an ear of a user, including a light source comprising a driver and a plurality of semiconductor sources that are light emitting diodes, the light emitting diodes configured to generate an output optical light having one or more optical wavelengths;
15[b]	the wearable device comprising one or more lenses configured to receive at least a portion of the output optical light and to deliver a lens output light to tissue;
15[c]	the wearable device further comprising a detection system configured to receive at least a portion of the lens output light reflected from the tissue and to generate an output signal having a signal-to-noise ratio, wherein the detection system is configured to be synchronized to the light source;
15[d]	wherein the detection system comprises a plurality of detectors that are spatially separated from each other, and wherein at least one analog to digital converter is coupled to at least one of the spatially separated detectors;
15[e]	the smart phone or tablet comprising a wireless receiver, a wireless transmitter, a display, a microphone, a speaker, a microprocessor and a touch screen, the smart phone or tablet configured to receive and process at least a portion of the output signal, wherein the smart phone or tablet is configured to store and display the processed output signal, and wherein at least a portion of the processed output signal is configured to be transmitted over a wireless transmission link;
15[f]	wherein the output signal is indicative of one or more of the physiological parameters;
15[g]	the wearable device configured to increase the signal-to-noise ratio by increasing light intensity of at least one of the plurality of semiconductor sources from an initial light intensity; and

No.	Limitation
15[h]	the detection system further configured to: generate a first signal responsive to light received while the light emitting diodes are off,
15[i]	generate a second signal responsive to light received while at least one of the light emitting diodes is on, and
15[j]	increase the signal-to-noise ratio by comparing the first signal and the second signal;
15[k]	wherein the plurality of semiconductor sources comprises six light emitting diodes, and wherein the plurality of semiconductor sources and the plurality of spatially separated detectors are located on one or more arcs; and
15[l]	wherein the output optical light comprises wavelengths between 600 nm and 1000 nm to measure a level of oxy-hemoglobin and deoxy-hemoglobin.
16	The system of claim 15, wherein the output optical light comprises three optical wavelengths for measuring at least a portion of the one or more of the physiological parameters, and wherein the output signal corresponding to at least one of the optical wavelengths is used to improve measurement of at least one of the one or more physiological parameters using the output signal corresponding to the other two optical wavelengths.
17	The system of claim 16, wherein the wearable device further comprises a reflective surface to receive and redirect at least some of the output optical light from the plurality of semiconductor sources.
18[a]	The system of claim 17, wherein the system is configured to use artificial intelligence in making decisions associated with some of the at least a portion of the output signal; and
18[b]	wherein the system is configured to perform pattern identification or classification, or wherein the system is configured to apply one or more regression signal processing methodologies to at least a part of the output signal.
19	The system of claim 18, wherein the system is at least in part configured to detect an object, and a property of at least some of the output signal is compared by at least one of the wearable device, the smart phone, and the tablet to a threshold.

No.	Limitation
20	The system of claim 19, wherein the wearable device is further configured to increase the signal-to-noise ratio by increasing a pulse rate of at least one of the semiconductor sources from an initial non-zero pulse rate.

CERTIFICATION UNDER 37 C.F.R. § 42.24(d)

Under the provisions of 37 C.F.R. § 42.24(d), the undersigned attorney hereby certifies that the word count for Sections I and III-IX of the foregoing Petition for *Inter Partes* Review is 13,987, according to the word count tool in Microsoft Word.

DATED: September 26, 2025

Respectfully Submitted,

/s/ Jaysen S. Chung

Jaysen S. Chung, *Lead Counsel*
Reg. Number: 68,199
Gibson, Dunn & Crutcher LLP
One Embarcadero Center, Suite 2600
San Francisco, CA 94111-3715
Tel: 415-393-8271
JSChung@gibsondunn.com

Attorney for Petitioner WHOOP, Inc.

CERTIFICATE OF SERVICE

The undersigned certifies service pursuant to 37 C.F.R. §§ 42.6(e) and 42.105(a), (b) on the Patent Owner via FedEx Priority Overnight of a copy of this Petition for *Inter Partes* Review and supporting materials at the correspondence address of record for the ’455 patent in the USPTO Patent Center:

109543 - Brooks, Kushman P.C./Cheetah Omni MedSci
150 W 2nd St., Suite 400N
Royal Oak, MI 48067
United States

A courtesy copy was also sent via electronic mail to Patent Owner’s litigation counsel at the following addresses:

Daniel S. Stringfield
dstringfield@nixonpeabody.com
Timothy P. Maloney
tmaloney@nixonpeabody.com
Daniel D. Georgiev
dgeorgiev@nixonpeabody.com
Peter Krusiewicz
pkrusiewicz@nixonpeabody.com
Corey T. Leggett
cleggett@nixonpeabody.com
Elizabeth M. Chiaviello
echiaviello@nixonpeabody.com
Benjamin R. Holt
bholt@nixonpeabody.com

NIXON PEABODY LLP

Stephen B. Brauerman
sbrauerman@bayardlaw.com
Ronald P. Golden III
rgolden@bayardlaw.com
Emily L. Skaug
eskaug@bayardlaw.com

BAYARD, P.A.

Ty Wilson
twilson@davisfirm.com
William E. Davis , III
bdavis@davisfirm.com

DAVIS P.C.

DATED: September 26, 2025

Respectfully Submitted,

/s/ Jaysen S. Chung

Jaysen S. Chung, *Lead Counsel*
Reg. Number: 68,199
Gibson, Dunn & Crutcher LLP
One Embarcadero Center, Suite 2600
San Francisco, CA 94111-3715
Tel: 415-393-8271
JSChung@gibsondunn.com

Attorney for Petitioner WHOOP, Inc.