US010856886B2

(12) **United States Patent**
Dacosta et al.

(10) **Patent No.: US 10,856,886 B2**
(45) **Date of Patent: Dec. 8, 2020**

(54) **ALIGNMENT GUIDES, CUT GUIDES, SYSTEMS AND METHODS OF USE AND ASSEMBLY**

(71) Applicant: **Paragon 28, Inc.**, Englewood, CO (US)

(72) Inventors: **Albert Dacosta**, Lone Tree, CO (US); **Laura Zagrocki Brinker**, Lone Tree, CO (US); **Randy Allard**, Golden, CO (US)

(73) Assignee: **Paragon 28, Inc.**, Englewood, CO (US)

(*) Notice: Subject to any disclaimer, the term of this patent is extended or adjusted under 35 U.S.C. 154(b) by 0 days.

(21) Appl. No.: **16/516,857**

(22) Filed: **Jul. 19, 2019**

(65) **Prior Publication Data**

US 2019/0336140 A1 Nov. 7, 2019

Related U.S. Application Data

(63) Continuation of application No. PCT/US2018/064368, filed on Dec. 7, 2018.
(Continued)

(51) **Int. Cl.**
A61B 17/15 (2006.01)
A61B 17/16 (2006.01)
A61B 17/17 (2006.01)

(52) **U.S. Cl.**
CPC ***A61B 17/15*** (2013.01); ***A61B 17/1682*** (2013.01); *A61B 17/1775* (2016.11)

(58) **Field of Classification Search**
CPC A61B 17/15; A61B 17/151; A61B 17/152; A61B 17/1682; A61B 17/17; A61B 17/1739; A61B 17/1775
See application file for complete search history.

(56) **References Cited**

U.S. PATENT DOCUMENTS

8,425,574 B2 4/2013 Huebner
9,936,994 B2 * 4/2018 Smith A61B 17/8061
(Continued)

FOREIGN PATENT DOCUMENTS

WO 2017011656 1/2017
WO 2017031000 2/2017
WO 2017031020 2/2017

OTHER PUBLICATIONS

Paragon 28 "Surgical Technique Guide: Lapidus Cut Guide System," http://www.paragon28.com/products/lapidus-cut-guide-system/, Jul. 5, 2018.

(Continued)

Primary Examiner — Eric S Gibson
(74) *Attorney, Agent, or Firm* — Heslin Rothenberg Farley & Mesiti P.C.; Jacquelyn A. Graff, Esq.

(57) **ABSTRACT**

Guides, systems, and methods for maintaining, correcting and/or fusing joint deformities are disclosed. The guide system including a cut guide, an alignment guide, and at least one directional wire. The cut guide including a base portion, an extension member extending away from a bottom surface of the base portion, and at least one arm extending away from an end of the base portion. The alignment guide, including a base portion, a first extension member extending away from a bottom surface of the base portion in a first direction, and a second extension member extending away from the bottom surface of the base portion in a second direction. Methods of using a guide system for maintaining, correcting and/or fusing joint deformities are also disclosed.

33 Claims, 61 Drawing Sheets

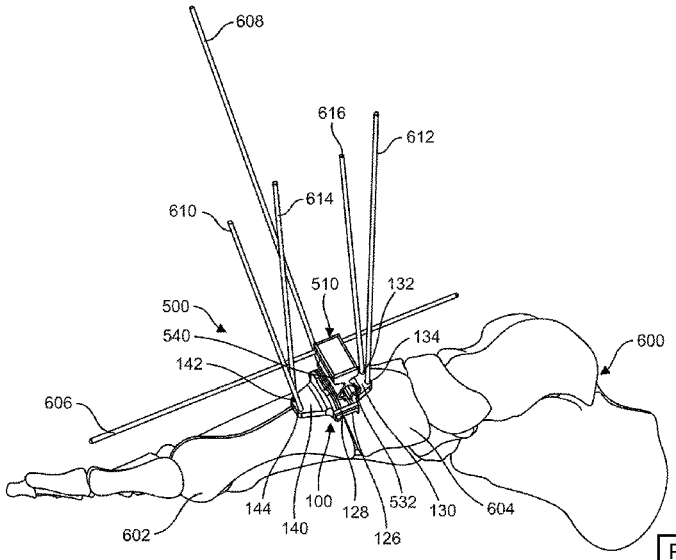

Paragon 28, Inc. v. Treace Medical Concepts, Inc.
PGR2026-00022
Treace Ex. 2006

Related U.S. Application Data

(60) Provisional application No. 62/595,155, filed on Dec. 6, 2017.

(56) **References Cited**

U.S. PATENT DOCUMENTS

10,335,220	B2 *	7/2019	Smith	A61B 17/15
10,342,590	B2 *	7/2019	Bays	A61B 17/8866
10,575,862	B2 *	3/2020	Bays	A61B 17/152
2007/0265634	A1	11/2007	Weinstein	
2015/0223852	A1	8/2015	Lietz et al.	
2016/0192950	A1 *	7/2016	Dayton	A61B 17/15 606/87
2016/0235414	A1 *	8/2016	Hatch	A61B 17/151
2017/0042598	A1 *	2/2017	Santrock	A61B 17/151
2017/0056031	A1 *	3/2017	Awtrey	A61B 17/1703
2017/0079669	A1 *	3/2017	Bays	A61B 17/15
2017/0172638	A1 *	6/2017	Santrock	A61B 17/152
2018/0317992	A1 *	11/2018	Santrock	A61B 17/1682
2019/0274745	A1 *	9/2019	Smith	A61B 17/151
2019/0328435	A1 *	10/2019	Bays	A61B 17/15
2019/0328436	A1 *	10/2019	Bays	A61B 17/1728
2019/0336140	A1 *	11/2019	Dacosta	A61B 17/17

OTHER PUBLICATIONS

Written Opinion and International Search Report issued in PCT/US2018/064368 filed Dec. 7, 2018, dated Mar. 29, 2019.

* cited by examiner

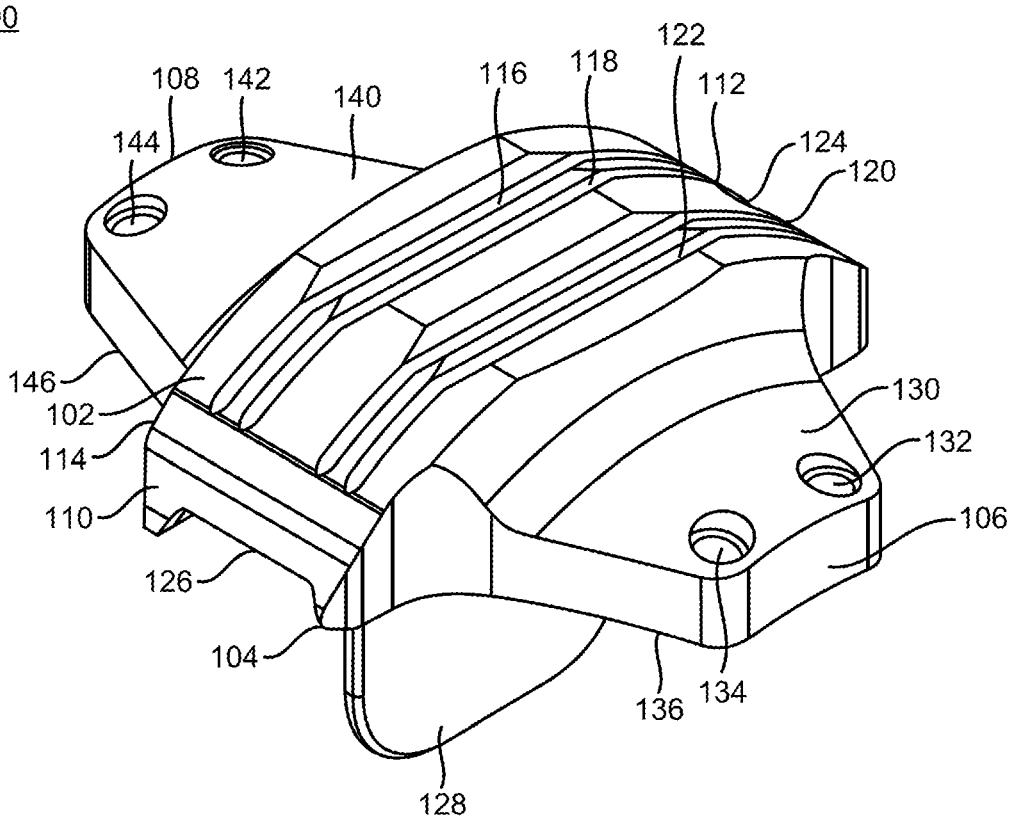
100
108
142
140
116
118
122
112
144
124
120
146
102
114
110
126
104
128
136
134
130
132
106

FIG. 1

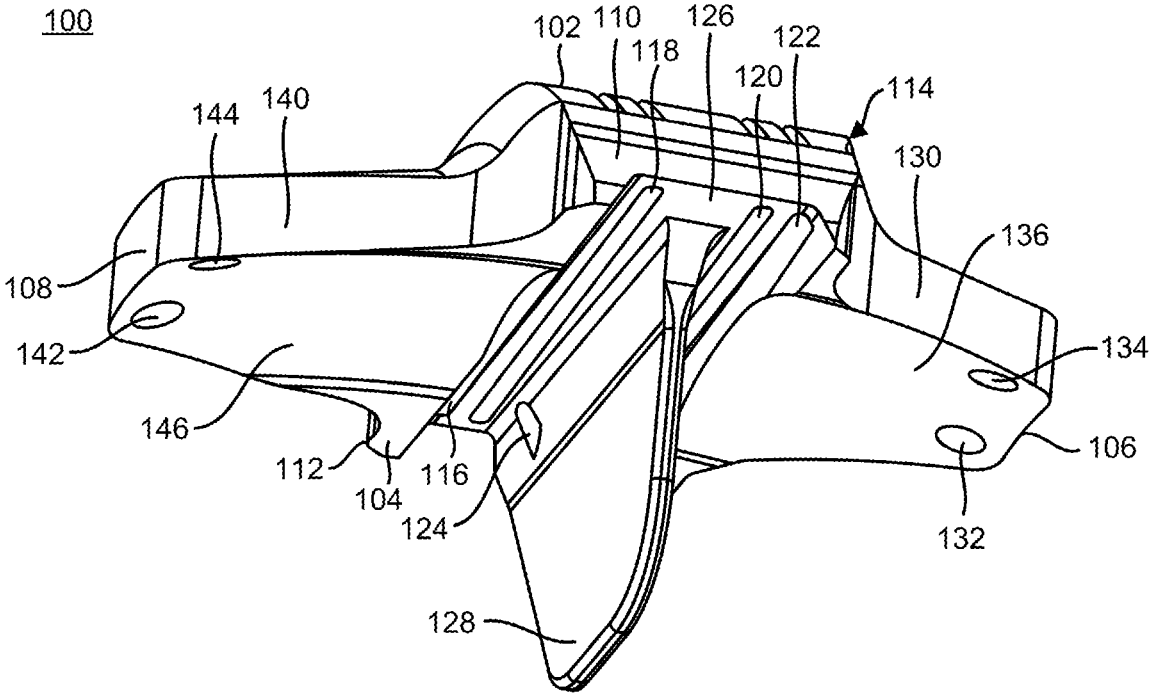
100
102
110
126
118
122
120
114
144
140
130
136
108
142
134
146
106
112
104
116
124
132
128

FIG. 2

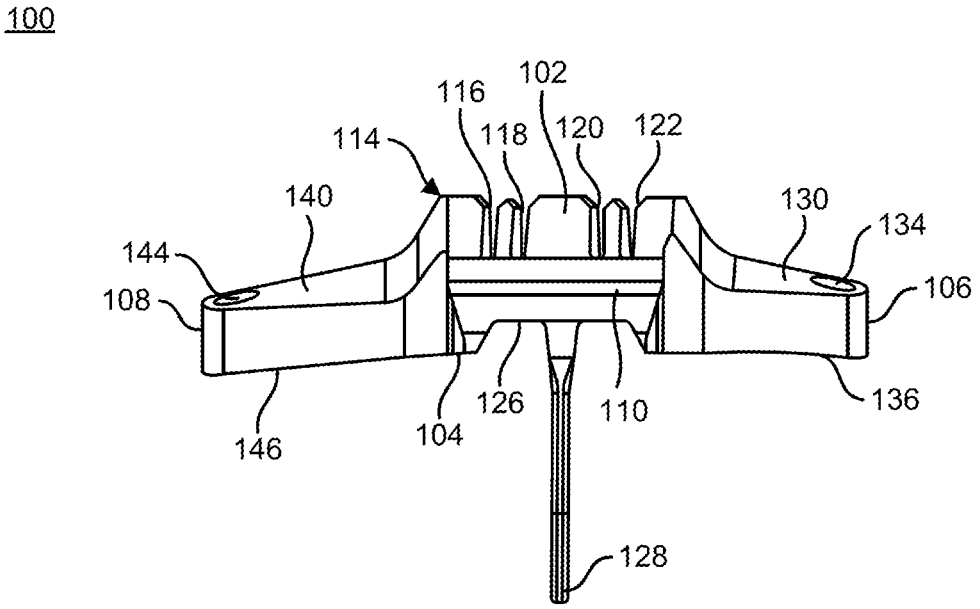
100
102
116
114
118
120
122
140
130
134
144
108
106
126
110
136
146
104
128

FIG. 3

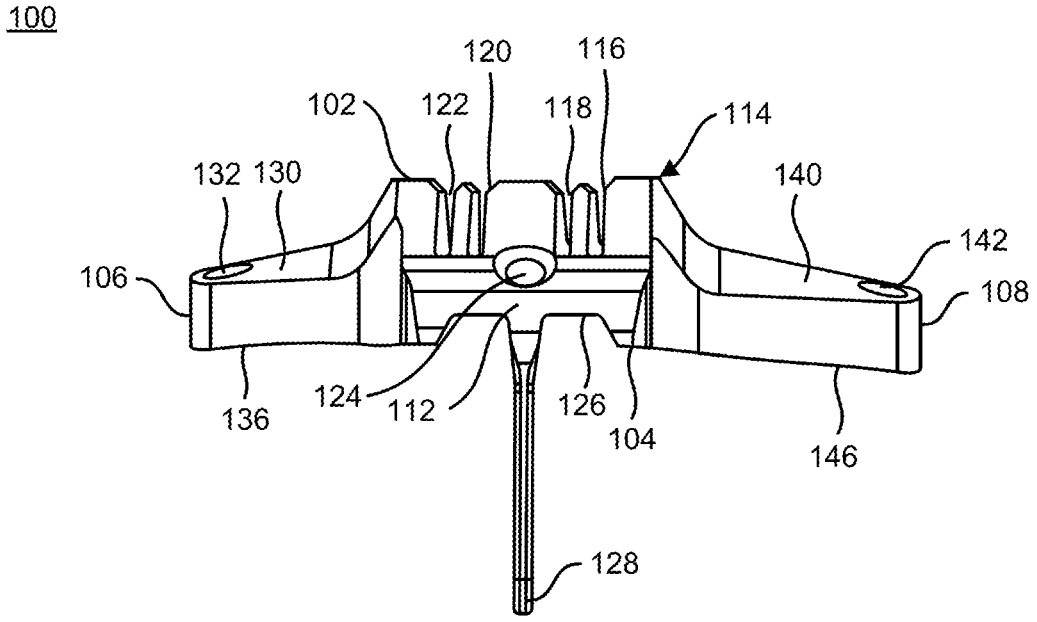
100
120
116
102
122
118
114
132
130
140
142
106
108
124
112
126
104
136
146
128

FIG. 4

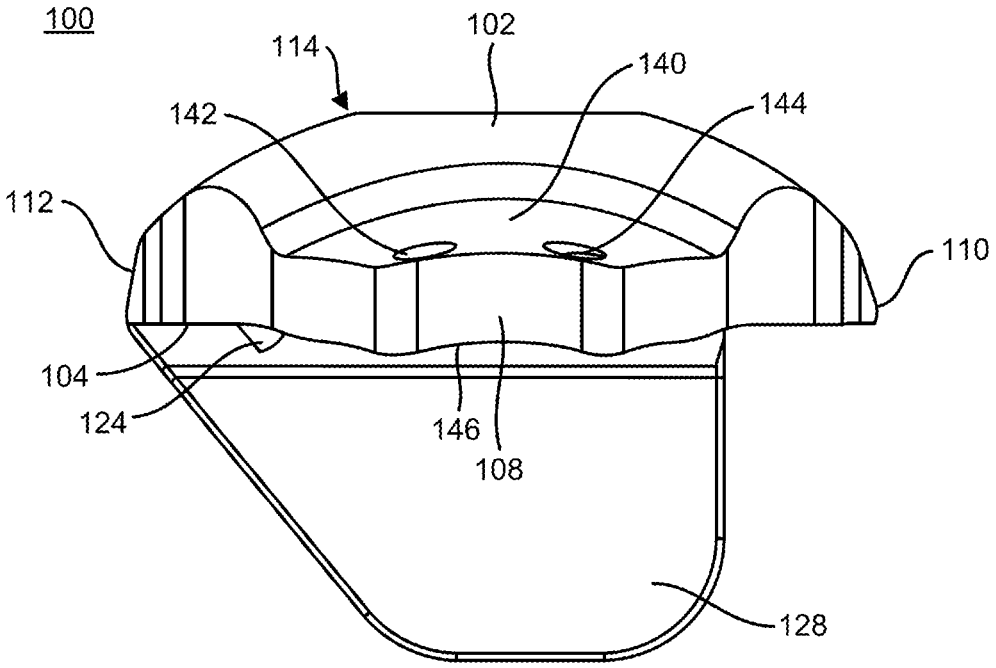
100
114
102
140
142
144
112
110
104
124
146
108
128

FIG. 5

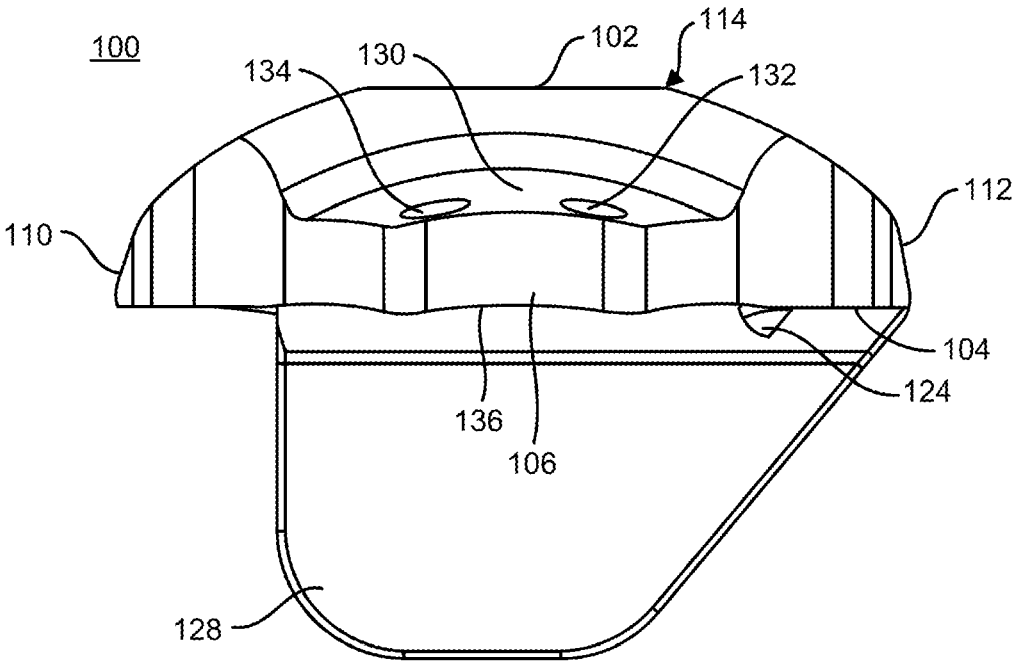
100
114
102
134
130
132
112
110
104
124
136
106
128

FIG. 6

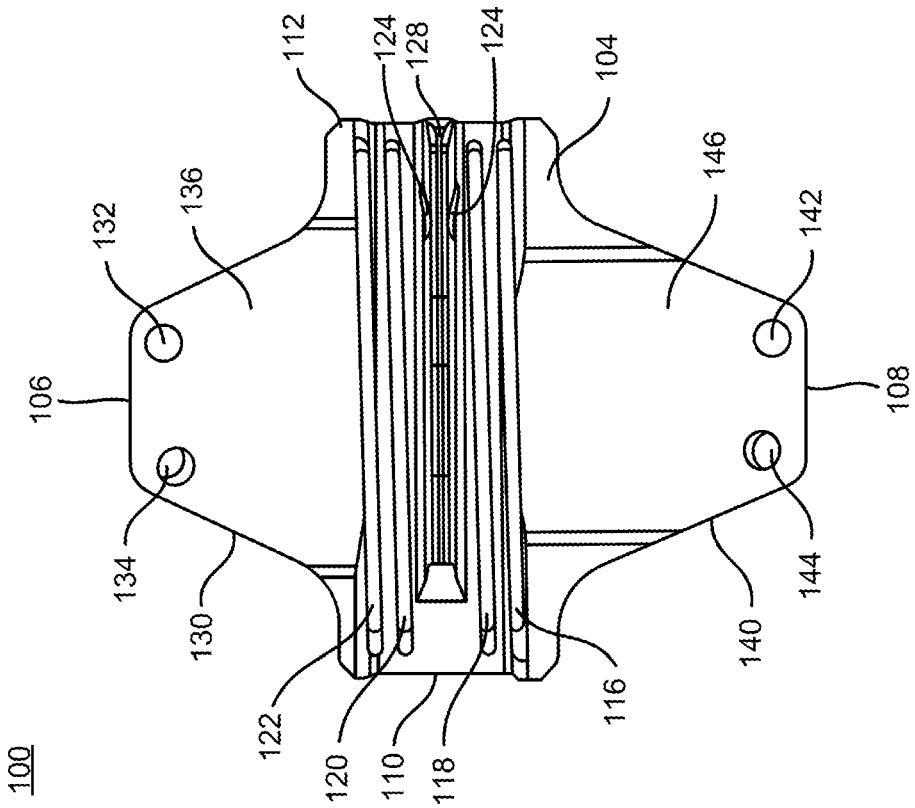
100
112
124
128
124
104
146
142
136
132
106
108
134
130
144
140
122
120
110
118
116

FIG. 8

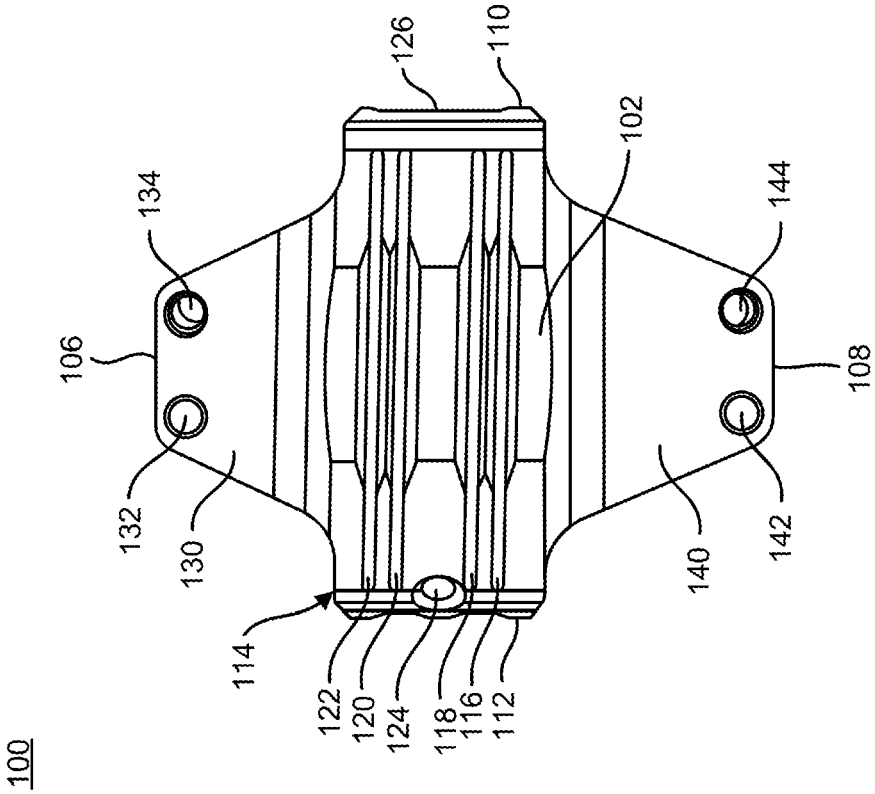
100
126
110
102
134
144
106
108
132
130
142
140
114
122
120
124
118
116
112

FIG. 7

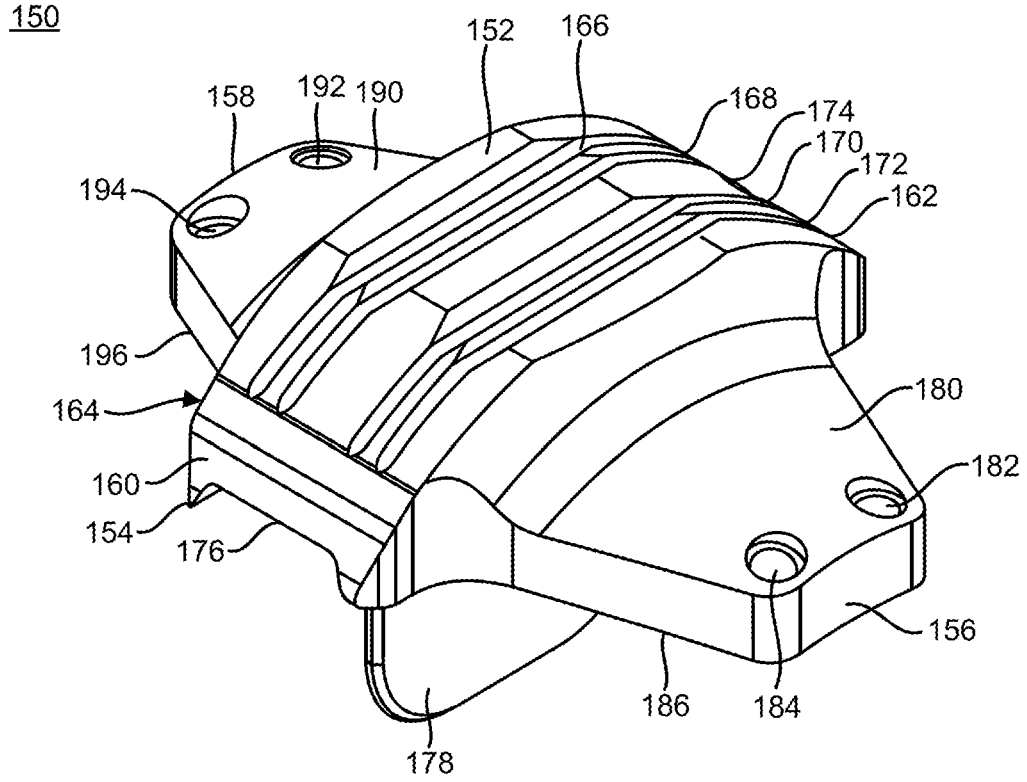
150
152
166
158
192
190
168
174
170
172
162
194
196
164
180
160
182
154
176
156
186
184
178

FIG. 9

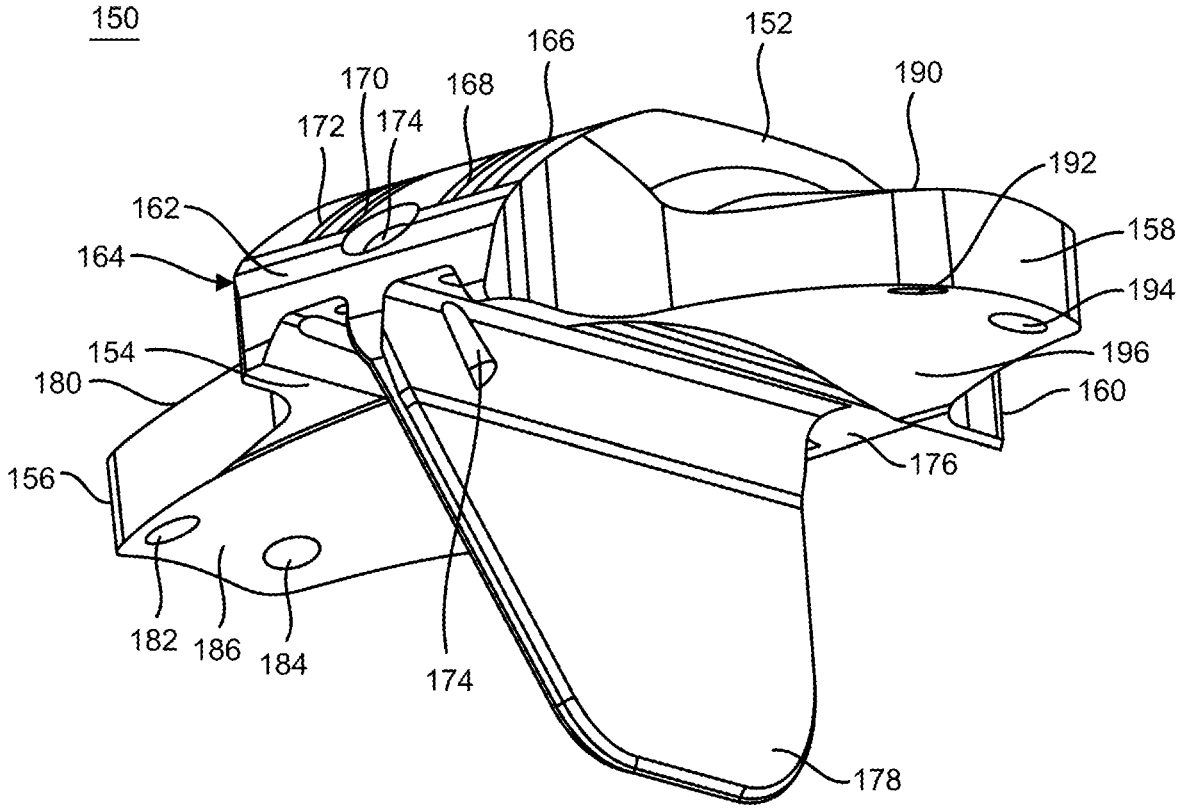
150
166
152
170
168
190
172
174
192
162
158
164
194
154
196
180
160
176
156
182
186
184
174
178

FIG. 10

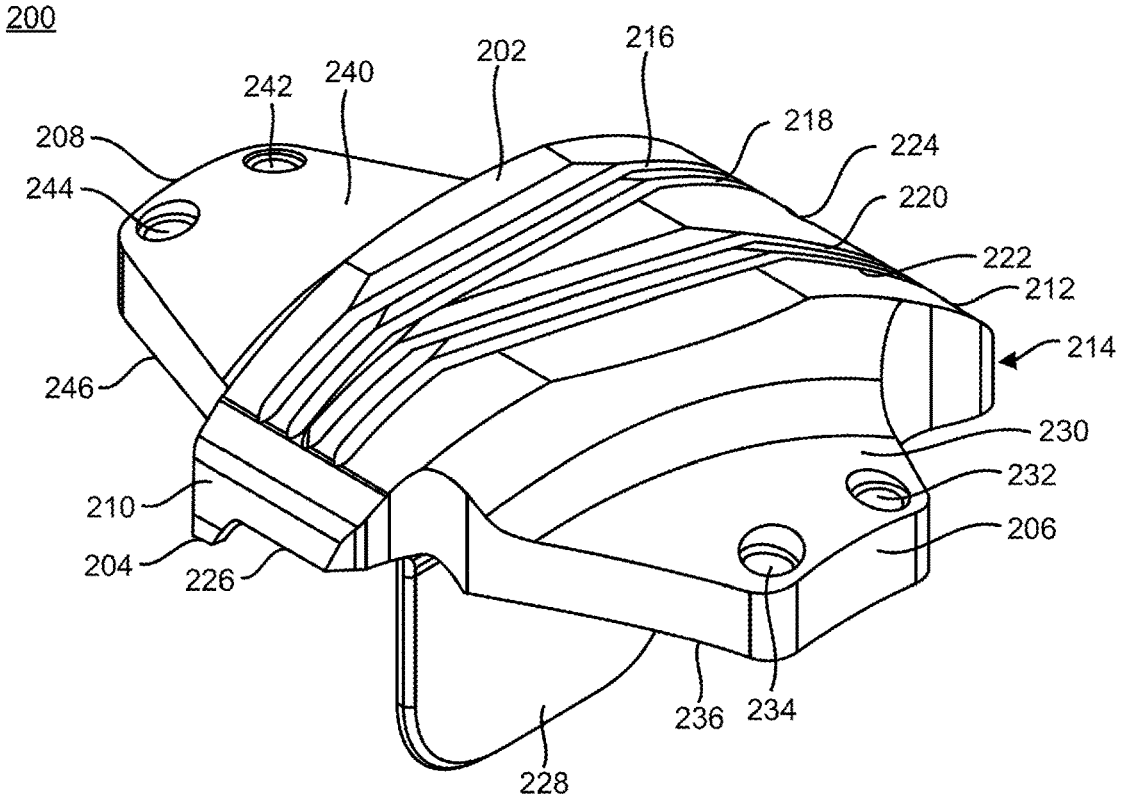
200
242
240
202
216
208
218
224
244
220
222
212
214
246
230
232
210
206
204
226
236
234
228

FIG. 11

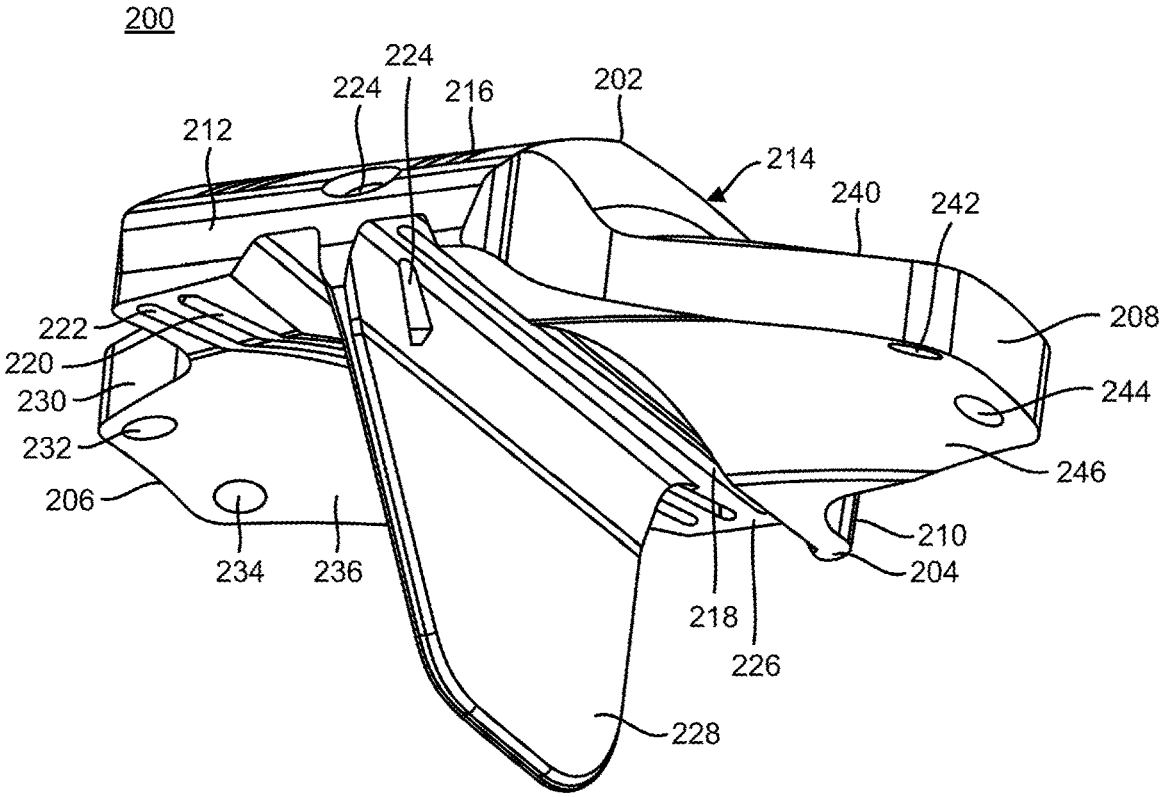
200
224
224
216
202
212
214
240
242
222
208
220
230
244
232
246
206
210
234
236
204
218
226
228

FIG. 12

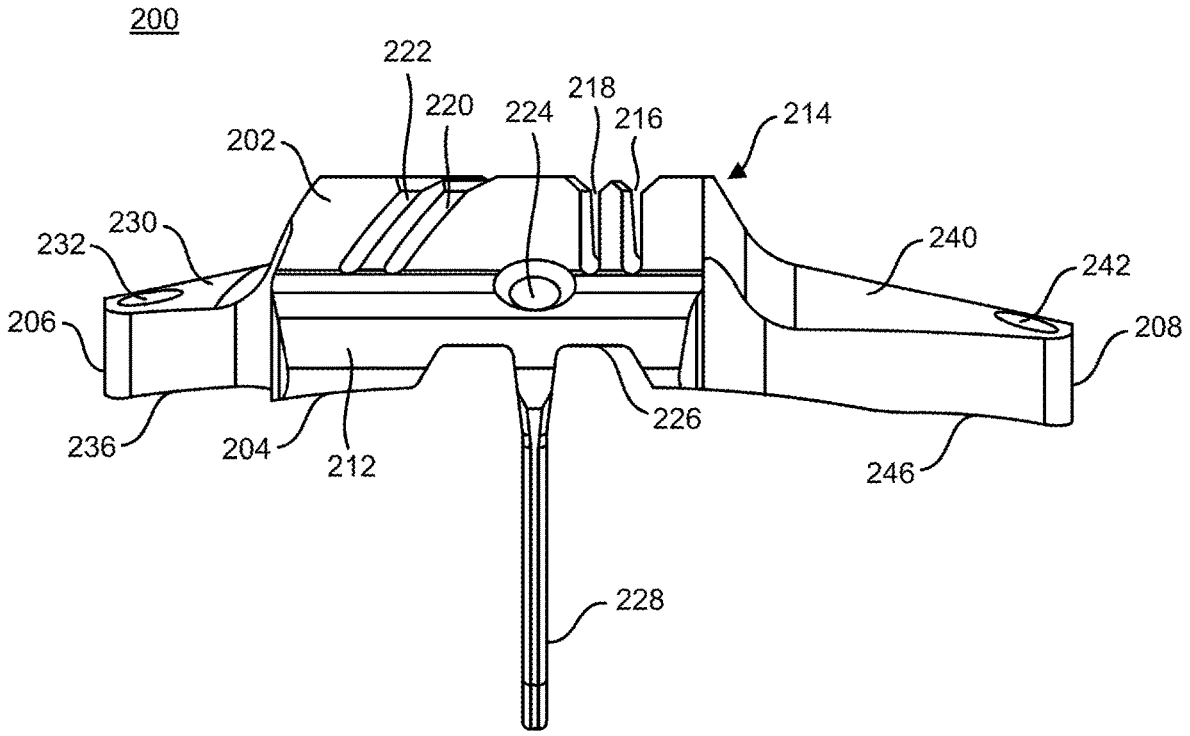
200
222
220
224
218
216
214
202
230
232
240
242
206
208
236
204
212
226
246
228

FIG. 13

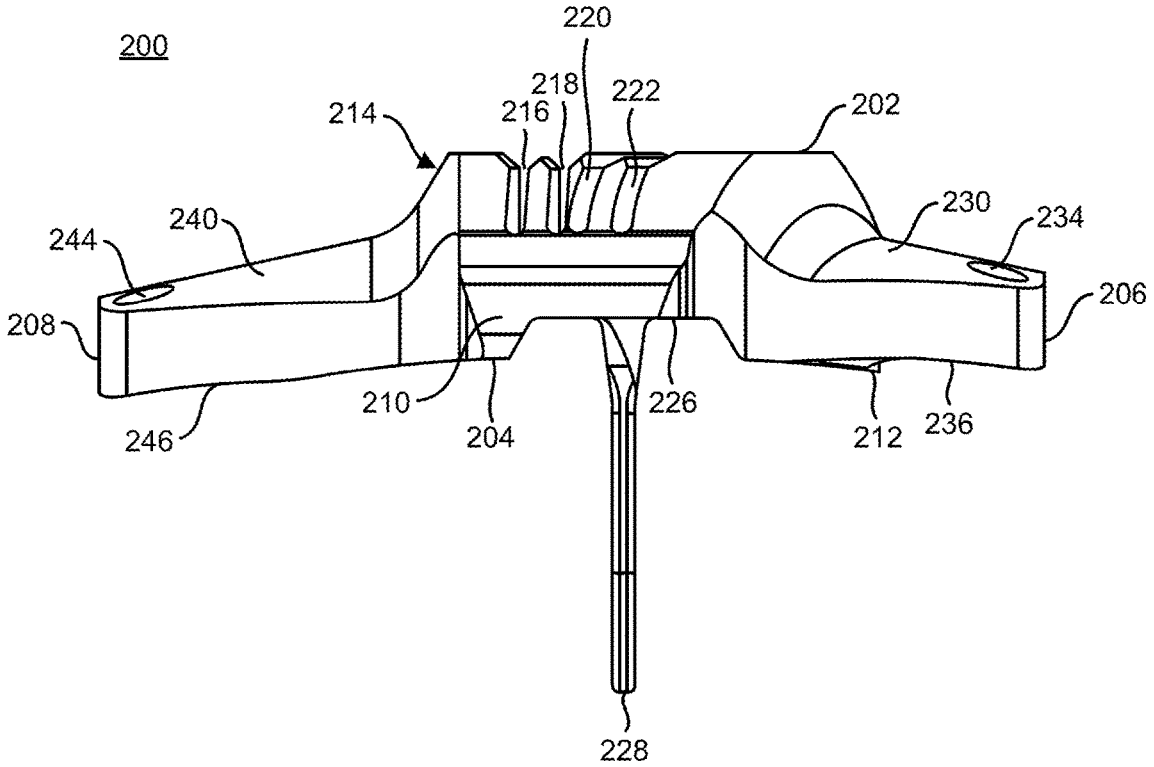
200
220
218
222
216
214
202
230
234
240
244
206
208
210
204
226
212
236
246
228

FIG. 14

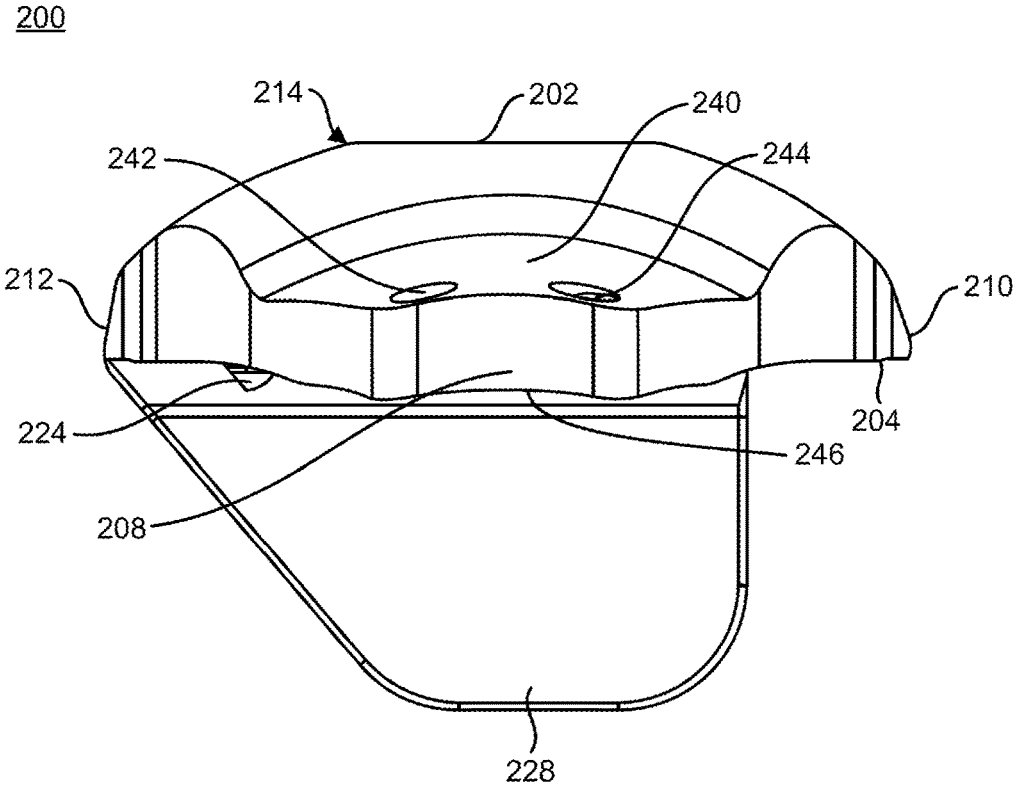
200
214
202
240
242
244
212
210
224
204
246
208
228

FIG. 15

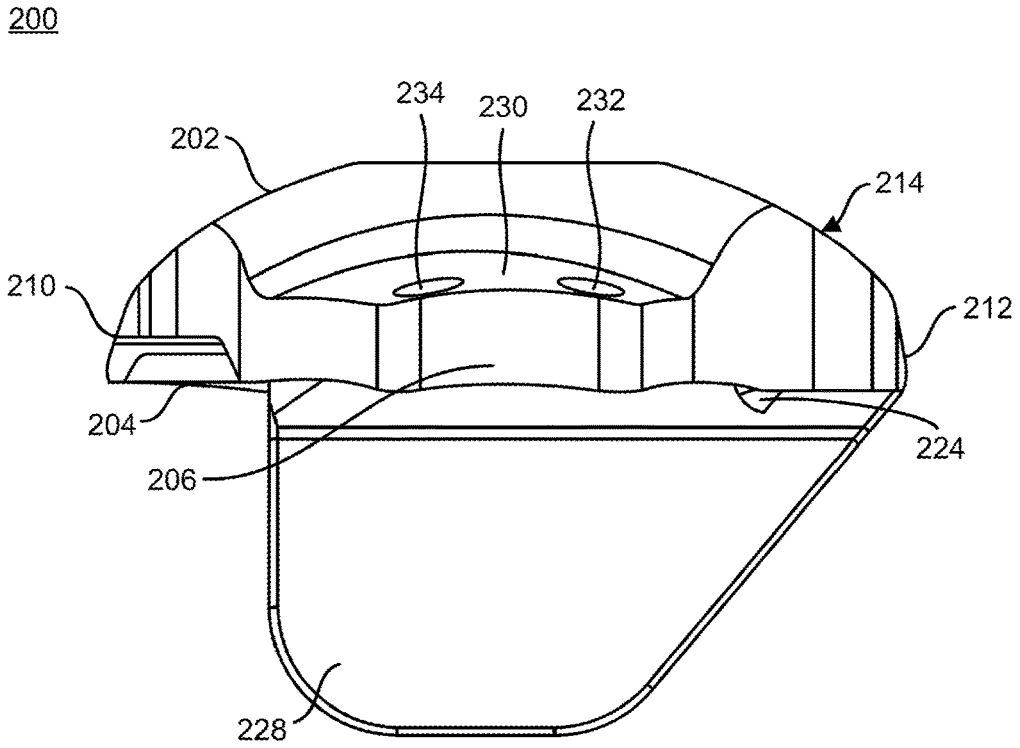
200
234
230
232
202
214
210
212
204
224
206
228

FIG. 16

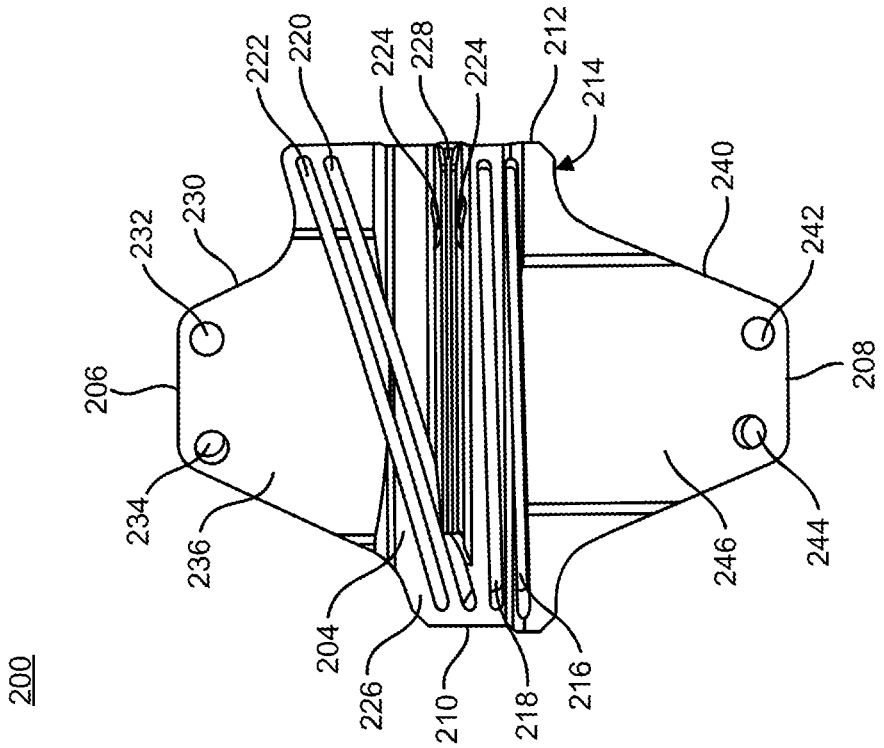
200
206
232
230
222
220
224
228
224
212
214
240
242
208
234
236
204
226
210
218
216
246
244

FIG. 18

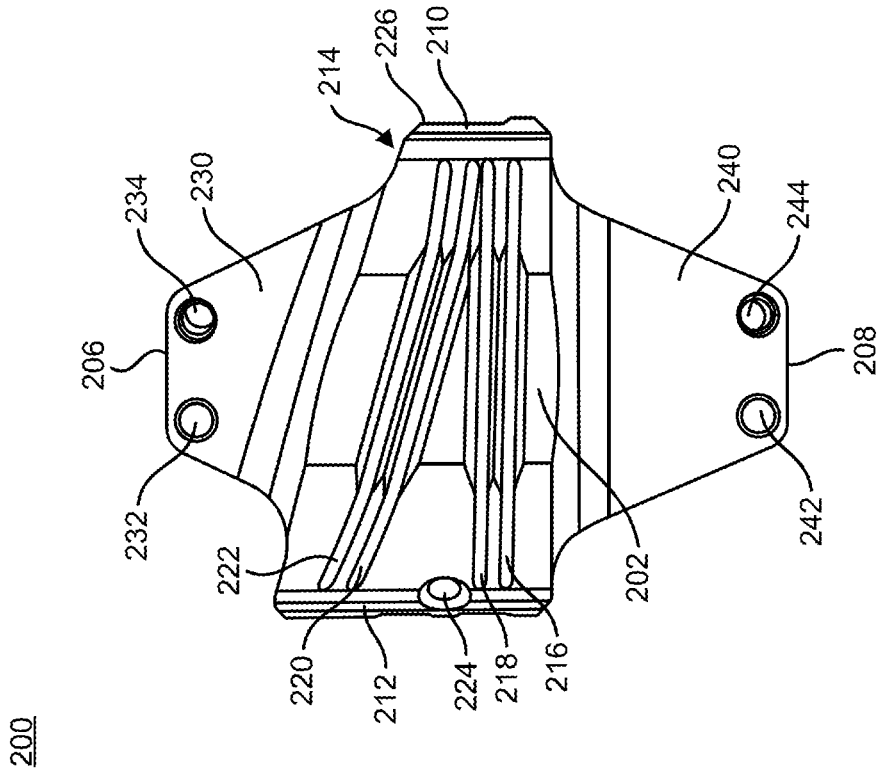
200
206
234
230
214
226
210
240
244
208
232
222
220
212
224
218
216
202
242

FIG. 17

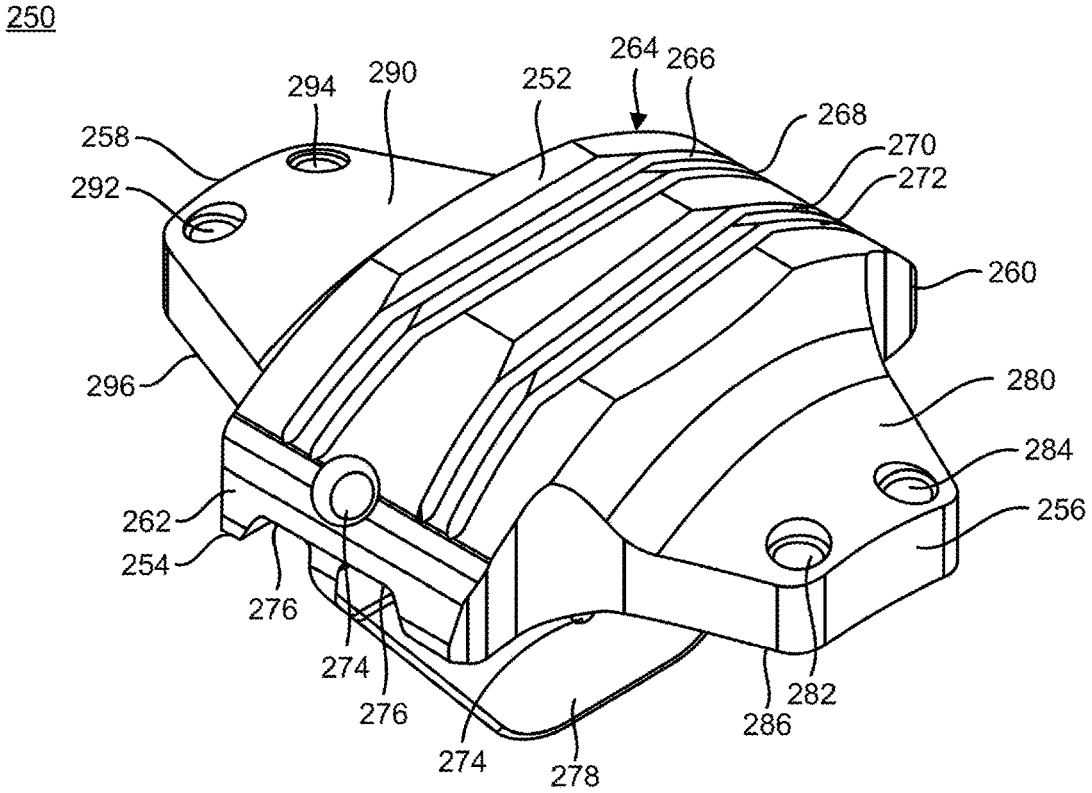
250
294
290
252
264
266
268
258
270
292
272
260
296
280
284
262
256
254
276
274
276
282
286
274
278

FIG. 19

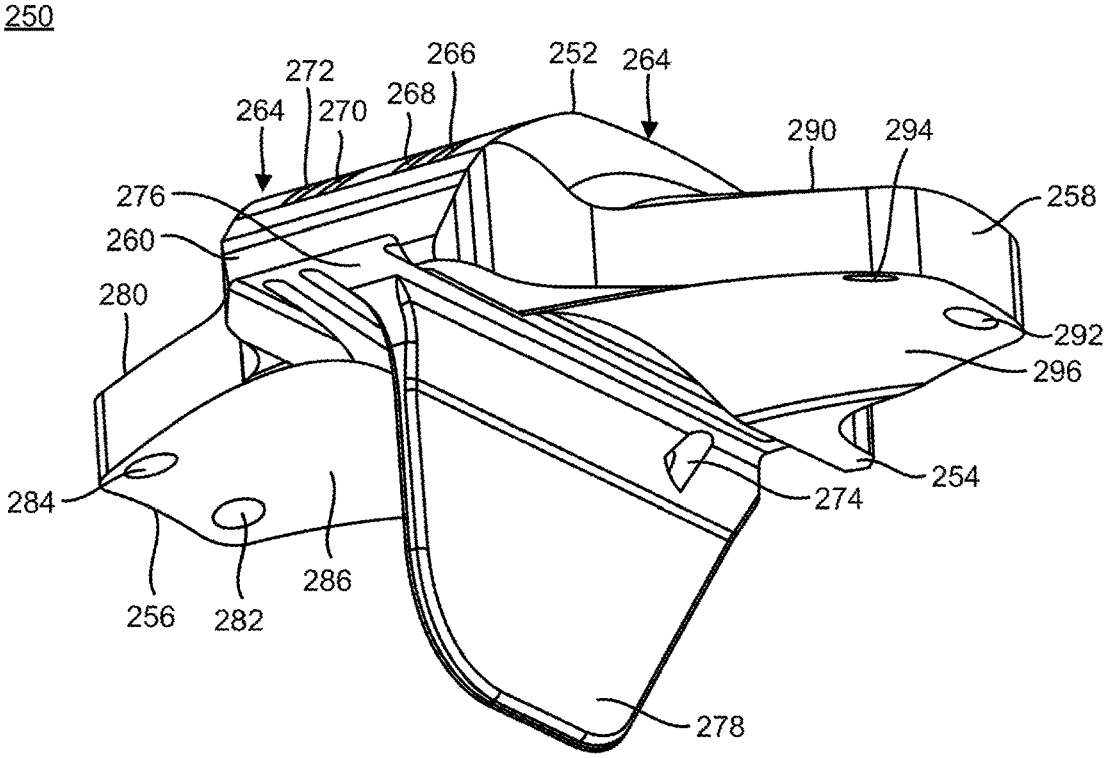
250
272
266
252
264
264
270
268
290
294
276
258
260
280
292
296
284
254
274
286
256
282
278

FIG. 20

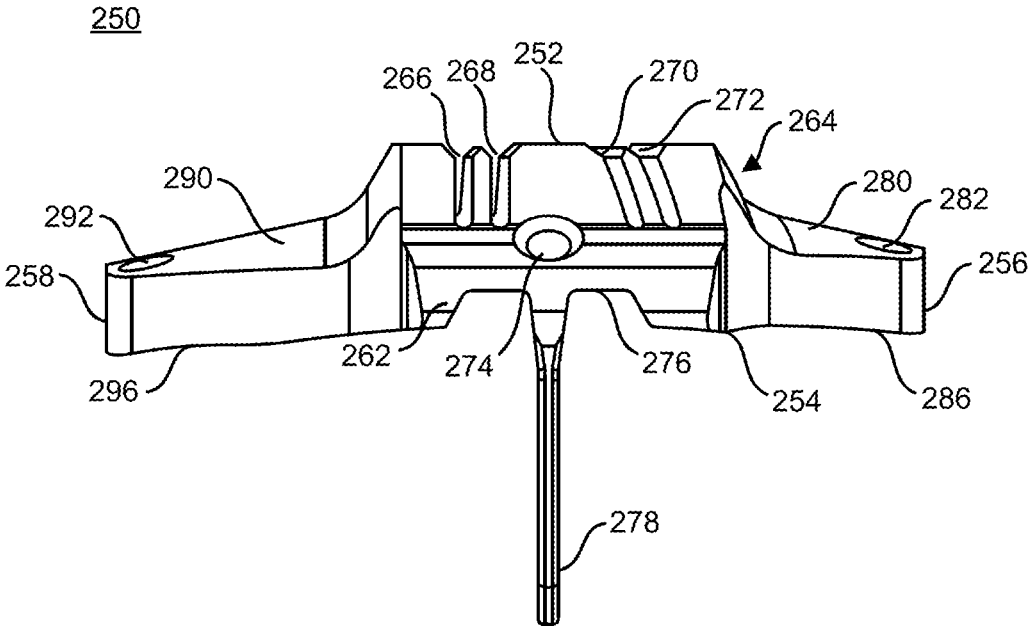
250
266
268
252
270
272
264
290
280
282
292
258
256
262
274
276
296
254
286
278

FIG. 21

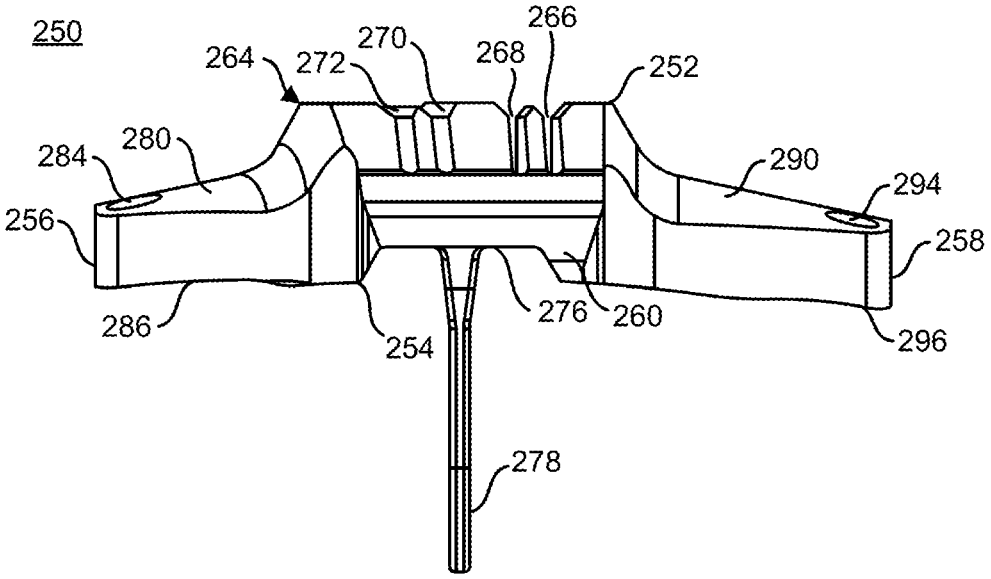
250
266
264
272
270
268
252
284
280
290
294
256
258
286
254
276
260
296
278

FIG. 22

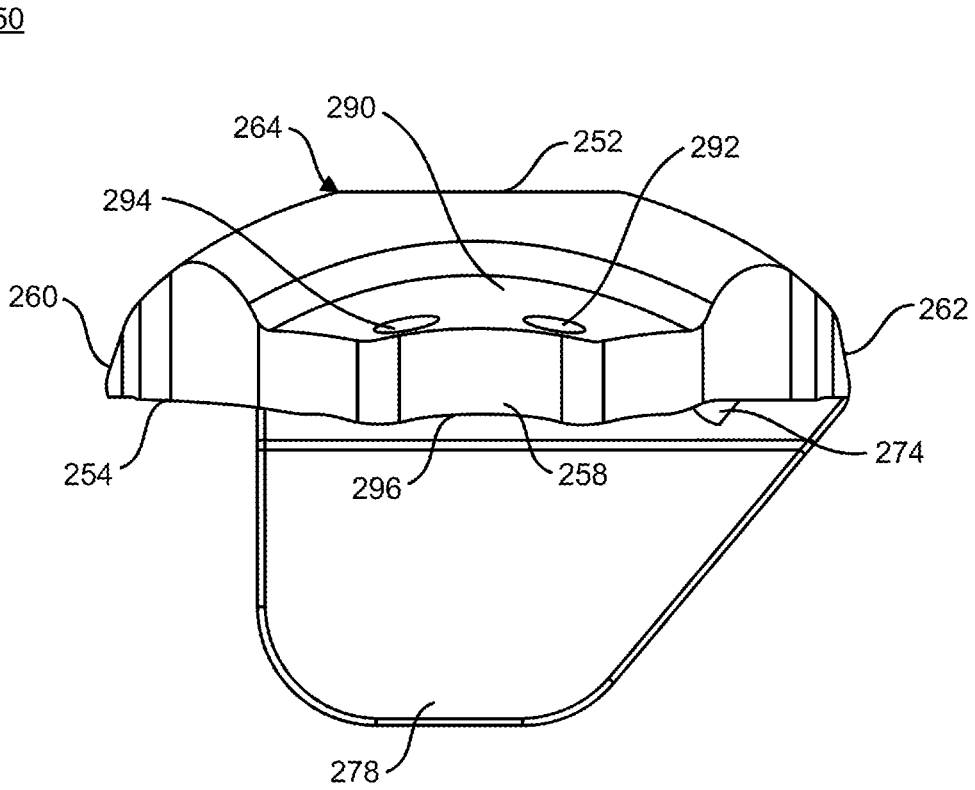
250
264
290
252
292
294
260
262
254
296
258
274
278

FIG. 23

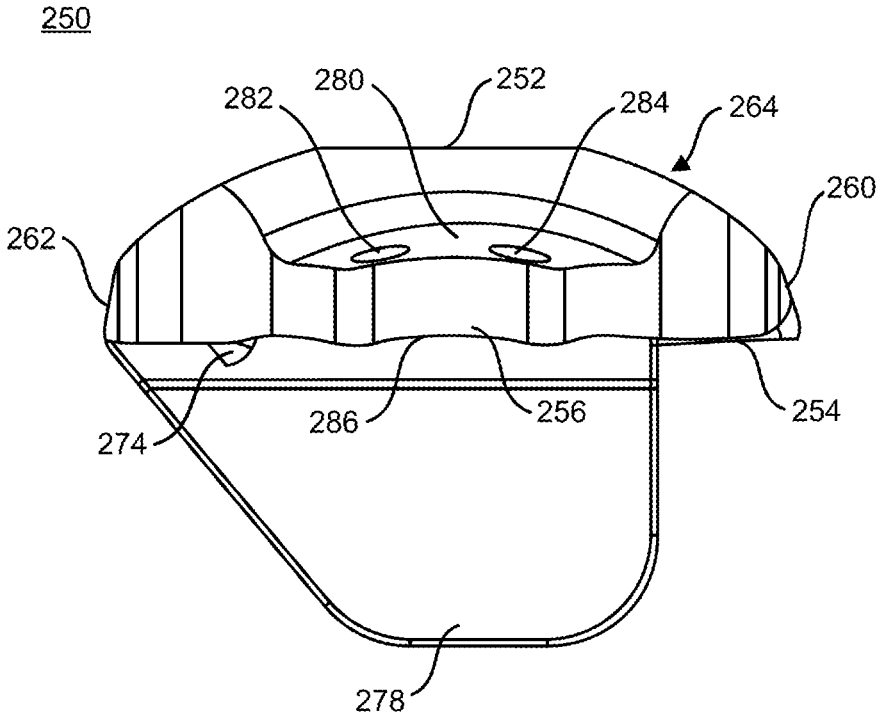
250
282
280
252
284
264
260
262
274
286
256
254
278

FIG. 24

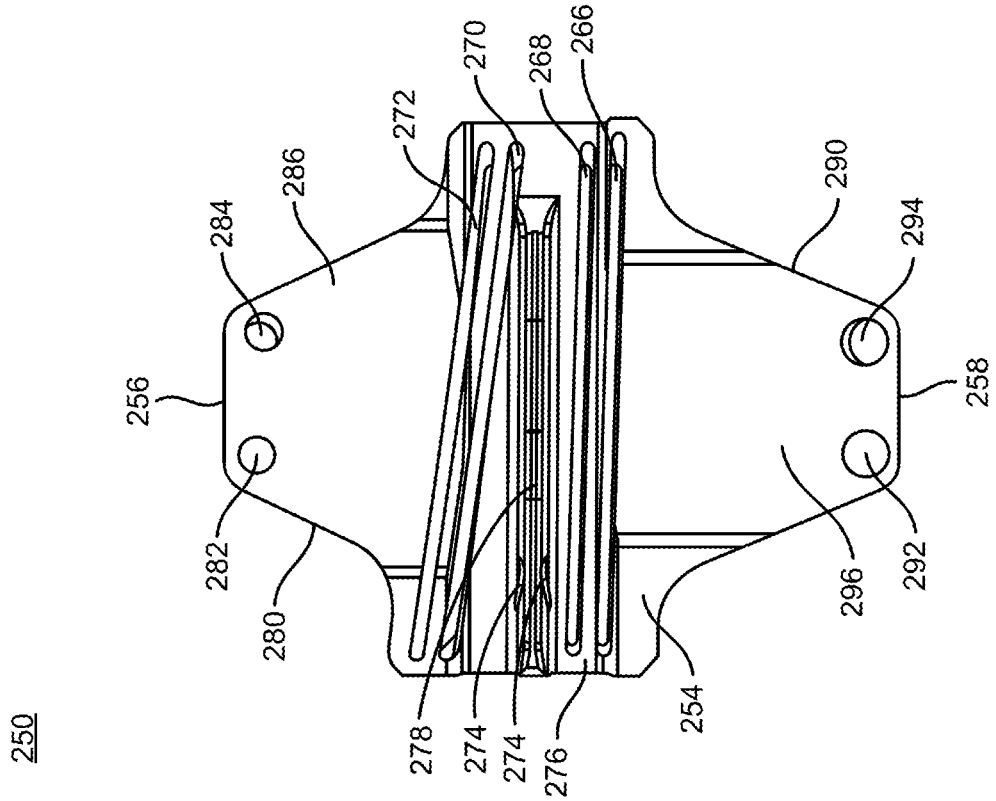
250
256
284
286
272
270
268
266
290
294
258
282
280
278
274
274
276
254
296
292

FIG. 26

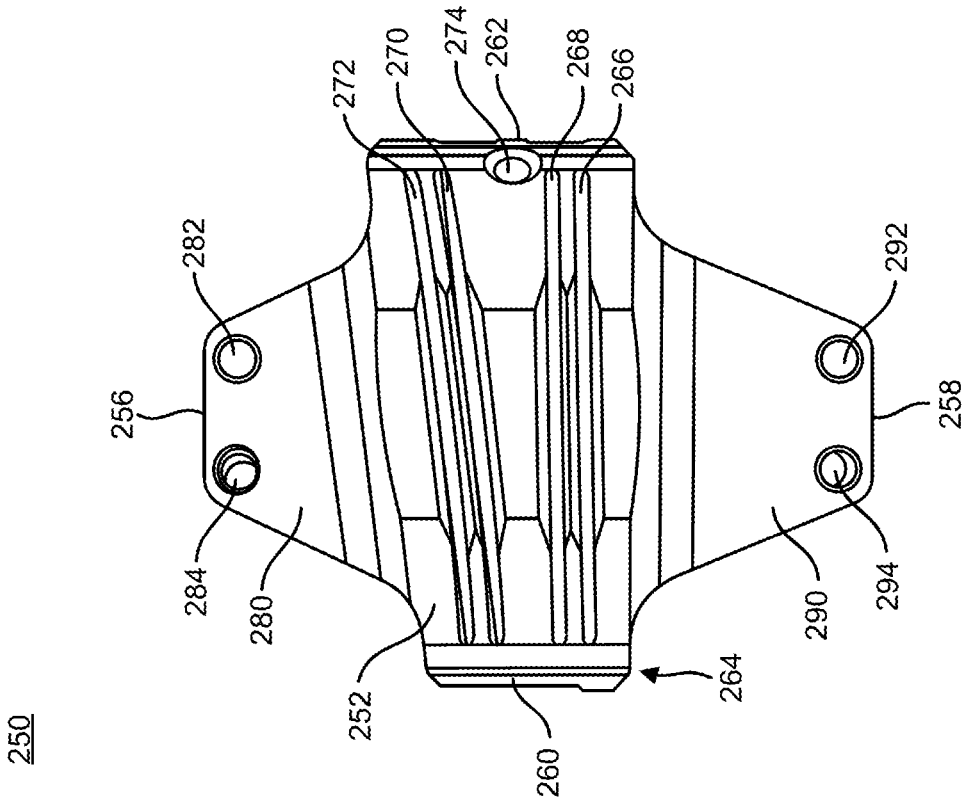
250
256
282
284
280
272
270
274
262
268
266
292
258
294
290
252
260
264

FIG. 25

300

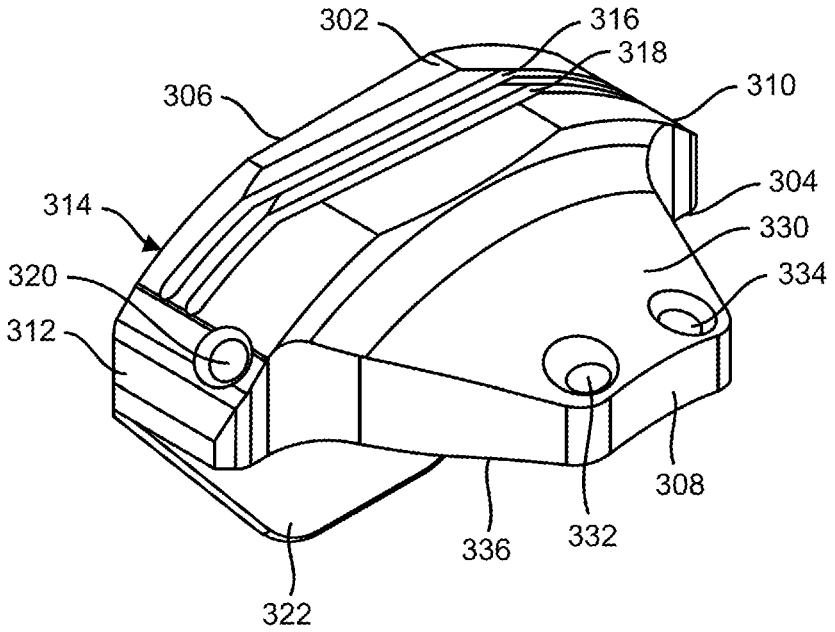

FIG. 27

300

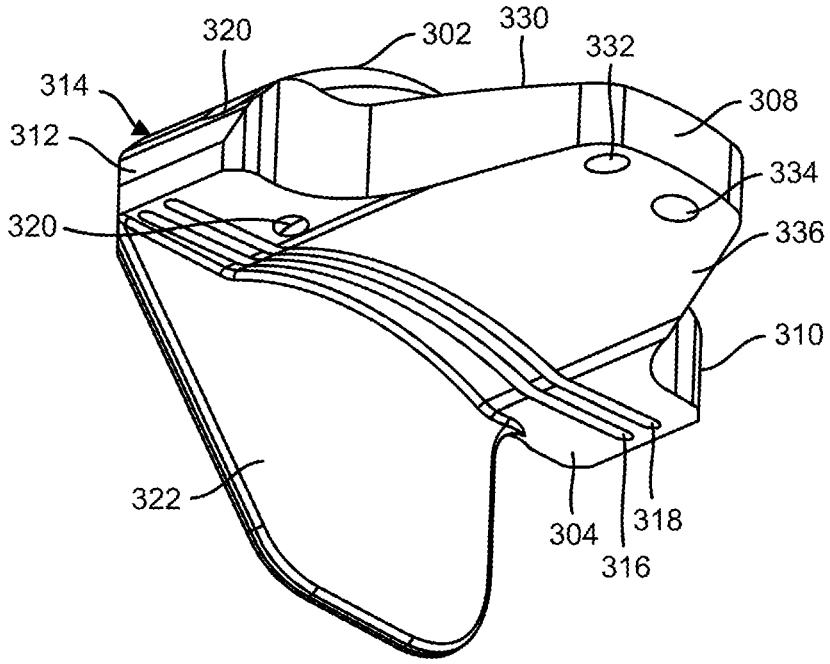

FIG. 28

300

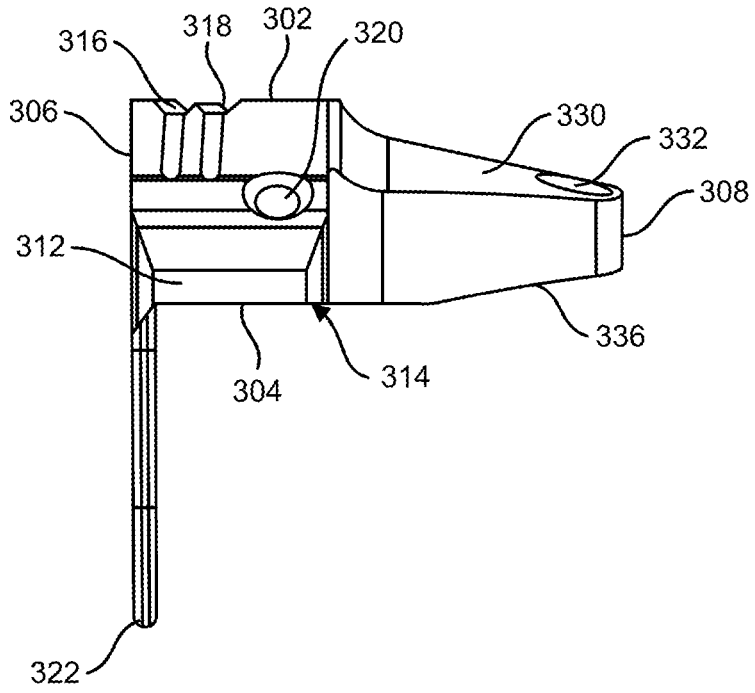

FIG. 29

300

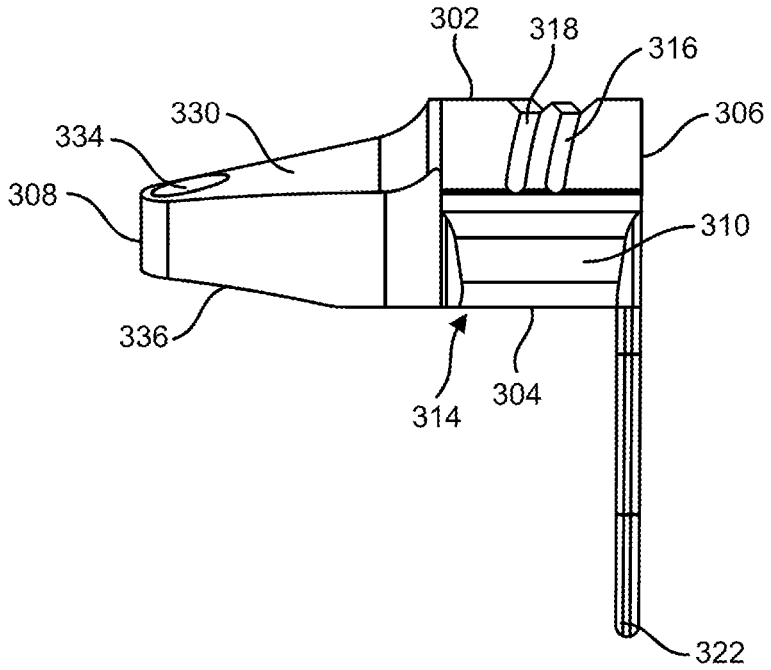

FIG. 30

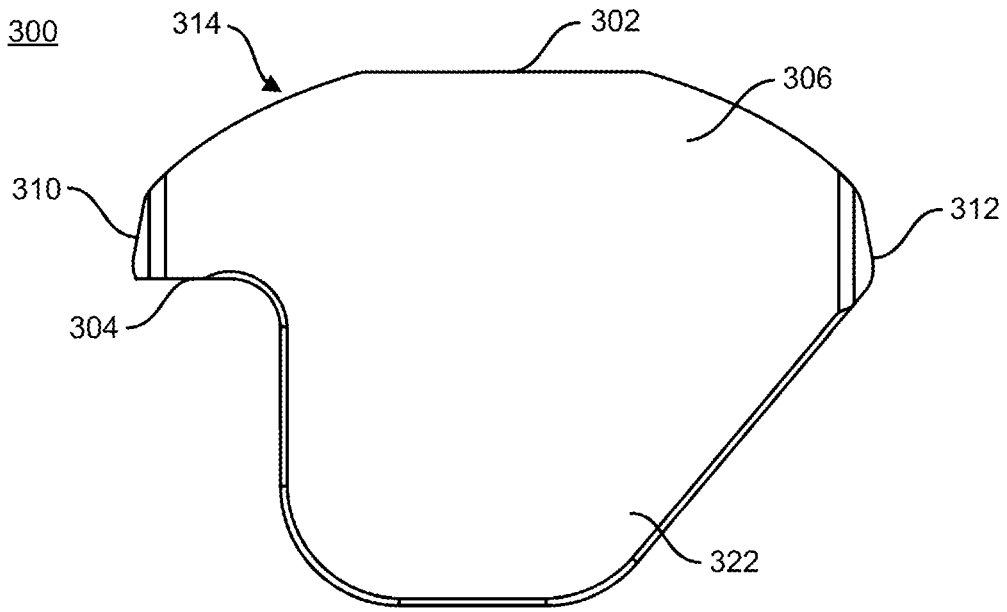
300
314
302
306
310
312
304
322

FIG. 31

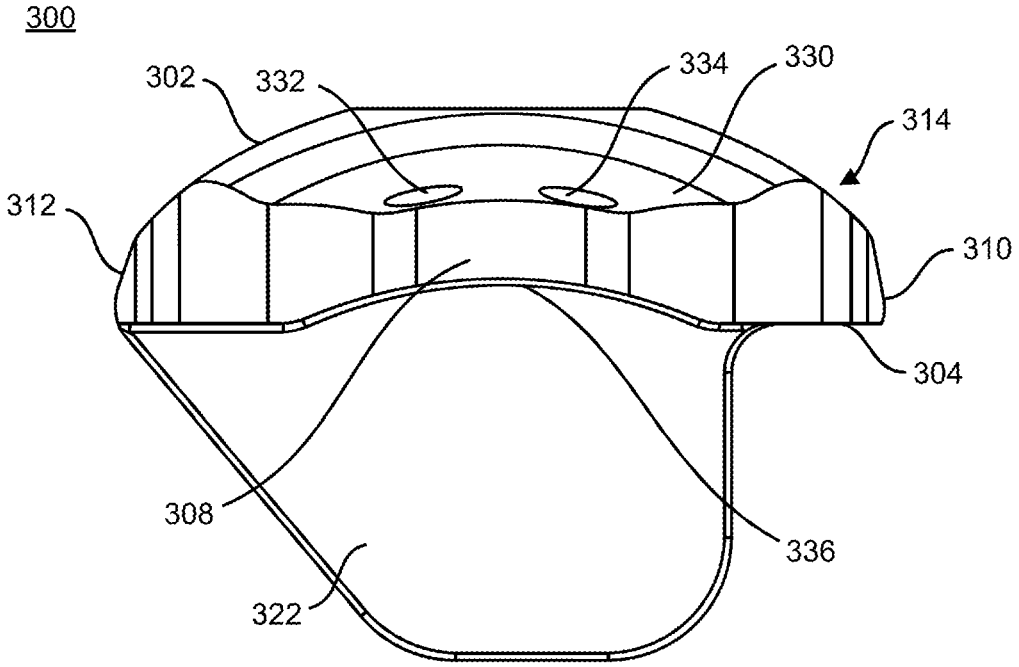
300
302
332
334
330
314
312
310
304
308
336
322

FIG. 32

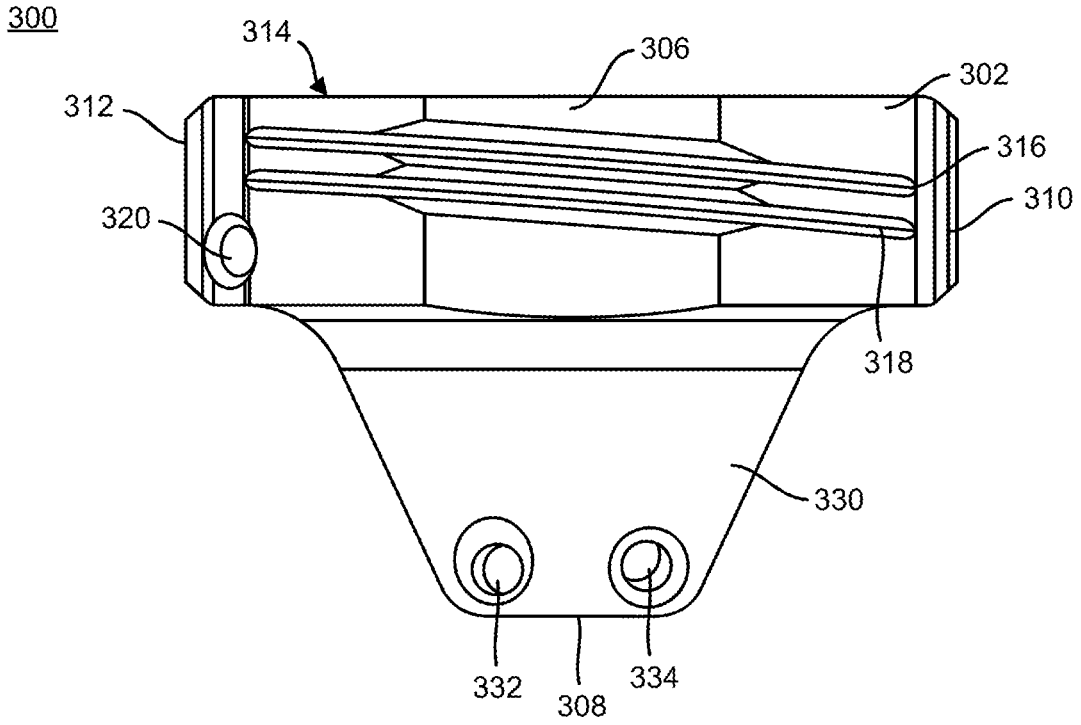
300
314
306
302
312
316
310
320
318
330
332
308
334

FIG. 33

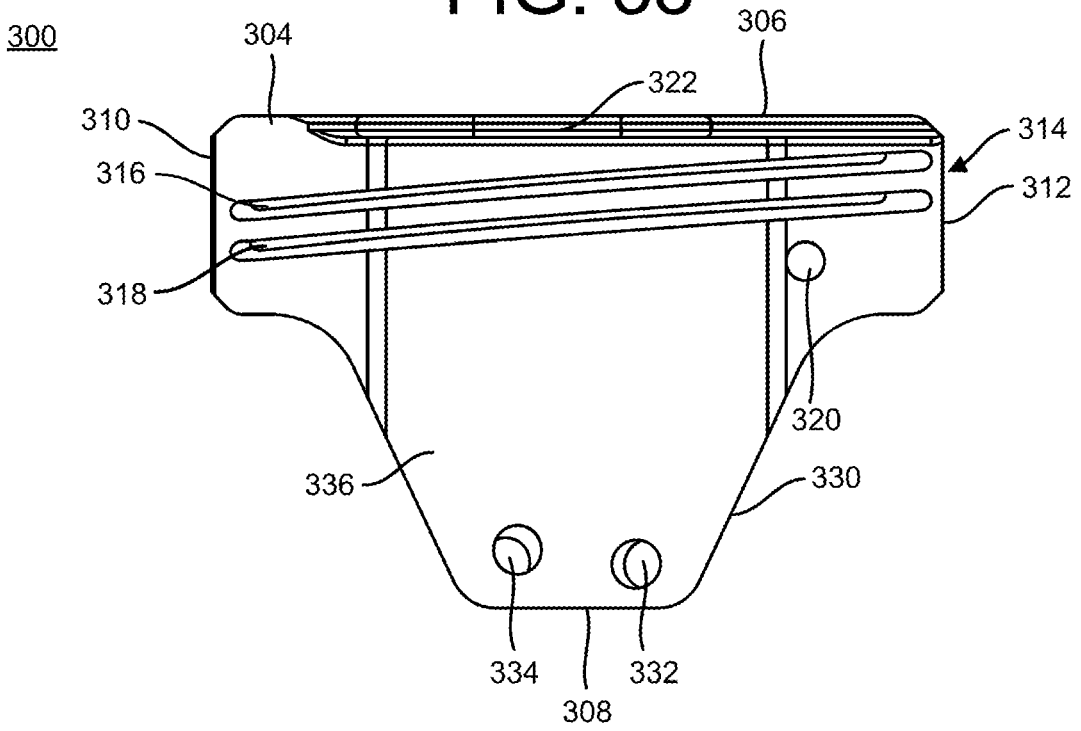
300
304
306
322
310
314
316
312
318
320
336
330
334
332
308

FIG. 34

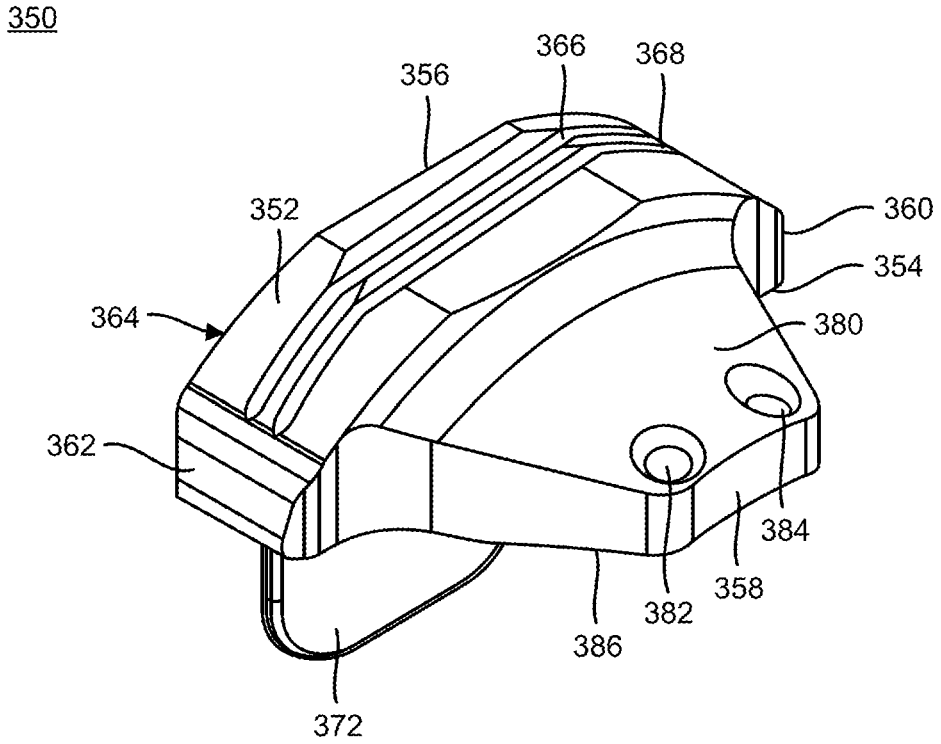
350
356
366
368
352
360
354
364
380
362
384
358
382
386
372

FIG. 35

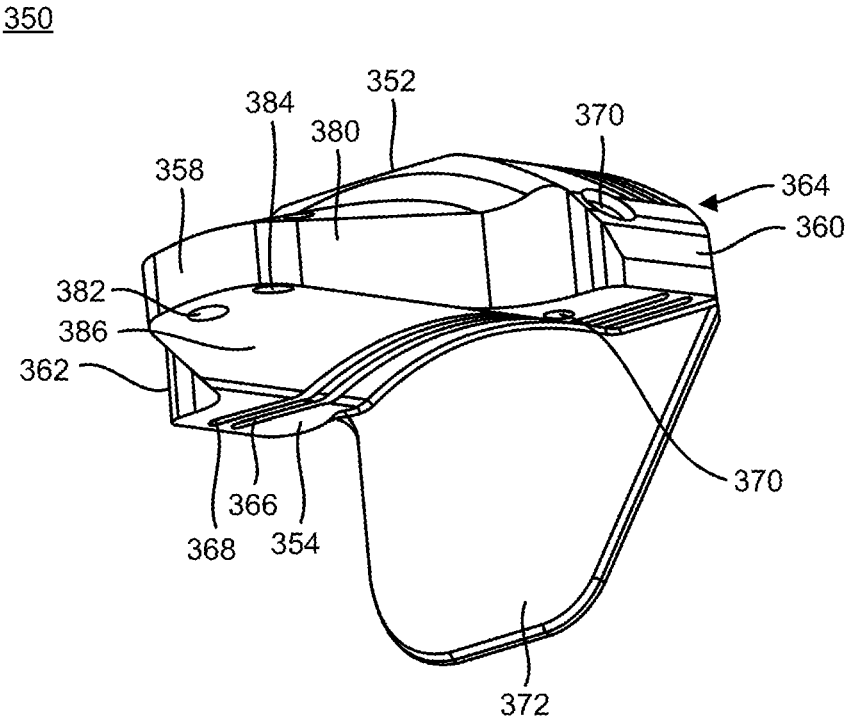
350
384
352
380
370
358
364
360
382
386
362
370
366
368
354
372

FIG. 36

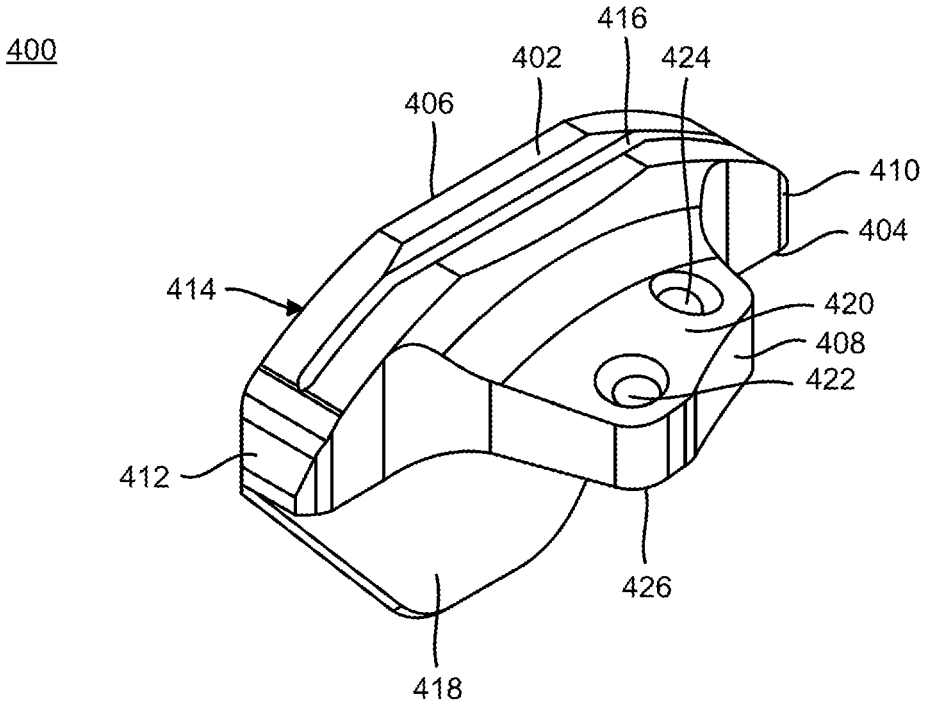
400
416
402
424
406
410
404
414
420
408
422
412
426
418

FIG. 37

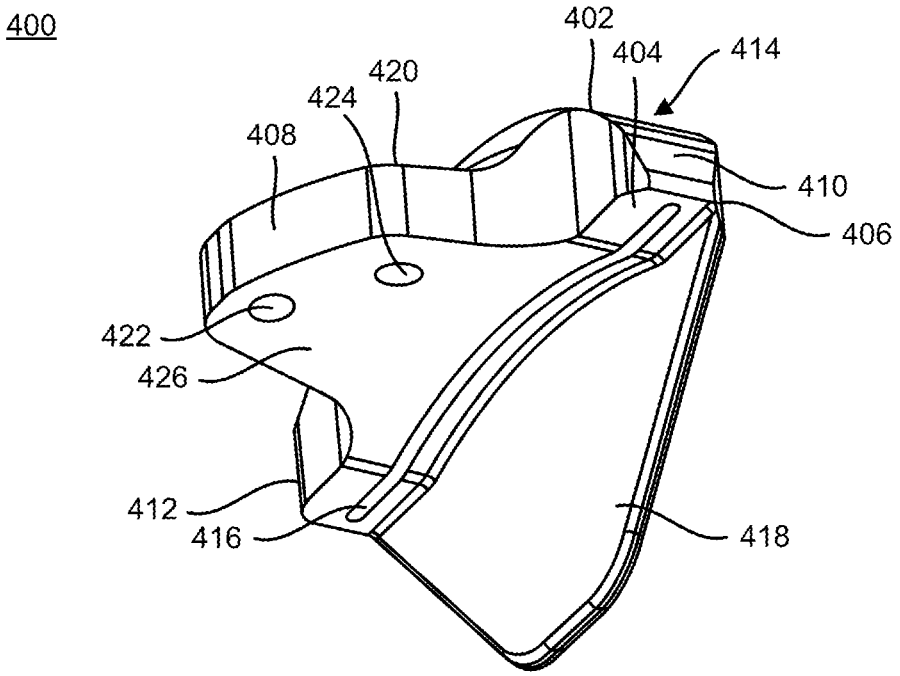
400
402
404
414
420
424
408
410
406
422
426
412
416
418

FIG. 38

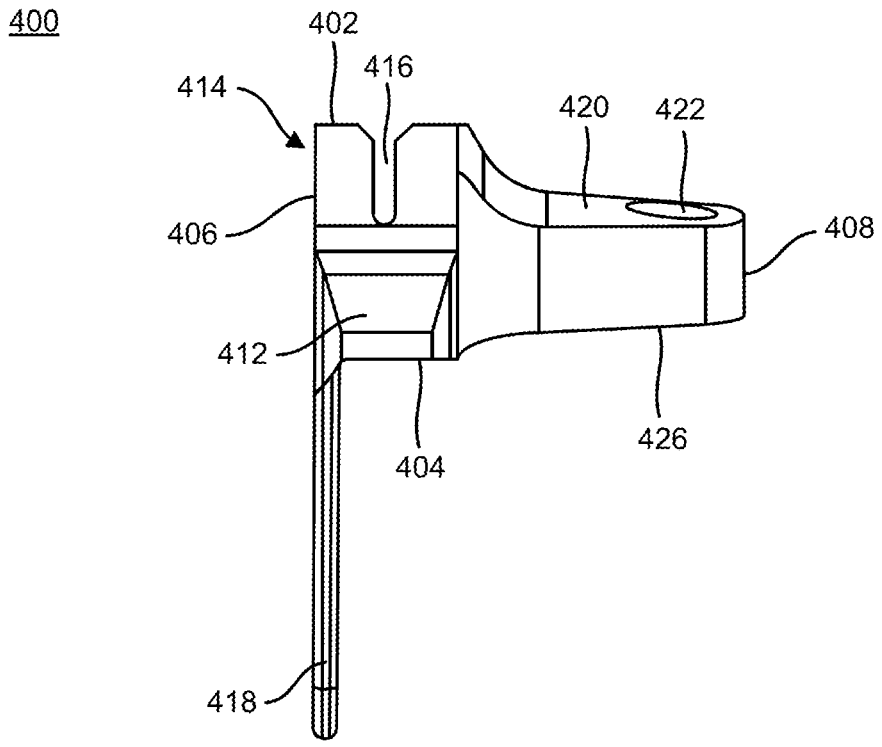
400
402
416
414
420
422
406
408
412
426
404
418

FIG. 39

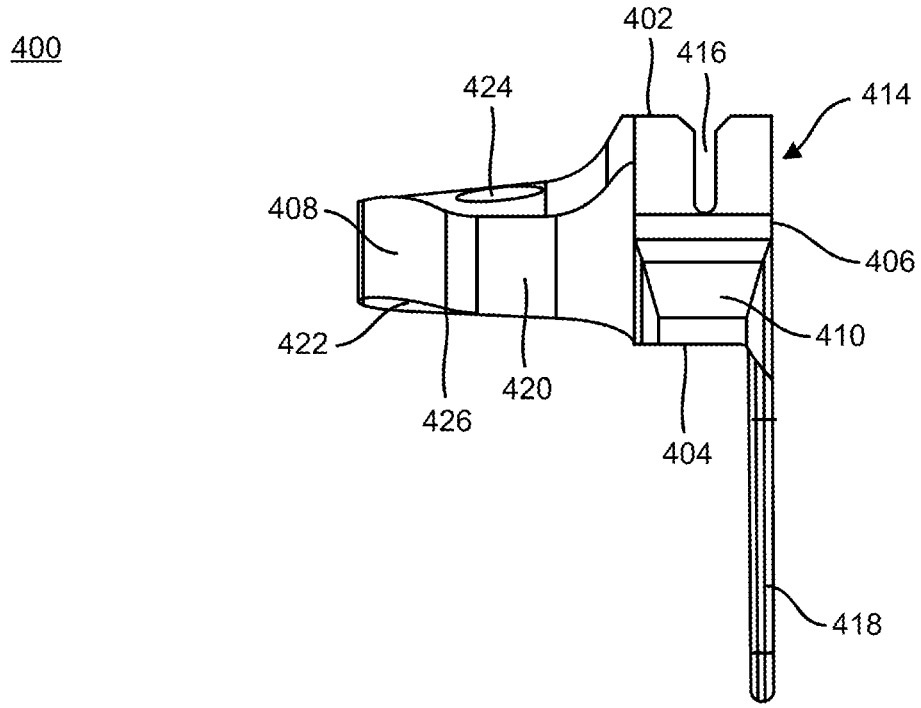
400
402
416
424
414
408
406
422
410
420
426
404
418

FIG. 40

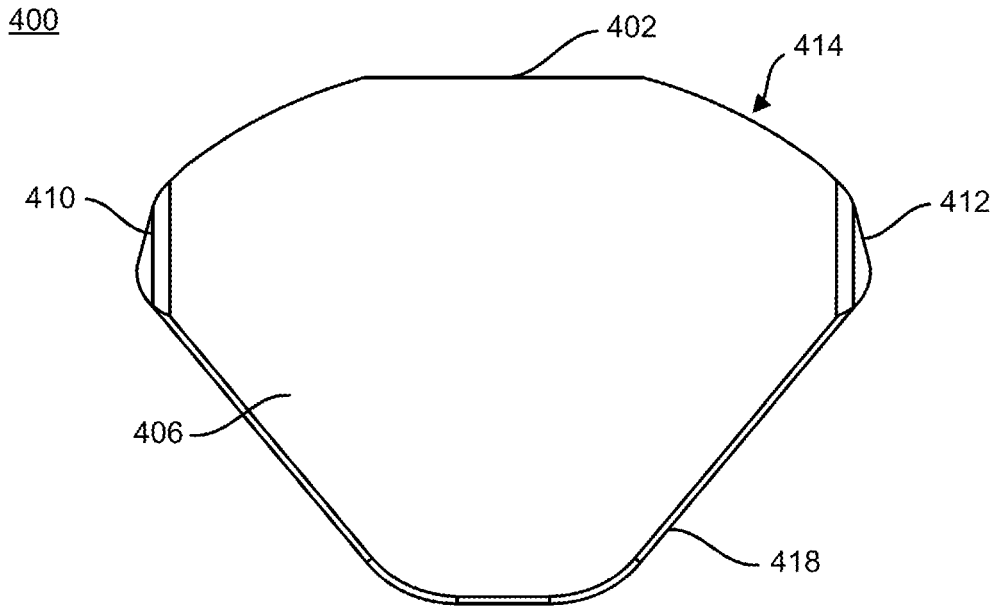
400
402
414
410
412
406
418

FIG. 41

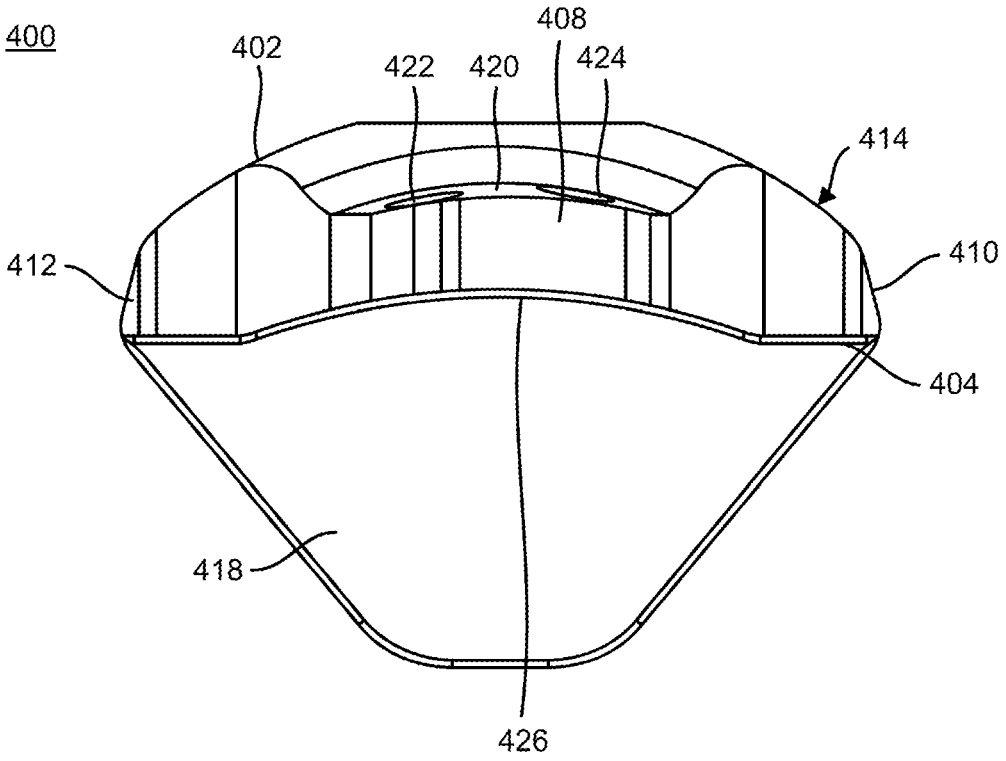
400
402
422
420
408
424
414
412
410
404
418
426

FIG. 42

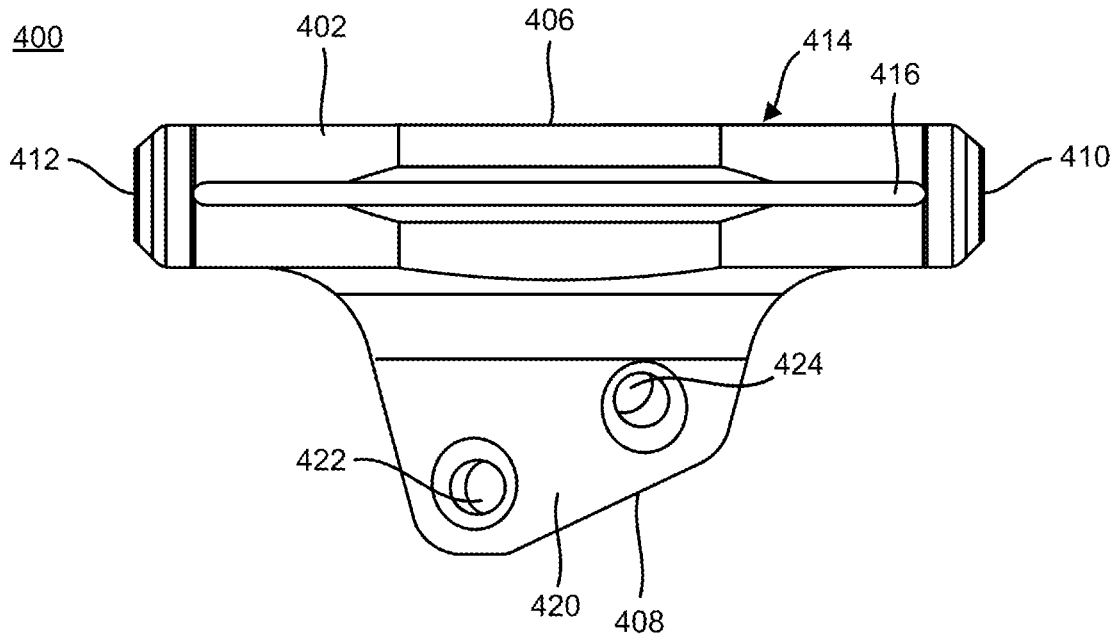
400
402
406
414
416
412
410
424
422
420
408

FIG. 43

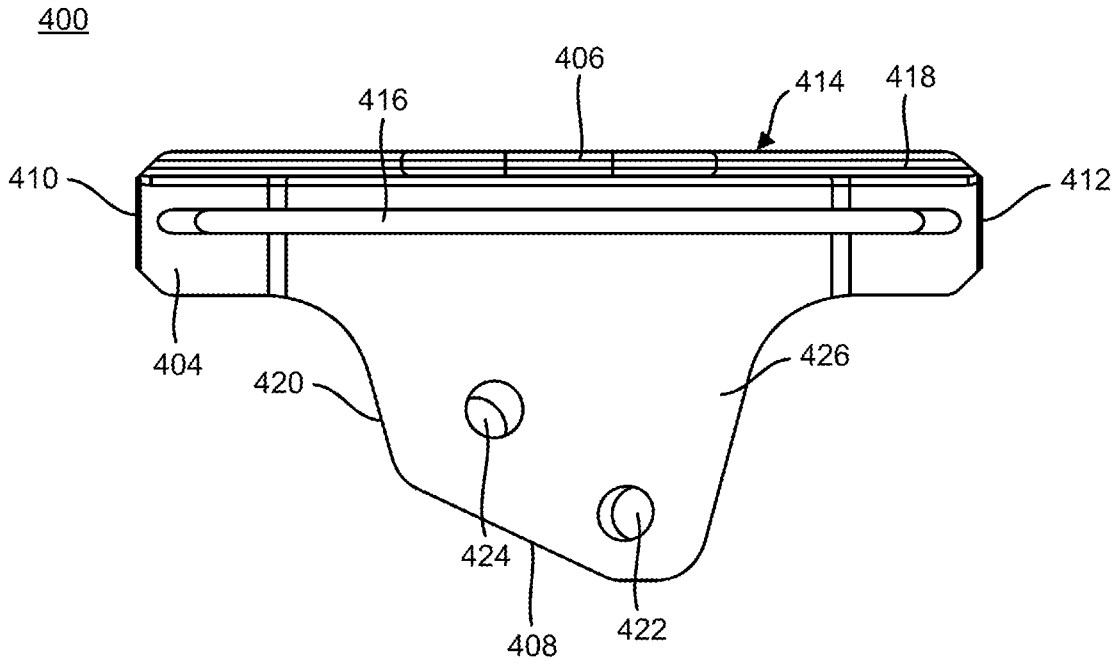
400
406
414
418
416
410
412
404
420
426
424
408
422

FIG. 44

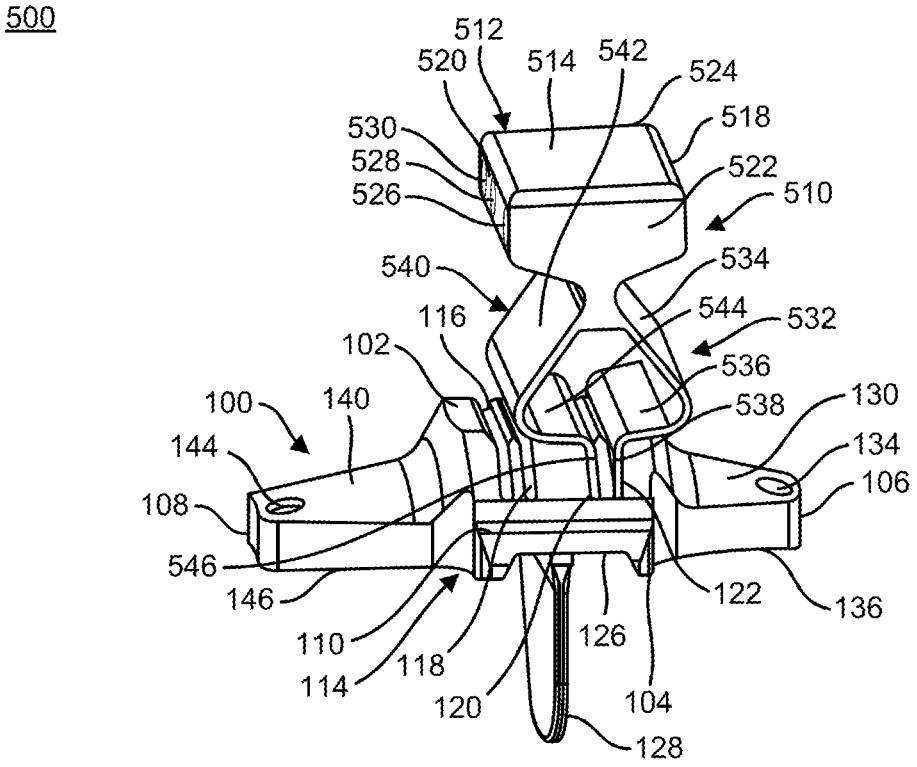
500
512
520
514
542
524
530
518
528
522
526
510
540
534
544
532
116
102
536
100
140
538
130
144
134
108
106
546
122
146
136
110
126
118
114
120
104
128

FIG. 45

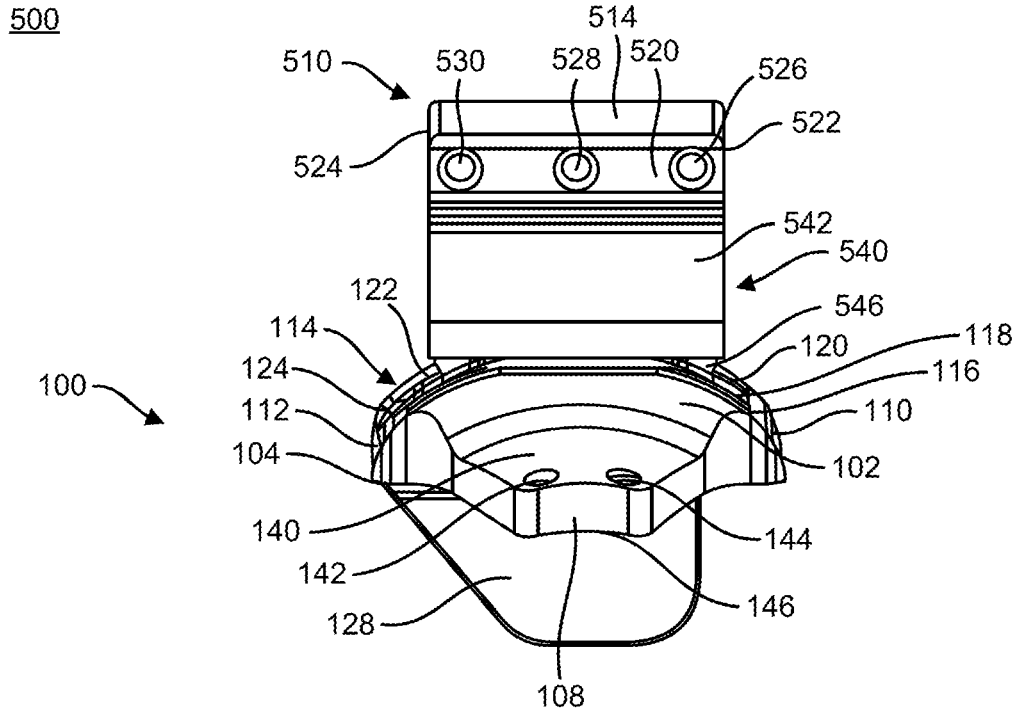
500
514
510
530
528
520
526
522
524
542
540
122
546
114
118
120
124
116
100
112
110
104
102
140
144
142
146
128
108

FIG. 46

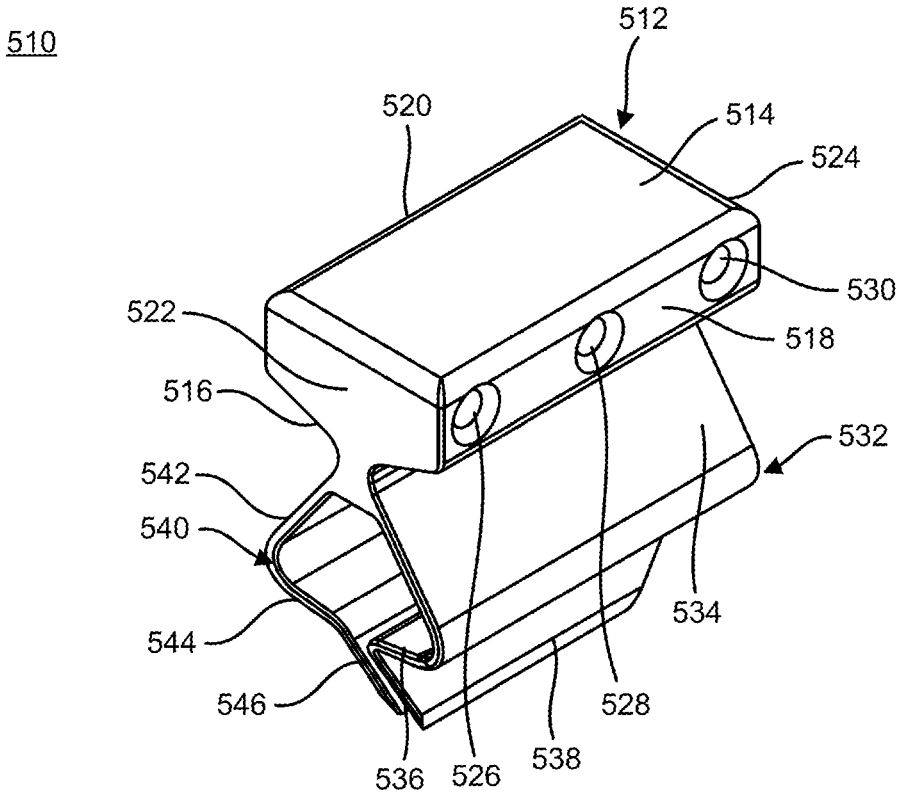
510
512
520
514
524
530
522
518
516
532
542
540
534
544
546
528
536
526
538

FIG. 47

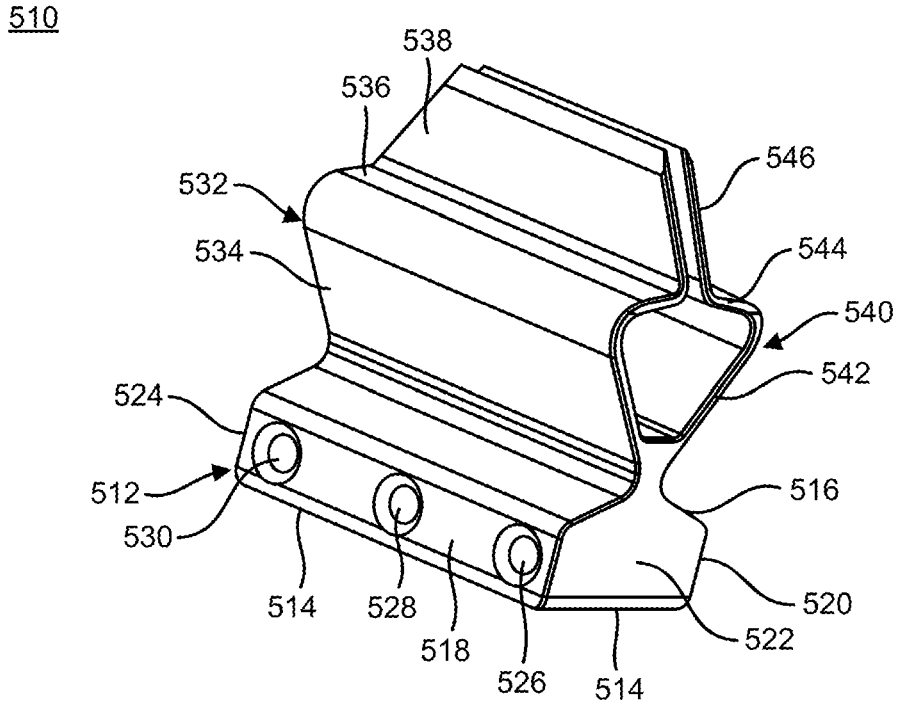
510
538
536
546
532
544
534
540
542
524
512
516
530
514
528
518
520
522
526
514

FIG. 48

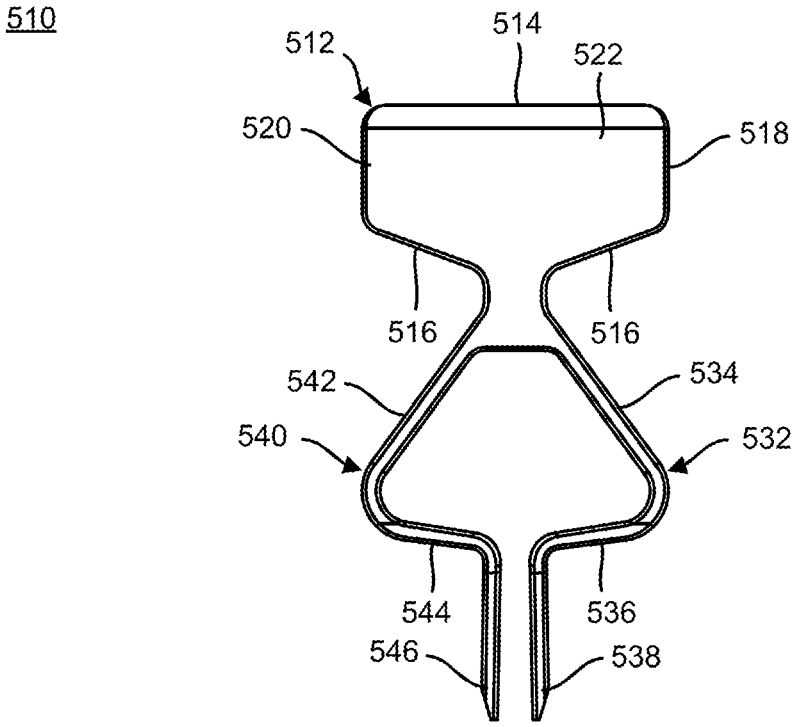
510
512
514
522
520
518
516
516
542
534
540
532
544
536
546
538

FIG. 49

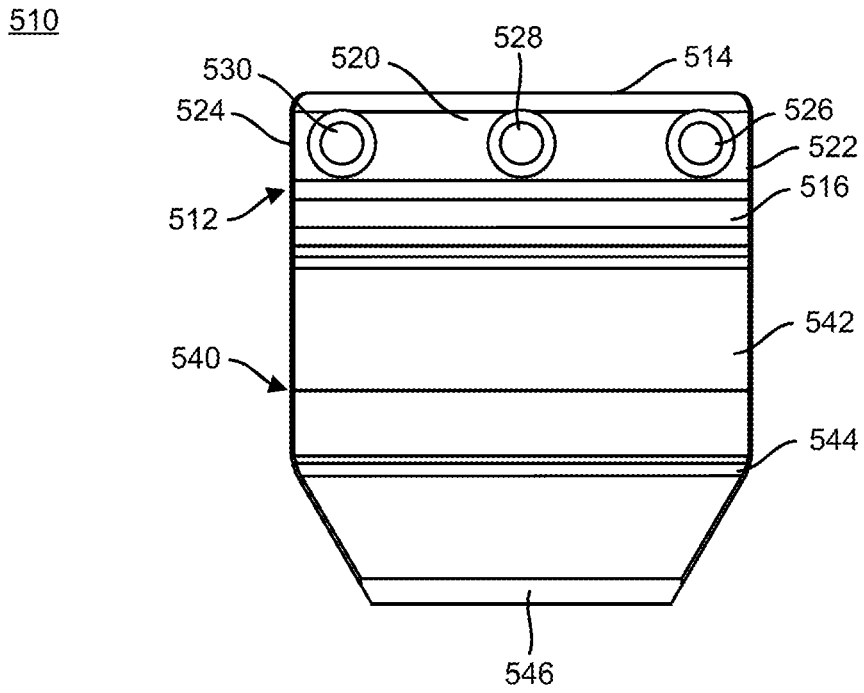
510
528
530
520
514
524
526
522
516
512
542
540
544
546

FIG. 50

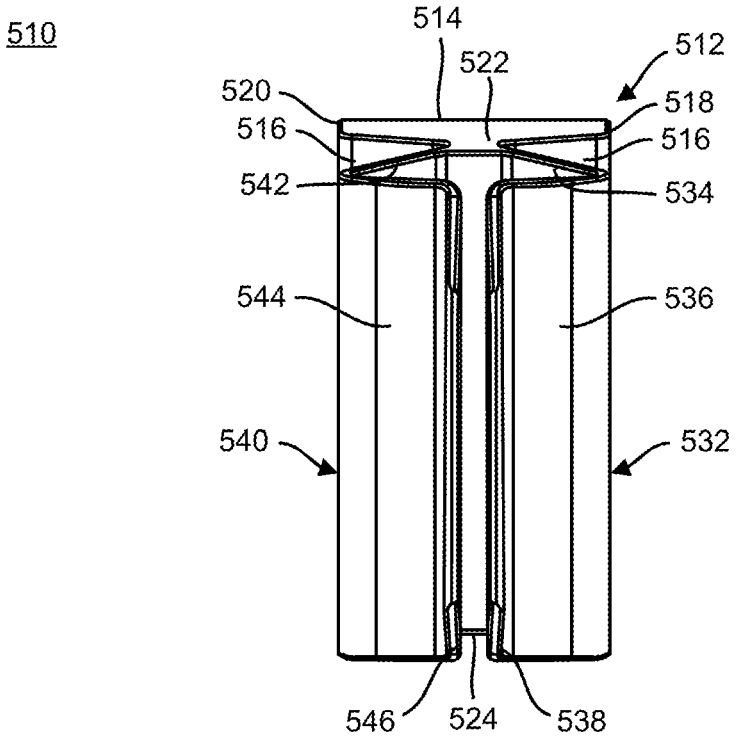
510
514
522
512
520
518
516
516
542
534
544
536
540
532
546
524
538

FIG. 51

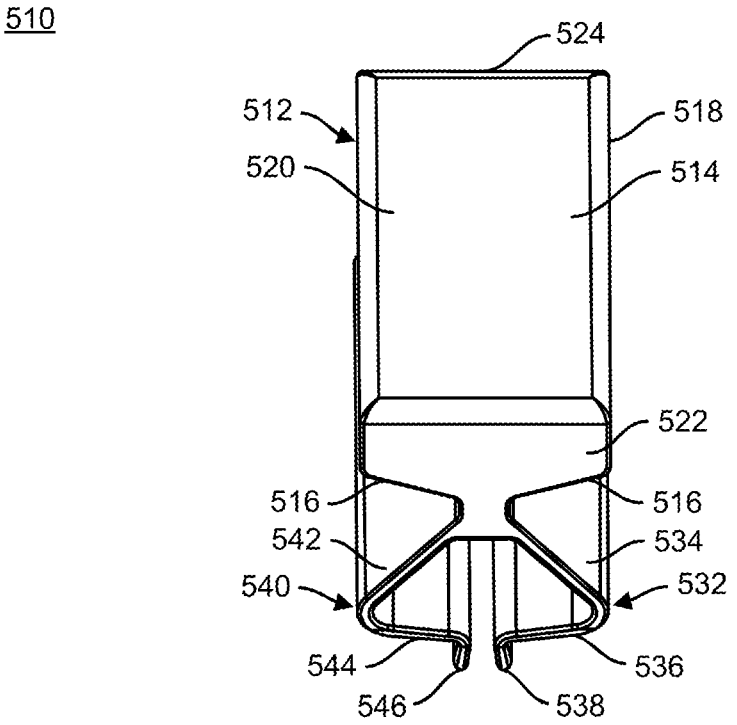
510
524
512
518
520
514
522
516
516
542
534
540
532
544
536
546
538

FIG. 52

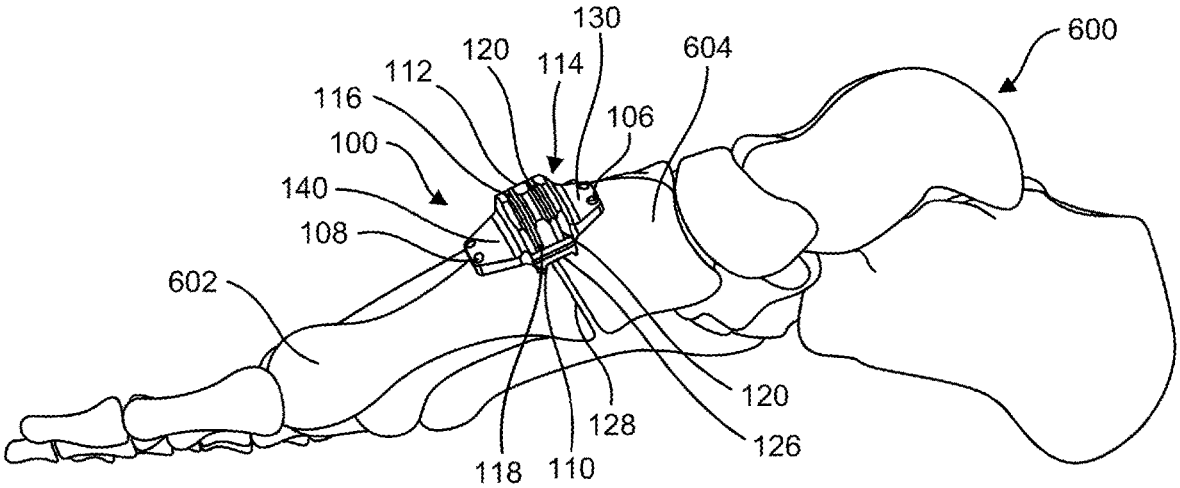
130
600
120
604
112
114
116
106
100
140
108
602
120
128
126
118
110

FIG. 53

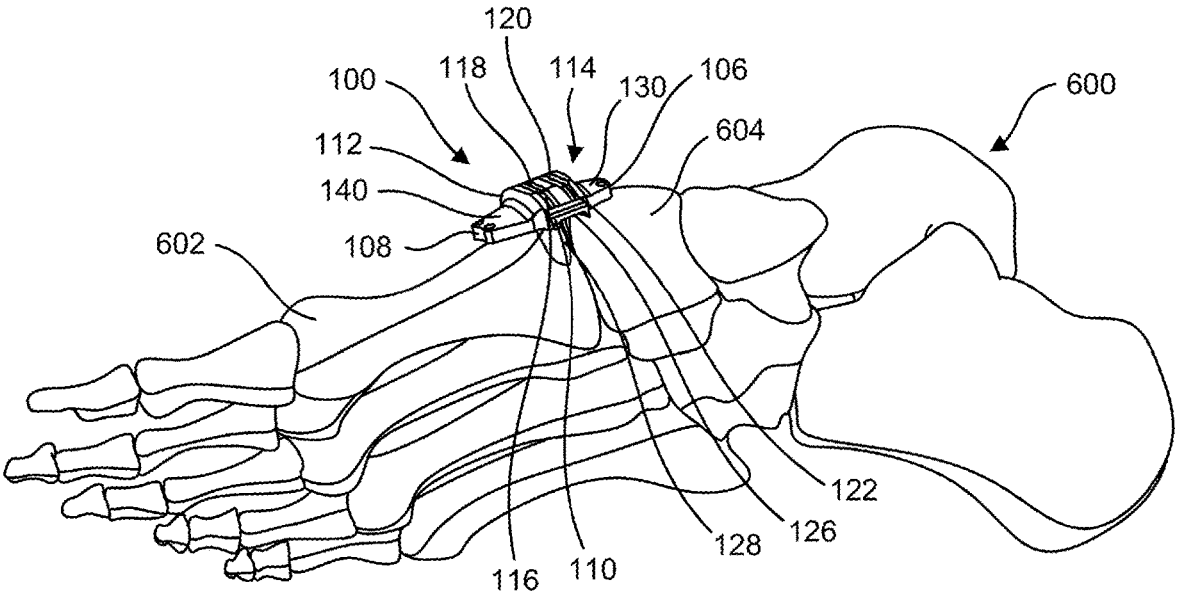
120
600
118
114
100
130
106
604
112
140
602
108
122
126
128
116
110

FIG. 54

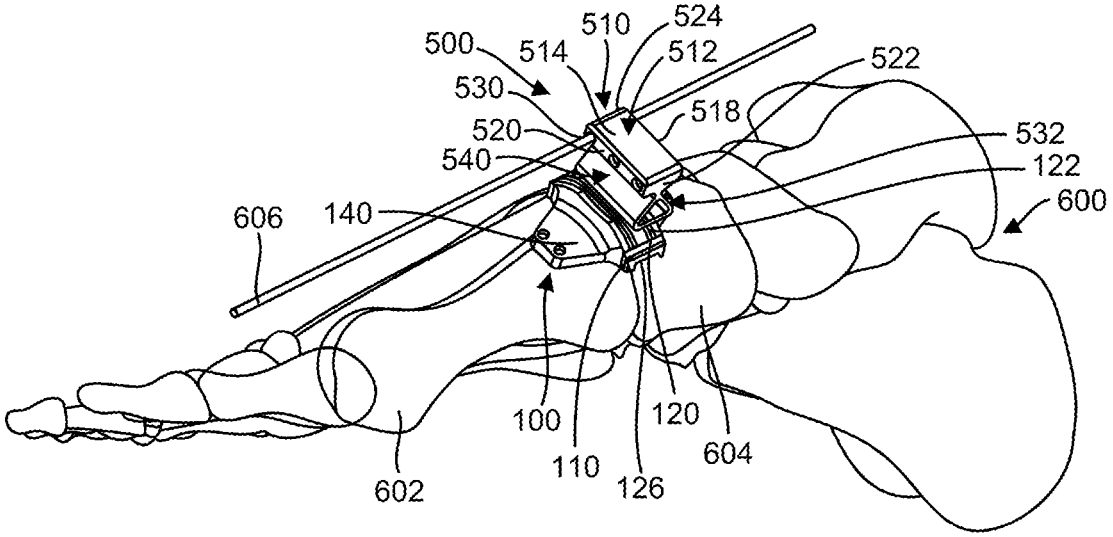
500
514
510
524
512
522
530
518
520
532
540
122
600
606
140
100
120
604
110
126
602

FIG. 55

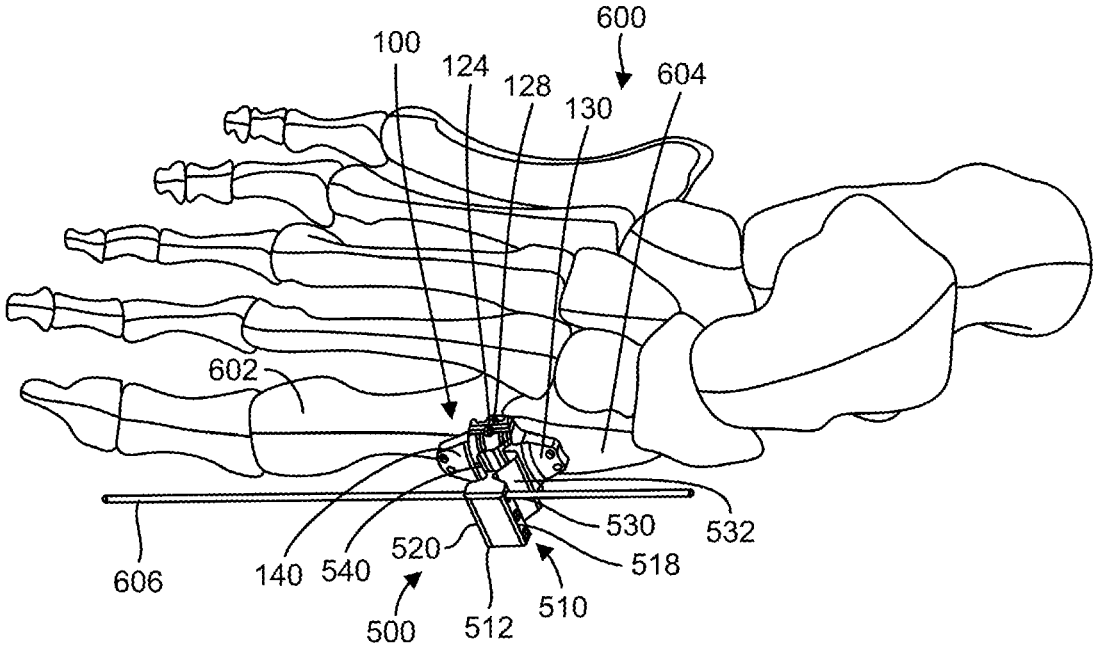
600
100
124
128
130
604
602
530
532
520
518
606
140
540
510
500
512

FIG. 56

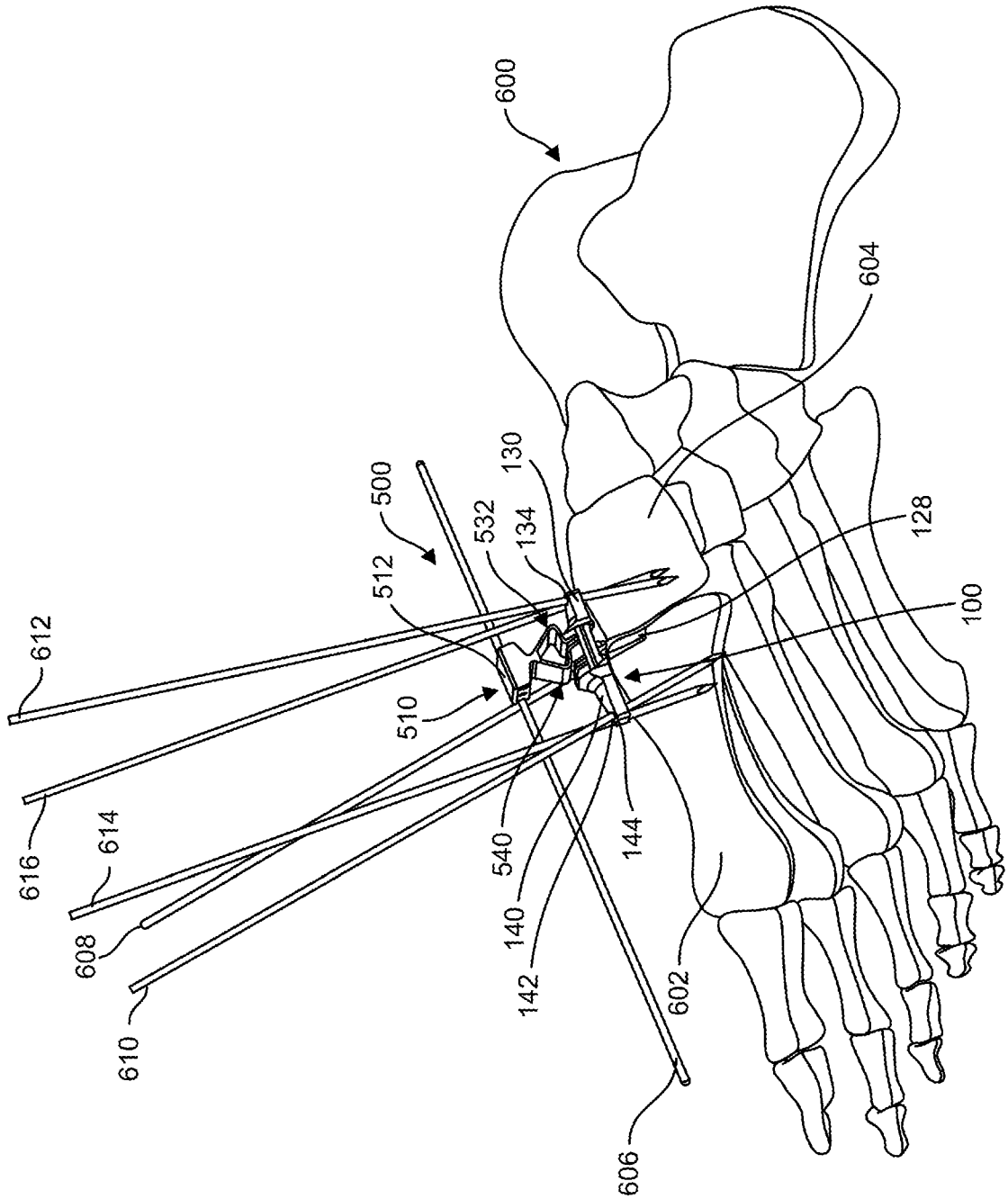
600
604
128
100
130
134
532
500
512
510
612
616
614
608
610
540
140
142
144
602
606

FIG. 57

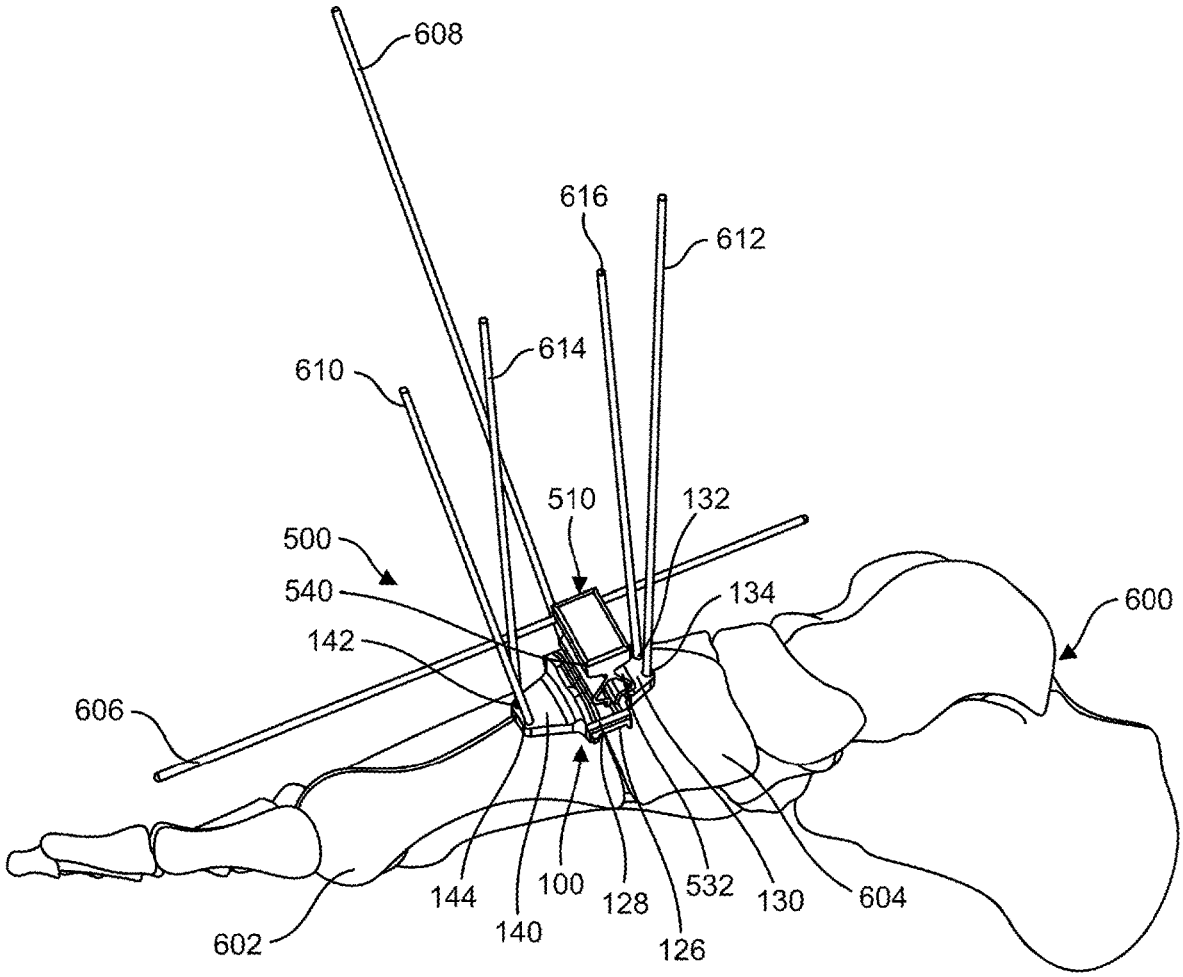
608
616
612
614
610
510
132
500
540
134
600
142
606
144
100
128
532
130
604
140
126
602

FIG. 58

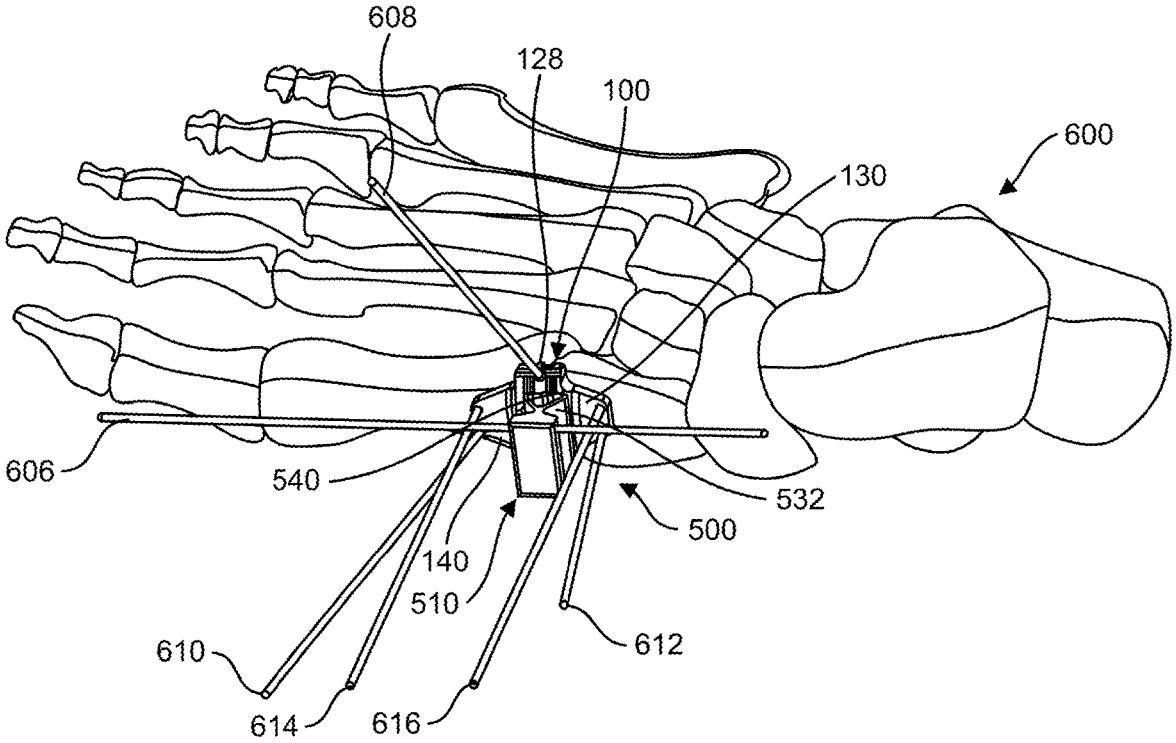
608
128
100
600
130
606
540
532
500
140
510
610
612
614
616

FIG. 59

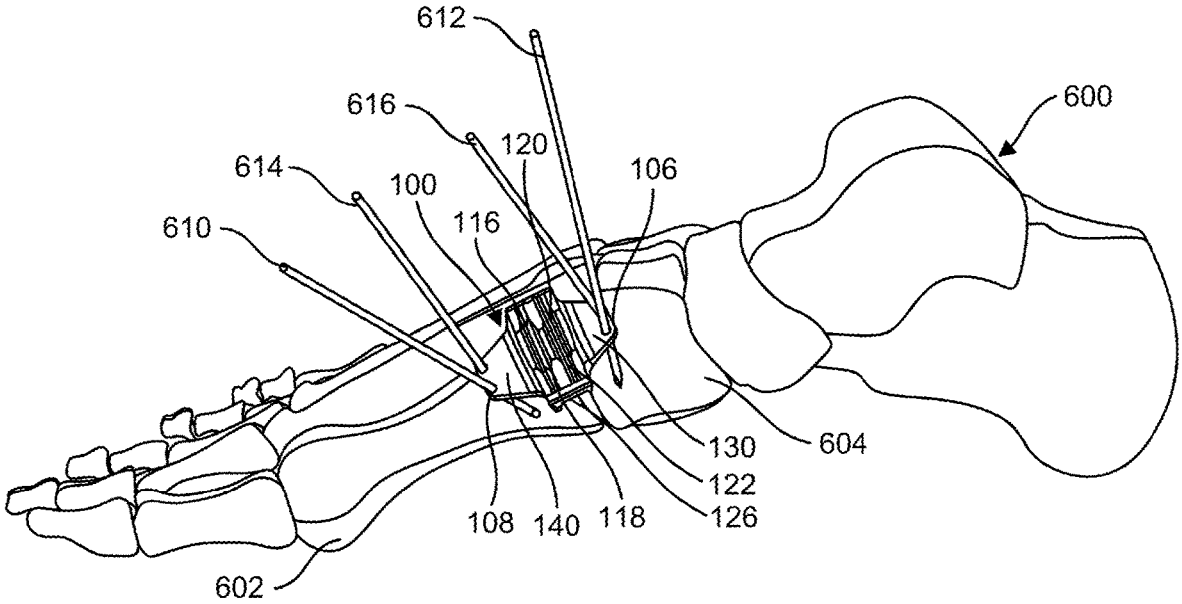
612
616
600
120
614
100
106
610
116
130
604
122
108
140
118
126
602

FIG. 60

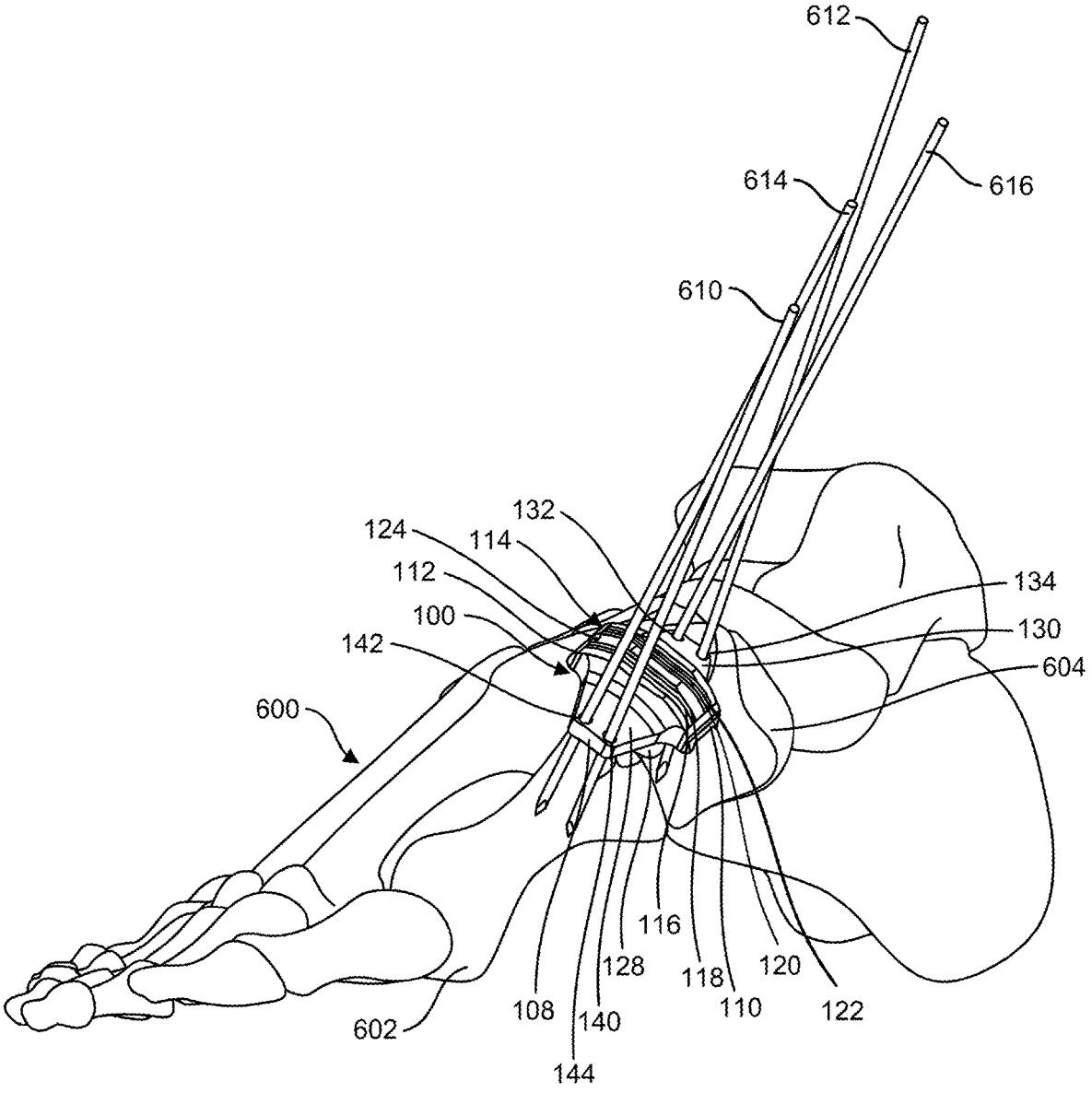
612
614
616
610
132
124
114
112
100
142
600
134
130
604
116
128
118
120
108
140
110
122
602
144

FIG. 61

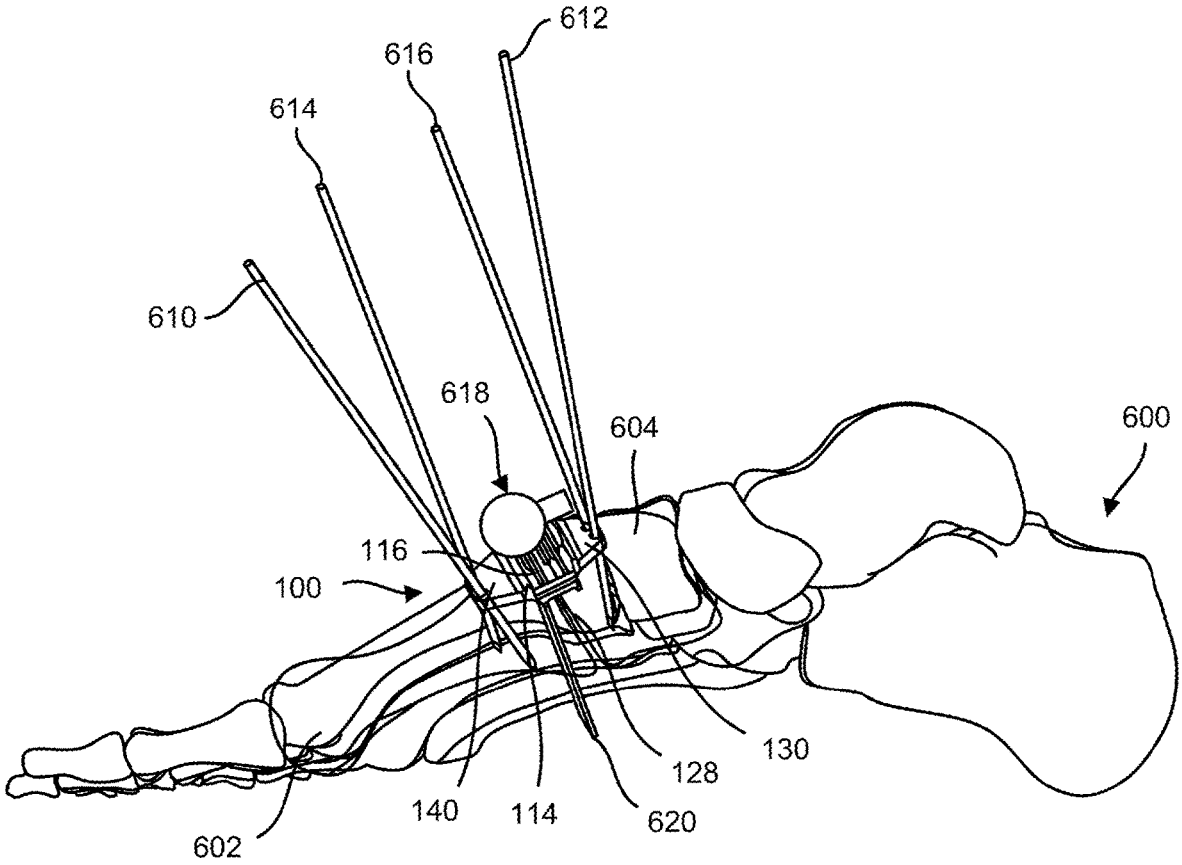

FIG. 62

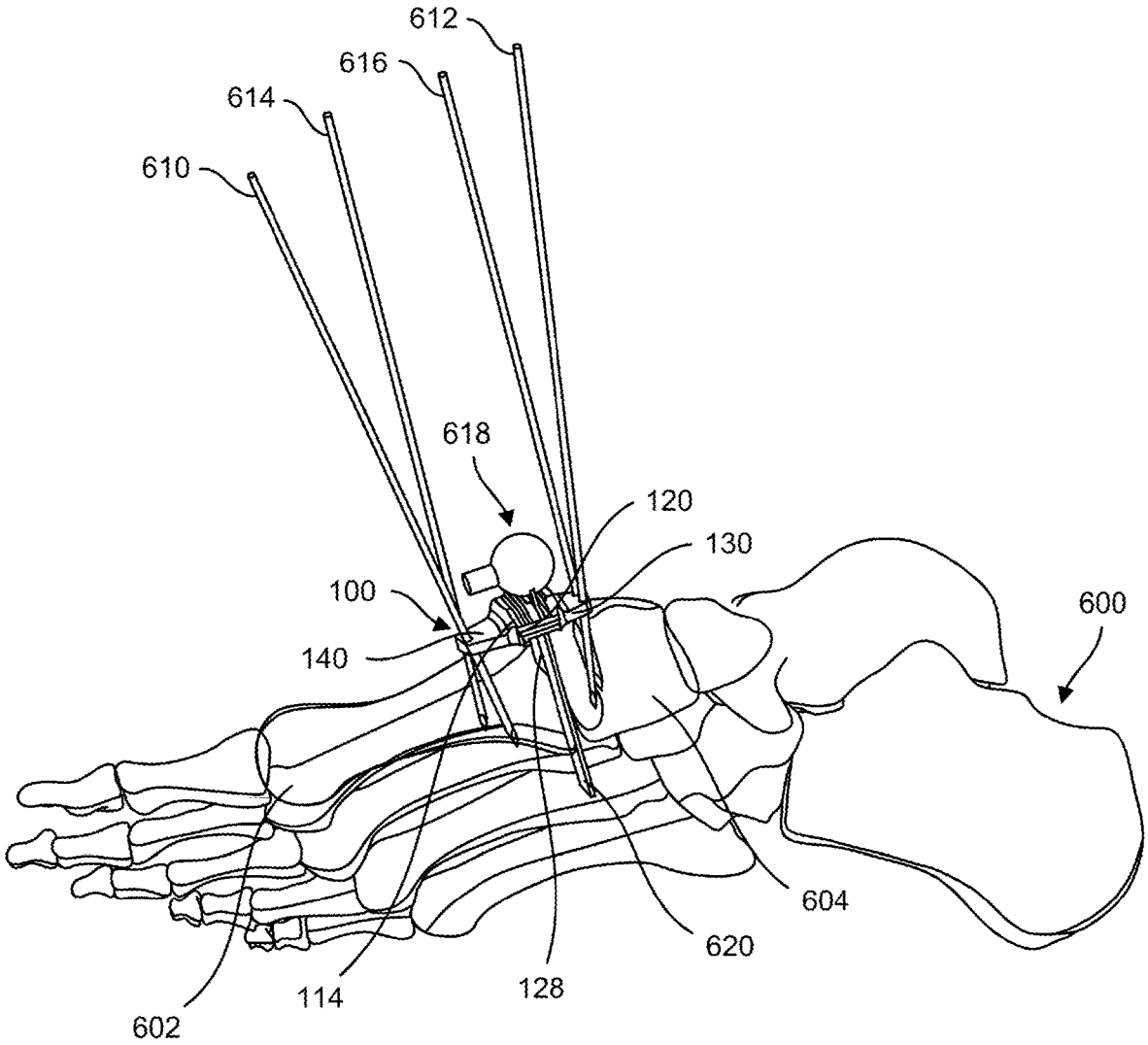

FIG. 63

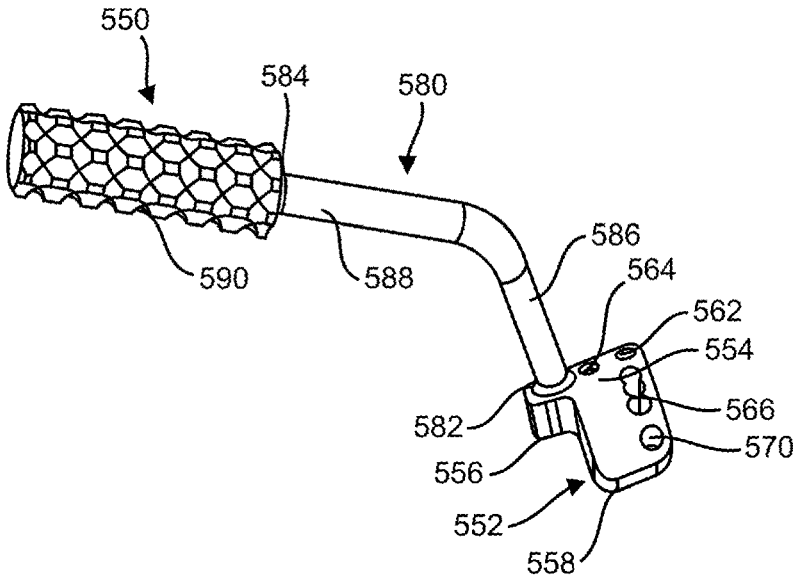
550
584
580
586
564
562
554
566
570
590
588
582
556
552
558

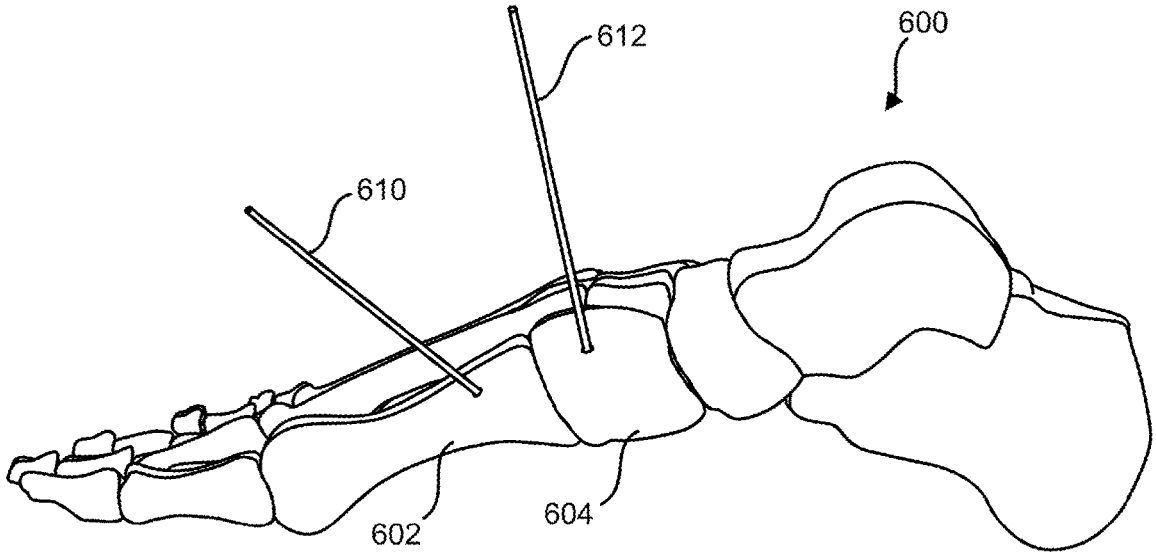
612
600
610
602
604

FIG. 64

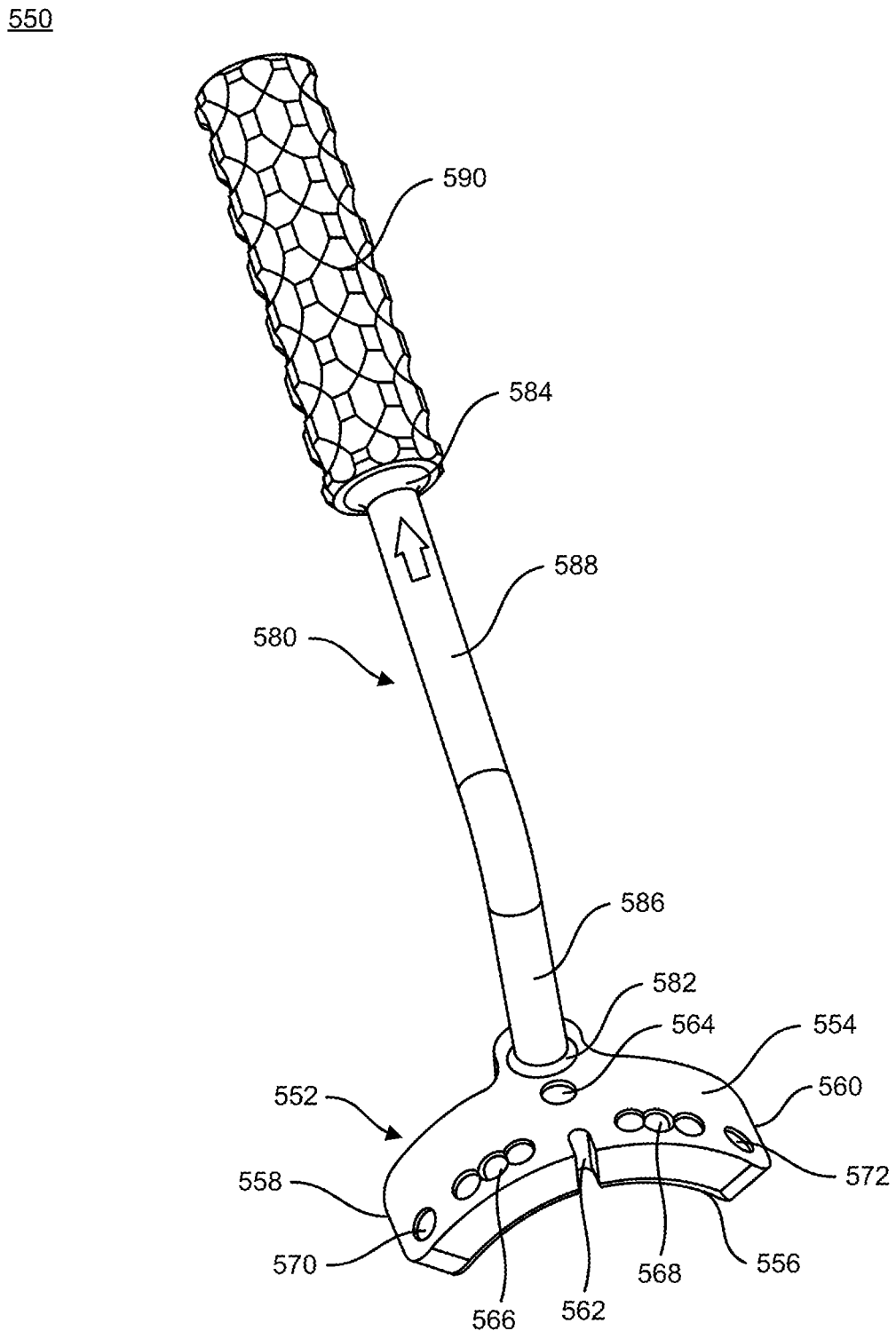
550
590
584
588
580
586
582
564
554
560
552
572
558
570
568
556
566
562

FIG. 65

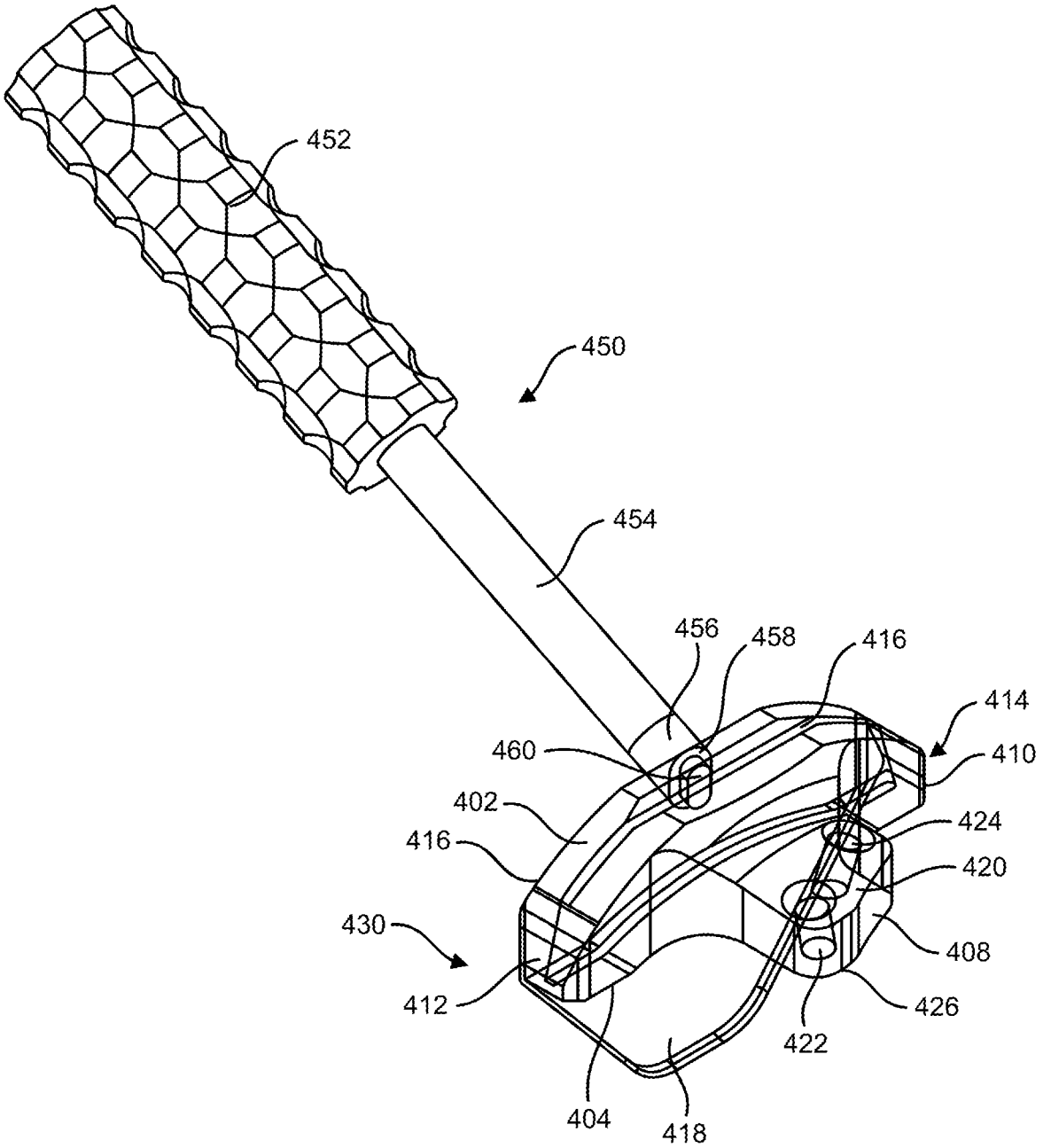
452
450
454
456
458
416
414
460
410
402
424
416
420
430
408
412
426
422
404
418

FIG. 66

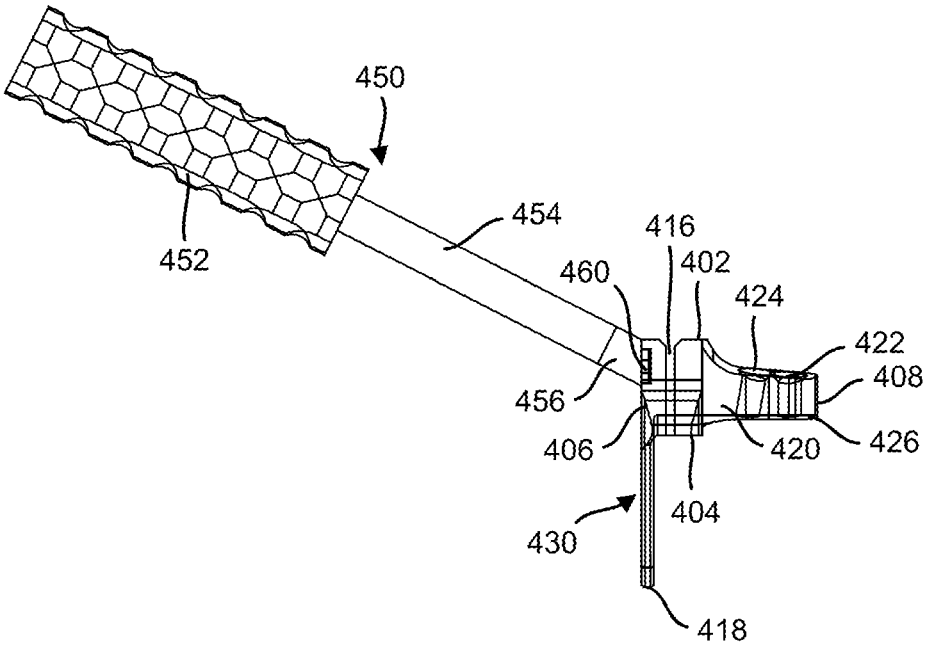
450
452
454
416
402
460
424
422
408
456
406
420
426
404
430
418

FIG. 67

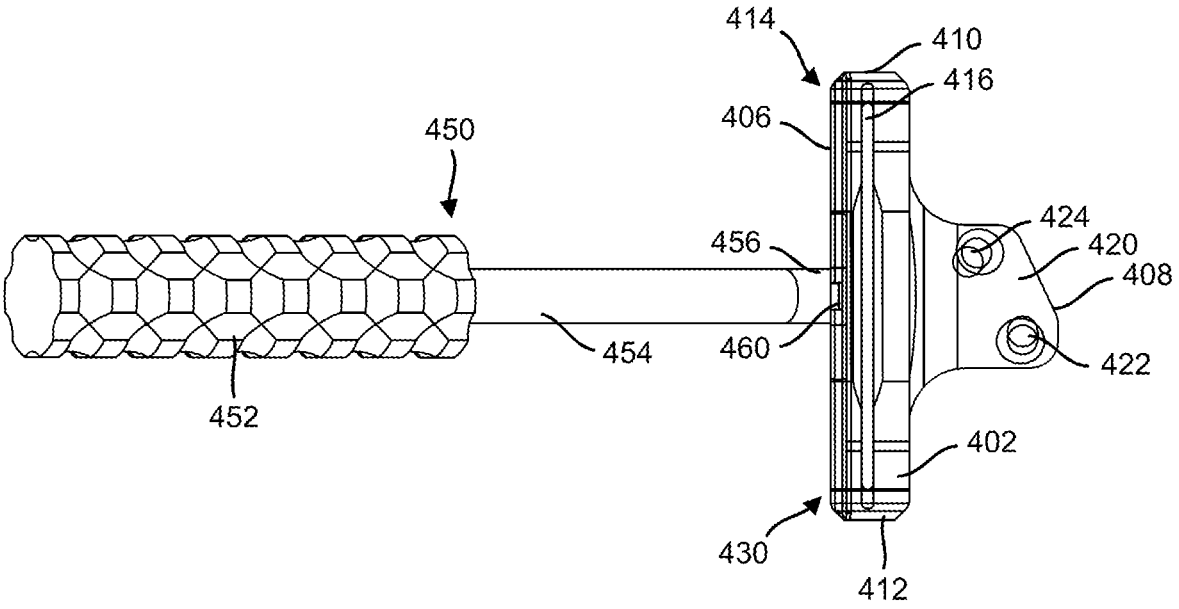
414
410
416
406
450
424
456
420
408
454
460
422
452
402
430
412

FIG. 68

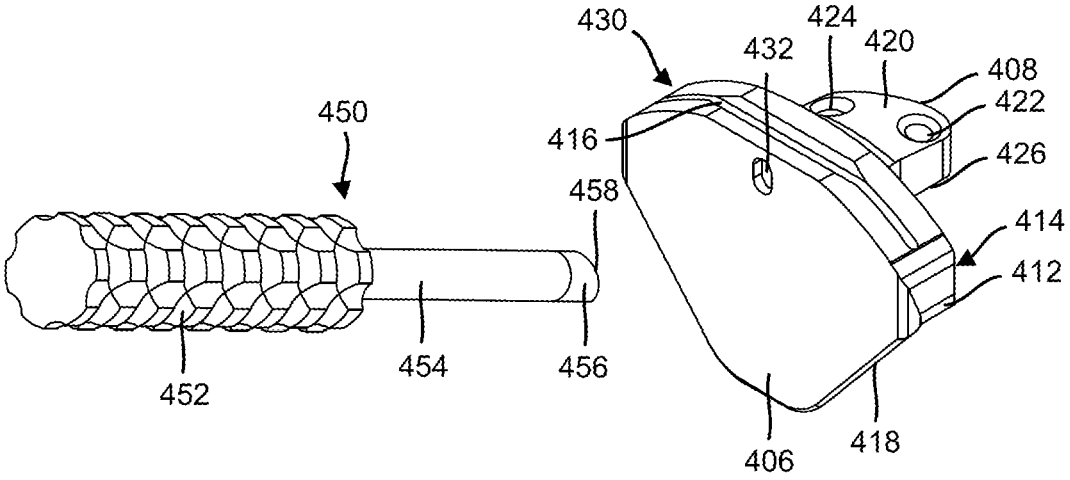
430
424
420
432
408
422
450
416
426
458
414
412
452
454
456
406
418

FIG. 69

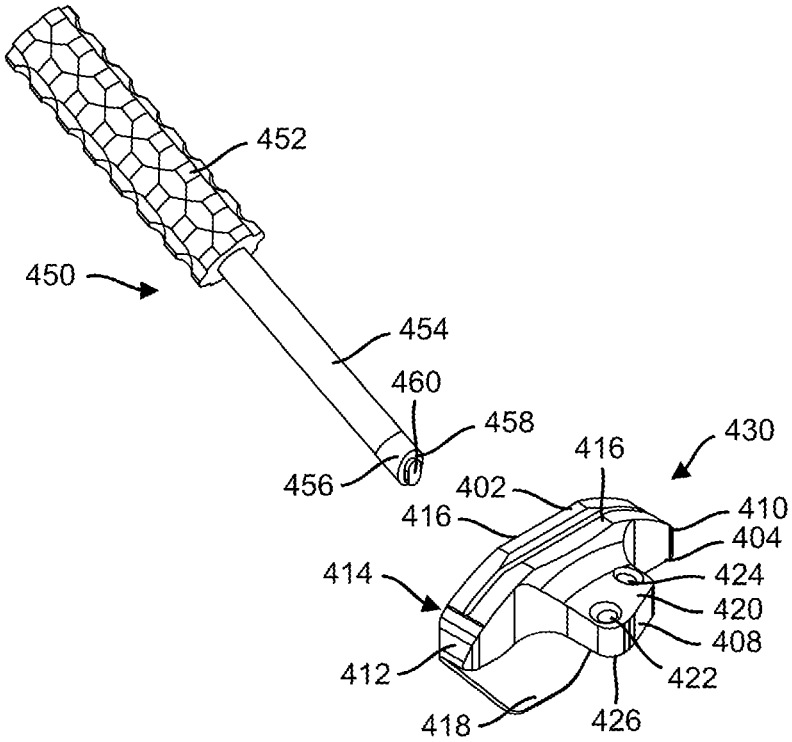
452
450
454
460
458
430
416
456
402
410
416
404
414
424
420
408
412
422
418
426

FIG. 70

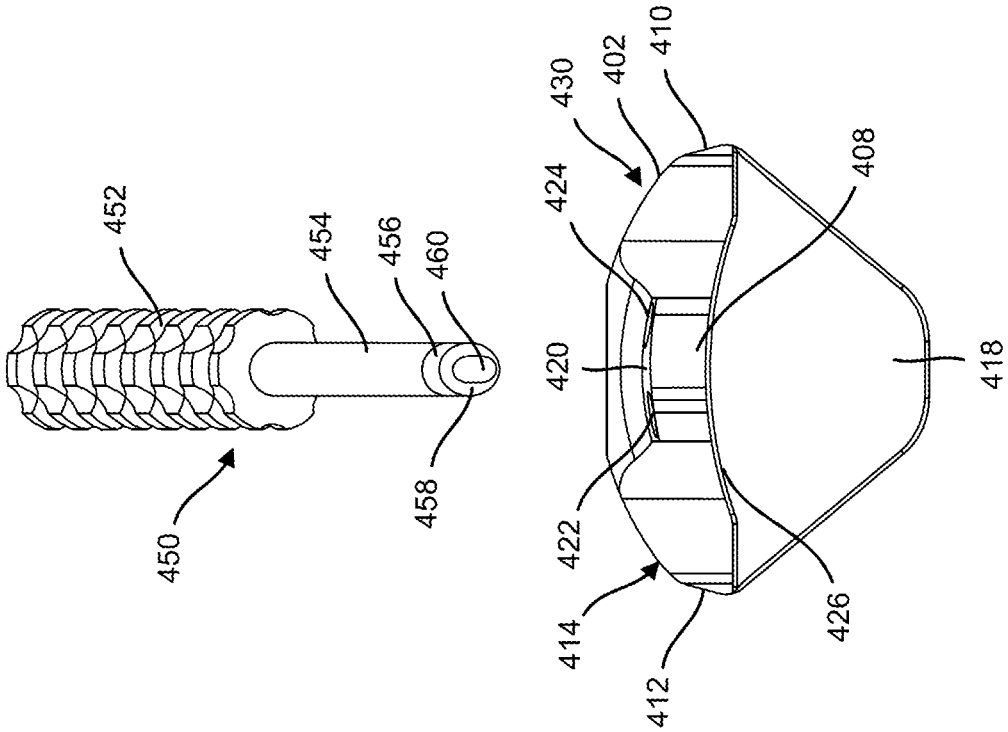
450
452
454
456
458
460
402
408
410
412
414
418
420
422
424
426
430

FIG. 72

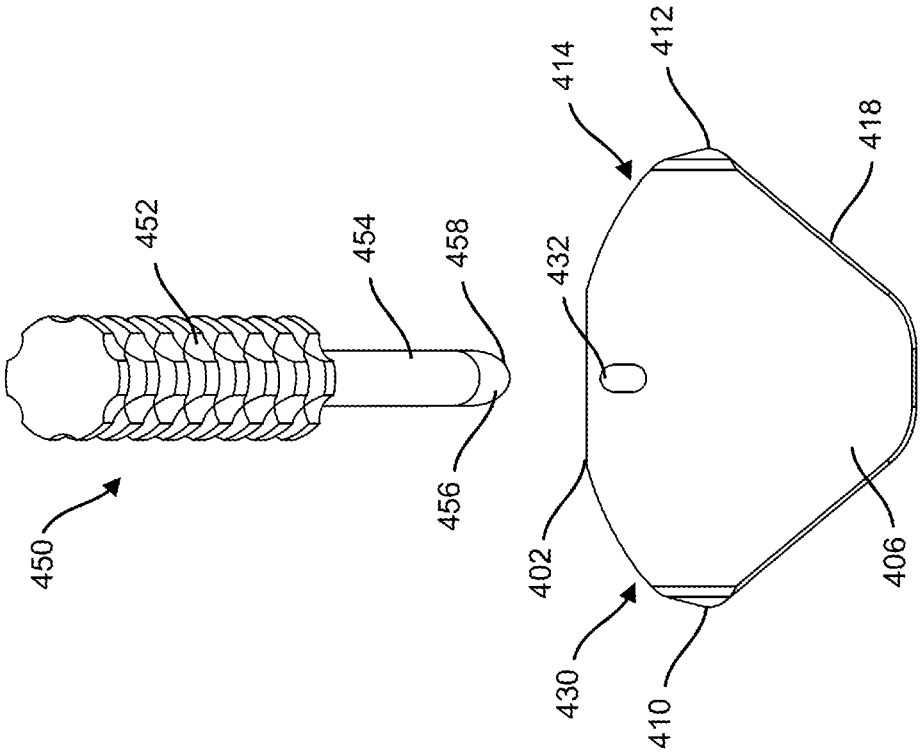
450
452
454
456
458
402
406
410
412
414
418
430
432

FIG. 71

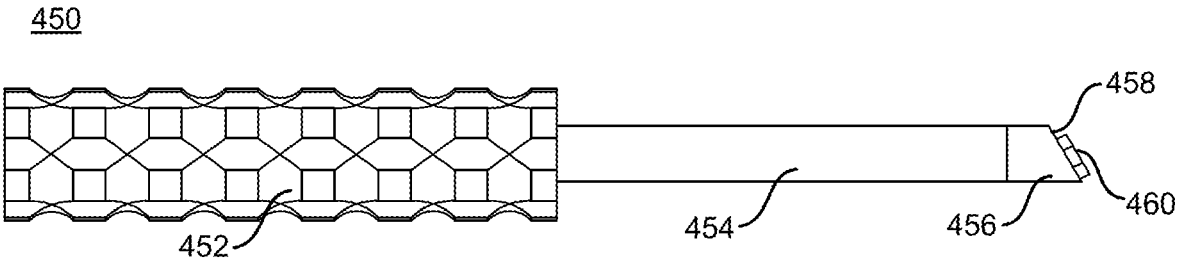

FIG. 73

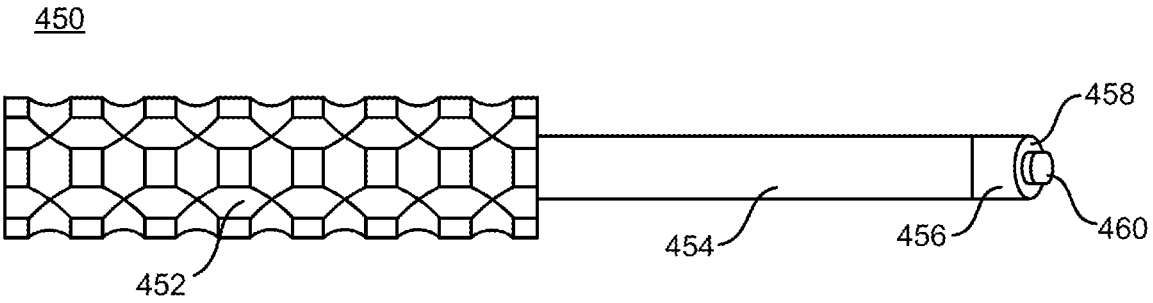

FIG. 74

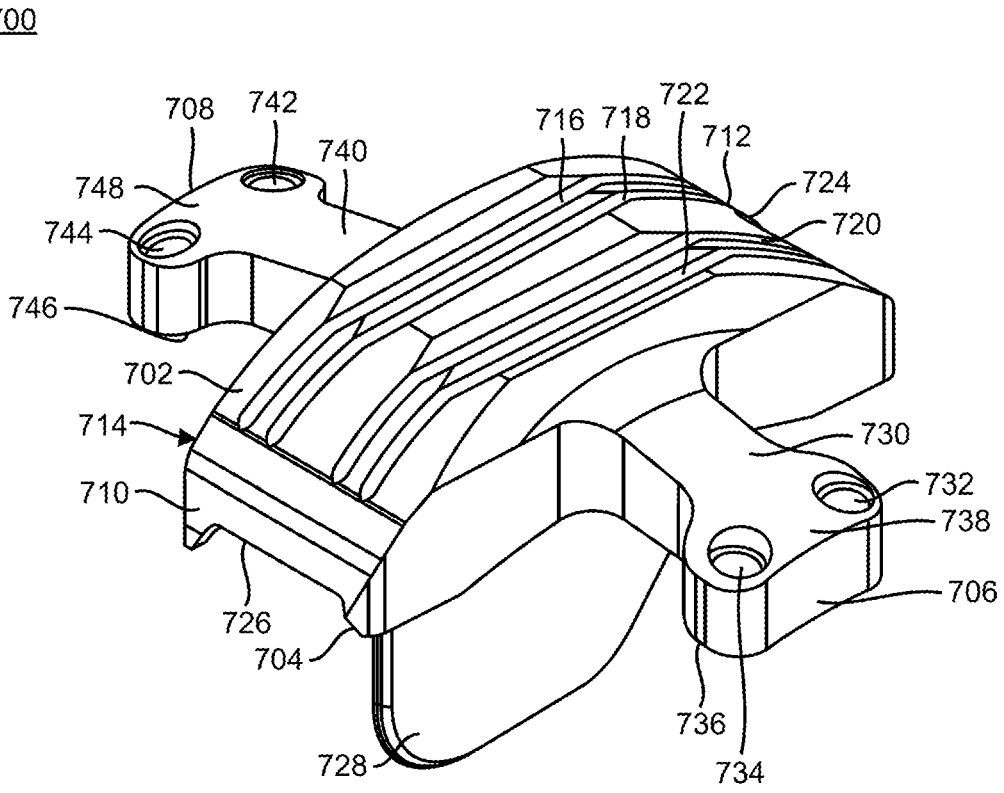
700
708
742
740
748
744
746
702
714
710
726
704
728
716
718
722
712
724
720
730
732
738
706
736
734

FIG. 75

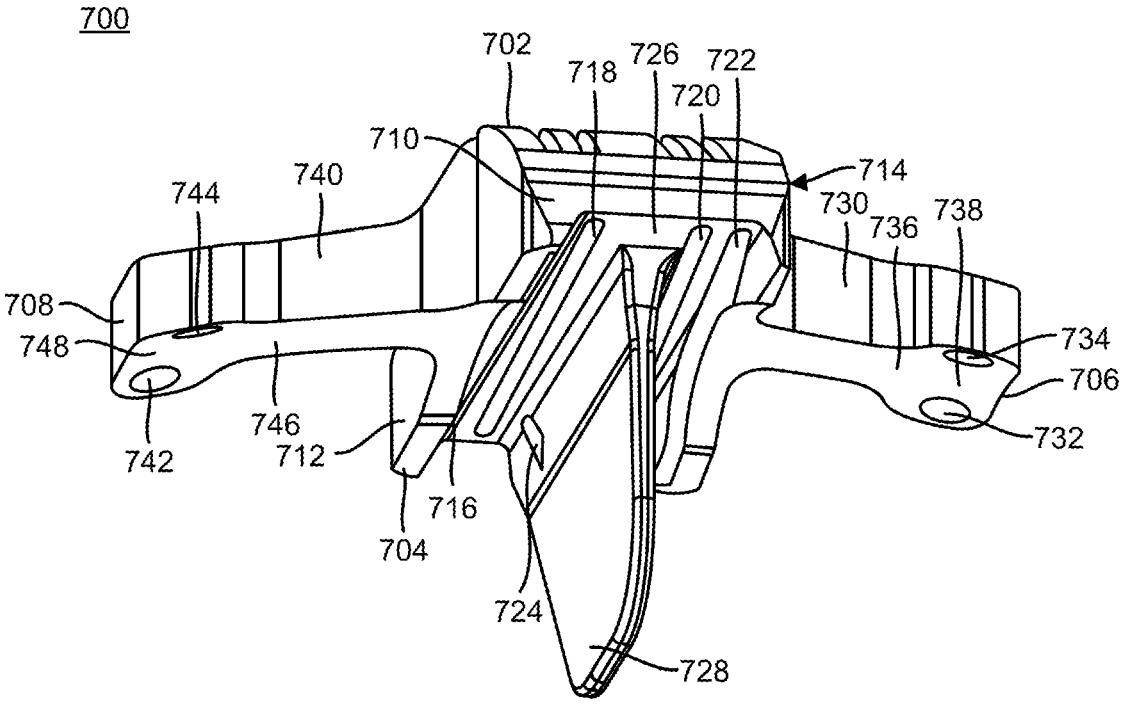
700
702
718
726
722
720
710
714
744
740
730
736
738
708
748
742
746
712
716
704
724
728
734
706
732

FIG. 76

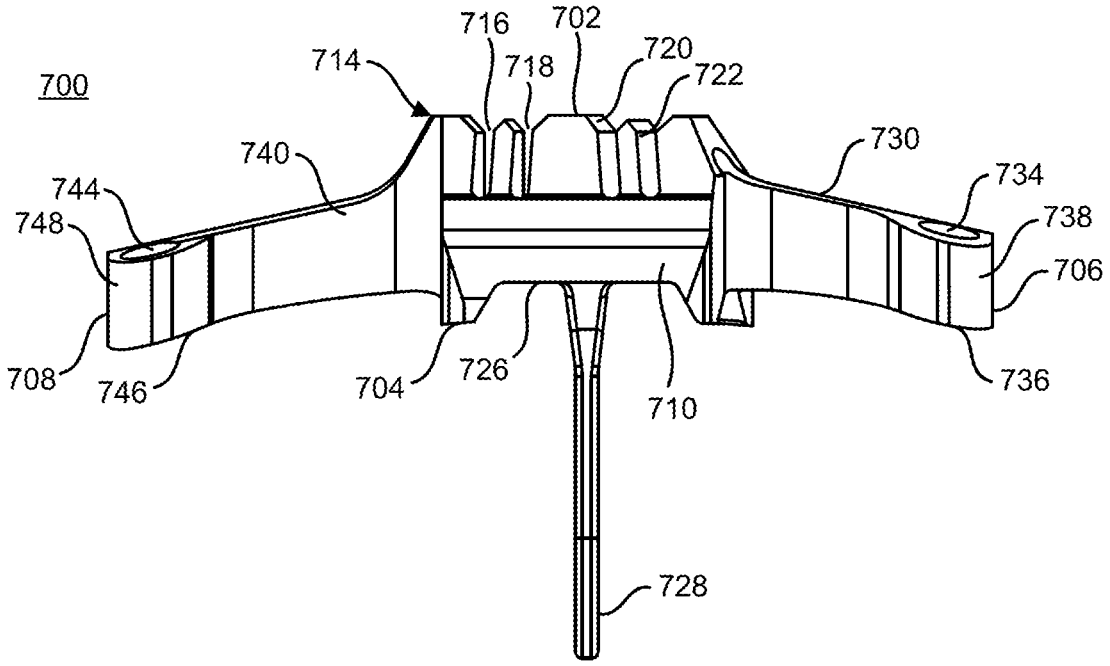
700
714
716
702
718
720
722
740
730
744
748
734
738
706
708
746
704
726
710
736
728

FIG. 77

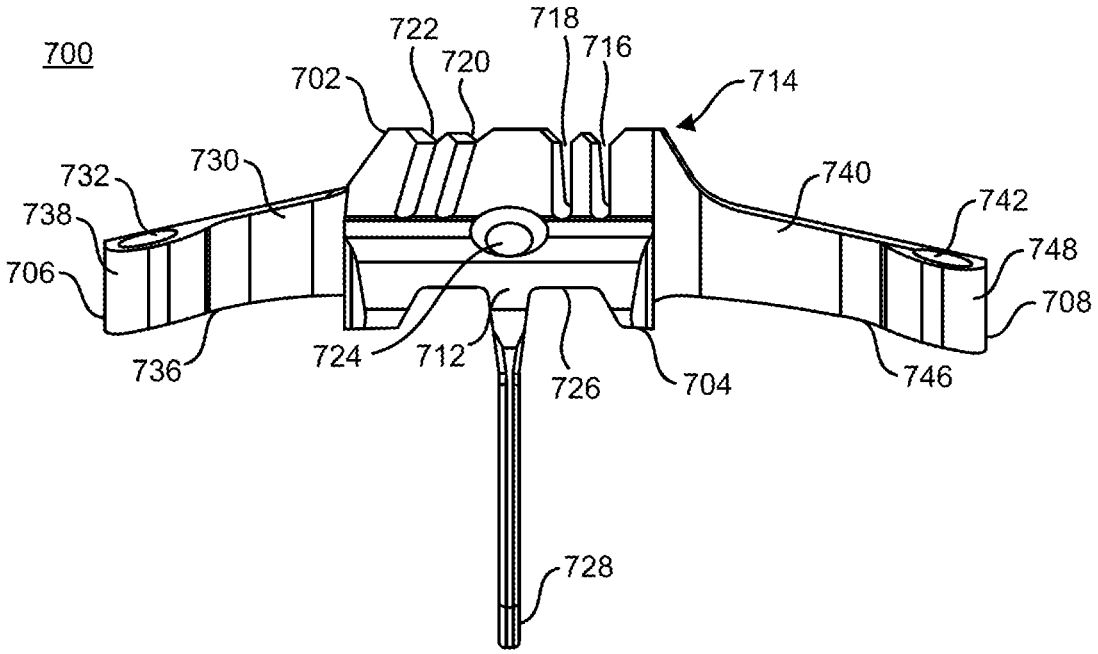
700
722
718
720
716
702
714
730
740
732
738
742
748
706
708
736
724
712
726
704
746
728

FIG. 78

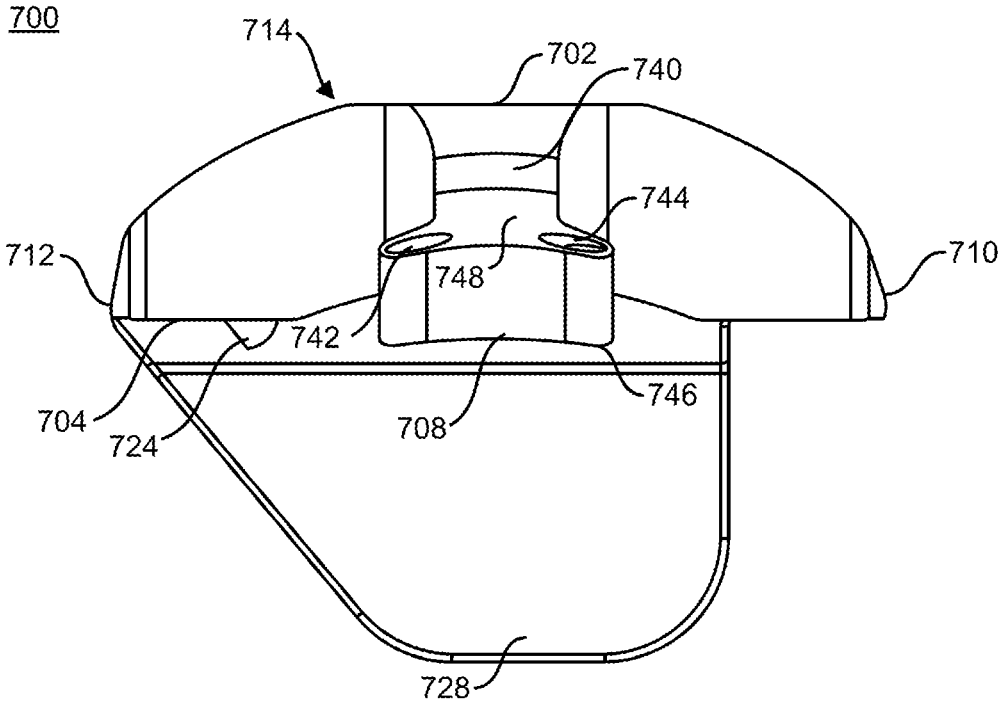
700
714
702
740
744
712
748
710
742
746
704
724
708
728

FIG. 79

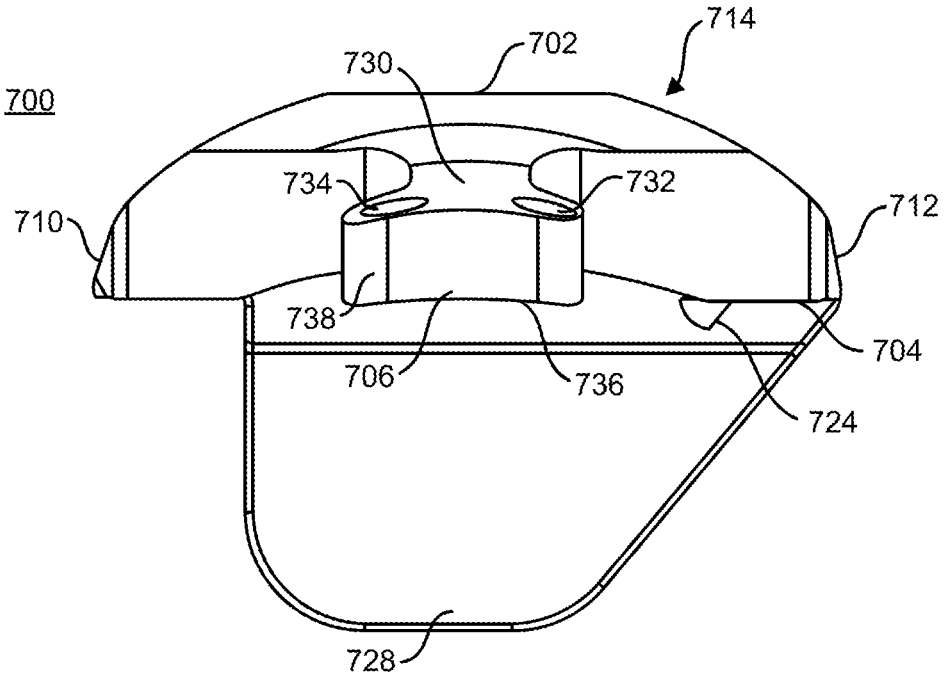
714
702
730
700
734
732
710
712
738
704
706
736
724
728

FIG. 80

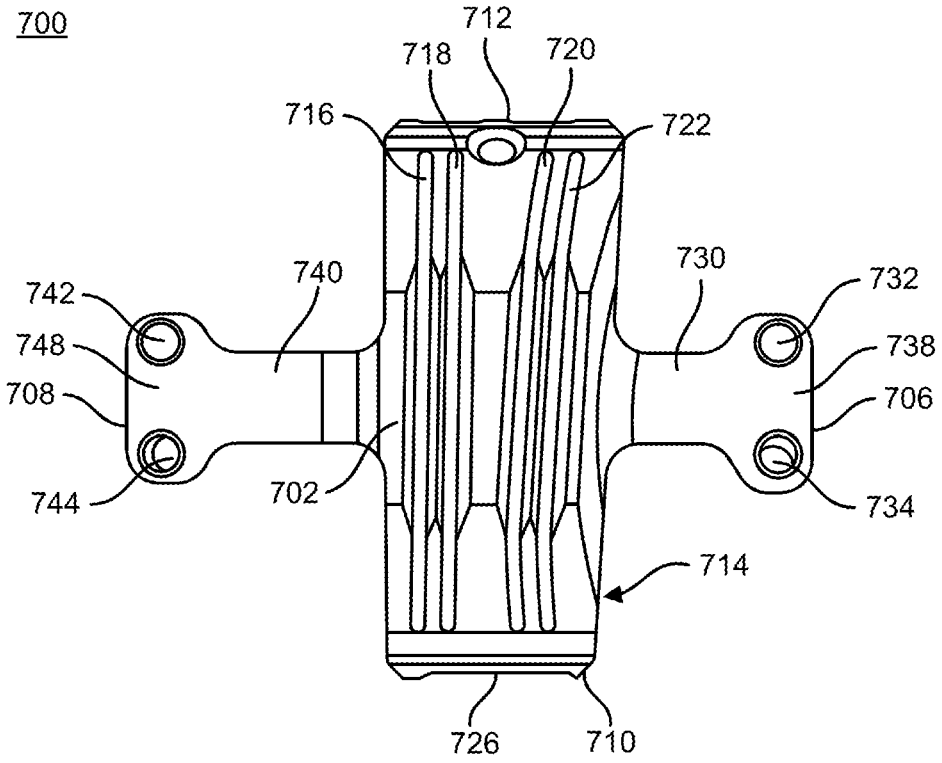
700
712
718
720
716
722
740
730
742
732
748
738
708
706
744
702
734
714
726
710

FIG. 81

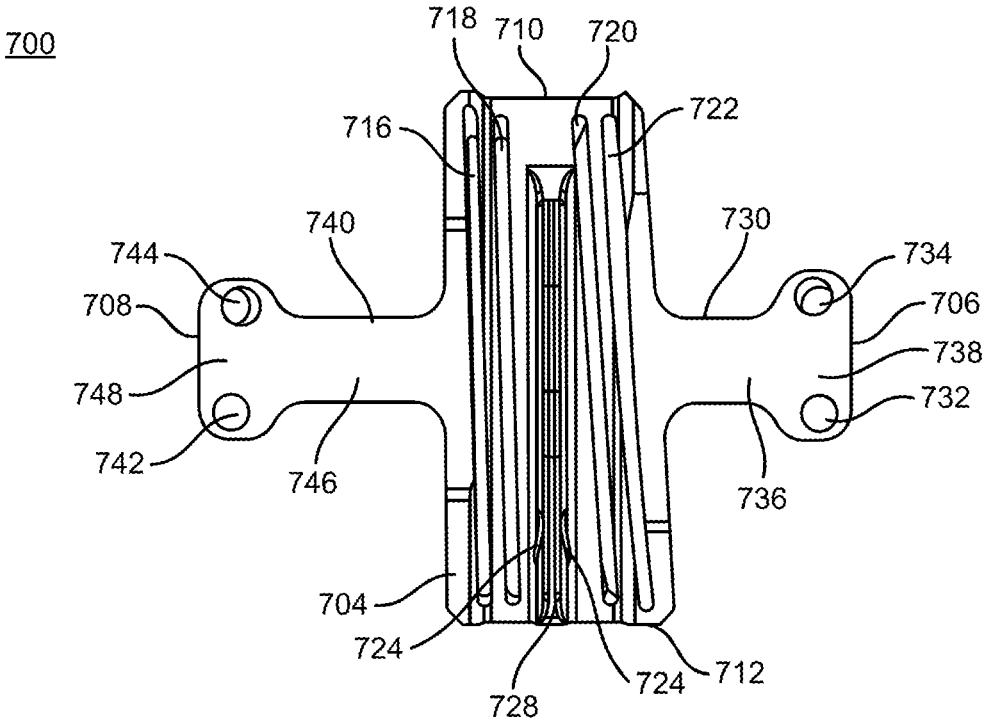
700
718
710
720
716
722
740
730
744
734
708
706
738
748
732
742
746
736
704
724
724
712
728

FIG. 82

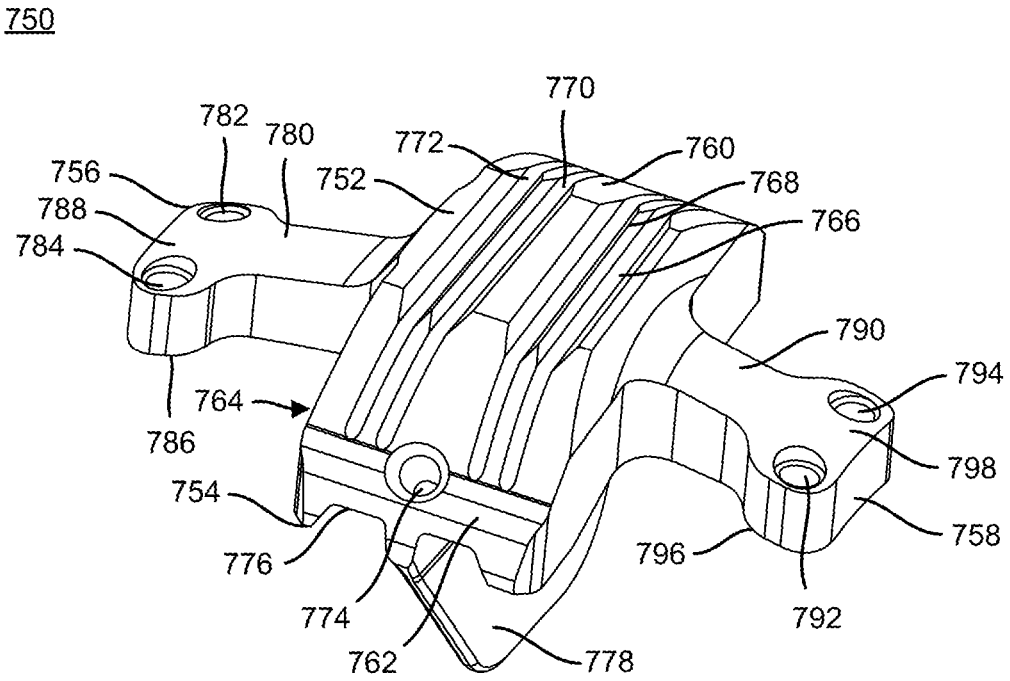
750
770
782
780
772
760
756
752
768
788
766
784
790
794
764
786
798
754
758
776
796
774
792
762
778

FIG. 83

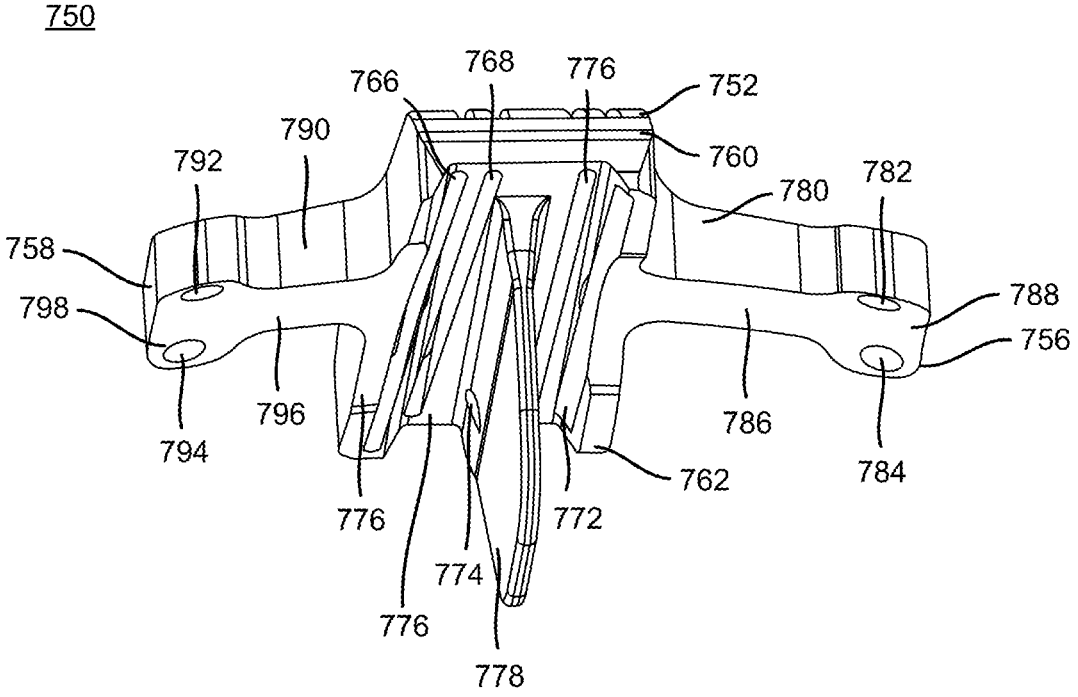
750
768
776
766
752
790
760
792
780
782
758
788
798
756
796
786
794
784
762
776
772
774
776
778

FIG. 84

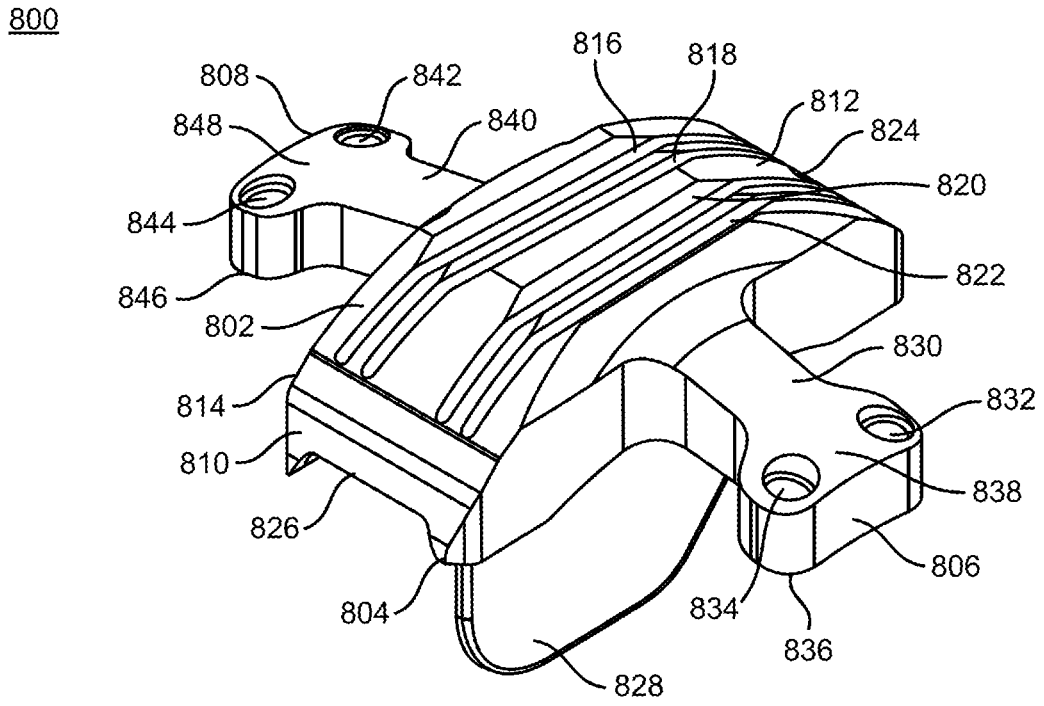
800
808
842
816
818
848
840
812
824
820
844
822
846
802
830
814
832
810
838
826
806
804
834
836
828

FIG. 85

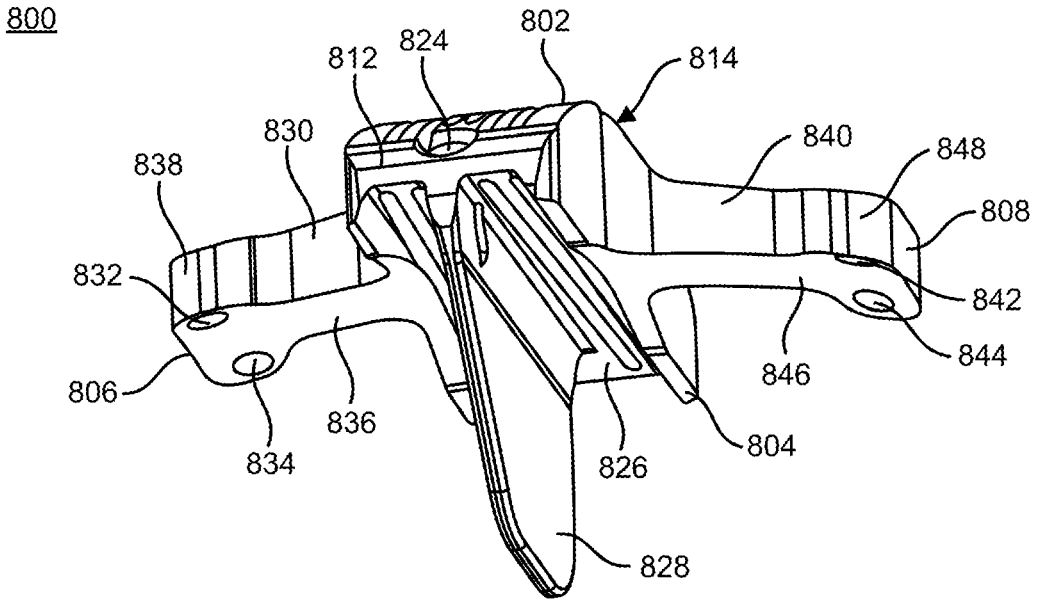
800
802
824
812
814
830
840
848
838
808
832
842
844
846
806
836
834
826
804
828

FIG. 86

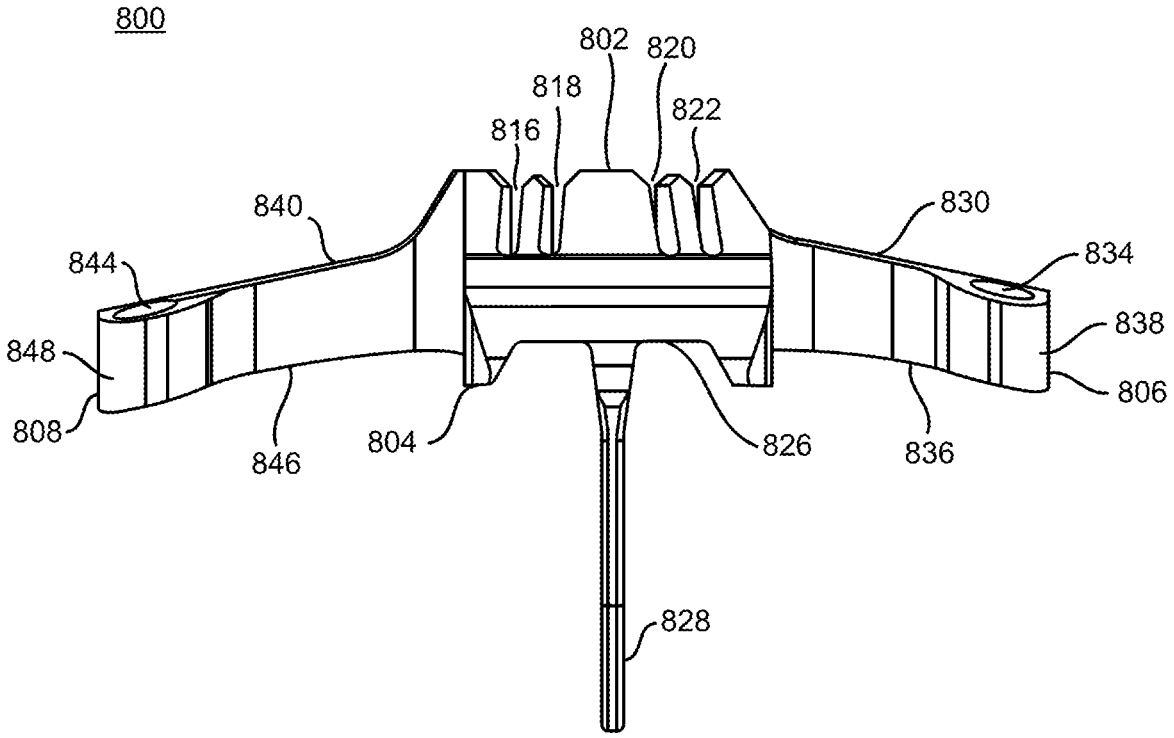
800
802
820
818
822
816
840
830
844
834
838
848
806
808
846
804
826
836
828

FIG. 87

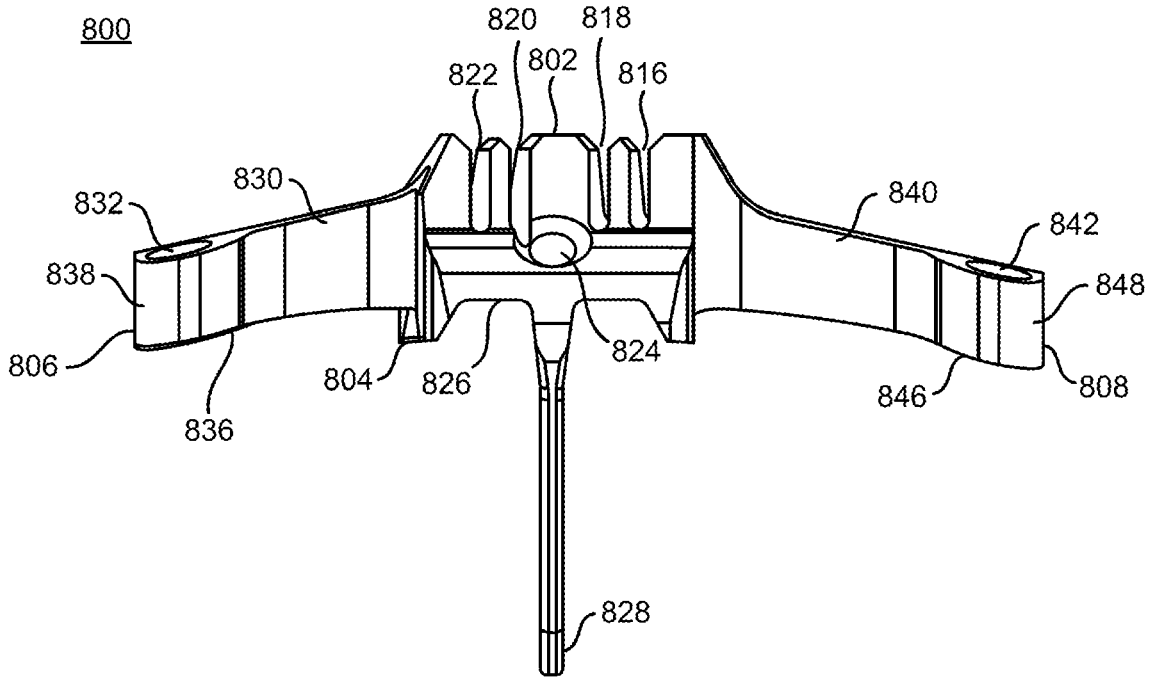
800
820
818
822
802
816
830
840
832
842
838
848
806
824
804
826
846
808
836
828

FIG. 88

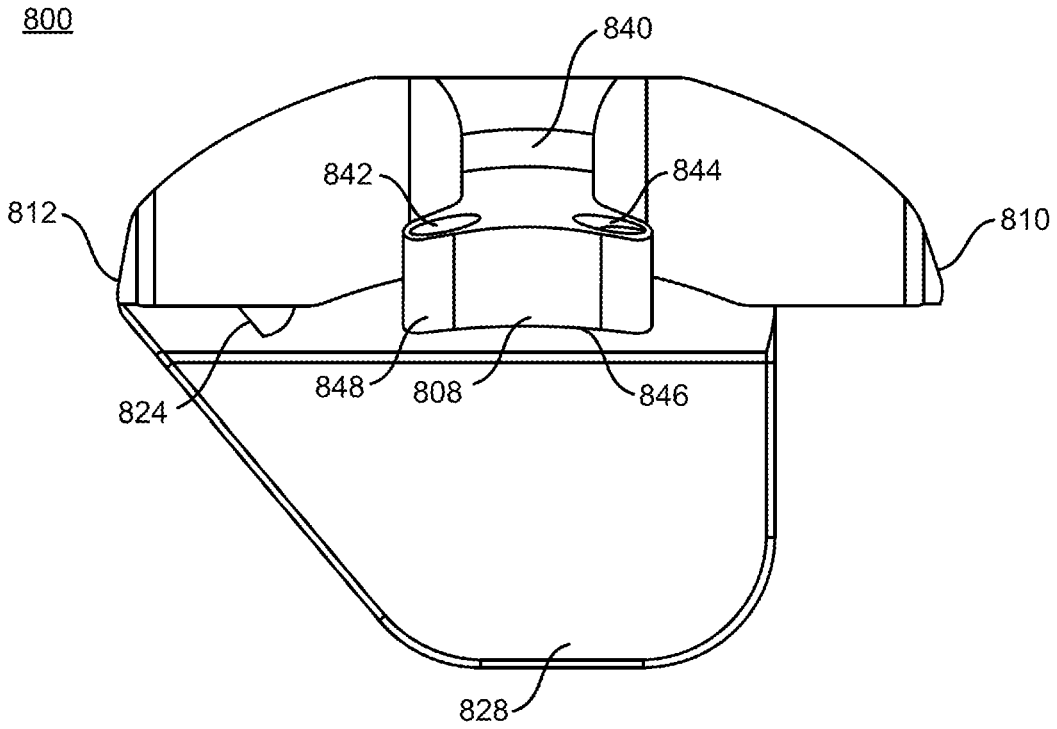
800
840
842
844
812
810
824
848
808
846
828

FIG. 89

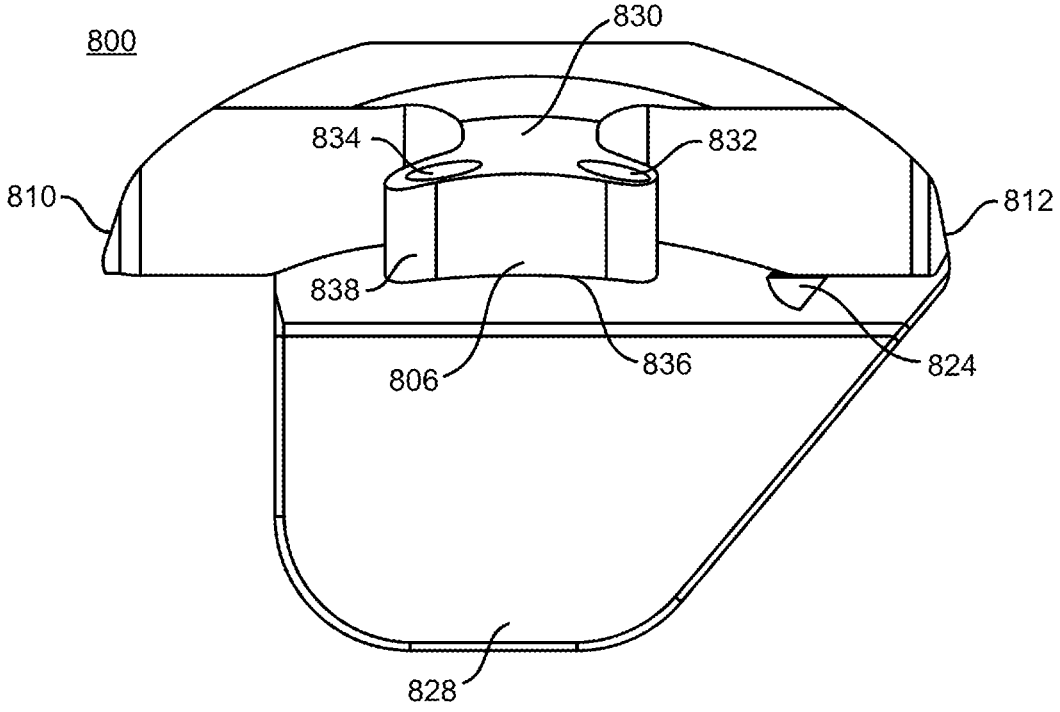
800
830
834
832
810
812
838
806
836
824
828

FIG. 90

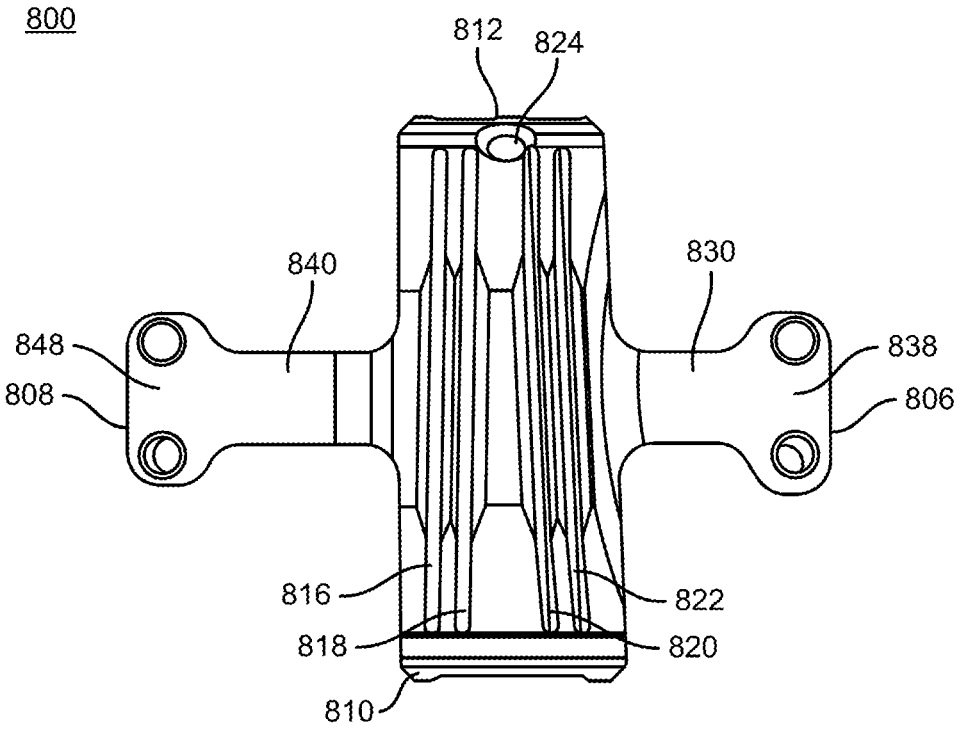
800
812
824
840
830
848
838
808
806
816
822
818
820
810

FIG. 91

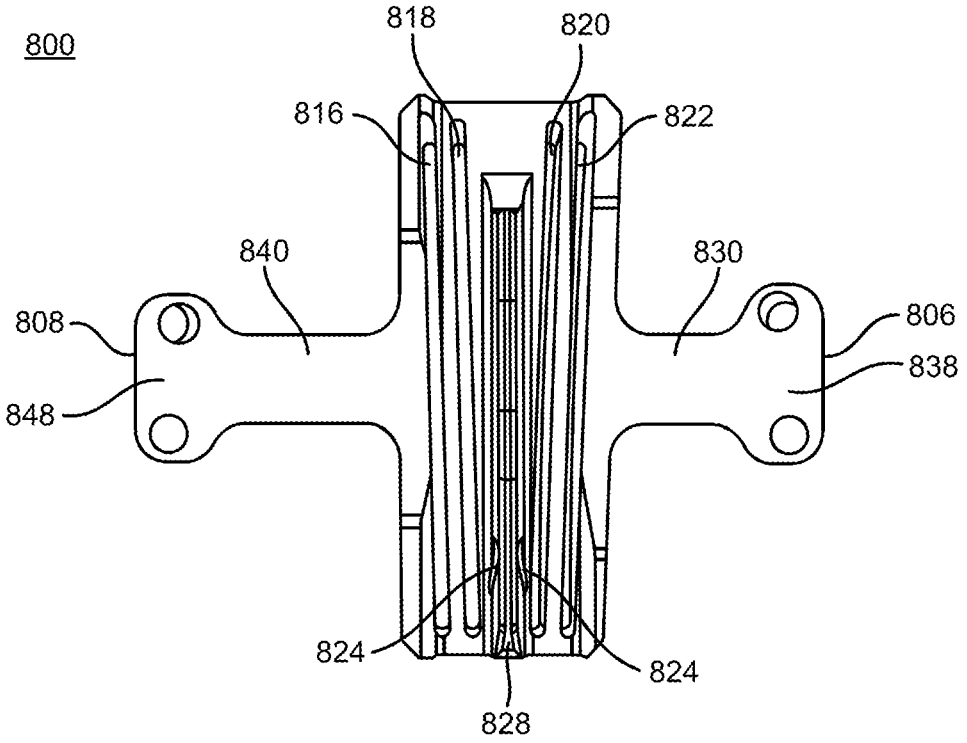
800
818
820
816
822
840
830
808
806
838
848
824
824
828

FIG. 92

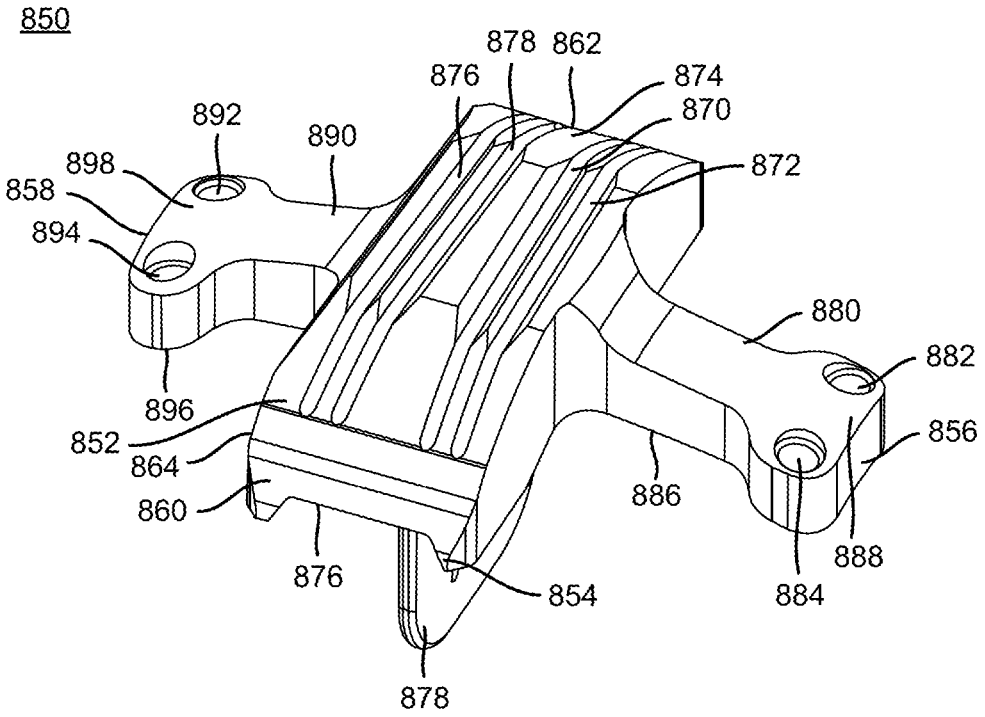
850
878
862
876
874
870
892
890
872
898
858
894
880
882
896
852
856
864
886
860
888
876
854
884
878

FIG. 93

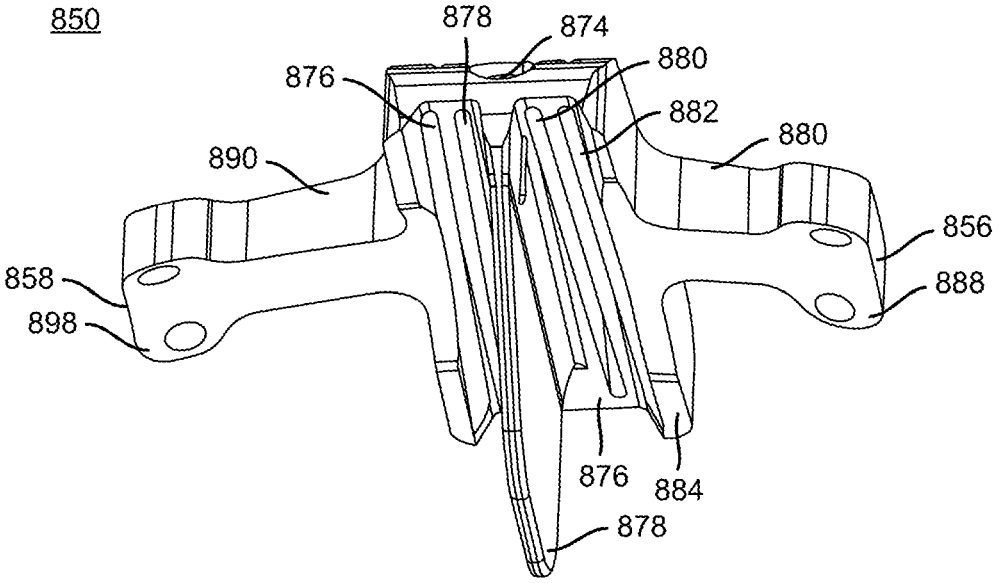
850
878
874
880
876
882
880
890
856
858
888
898
876
884
878

FIG. 94

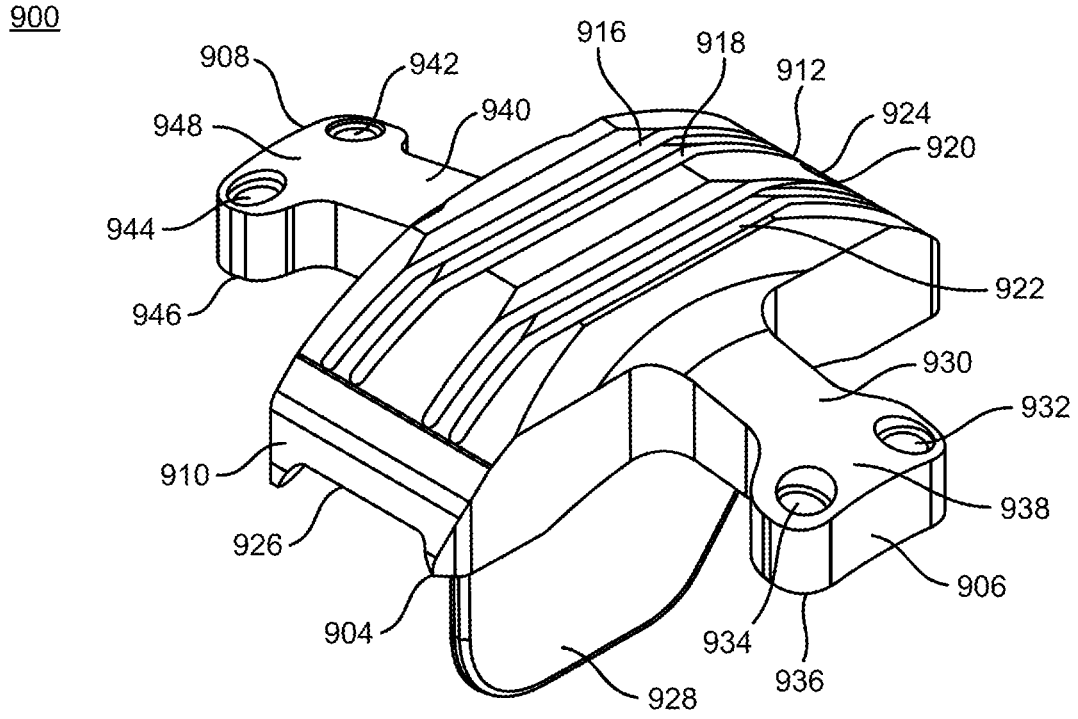
900
908
942
916
918
912
948
940
924
920
944
922
946
930
932
910
938
926
906
904
934
936
928

FIG. 95

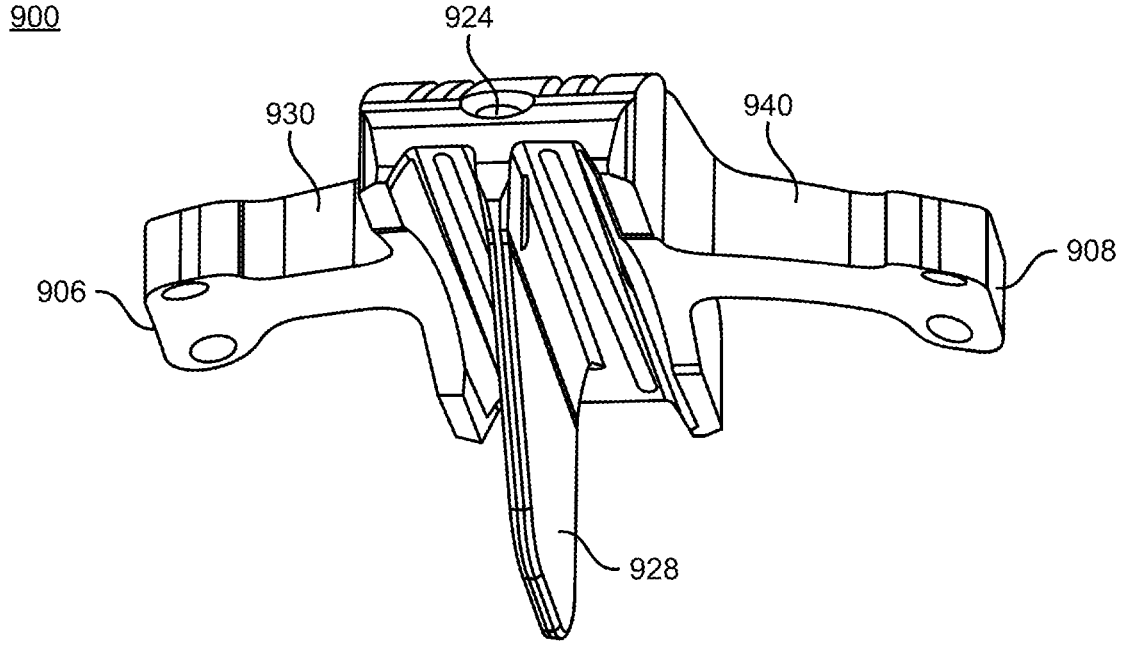
900
924
930
940
908
906
928

FIG. 96

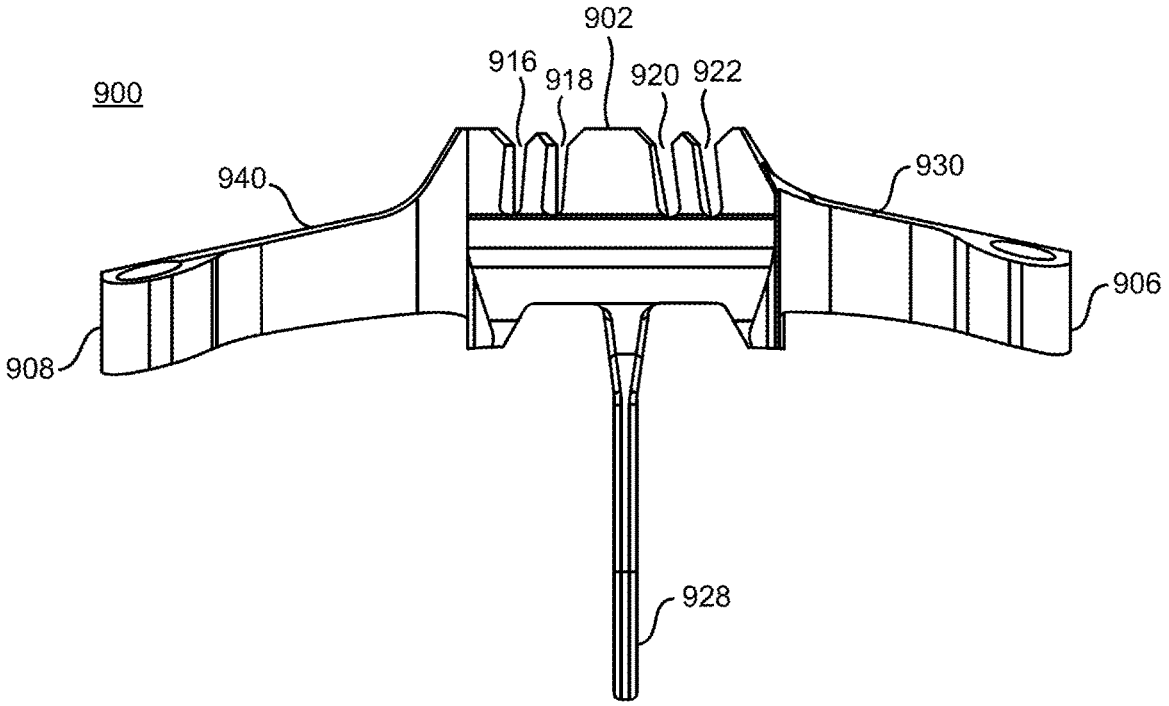
900
902
916
918
920
922
940
930
906
908
928

FIG. 97

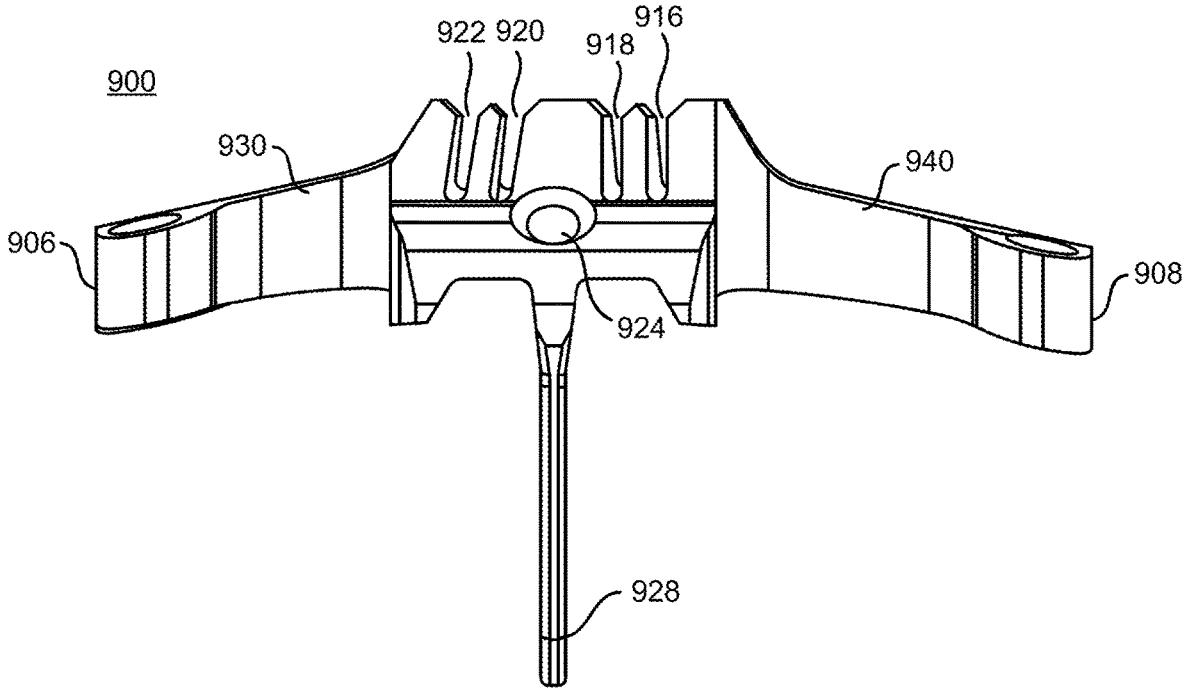
900
922
920
918
916
930
940
906
908
924
928

FIG. 98

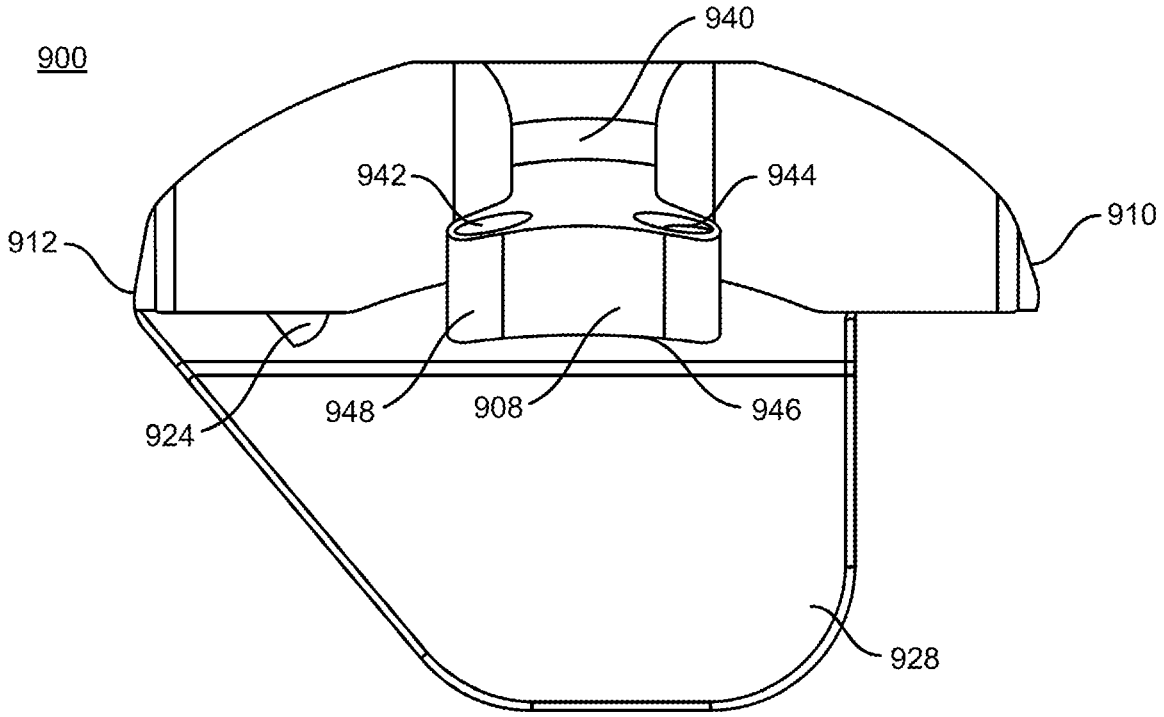

FIG. 99

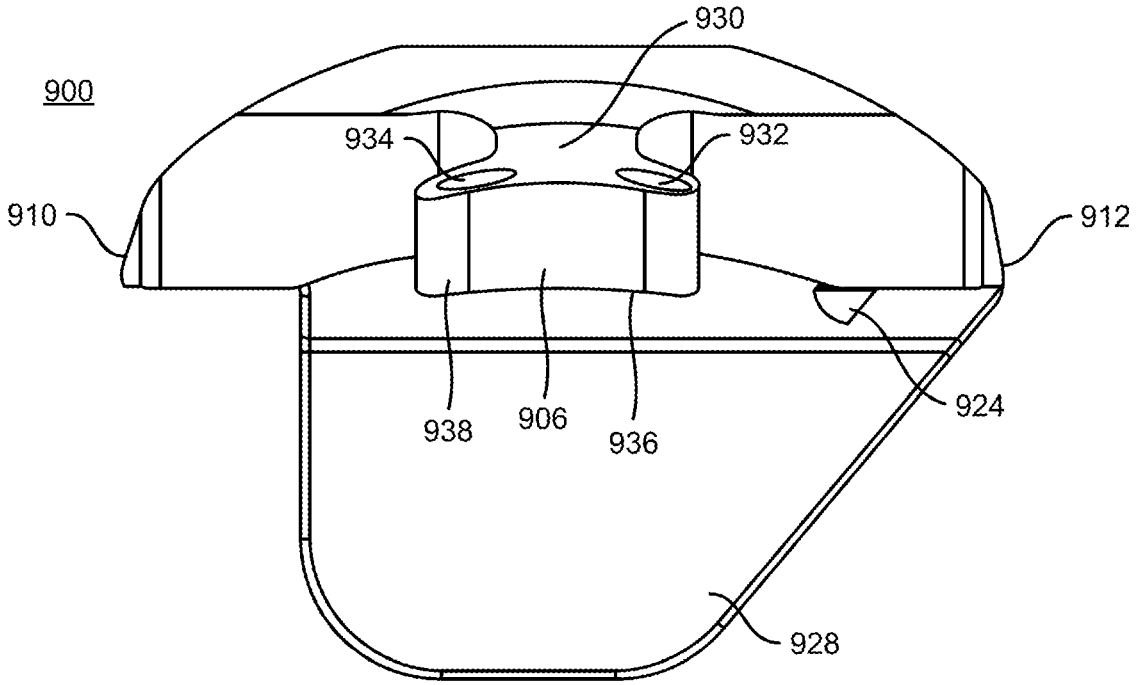

FIG. 100

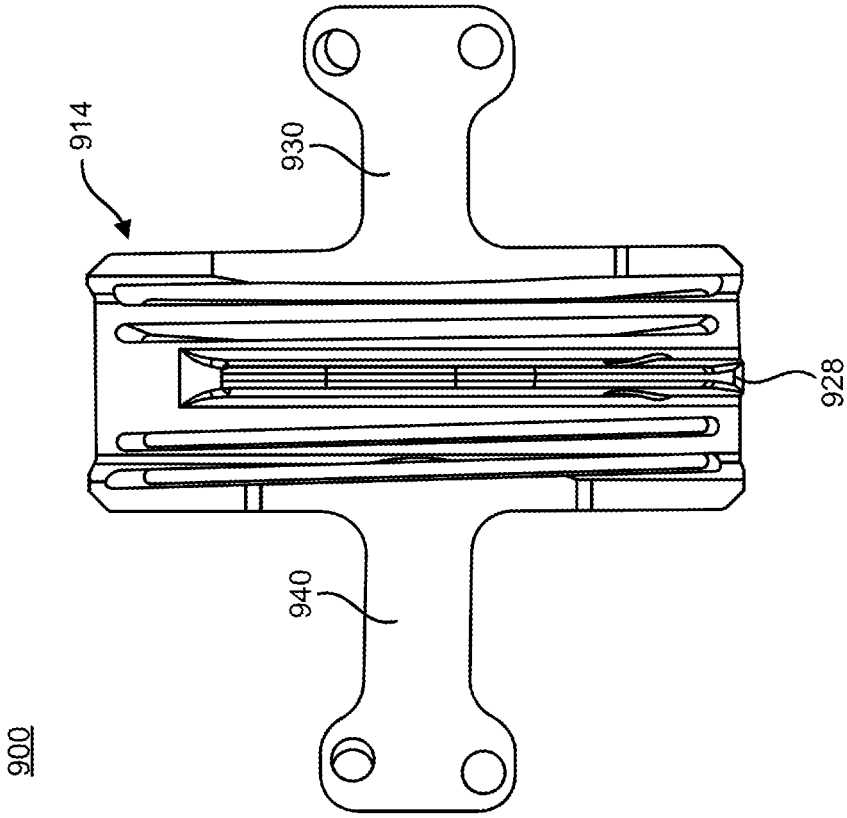

FIG. 102

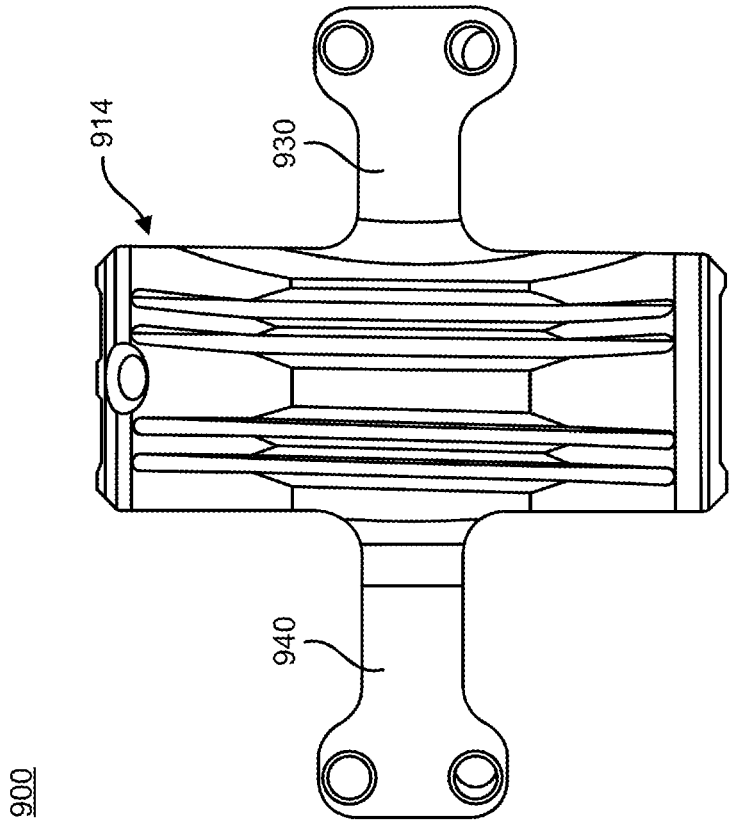

FIG. 101

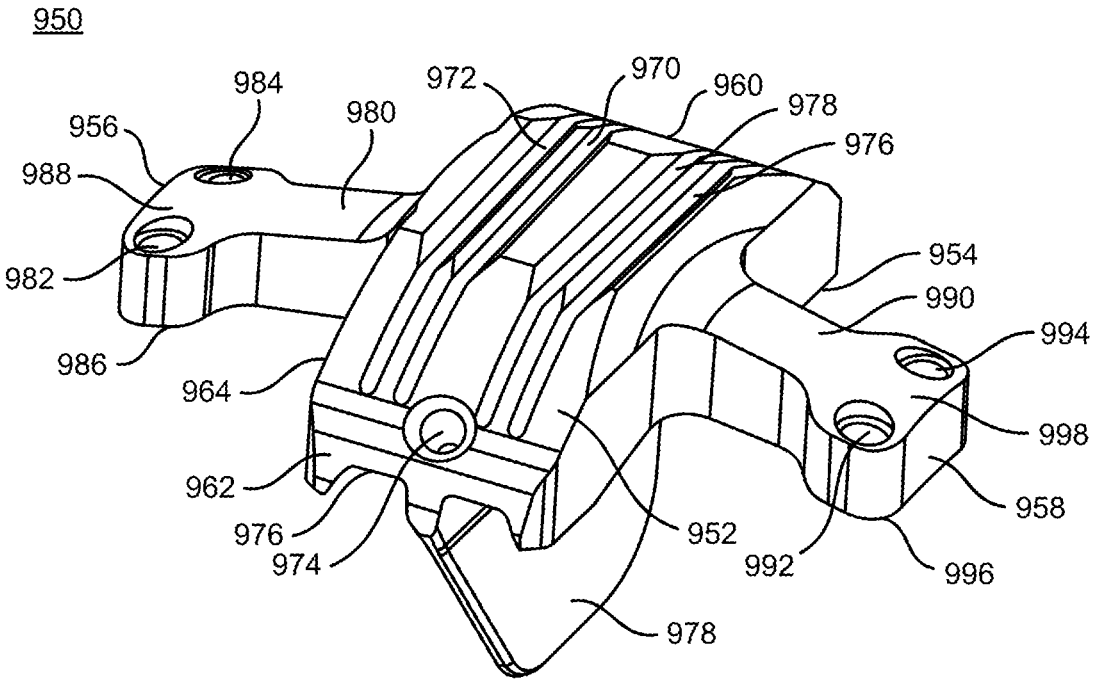

FIG. 103

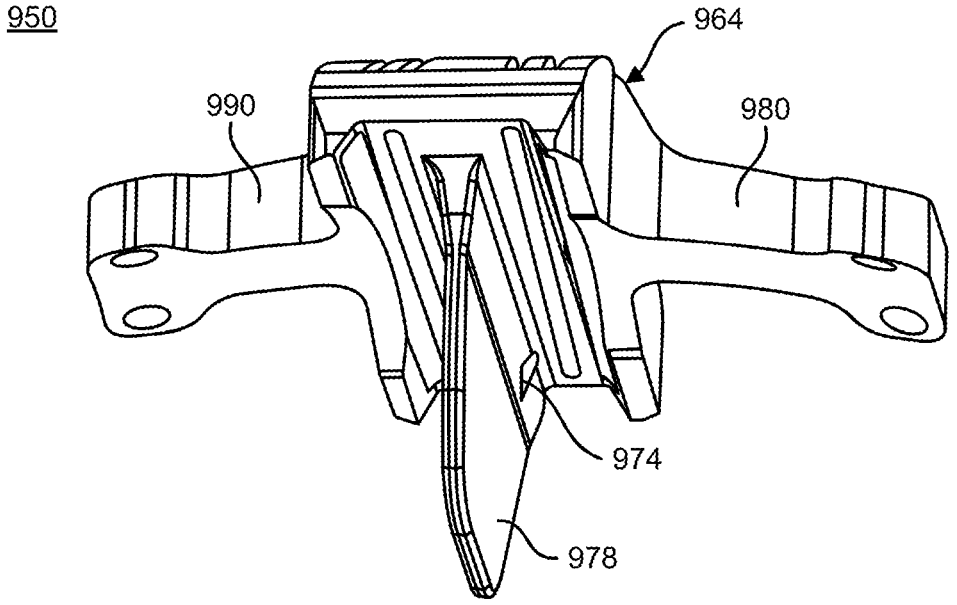

FIG. 104

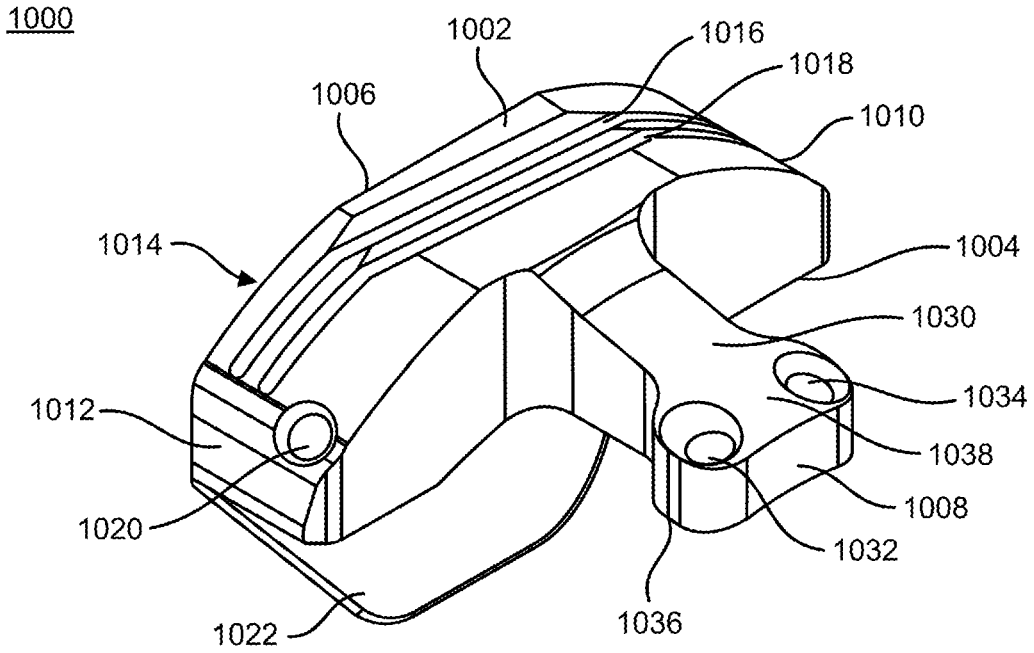

FIG. 105

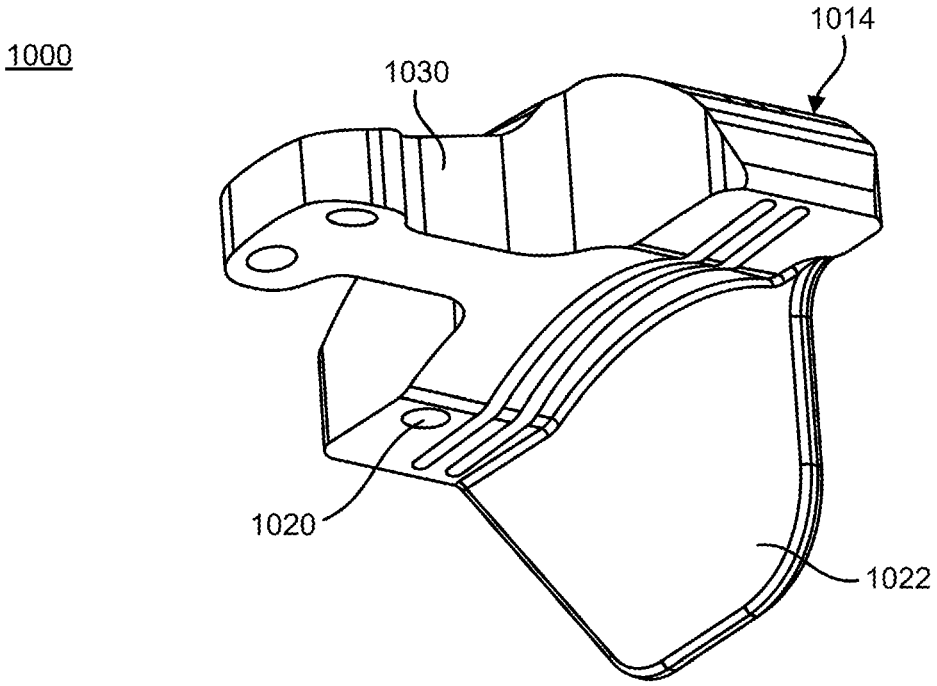

FIG. 106

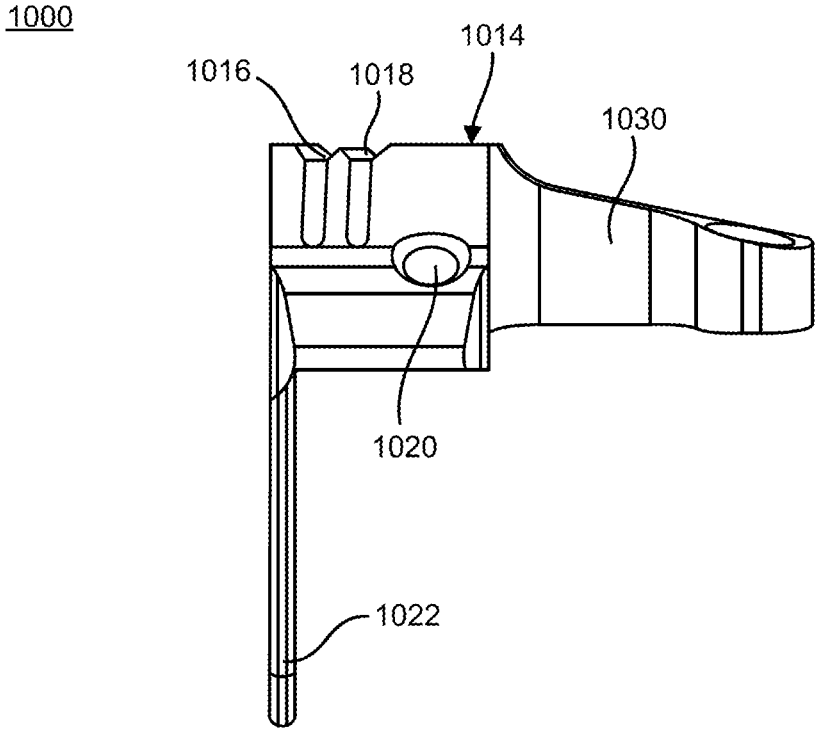

FIG. 107

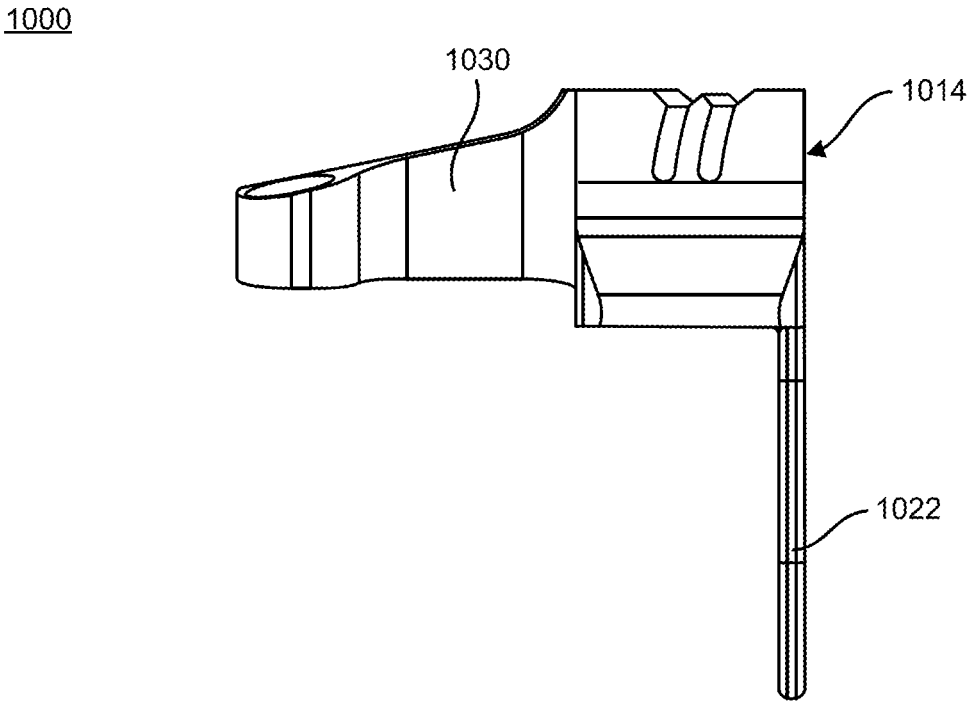

FIG. 108

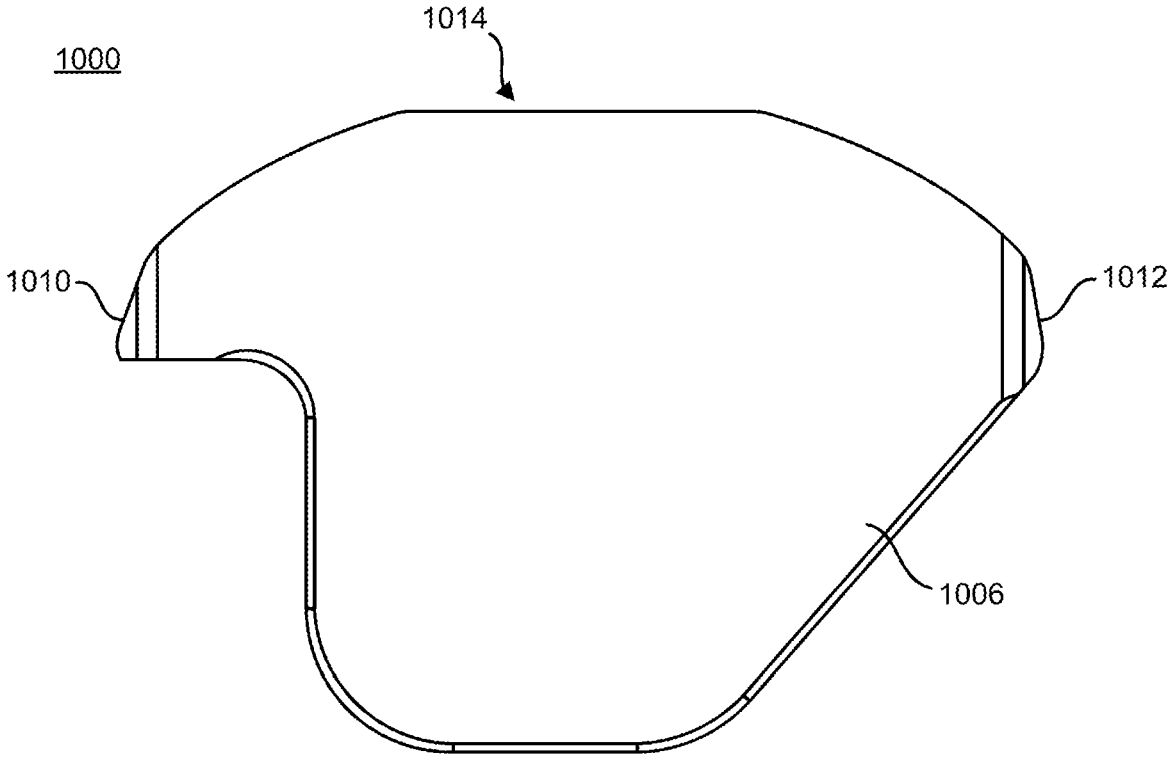

FIG. 109

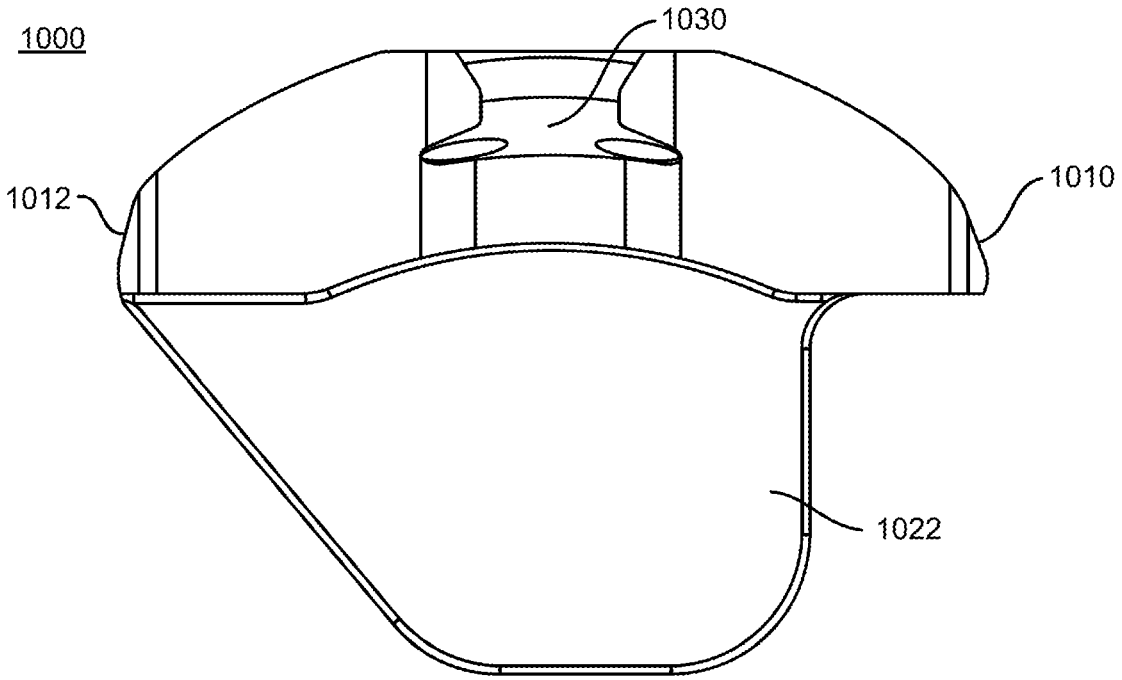

FIG. 110

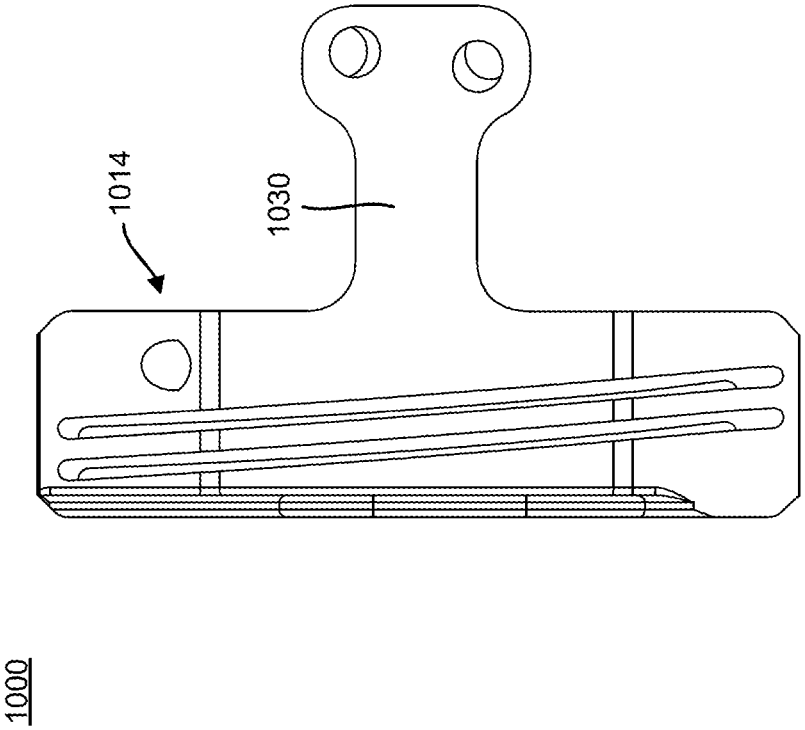

FIG. 112

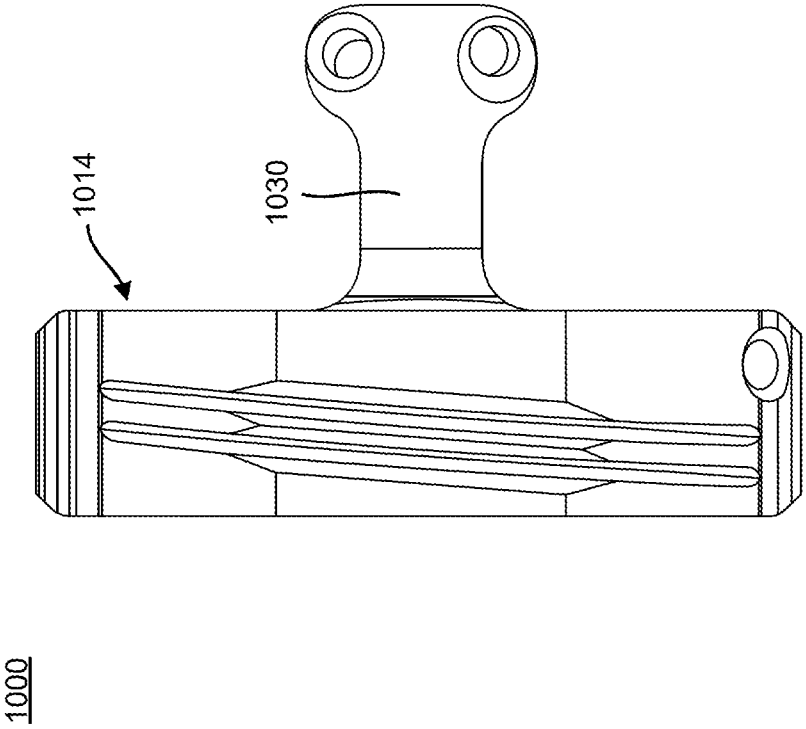

FIG. 111

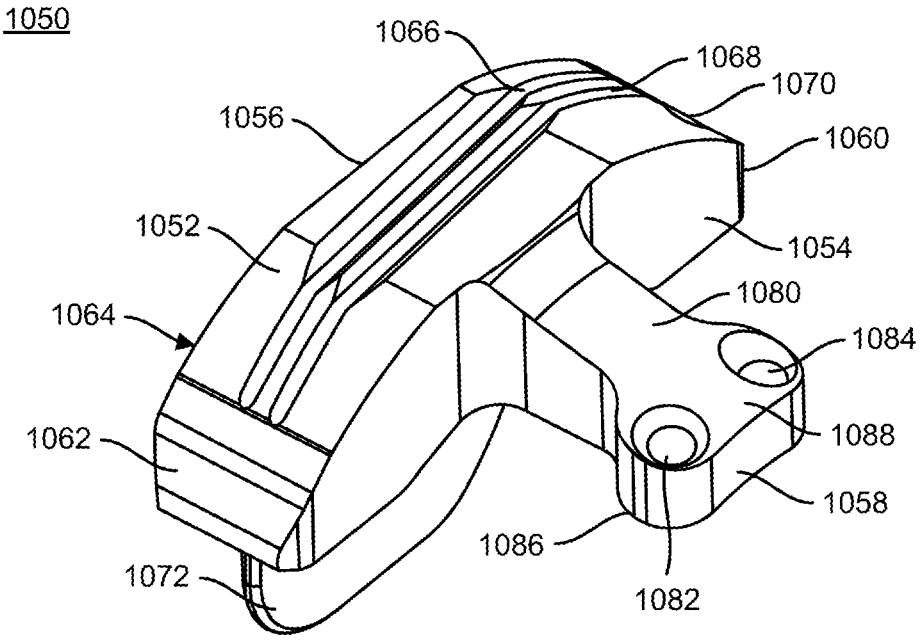

FIG. 113

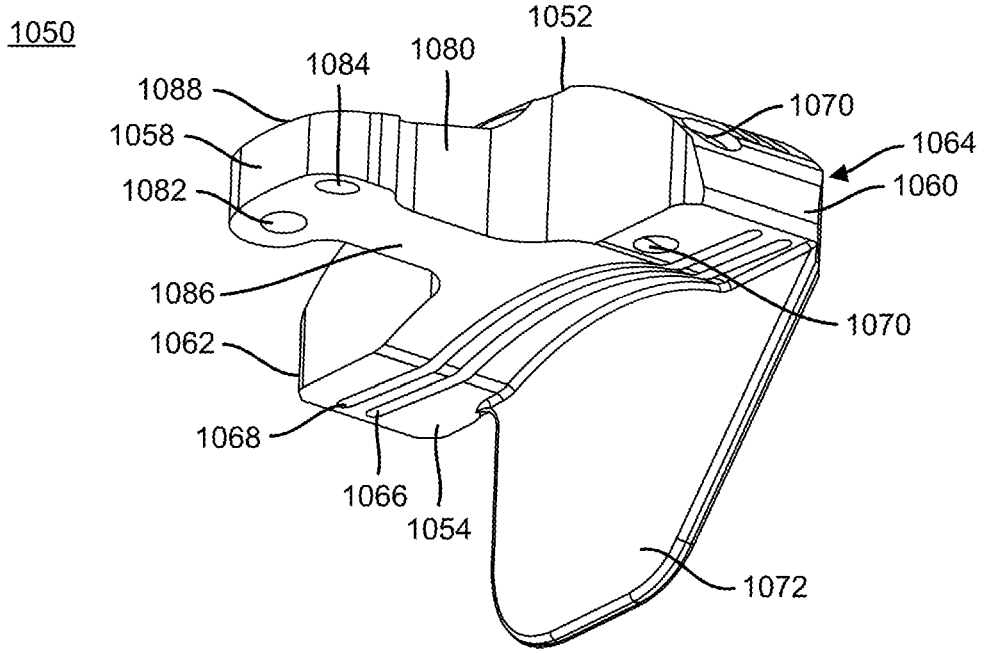

FIG. 114

ALIGNMENT GUIDES, CUT GUIDES, SYSTEMS AND METHODS OF USE AND ASSEMBLY

CROSS REFERENCE TO RELATED APPLICATION

This application is a continuation of PCT/US2018/064368 filed on Dec. 7, 2018 and entitled Alignment Guides, Cut Guides, Systems and Methods of Use and Assembly, which claims priority benefit under 35 U.S.C. § 119(e) of U.S. provisional application No. 62/595,155, filed Dec. 6, 2017 and entitled ALIGNMENT GUIDES, CUT GUIDES, SYSTEMS AND METHODS OF USE AND ASSEMBLY, which are incorporated herein by reference in their entireties.

TECHNICAL FIELD

The present disclosure relates generally to general, podiatric, and orthopaedic surgery related to joint deformities. More specifically, but not exclusively, the present disclosure relates to devices, systems, and methods for maintaining, correcting and/or fusing joint deformities.

BACKGROUND OF THE INVENTION

The Lapidus procedure is commonly used to correct a hallux valgus deformity, which is a lateral deviation of the great toe, with subsequent hypermobility (or laxity). The Lapidus procedure is also commonly used to repair failed surgeries. Typically, a wedge of bone is removed in a biplanar direction at the distal end of the cuneiform, which will provide correction of the deformity and typically results in shortening of the first ray. The result of this shortening is a shift in weight distribution to the second ray, which can result in metatarsalgia. When the first ray is shortened, the function of the patient's sesamoids may also be affected because of the change in weight distribution on the sesamoids. Currently, to avoid shortening of the first ray when doing a Lapidus procedure, the accepted practice is for surgeons to make a straight transverse cut on the metatarsal, then cut only the cartilage or a minimal wedge resection of the cuneiform to obtain realignment of the transverse plane intermetatarsal angle as determined by the surgeon. If shortening beyond an acceptable amount occurs, a bone graft can be used to restore first ray length. Blood supply complications and anatomical height and weight bearing through the joint are all concerns for post-operative healing from a Lapidus procedure.

Accordingly, it is an object of the present invention to overcome one or more of the above-described drawbacks and/or disadvantages of the currently used procedures. For example, in view of the deficiencies of the current implants and methods of performing the Lapidus procedure and fusion of the first tarso-metatarsal joint, and similar implants and surgical methods for other areas of the body where multiple bone structures exist including, but not limited to, the hand, wrist and spine, it would be desirable to develop devices, systems, instrumentation, and methods for maintaining, correcting and/or fusing joint deformities to overcome the above-noted deficiencies of the currently available solutions for addressing joint deformities.

SUMMARY OF THE INVENTION

The present disclosure is directed toward devices, systems and methods for use in maintaining, correcting and/or fusing joint deformities.

In one aspect of the present disclosure provided herein, is a guide system. The guide system including a cut guide, an alignment guide coupled to the cut guide, and a directional wire engaging a portion of the alignment guide.

In another aspect of the present disclosure provided herein, is a cut guide. The cut guide including a base portion, an extension member extending away from a bottom surface of the base portion, and at least one arm extending away from an end of the base portion.

In yet another aspect of the present disclosure provided herein, is an alignment guide. The alignment guide, including a base portion, a first extension member extending away from a bottom surface of the base portion in a first direction, and a second extension member extending away from the bottom surface of the base portion in a second direction.

In a further aspect of the present disclosure provided herein, is a method for using the guide system. The method includes obtaining a cut guide, in which the cut guide includes a base portion, an extension member extending away from a bottom surface of the base portion, and at least one arm extending away from an end of the base portion. The method also includes inserting the extension member into a joint space and coupling the alignment guide to the cut guide. The method further includes inserting a directional wire into at least one opening in the alignment guide and inserting a k-wire into a dorsal hole in the cut guide and checking the orientation of the cut guide. In addition, the method includes inserting at least two wires through the at least one arm of the cut guide and into at least one bone and removing the alignment guide and k-wire. Next, the method includes cutting a first bone and a second bone using at least one slot of the cut guide and removing at least one lateral wire from the at least one bone and the cut guide. Then, the method includes moving the first and second bones to the desired correctional position.

These and other objects, features and advantages of this disclosure will become apparent from the following detailed description of the various aspects of the disclosure taken in conjunction with the accompanying drawings.

BRIEF DESCRIPTION OF THE DRAWINGS

The accompanying drawings, which are incorporated in and constitute a part of the specification, illustrate embodiments of the disclosure and together with the detailed description herein, serve to explain the principles of the disclosure. It is emphasized that, in accordance with the standard practice in the industry, various features are not drawn to scale. In fact, the dimensions of the various features may be arbitrarily increased or reduced for clarity of discussion. The drawings are only for purposes of illustrating preferred embodiments and are not to be construed as limiting the disclosure.

FIG. **1** is a top perspective view of one embodiment of a cut guide, in accordance with an aspect of the present disclosure;

FIG. **2** is a bottom perspective view of the cut guide of FIG. **1**, in accordance with an aspect of the present disclosure;

FIG. **3** is a side view of the cut guide of FIG. **1**, in accordance with an aspect of the present disclosure;

FIG. **4** is another side view of the cut guide of FIG. **1**, in accordance with an aspect of the present disclosure;

FIG. **5** is an end view of the cut guide of FIG. **1**, in accordance with an aspect of the present disclosure;

FIG. **6** is another end view of the cut guide of FIG. **1**, in accordance with an aspect of the present disclosure;

FIG. **7** is a top view of the cut guide of FIG. **1**, in accordance with an aspect of the present disclosure;

FIG. **8** is a bottom view of the cut guide of FIG. **1**, in accordance with an aspect of the present disclosure;

FIG. **9** is a top perspective view of another cut guide, in accordance with an aspect of the present disclosure;

FIG. **10** is a bottom perspective view of the cut guide of FIG. **9**, in accordance with an aspect of the present disclosure;

FIG. **11** is a top perspective view of another cut guide, in accordance with an aspect of the present disclosure;

FIG. **12** is a bottom perspective view of the cut guide of FIG. **11**, in accordance with an aspect of the present disclosure;

FIG. **13** is a side view of the cut guide of FIG. **11**, in accordance with an aspect of the present disclosure;

FIG. **14** is another side view of the cut guide of FIG. **11**, in accordance with an aspect of the present disclosure;

FIG. **15** is an end view of the cut guide of FIG. **11**, in accordance with an aspect of the present disclosure;

FIG. **16** is another end view of the cut guide of FIG. **11**, in accordance with an aspect of the present disclosure;

FIG. **17** is a top view of the cut guide of FIG. **11**, in accordance with an aspect of the present disclosure;

FIG. **18** is a bottom view of the cut guide of FIG. **11**, in accordance with an aspect of the present disclosure;

FIG. **19** is a top perspective view of another cut guide, in accordance with an aspect of the present disclosure;

FIG. **20** is a bottom perspective view of the cut guide of FIG. **19**, in accordance with an aspect of the present disclosure;

FIG. **21** is a side view of the cut guide of FIG. **19**, in accordance with an aspect of the present disclosure;

FIG. **22** is another side view of the cut guide of FIG. **19**, in accordance with an aspect of the present disclosure;

FIG. **23** is an end view of the cut guide of FIG. **19**, in accordance with an aspect of the present disclosure;

FIG. **24** is another end view of the cut guide of FIG. **19**, in accordance with an aspect of the present disclosure;

FIG. **25** is a top view of the cut guide of FIG. **19**, in accordance with an aspect of the present disclosure;

FIG. **26** is a bottom view of the cut guide of FIG. **19**, in accordance with an aspect of the present disclosure;

FIG. **27** is a top perspective view of another cut guide, in accordance with an aspect of the present disclosure;

FIG. **28** is a bottom perspective view of the cut guide of FIG. **27**, in accordance with an aspect of the present disclosure;

FIG. **29** is a side view of the cut guide of FIG. **27**, in accordance with an aspect of the present disclosure;

FIG. **30** is another side view of the cut guide of FIG. **27**, in accordance with an aspect of the present disclosure;

FIG. **31** is an end view of the cut guide of FIG. **27**, in accordance with an aspect of the present disclosure;

FIG. **32** is another end view of the cut guide of FIG. **27**, in accordance with an aspect of the present disclosure;

FIG. **33** is a top view of the cut guide of FIG. **27**, in accordance with an aspect of the present disclosure;

FIG. **34** is a bottom view of the cut guide of FIG. **27**, in accordance with an aspect of the present disclosure;

FIG. **35** is a top perspective view of another cut guide, in accordance with an aspect of the present disclosure;

FIG. **36** is a bottom perspective view of the cut guide of FIG. **35**, in accordance with an aspect of the present disclosure;

FIG. **37** is a top perspective view of another cut guide, in accordance with an aspect of the present disclosure;

FIG. **38** is a bottom perspective view of the cut guide of FIG. **37**, in accordance with an aspect of the present disclosure;

FIG. **39** is a side view of the cut guide of FIG. **37**, in accordance with an aspect of the present disclosure;

FIG. **40** is another side view of the cut guide of FIG. **37**, in accordance with an aspect of the present disclosure;

FIG. **41** is a first end view of the cut guide of FIG. **37**, in accordance with an aspect of the present disclosure;

FIG. **42** is a second end view of the cut guide of FIG. **37**, in accordance with an aspect of the present disclosure;

FIG. **43** is a top view of the cut guide of FIG. **37**, in accordance with an aspect of the present disclosure;

FIG. **44** is a bottom view of the cut guide of FIG. **37**, in accordance with an aspect of the present disclosure;

FIG. **45** is a first side, perspective view of a guide system including an alignment guide and the cut guide of FIG. **1**, in accordance with an aspect of the present disclosure;

FIG. **46** is a first end, perspective view of the guide system of FIG. **45**, in accordance with an aspect of the present disclosure;

FIG. **47** is a first side, perspective view of the alignment guide of FIG. **45**, in accordance with an aspect of the present disclosure;

FIG. **48** is a second side, perspective view of the alignment guide of FIG. **47**, in accordance with an aspect of the present disclosure;

FIG. **49** is a side view of the alignment guide of FIG. **47**, in accordance with an aspect of the present disclosure;

FIG. **50** is an end view of the alignment guide of FIG. **47**, in accordance with an aspect of the present disclosure;

FIG. **51** is a bottom perspective view of the alignment guide of FIG. **47**, in accordance with an aspect of the present disclosure;

FIG. **52** is a top perspective view of the alignment guide of FIG. **47**, in accordance with an aspect of the present disclosure;

FIG. **53** is a side perspective view of the cut guide of FIG. **1** inserted into a foot, in accordance with an aspect of the present disclosure;

FIG. **54** is a bottom, side perspective view of the cut guide and foot of FIG. **53**, in accordance with an aspect of the present disclosure;

FIG. **55** is a side perspective view of the foot and cut guide of FIG. **53** with the alignment guide of FIG. **47** inserted into the cut guide and a directional wire inserted into the alignment guide, in accordance with an aspect of the present disclosure;

FIG. **56** is a top perspective view of FIG. **55**, in accordance with an aspect of the present disclosure;

FIG. **57** is a bottom perspective view of FIGS. **55** and **56** with guide wires inserted through the cut guide into the bones of the foot, in accordance with an aspect of the present disclosure;

FIG. **58** is a side view of FIG. **57**, in accordance with an aspect of the present disclosure;

FIG. **59** is a top view of FIG. **57**, in accordance with an aspect of the present disclosure;

FIG. **60** is a side view of FIGS. **57-59** after removal of the directional wire, the alignment guide, and the lateral guide wire, in accordance with an aspect of the present disclosure;

FIG. **61** is a first end, perspective view of FIG. **60**, in accordance with an aspect of the present disclosure;

FIG. **62** is a perspective, side view of the foot, cut guide and guide wires of FIGS. **60** and **61** with a saw blade inserted into a first slot of the cut guide, in accordance with an aspect of the present disclosure;

FIG. **63** is a side, perspective view of the foot, cut guide, and guide wires of FIG. **62** with the saw blade inserted into a second slot of the cut guide, in accordance with an aspect of the present disclosure;

FIG. **64** is a partially exploded, side perspective view of the foot and two guide wires of FIG. **63** with a position rotation device being inserted onto at least one of the guide wires, in accordance with an aspect of the present disclosure;

FIG. **65** is a front perspective view of the position rotation device, in accordance with an aspect of the present disclosure;

FIG. **66** is a top perspective view of an embodiment of a cut guide system including a transparent cut guide and insertion handle, in accordance with an aspect of the present disclosure;

FIG. **67** is a side view of the cut guide system of FIG. **66**, in accordance with an aspect of the present disclosure;

FIG. **68** is a top view of the cut guide system of FIG. **66**, in accordance with an aspect of the present disclosure;

FIG. **69** is an exploded, first end perspective view of the cut guide system of FIG. **66** with a solid cut guide, in accordance with an aspect of the present disclosure;

FIG. **70** is an exploded, second end perspective view of the cut guide system of FIG. **69**, in accordance with an aspect of the present disclosure;

FIG. **71** is an exploded first end view of the cut guide system of FIG. **69**, in accordance with an aspect of the present disclosure;

FIG. **72** is an exploded second end view of the cut guide system of FIG. **69**, in accordance with an aspect of the present disclosure;

FIG. **73** is a side view of the insertion handle of FIG. **66**, in accordance with an aspect of the present disclosure;

FIG. **74** is a top view of the insertion handle of FIG. **66**, in accordance with an aspect of the present disclosure;

FIG. **75** is a top perspective view of an embodiment of a cut guide, in accordance with an aspect of the present disclosure;

FIG. **76** is a bottom perspective view of the cut guide of FIG. **75**, in accordance with an aspect of the present disclosure;

FIG. **77** is a side view of the cut guide of FIG. **75**, in accordance with an aspect of the present disclosure;

FIG. **78** is another side view of the cut guide of FIG. **75**, in accordance with an aspect of the present disclosure;

FIG. **79** is an end view of the cut guide of FIG. **75**, in accordance with an aspect of the present disclosure;

FIG. **80** is another end view of the cut guide of FIG. **75**, in accordance with an aspect of the present disclosure;

FIG. **81** is a top view of the cut guide of FIG. **75**, in accordance with an aspect of the present disclosure;

FIG. **82** is a bottom view of the cut guide of FIG. **75**, in accordance with an aspect of the present disclosure;

FIG. **83** is a top perspective view of an embodiment of a cut guide, in accordance with an aspect of the present disclosure;

FIG. **84** is a bottom perspective view of the cut guide of FIG. **83**, in accordance with an aspect of the present disclosure;

FIG. **85** is a top perspective view of an embodiment of a cut guide, in accordance with an aspect of the present disclosure;

FIG. **86** is a bottom perspective view of the cut guide of FIG. **85**, in accordance with an aspect of the present disclosure;

FIG. **87** is a side view of the cut guide of FIG. **85**, in accordance with an aspect of the present disclosure;

FIG. **88** is another side view of the cut guide of FIG. **85**, in accordance with an aspect of the present disclosure;

FIG. **89** is an end view of the cut guide of FIG. **85**, in accordance with an aspect of the present disclosure;

FIG. **90** is another end view of the cut guide of FIG. **85**, in accordance with an aspect of the present disclosure;

FIG. **91** is a top view of the cut guide of FIG. **85**, in accordance with an aspect of the present disclosure;

FIG. **92** is a bottom view of the cut guide of FIG. **85**, in accordance with an aspect of the present disclosure;

FIG. **93** is a top perspective view of an embodiment of a cut guide, in accordance with an aspect of the present disclosure;

FIG. **94** is a bottom perspective view of the cut guide of FIG. **93**, in accordance with an aspect of the present disclosure;

FIG. **95** is a top perspective view of an embodiment of a cut guide, in accordance with an aspect of the present disclosure;

FIG. **96** is a bottom perspective view of the cut guide of FIG. **95**, in accordance with an aspect of the present disclosure;

FIG. **97** is a side view of the cut guide of FIG. **95**, in accordance with an aspect of the present disclosure;

FIG. **98** is another side view of the cut guide of FIG. **95**, in accordance with an aspect of the present disclosure;

FIG. **99** is an end view of the cut guide of FIG. **95**, in accordance with an aspect of the present disclosure;

FIG. **100** is another end view of the cut guide of FIG. **95**, in accordance with an aspect of the present disclosure;

FIG. **101** is a top view of the cut guide of FIG. **95**, in accordance with an aspect of the present disclosure;

FIG. **102** is a bottom view of the cut guide of FIG. **95**, in accordance with an aspect of the present disclosure;

FIG. **103** is a top perspective view of an embodiment of a cut guide, in accordance with an aspect of the present disclosure;

FIG. **104** is a bottom perspective view of the cut guide of FIG. **103**, in accordance with an aspect of the present disclosure;

FIG. **105** is a top perspective view of an embodiment of a cut guide, in accordance with an aspect of the present disclosure;

FIG. **106** is a bottom perspective view of the cut guide of FIG. **105**, in accordance with an aspect of the present disclosure;

FIG. **107** is a side view of the cut guide of FIG. **105**, in accordance with an aspect of the present disclosure;

FIG. **108** is another side view of the cut guide of FIG. **105**, in accordance with an aspect of the present disclosure;

FIG. **109** is an end view of the cut guide of FIG. **105**, in accordance with an aspect of the present disclosure;

FIG. **110** is another end view of the cut guide of FIG. **105**, in accordance with an aspect of the present disclosure;

FIG. **111** is a top view of the cut guide of FIG. **105**, in accordance with an aspect of the present disclosure;

FIG. **112** is a bottom view of the cut guide of FIG. **105**, in accordance with an aspect of the present disclosure;

FIG. **113** is a top perspective view of an embodiment of a cut guide, in accordance with an aspect of the present disclosure; and

FIG. **114** is a bottom perspective view of the cut guide of FIG. **113**, in accordance with an aspect of the present disclosure.

DETAILED DESCRIPTION FOR CARRYING OUT THE INVENTION

Generally stated, disclosed herein are devices, systems, and methods for maintaining, correcting and/or fusing joint

deformities. Further, methods for using the devices and systems for maintaining, correcting and/or fusing joint deformities are discussed.

In this detailed description and the following claims, the words proximal, distal, anterior or plantar, posterior or dorsal, medial, lateral, superior and inferior are defined by their standard usage for indicating a particular part or portion of a bone or implant according to the relative disposition of the natural bone or directional terms of reference. For example, "proximal" means the portion of a device or implant nearest the torso, while "distal" indicates the portion of the device or implant farthest from the torso. As for directional terms, "anterior" is a direction towards the front side of the body, "posterior" means a direction towards the back side of the body, "medial" means towards the midline of the body, "lateral" is a direction towards the sides or away from the midline of the body, "superior" means a direction above and "inferior" means a direction below another object or structure. Further, specifically in regards to the foot, the term "dorsal" refers to the top of the foot and the term "plantar" refers the bottom of the foot.

Similarly, positions or directions may be used herein with reference to anatomical structures or surfaces. For example, as the current devices, systems, instrumentation and methods are described herein with reference to use with the bones of the foot, the bones of the foot, ankle and lower leg may be used to describe the surfaces, positions, directions or orientations of the devices, systems, instrumentation and methods. Further, the devices, systems, instrumentation and methods, and the aspects, components, features and the like thereof, disclosed herein are described with respect to one side of the body for brevity purposes. However, as the human body is relatively symmetrical or mirrored about a line of symmetry (midline), it is hereby expressly contemplated that the devices, systems, instrumentation and methods, and the aspects, components, features and the like thereof, described and/or illustrated herein may be changed, varied, modified, reconfigured or otherwise altered for use or association with another side of the body for a same or similar purpose without departing from the spirit and scope of the disclosure. For example, the devices, systems, instrumentation and methods, and the aspects, components, features and the like thereof, described herein with respect to the right foot may be mirrored so that they likewise function with the left foot. Further, the devices, systems, instrumentation and methods, and the aspects, components, features and the like thereof, disclosed herein are described with respect to the foot for brevity purposes, but it should be understood that the devices, systems, instrumentation and methods may be used with other bones of the body having similar structures.

Referring to the drawings, wherein like reference numerals are used to indicate like or analogous components throughout the several views, and with particular reference to FIGS. **1-8**, there is illustrated a cut guide **100**. The cut guide **100** includes a top surface **102**, a bottom surface **104**, a first or proximal end **106**, a second or distal end **108**, a first or medial side **110**, and a second or lateral side **112**. The cut guide **100** also includes a base portion **114** and a paddle, fin or extension member **128** extending away from the bottom surface **104** of the base portion **114**. The cut guide **100** further includes a first or proximal arm **130** extending away from the base portion **114** on a first end **106** and a second or distal arm **140** extending away from the base portion **114** on a second end **108**. The cut guide **100** may be, for example, a right foot cut guide.

As shown in FIGS. **1**, **5** and **6**, the top surface **102** of the base portion **114** may be, for example, curved or arced between the first side **110** and the second side **112**. In one embodiment, the top surface **102** of the base portion **114** may include, for example, a flat or planar portion positioned between a first curvature or arc extending from the first side **110** to the flat portion and a second curvature or arc extending from a second side **112** to the flat portion. The base portion **114** also includes at least one slot **116**, **118**, **120**, **122**, as shown in FIGS. **1-4**, **7** and **8**. In the depicted embodiment, the base portion **114** includes a first slot **116** adjacent to a second slot **118** and a third slot **120** adjacent to a fourth slot **122**. The first and second slots **116**, **118** may be, for example, positioned on the second end **108** of the base portion **114** and the third and fourth slots **120**, **122** may be, for example, positioned on the first end **106** of the base portion **114**.

With continued reference to FIGS. **1-4** and **7**, the slots **116**, **118**, **120**, **122** may extend, for example, linearly through the base portion **114** from the top surface **102** to the bottom surface **104** of the cut guide **100**. Alternatively, the slots **116**, **118**, **120**, **122** may also be, for example, angled as the slots **116**, **118**, **120**, **122** extend from the top surface **102** to the bottom surface **104**. The slots **116**, **118**, **120**, **122** may be angled, for example, approximately 1° to 4° and more specifically, approximately 2°, as they extend between the top surface **102** and the bottom surface **104**. It is also contemplated that some of slots **116**, **118**, **120**, **122** may be angled and other slots **116**, **118**, **120**, **122** may be linear as they extend through the base portion **114** from the top surface **102** to the bottom surface **104**.

In addition, the slots **116**, **118**, **120**, **122** may be angled as they extend between the first side **110** and the second side **112**, for example, the slots may be angled approximately 0° to 30° as the slots **116**, **118**, **120**, **122** extend between the first and second sides **110**, **112**. As shown, slots **116**, **118**, **120**, **122** have an angle of 0° as the slots **116**, **118**, **120**, **122** extend between the first and second sides **110**, **112**. Although not shown with respect to cut guide **100**, it is also contemplated that a first set of slots **116**, **118** may be angled as they extend between the first and second sides **110**, **112** and the second set of slots **120**, **122** may be straight, and vice versa. As shown, the slots **120**, **122** are positioned to extend between the first and second sides **110**, **112** parallel to the first metatarsal, as discussed in greater detail below with respect to the method of using the cut guide **100**. The slots **116**, **118**, **120**, **122** may be configured or sized and shaped to receive a saw blade and may have a width of, for example, approximately 0.58 mm to 0.92 mm. The slots **116**, **118**, **120**, **122** may be positioned, for example, to allow for removal of the articular cartilage layer of the two bones. To prevent resecting more bone than absolutely necessary, the slots **116**, **118**, **120**, **122** may be positioned, for example, such that the medial portion of the slots **116**, **118**, **120**, **122** are aligned with the intersection of the cartilage and bone. In one embodiment, the slots **116**, **118** are positioned a first distance from the extension member **128**, the slots **120**, **122** are positioned a second distance from the extension member **128**, and the first distance is smaller than the second distance. The first distance may be measured from the extension member **128** to an inner surface of the slots **116**, **118** and the second distance may be measured from the extension member **128** to an inner surface of the slots **120**, **122**.

The base portion **114** may also include a hole or dorsal hole **124**, as shown in at least FIGS. **4**, **7** and **8**. The hole **124** is positioned between the second slot **118** and the third slot **120** near the second side **112** of the base portion **114**. The

hole **124** may extend, for example, into the base portion **114** from the top surface **102** of the cut guide **100** and to a point within the extension member **128**. As shown in FIGS. **2** and **8**, as the hole **124** extends into the extension member **128**, the hole **124** forms a through hole in a proximal-distal direction through the extension member **128**. The hole **124** may, for example, extend into the cut guide **100** parallel to the angled portion of the extension member **128**, as shown in FIG. **2**. The hole **124** may be sized and shaped or configured, for example, to receive a wire, alignment wire, k-wire, guide wire or the like to provide information on the position of the cut guide **100** in a joint. For example, the wire inserted into hole **124** should align approximately with the long axis of the tibia to provide the proper orientation of the cut guide **100** in the joint, which may be, for example, approximately 45° from dorsal and 45° from medial.

Referring now to FIGS. **1-4** and **8**, the base portion **114** also includes a recessed region **126** positioned on the bottom surface **104**. The recessed region **126** extends from the first side **110** to the second side **112** and into the base portion **114** a first distance from the bottom surface **104** toward the top surface **102**. The extension member **128** is coupled to the recessed region **126** of the base portion **114** and extends away from the recessed region **126** of the base portion **114**. In addition, the extension member **128** is positioned between the second slot **118** and the third slot **120** and also extends from the second side **112** toward the first side **110**, as shown in FIGS. **5**, **6** and **8**. The extension member **128** may be shaped, for example, to fit within the joint space between two bones, such as, a first metatarsal and cuneiform, as well as to make contact with the adjoining articular joint surfaces. The extension member **128** may include a perpendicular portion near the first side **110** that extends perpendicularly away from the bottom surface **104**. The perpendicular portion of the extension member **128** may be, for example, angled when the cut guide **100** is inserted into a patient's joint and the angle that the perpendicular portion is positioned at may correspond to the angle of the first tarso-metatarsal joint medially. The extension member **128** may also include an angled portion extending from the second side **112** to the end of the extension member **128**. The angled portion of the extension member **128** may, for example, allow for the extension member **128** to fit within a variety of anatomic presentations. The angled portion of the extension member **128** may, for example, be oriented laterally and should align with the long axis of the tibia, as well as fit within the joint to rest against the relatively straight surface of the adjacent bone, for example, the second metatarsal. When the angled portion of the extension member **128** is oriented against the second metatarsal, the cut guide **100** will be positioned at a 45° angle in the frontal plane.

As shown in FIGS. **1**, **2**, **7** and **8**, the first or proximal arm **130** may extend away from an end of the base portion **114** and may be, for example, tapered from the base portion **114** to the first end **106** of the cut guide **100**. The first arm **130** includes at least one opening **132**, **134**. In the depicted embodiment, the first arm **130** includes a first opening **132** and a second opening **134** positioned near the first end **106**. The first opening **132** may be spaced apart from the second opening **134**. The openings **132**, **134** may extend from a top surface **102** to a bottom surface **104** of the cut guide **100**. The openings **132**, **134** may extend through the first arm **130**, for example, parallel to the extension member **128**, angled as they extend from the top surface **102** toward the bottom surface **104**, or a combination of parallel and angled. In one embodiment, the first opening **132** may extend, for example, parallel to the extension member **128** and the second opening **134** may be, for example, angled with respect to the extension member **128** to permit the inserted wires, guide wires, k-wires and the like to cross above the cut guide **100** without intersecting. By positioning the openings **132**, **134** such that inserted wires cross above the openings **132**, **134** allows for a smaller surgical incision and less interaction or interference with other instruments during the procedure. The openings **132**, **134** positioning the wires to cross also allows for the cut guide **100** to be, for example, suspended above and/or proximate to the bone surfaces being cut. The ability to suspend the cut guide **100** above the bone surfaces prevents the cut guide **100** from being titled because of varying patient anatomy and this avoids moving the slots **116**, **118**, **120**, **122** which would affect the proposed cut angles. Alternative combinations of orientations of the openings **132**, **134** are also contemplated, as would be understood by one of ordinary skill in the art from the above description. The first arm **130** may be shaped to provide a bone contacting surface **136** that corresponds to the shape of the bone that it will engage. The first arm **130** may be, for example, curved or arced as it extends between the first side **110** and the second side **112**.

As shown in FIGS. **1**, **2**, **7** and **8**, the second or distal arm **140** may extend away from an end of the base portion **114** and may be, for example, tapered from the base portion **114** to the second end **108** of the cut guide **100**. The second arm **140** includes at least one opening **142**, **144**. In the depicted embodiment, the second arm **140** includes a third opening **142** and a fourth opening **144** positioned near the second end **108**. The third opening **142** may be spaced apart from the fourth opening **144** and extend from a top surface **102** to a bottom surface **104** of the cut guide **100**. The openings **142**, **144** may extend through the second arm **140**, for example, parallel to the extension member **128**, angled as they extend from the top surface **102** toward the bottom surface **104**, or a combination of parallel and angled. In one embodiment, the third opening **142** may extend, for example, parallel to the extension member **128** and the fourth opening **144** may be, for example, angled with respect to the extension member **128** to permit inserted wires, guide wires, k-wires, and the like to cross above the cut guide **100** without intersecting. By positioning the openings **142**, **144** such that the inserted wires cross above the openings **142**, **144** allows for a smaller surgical incision and less interaction or interference with other instruments during the procedure. The openings **142**, **144** being positioned for the wires to cross, also allows for the cut guide **100** to be, for example, suspended above and/or mated with the bone surfaces being cut. Suspending the cut guide **100** above the bone surfaces prevents the cut guide **100** from being angled because of varying patient anatomy which results in not having to move the slots **116**, **118**, **120**, **122** which would affect the proposed cut angles. In one embodiment, the openings **132**, **142** may be, for example, positioned such that they are parallel to one another as they extend between the top and bottom surfaces **102**, **104**. By positioning the openings **132**, **142** parallel to each other, the cut guide **100** may be, for example, removed from guide wires inserted through openings **132**, **142** without removing the guide wires. In addition, parallel openings **132**, **142** allow for the relative rotation between the two guide wires to be measured or calculated after the bones are cut using cut guide **100**. Further, the openings **132**, **142** may be, for example, spaced apart from the extension member **128** a standard or set distance to allow for interchangeability with alternative cut guides **200**, **250**, **300**, **400**, if a different or additional resection is needed. Alternative, combinations of orientations of the openings **142**, **144** are also contem-

plated, as would be understood by one of ordinary skill in the art from the above description. The second arm **140** may be shaped to provide a bone contacting surface **146** that corresponds to the shape of the bone that it will engage. The second arm **140** may be, for example, curved or arced as it extends between the first side **110** and the second side **112**. The second arm **140** may have, for example, a larger length and width than the first arm **130**.

Referring now to FIGS. **9** and **10**, another cut guide **150** is shown. The cut guide **150** is a mirror image of the cut guide **100** in a medial-lateral direction, which will not be described again in full detail for brevity purposes. For example, the hole **124** is positioned on a left side of the cut guide **100** when in an insertion position and the hole **174** is positioned on a right side of the cut guide **150** when in an insertion position. The cut guide **150** may be, for example, for a left foot. The cut guide **150** may include a top surface **152**, a bottom surface **154**, a first or proximal end **156**, a second or distal end **158**, a first or medial side **160**, and a second or lateral side **162**, which may be of the type described above with respect to the top surface **102**, the bottom surface **104**, the first or proximal end **106**, the second or distal end **108**, the first or medial side **110**, and the second or lateral side **112**, respectively. The cut guide **150** may also include a base portion **164** which may be the mirror image of the base portion **114**, as described above. The slots **166**, **168**, **170**, **172**, the hole **174**, and the recessed region **176** may be similar to the slots **116**, **118**, **120**, **122**, hole **124**, and recessed region **126**, as described in greater detail above. Further, the cut guide **150** may include a fin, paddle or extension member **178**, a first or proximal arm **180**, and a second or distal arm **190**, which may be as described above with respect to the extension member **128**, the first arm **130**, and the second arm **140**, respectively. The openings **182**, **184** and the bone contacting surface **186** may be as described above with reference to openings **132**, **134** and bone contacting surface **136** and the openings **192**, **194** and the bone contacting surface **196** may be as described above with reference to openings **142**, **144** and the bone contacting surface **146**, which will not be described again here for brevity purposes.

Another cut guide **200** is shown in FIGS. **11-18**. The cut guide **200** includes a top surface **202**, a bottom surface **204**, a first or proximal end **206**, a second or distal end **208**, a first or medial side **210**, and a second or lateral side **212**. The top surface **202** may be, for example, wider than the top surface **102** of cut guide **100** providing for larger angular corrections. The cut guide **200** also includes a base portion **214**, a paddle, fin or extension member **228** extending away from the bottom surface **204** of the base portion **214**, a first or proximal arm **230** extending away from the base portion **214** on the first end **206**, and a second or distal arm **240** extending away from the base portion **214** on the second end **208**. The cut guide **200** may be, for example, a right foot cut guide. A mirror image of the cut guide **200** for, for example, a left foot is also contemplated. The cut guide **200** may provide, for example, for transverse plane correction angles of approximately 16°, 18° and 20°, although alternative angles of correction are also contemplated.

As shown in FIGS. **11**, **15** and **16**, the top surface **202** of the base portion **214** may be, for example, curved or arced between the first side **210** and the second side **212**. In one embodiment, the top surface **202** of the base portion **214** may include, for example, a flat or planar portion positioned between a first curvature or arc extending from the first side **210** to the flat portion and a second curvature or arc extending from a second side **212** to the flat portion. The end of the base portion **214** near the first end **206** of the cut guide **200** may be, for example, angled from the second side **212** to the first side **210**, as shown in FIG. **17**. The end of the base portion **214** near the second end **208** of the cut guide **200** may extend, for example, perpendicularly between the first side **210** and the second side **212**, as shown in FIG. **17**.

The base portion **214** also includes at least one slot **216**, **218**, **220**, **222**, as shown in FIGS. **11-14**, **17** and **18**. In the depicted embodiment, the base portion **214** includes a first slot **216** adjacent to a second slot **218** and a third slot **220** adjacent to a fourth slot **222**. The first and second slots **216**, **218** are positioned on the base portion **214** near the second end **208** of the cut guide **200** and the third and fourth slots **220**, **222** are positioned on the base portion **214** near the first end **206** of the cut guide **200**. The slots **216**, **218**, **220**, **222** may extend, for example, linearly or angled through the base portion **214** from the top surface **202** to the bottom surface **204** of the cut guide **200**. The slots **216**, **218**, **220**, **222** may be, for example, angled approximately 1° to 4° and more specifically, approximately 2°, as the slots **216**, **218**, **220**, **222** extend between the top and bottom surfaces **202**, **204**. It is also contemplated that some of slots **216**, **218**, **220**, **222** may be angled and other slots **216**, **218**, **220**, **222** may be linear as they extend through the base portion **214** from the top surface **202** to the bottom surface **204**.

In addition, the slots **216**, **218** may be oriented, for example, relatively perpendicular to the first side **210** and the second side **212** as the slots **216**, **218** extend from the first side **210** to the second side **212**, as shown in FIGS. **11-14**, **17** and **18**. The slots **220**, **222** may be, for example, angled as the slots **220**, **222** extend between the second side **212** and the first side **210**. The slots **220**, **222** may also be, for example, angled toward the slots **216**, **218**, as the slots **220**, **222** extend from the second side **212** to the first side **210**. The slots **220**, **222** may also be positioned to extend parallel to the end of the base portion **214** near the second end **208** of the cut guide **200**. The slots **220**, **222** may be, for example, angled between approximately 2° and 30°, and more specifically between approximately 8° and 22° as the slots **220**, **222** extend from the second side **212** to the first side **210** providing for an angulation correction of 8° to 22° in the transverse plane. The slots **216**, **218**, **220**, **222** may be configured or sized and shaped to receive a saw blade and may have a width of, for example, approximately 0.58 mm to 0.92 mm. The slots **216**, **218**, **220**, **222** may be positioned, for example, to allow for removal of the articular cartilage layer at the ends of the two bones. To prevent resecting more tissue than absolutely necessary, the slots **216**, **218**, **220**, **222** may be positioned, for example, such that the medial portion of the slots **216**, **218**, **220**, **222** are aligned with the intersection of the cartilage and bone.

The base portion **214** may also include a hole or dorsal hole **224**, as shown in at least FIGS. **12**, **13**, **17** and **18**. The hole **224** is positioned between the second slot **218** and the third slot **220** near the second side **212** of the base portion **214**. The hole **224** may extend, for example, into the base portion **214** from the top surface **202** of the cut guide **200** and to a point within the extension member **228**. As shown in FIGS. **12**, **15**, **16** and **18**, as the hole **224** extends into the extension member **228**, the hole **224** forms an opening in a proximal-distal direction through the extension member **228**. The hole **224** may, for example, extend into the cut guide **200** parallel to the angled portion of the extension member **228**, as shown in FIG. **12**. The hole **224** may be sized and shaped or configured, for example, to receive a wire, alignment wire, k-wire, guide wire or the like to provide information on the position of the cut guide **200** in

a joint. For example, a wire inserted into hole **224** should align approximately with the long axis of the patient's tibia to provide the proper orientation of the cut guide **200** in the joint, which may be, for example, approximately 45° from dorsal and 45° from medial in the frontal plane.

Referring now to FIGS. **11-14** and **18**, the base portion **214** also includes a recessed region **226** positioned on the bottom surface **204**. The recessed region **226** extends from the first side **210** to the second side **212** and into the base portion **214** from the bottom surface **204** toward the top surface **202**. The recessed region **226** extends to engage the bone contacting surface **236** of the first arm **230** at the first side **210** of the base portion **214**. The extension member **228** is coupled to the recessed region **226** of the base portion **214** and extends away from the recessed region **226** of the base portion **214**. In addition, the extension member **228** is positioned between the second slot **218** and the third slot **220**. The extension member **228** also extends from the second side **212** toward the first side **210**, as shown in FIGS. **12**, **15**, **16** and **18**. The extension member **228** may include a perpendicular portion near the first side **210** that extends perpendicularly away from the bottom surface **204**. The perpendicular portion of the extension member **128** may be, for example, angled when the cut guide **200** is inserted into a patient's joint and the angle that the perpendicular portion is positioned at may correspond to the angle of the first tarso-metatarsal joint medially. The extension member **228** may also include an angled portion extending from the second side **212** to the end of the extension member **228**. The extension member **228** may be shaped, for example, to fit within the joint space between two bones, such as, a first metatarsal and cuneiform, as well as to mate with the articular joints. The angled portion of the extension member **228** may, for example, be oriented laterally and should align with the long axis of the tibia, as well as fit within the joint to rest against the relatively straight surface of the adjacent bone, for example, the second metatarsal. When the angled portion of the extension member **228** is oriented against the second metatarsal, the cut guide **200** will be positioned at a 45° angle in the frontal plane.

As shown in FIGS. **11**, **12**, **17** and **18**, the first or proximal arm **230** may extend away from an end of the base portion **214** and may be, for example, tapered from the base portion **214** to the first end **206** of the cut guide **200**. The side of the first arm **230** on the first side **210** of the cut guide **200** may be, for example, longer than the side of the first arm **230** on the second side **212** of the cut guide **200**. The first arm **230** includes at least one opening **232**, **234**. In the depicted embodiment, the first arm **230** includes a first opening **232** and a second opening **234** positioned near the first end **206**. The first opening **232** may be spaced apart from the second opening **234**. The openings **232**, **234** may extend from a top surface **202** to a bottom surface **204** of the cut guide **200**. The openings **232**, **234** may extend through the first arm **230**, for example, parallel to the extension member **228**, angled as they extend from the top surface **202** toward the bottom surface **204**, or a combination of parallel and angled. In one embodiment, the first opening **232** may extend, for example, parallel to the extension member **228** and the second opening **234** may be, for example, angled with respect to the extension member **228**. Alternative combinations of the orientations of the openings **232**, **234** are also contemplated, as would be understood by one of ordinary skill in the art from the above description. The first arm **230** may be shaped to provide a bone contacting surface **236** that corresponds to the shape or surface of the bone that it will engage. The first arm **230** may be, for example, curved or arced as it extends between the first side **210** and the second side **212** of the cut guide **200**.

As shown in FIGS. **11**, **12**, **17** and **18**, the second or distal arm **240** may extend away from an end of the base portion **214** and may be, for example, tapered from the base portion **214** to the second end **208** of the cut guide **200**. The second arm **240** also includes at least one opening **242**, **244**. In the depicted embodiment, the second arm **240** includes a third opening **242** and a fourth opening **244** positioned near the second end **208**. The third opening **242** may be spaced apart from the fourth opening **244**. The openings **242**, **244** may extend from a top surface **202** to a bottom surface **204** of the cut guide **200**. The openings **242**, **244** may extend through the second arm **240**, for example, parallel to the extension member **228**, angled as they pass from the top surface **202** to the bottom surface **204**, or a combination of parallel and angled. In one embodiment, the third opening **242** may extend, for example, parallel to the extension member **228** and the fourth opening **244** may be, for example, angled with respect to the extension member **228**. Alternative combinations of the openings **242**, **244** orientations are also contemplated, as would be understood by one of ordinary skill in the art from the above description. In one embodiment, the holes **232**, **242** may be, for example, positioned such that they are parallel to one another as they extend between the top and bottom surfaces **202**, **204**. By positioning the holes **232**, **242** parallel to each other, the cut guide **200** may be, for example, removed from guide wires inserted through holes **232**, **242** without removing the guide wires. In addition, parallel holes **232**, **242** allow for the relative rotation between the two guide wires to be measured or calculated after the bones are cut using cut guide **200**. Further, the holes **232**, **242** may be, for example, spaced apart from the extension member **228** a standard or set distance to allow for interchangeability with alternative cut guides **100**, **250**, **300**, **400**, if a different or additional resection is needed. The second arm **240** may be shaped to provide a bone contacting surface **246** that corresponds to the surface or shape of the bone that it will engage. The second arm **240** may be, for example, curved or arced as it extends between the first side **210** and the second side **212**. The second arm **240** may have, for example, a larger length and width than the first arm **230**.

The openings **232**, **234**, **242**, **244** may be positioned such that wires inserted into the first and second openings **232**, **234** cross above the cut guide **200** and wires inserted into the third and fourth openings **242**, **244** cross above the cut guide **200**. By positioning the openings **232**, **234** and openings **242**, **244** such that inserted wires cross above the openings **232**, **234** and openings **242**, **244**, respectively, the surgeon may make a smaller surgical incision and reduce the interaction or interference with other instruments during the procedure. The openings **232**, **234**, **242**, **244** being positioned to allow the wires to cross also allows for the cut guide **200** to be, for example, suspended above and/or in contact with the bone surfaces being cut. Suspending the cut guide **200** above the bone surfaces prevents the cut guide **200** from being angled or tilted on the irregular bone surface and avoids moving the slots **216**, **218**, **220**, **222**, which would affect the proposed cut angles.

Referring now to FIGS. **19-26**, yet another cut guide **250** is shown. The cut guide **250** includes a top surface **252**, a bottom surface **254**, a first or proximal end **256**, a second or distal end **258**, a first or medial side **260**, and a second or lateral side **262**. The top surface **252** may be, for example, narrower than the top surface **202** of cut guide **200** to provide for smaller angular corrections. The cut guide **250**

also includes a base portion **264**, a paddle, fin or extension member **278** extending away from the bottom surface **254** of the base portion **264**, a first or proximal arm **280** extending away from the base portion **264** on a first end **256**, and a second or distal arm **290** extending away from the base portion **264** on a second end **258**. The cut guide **250** may be, for example, a right foot cut guide. A mirror image of the cut guide **250** for, for example, a left foot is also contemplated. The cut guide **250** may provide, for example, for transverse plane correction angles of approximately 2°, 4°, 6°, 8°, 10°, 12° and 14°, although alternative angles are also contemplated.

As shown in FIGS. **19**, **23** and **24**, the top surface **252** of the base portion **264** may be, for example, curved or arced between the first side **260** and the second side **262**. The top surface **252** of the base portion **264** may include, for example, a flat or planar portion positioned between a first curvature or arc extending from the first side **260** to the flat portion and a second curvature or arc extending from the second side **262** to the flat portion, as shown in FIGS. **23** and **24**. The end of the base portion **264** near the first end **256** of the cut guide **250** may be, for example, angled from the second side **262** to the first side **260**, as shown in FIG. **25**. The end of the base portion **264** near the second end **258** of the cut guide **250** may extend, for example, perpendicularly between the first side **260** and the second side **262**, as shown in FIG. **25**.

The base portion **264** also includes at least one slot **266**, **268**, **270**, **272**, as shown in FIGS. **19-22**, **25** and **26**. In the depicted embodiment, the base portion **264** includes a first slot **266** adjacent to a second slot **268** and a third slot **270** adjacent to a fourth slot **272**. The first and second slots **266**, **268** are positioned on the base portion **264** near the second end **258** of the cut guide **250** and the third and fourth slots **270**, **272** are positioned on the base portion **264** near the first end **256** of the cut guide **250**. The slots **266**, **268**, **270**, **272** may extend, for example, linearly through the base portion **264** from the top surface **252** to the bottom surface **254**. The slots **266**, **268**, **270**, **272** may also be, for example, angled as the slots **266**, **268**, **270**, **272** extend from the top surface **252** to the bottom surface **254**. The slots **266**, **268**, **270**, **272** may be angled, for example, approximately 1° to 4° an more specifically, approximately 2°, as the slots **266**, **268**, **270**, **272** extend from the top surface **252** to the bottom surface **254**. It is also contemplated that some of the slots **256**, **258**, **230**, **232** may be angled and other slots **256**, **258**, **260**, **262** may be linear as they extend through the base portion **254** from the top surface **252** to the bottom surface **254**.

The slots **266**, **268** may also extend, for example, relatively perpendicular to the first side **260** and the second side **262** as the slots **266**, **268** extend from the first side **260** to the second side **262**, as shown in FIGS. **19-22**, **25** and **26**. The slots **270**, **272** may be, for example, angled as the slots **270**, **272** extend between the second side **262** and the first side **260**. The slots **270**, **272** may also be, for example, angled toward the slots **266**, **268** as the slots **270**, **272** extend from the second side **262** to the first side **260**. The slots **270**, **272** may be positioned to extend parallel to the end of the base portion **264** near the first end **256** of the cut guide **250**. The slots **270**, **272** may be, for example, angled at approximately 10°, 12°, 14°, and 16° as they extend between the first side **260** and the second side **262** providing for angulation corrections of 8°, 10°, 12°, and 14°, respectively. The slots **266**, **268**, **270**, **272** may be configured or sized and shaped to receive a saw blade and may have a width of, for example, approximately 0.58 mm to 0.92 mm. The slots **266**, **268**, **270**, **272** may be positioned, for example, to allow for removal of the articular cartilage. To prevent resecting more tissue than absolutely necessary, the slots **266**, **268**, **270**, **272** may be positioned, for example, such that the medial portion of the slots **266**, **268**, **270**, **272** are aligned with the intersection of the cartilage and bone or the cartilage-bone line.

The base portion **264** may also include a hole or dorsal hole **274**, as shown in at least FIGS. **19-21** and **23-26**. The hole **274** is positioned between the second slot **268** and the third slot **270** near the second side **262** of the base portion **264**. The hole **274** may extend, for example, through the base portion **264** from the top surface **252** of the cut guide **250** and to an intersection point within the extension member **278**. As shown in FIGS. **23**, **24** and **26**, as the hole **274** extends into the extension member **278**, the hole **274** forms an opening in a proximal-distal direction through the extension member **278**. The hole **274** may, for example, extend into the cut guide **250** parallel to the angled portion of the extension member **278**, as shown in FIGS. **20**, **23** and **24**. The hole **274** may also be sized and shaped or configured, for example, to receive a wire, alignment wire, k-wire, guide wire or the like to provide information on the position of the cut guide **250** in a joint. For example, the wire inserted into hole **274** should align approximately with the long axis of the tibia to provide the proper orientation of the cut guide **250** relative to the joint, which may be, for example, approximately 45° from dorsal and 45° from medial in the frontal plane.

Referring now to FIGS. **19-22** and **26**, the base portion **264** may also include a recessed region **276** positioned on the bottom surface **254**. The recessed region **276** extends from the first side **260** to the second side **262** and into the base portion **264** from the bottom surface **254** toward the top surface **252**. The extension member **278** is coupled to the recessed region **276** of the base portion **264** and extends away from the recessed region **276**. In addition, the extension member **278** is positioned between the second slot **268** and the third slot **270** and extends from the second side **262** toward the first side **260**, as shown in FIGS. **20**, **23**, **24** and **26**. The extension member **278** may include a perpendicular portion near the first side **260** that extends perpendicularly away from the bottom surface **254**. The perpendicular portion of the extension member **278** may be, for example, angled when the cut guide **250** is inserted into a patient's joint and the angle that the perpendicular portion is positioned at may correspond to the angle of the first tarsometatarsal joint medially. The extension member **278** may also include an angled portion extending from the second side **262** to the end of the extension member **278**. The extension member **278** may be shaped, for example, to fit within the joint space between two adjacent bones, such as, a first metatarsal and cuneiform, as well as to make contact with the two side of an articular joint. The angled portion of the extension member **278** may, for example, be oriented laterally and should align with the long axis of the tibia, as well as fit within the joint to rest against the relatively straight surface of the adjacent bone, for example, the second metatarsal. When the angled portion of the extension member **228** is oriented against the second metatarsal, the cut guide **250** will be positioned at a 45° angle in the frontal plane.

As shown in FIGS. **19**, **20**, **25** and **26**, the first or proximal arm **280** may extend away from an end of the base portion **264** and may be, for example, tapered from the base portion **264** to the first end **256** of the cut guide **250**. The side of the first arm **280** on the first side **260** of the cut guide **250** may be, for example, longer than the side of the first arm **280** on the second side **262** of the cut guide **250**. The first arm **280**

includes at least one opening **282**, **284**. In the depicted embodiment, the first arm **280** includes a first opening **282** and a second opening **284** positioned near the first end **256**. The first opening **282** may be spaced apart from the second opening **284**. The openings **282**, **284** may extend from a top surface **252** to a bottom surface **254** of the cut guide **250**. The openings **282**, **284** may extend through the first arm **280**, for example, parallel to the extension member **278**, angled as they extend from the top surface **252** toward the bottom surface **254**, or a combination of parallel and angled orientations. In one embodiment, the first opening **282** may extend, for example, parallel to the extension member **278** and the second opening **284** may be, for example, angled with respect to the extension member **278**. Alternative, combinations of orientations of the openings **282**, **284** are also contemplated, as would be understood by one of ordinary skill in the art from the above description. The first arm **280** may be shaped to provide a bone contacting surface **236** that corresponds to the shape of the bone that it will engage. The first arm **280** may be, for example, curved or arced as it extends between the first side **260** and the second side **262** of the cut guide **250**.

As shown in FIGS. **19**, **20**, **25** and **26**, the second or distal arm **290** may extend away from an end of the base portion **264** and may be, for example, tapered from the base portion **264** to the second end **258** of the cut guide **250**. The second arm **290** includes at least one opening **292**, **294**. In the depicted embodiment, the second arm **290** includes a third opening **292** and a fourth opening **294** positioned near the second end **258**. The third opening **292** may be spaced apart from the fourth opening **294**. The openings **292**, **294** may extend from the top surface **252** to the bottom surface **254** of the cut guide **250**. The openings **292**, **294** may extend through the second arm **290**, for example, parallel to the extension member **278**, angled as they extend from the top surface **252** toward the bottom surface **254**, or a combination of parallel and angled. In one embodiment, the third opening **292** may extend, for example, parallel to the extension member **278** and the fourth opening **294** may be, for example, angled with respect to the extension member **278**. Alternative combinations of the orientations of the openings **292**, **294** are also contemplated, as would be understood by one of ordinary skill in the art from the above description. In one embodiment, the openings **282**, **292** may be, for example, positioned such that they are parallel to one another as they extend between the top and bottom surfaces **252**, **254**. By positioning the openings **282**, **292** parallel to each other, the cut guide **250** may be, for example, removed from guide wires inserted through openings **282**, **292** without removing the guide wires. In addition, parallel openings **282**, **292** allow for the relative rotation between the two guide wires to be measured or calculated after the bones are cut using cut guide **250**. Further the openings **282**, **292** may be, for example, spaced apart from the extension member **278** a standard or set distance to allow for interchangeability with alternative cut guides **100**, **200**, **300**, **400**, if a different or additional resection is needed. The second arm **290** may be shaped to provide a bone contacting surface **296** that corresponds to the shape of the bone surface that it will engage. The second arm **290** may be, for example, curved or arced as it extends between the first side **260** and the second side **262**. The second arm **290** may have, for example, a larger length and width than the first arm **280**.

The openings **282**, **284**, **292**, **294** may be positioned such that wires inserted into the first and second openings **282**, **284** and wires inserted into the third and fourth openings **292**, **294** all cross above the cut guide **250**. By positioning the openings **282**, **284** and openings **292**, **294** such that inserted wires cross above the openings **282**, **284** and openings **292**, **294**, respectively, the surgeon can make a smaller surgical incision and reduce the interaction or interference with other instruments during the procedure. The openings **282**, **284**, **292**, **294** being positioned to allow wires to cross also allows for the cut guide **250** to be, for example, suspended above and/or in contact with the bone surfaces being cut. Suspending the cut guide **250** above the bone surfaces prevents the cut guide **250** from being tilted on the irregular bone surface and therefore avoids moving the slots **282**, **284**, **292**, **294**, which would affect the proposed cut angles.

Another cut guide **300** is shown in FIGS. **27-34**. The cut guide **300** includes a top surface **302**, a bottom surface **304**, a first end **306**, a second end **308**, a first side **310**, and a second side **312**. The first end **306** may be, for example, a proximal end, and the second end **308** may be, for example, a distal end, or vice versa. The first side **310** may be, for example, a medial side, and the second side **312** may be, for example, a lateral side, or vice versa. The cut guide **300** also includes a base portion **314**, a paddle, fin or extension member **322** extending away from the bottom surface **304** of the base portion **314**, and an arm **330** extending away from the base portion **314** on the second end **308**. As shown in FIGS. **27-34**, the cut guide **300** may be, for example, a right foot cut guide. The cut guide **300** may provide, for example, a 4° angulation from dorsal to plantar on the metatarsal.

Cut guide **300** may be used, for example, when a surgeon decides that correction of the first metatarsal in plantarflexion is not sufficient enough and needs to take off more of the metatarsal from the dorsal to plantar direction. Alternatively, cut guide **300** may be used, for example, when a surgeon knows from pre-operative radiographs that the first ray is dorsiflexed in order to cut more bone of the metatarsal plantarly to correct the dorsiflexion. For example, when guide **300** is used, it will be inserted into the patient's joint, the surgeon will use cut guide **300** to cut the first metatarsal, then cut guide **300** will be removed and replaced with another cut guide, such as, cut guide **100**, **200**, **250**, to cut the cuneiform. The second guide **100**, **200**, **250** will be selected based on the size and desired angular correction of the cuneiform. The cut guide **300** may be removed from the patient's bones, for example, by sliding the guide **300** off a guide wire inserted through the opening **332** and inserting the second cut guide **100**, **200**, **250** onto the guide wire to properly align the second cut guide **100**, **200**, **250** on the patient's bones with respect to the first cut made to the metatarsal.

As shown in FIGS. **27**, **31** and **32**, the top surface **302** of the base portion **314** may be, for example, curved or arced between the first side **310** and the second side **312**. In an embodiment, the top surface **302** of the base portion **314** may include, for example, a flat or planar portion positioned between a first curvature or arc extending from the first side **310** to the flat portion and a second curvature or arc extending from the second side **312** to the flat portion. The base portion **314** also includes at least one slot **316**, **318**, as shown in FIGS. **27-30**, **33** and **34**. In the depicted embodiment, the first slot **316** is positioned adjacent to a second slot **318**. The slots **316**, **318** may extend, for example, through the base portion **314** from the top surface **302** to the bottom surface **304** of the cut guide **300**. The slots **316**, **318** may be, for example, angled as the slots **316**, **318** extend from the top surface **302** to the bottom surface **304**. The slots **316**, **318** may be angled, for example, approximately 1° to 4° and more specifically, approximately 2°, as the slots **316**, **318**

extend between the top surface **302** and the bottom surface **304**. It is also contemplated that the interior slot **316** may be angled while the exterior slot **318** may be linear as they extend between the top and bottom surfaces **302**, **304**.

In addition, the slots **316**, **318** may be angled as they extend across the base portion **314** from the first side **310** to the second side **312**, as shown in FIGS. **33** and **34**. The slots **316**, **318** may be, for example, angled at approximately 6° as they extend between the first and second sides **310**, **312** providing for an angulation correction of 4°. The slots **316**, **318** may be configured or sized and shaped to receive a saw blade and may have a width of, for example, approximately 0.58 mm to 0.92 mm. As shown in FIG. **33**, the slots **316**, **318** may be angled from a distal-medial position to a proximal-lateral position of the cut guide **300**. The slots **316**, **318** may be positioned, for example, to allow for removal of the articular cartilage only. To prevent resecting too much tissue, the slots **316**, **318** may be positioned, for example, such that the medial portion of the slots **316**, **318** are aligned with the cartilage and bone boundary.

The base portion **314** also includes a hole or dorsal hole **320**, as shown in at least FIGS. **27-29**, **33** and **34**. The hole **320** is positioned between the second slot **318** and the arm **330**. The hole **320** may extend, for example, through the base portion **314** from the top surface **302** to the bottom surface **304**. The hole **320** may, for example, extend through the base portion **314** of the cut guide **300** parallel to the angled portion of the extension member **322**, as shown in FIG. **27**. The hole **320** may be sized and shaped or configured, for example, to receive a wire, alignment wire, k-wire, guide wire, directional wire or the like to provide information on the position of the cut guide **300** in a joint. For example, the wire inserted into hole **320** should align approximately with the long axis of the tibia to provide the proper orientation of the cut guide **300** in the joint, which may be, for example, approximately 45° from dorsal and 45° from medial in the frontal plane.

Referring now to FIGS. **28-32** and **34**, the extension member **322** is attached to a bottom surface **304** of the base portion **314**. The extension member **322** also extends away from the base portion **314** and is positioned on the first end **306** of the cut guide **300**. In addition, the extension member **322** extends from the second side **312** toward the first side **310**, as shown in at least FIGS. **28**, **31** and **32**. The extension member **322** may include a portion near the first side **310** that extends perpendicularly away from the bottom surface **304**. The perpendicular portion of the extension member **322** may be, for example, angled when the cut guide **300** is inserted into a patient's joint and the angle that the perpendicular portion is positioned at may correspond to the angle of the first tarso-metatarsal joint medially. The extension member **322** may also include an angled portion extending from the second side **312** to the end of the extension member **322**. The extension member **322** may be shaped, for example, to fit within the joint space between the two bones, such as, a first metatarsal and cuneiform, as well as to mate with the two sides of an articular joint. The angled portion of the extension member **322** may, for example, be oriented laterally and should align with the long axis of the tibia, as well as fit within the joint to rest against the relatively straight surface of the adjacent bone, for example, the second metatarsal. When the angled portion of the extension member **322** is oriented against the second metatarsal, the cut guide **300** will be positioned at a 45° angle in the frontal plane.

As shown in FIGS. **27-30** and **32-34**, the arm **330** may extend away from an end of the base portion **314** and may be, for example, tapered from the base portion **314** to the second end **308** of the cut guide **300**. The arm **330** may be, for example, a distal arm. The arm **330** may include at least one opening **332**, **334**. In the depicted embodiment, the arm **330** includes a first opening **332** and a second opening **334** positioned near the second end **308**. The first opening **332** may be spaced apart from the second opening **334**. The openings **332**, **334** may extend from a top surface **302** to a bottom surface **304** of the cut guide **300**. The openings **332**, **334** may extend through the arm **330**, for example, parallel to the extension member **322**, be angled as the openings **332**, **334** extend from the top surface **302** toward the bottom surface **304**, or a combination of being parallel and angled. In one embodiment, the first opening **332** may extend, for example, parallel to the extension member **322** and the second opening **334** may be, for example, angled with respect to the extension member **322** resulting in the inserted wires, guide wires, k-wires and the like to cross above the cut guide **300**. By positioning the openings **332**, **334** such that the inserted wires cross above the openings **332**, **334**, the surgeon may make a smaller surgical incision and there will be less interaction or interference with other instruments during the procedure. Alternative combinations of the orientations of the openings **332**, **334** are also contemplated, as would be understood by one of ordinary skill in the art from the above description. The arm **330** may be shaped, for example, to provide a bone contacting surface **336** that corresponds to the surface or shape of the bone that the arm **330** will engage. The arm **330** may be, for example, curved or arced as it extends between the first side **310** and the second side **312**.

Referring now to FIGS. **35** and **36**, another cut guide **350** is shown. As shown, the cut guide **350** may be a mirror image of the cut guide **300** in a medial-lateral direction, therefore, the cut guide **350** will not be described in full detail for brevity purposes. Therefore, the cut guide **350** may be, for example, for a left foot. The cut guide **350** may include a top surface **352**, a bottom surface **354**, a first or proximal end **356**, a second or distal end **358**, a first or medial side **360**, and a second or lateral side **362**, which may be as described above with respect to the top surface **302**, the bottom surface **304**, the first or proximal end **306**, the second or distal end **308**, the first or medial side **310**, and the second or lateral side **312**, respectively, which will not be described again here for brevity sake. As the cut guide **350** is a mirror image of the cut guide **300**, the cut guide **350** may also include a base portion **364** which may be the mirror image of the base portion **314** as described above. In addition, the hole **320** is positioned on a left side of the cut guide **300** when in an insertion position and the hole **370** is positioned on the right side of the cut guide **350** when in an insertion position. The slots **366**, **368** and the hole **370** may be similar to the slots **316**, **318** and hole **320**, as described in greater detail above. Specifically, as the cut guide **350** is a mirror image of the cut guide **300**, the slots **366**, **368** may be angled from a distal-lateral position to a proximal-medial position of the cut guide **350** resulting in 4° of cumulative dorsal to plantar cutting, as described in greater detail above with reference to cut guide **300**. Further, the cut guide **350** may include a fin, paddle or extension member **372** and an arm **380**, which may be as described above with respect to the fin, paddle or extension member **322** and the arm **330**, respectively. The openings **382**, **384** and bone contacting surface **386** may be as described above with reference to the openings **332**, **334** and bone contacting surface **336**, which will not be described again here for brevity purposes.

Another cut guide **400** is shown in FIGS. **37-44**. The cut guide **400** includes a top surface **402**, a bottom surface **404**, a first end **406**, a second end **408**, a first side **410**, and a second side **412**. The first end **406** may be, for example, a proximal end, and the second end **408** may be, for example, a distal end, or vice versa. The first side **410** may be, for example, a medial side, and the second side **412** may be, for example, a lateral side, or vice versa. The cut guide **400** also includes a base portion **414**, a paddle, fin or extension member **418** extending away from the bottom surface **404** of the base portion **414**, and an arm **420** extending away from the base portion **414** on the second end **408**. The cut guide **400** may be, for example, used on a right foot or a left foot.

The cut guide **400** may be, for example, used after any one of cut guides **100**, **150**, **200**, **250**, **300**, **350** to take off additional tissue or bone when the original cut does not take off enough tissue or bone. The cut guide **400** may be positioned so that the extension member **418** is against and parallel to a previous cut in the joint, to cut away additional tissue or bone without changing the angulation of the prior cut.

As shown in FIGS. **41** and **42**, the top surface **402** of the base portion **414** may be, for example, curved or arced between the first side **410** and the second side **412**. In an embodiment, the top surface **402** of the base portion **414** may include, for example, a flat or planar portion positioned between a first curvature or arc extending from the first side **410** to the flat portion and a second curvature or arc extending from a second side **412** to the flat portion. The base portion **414** also includes at least one slot **416**, as shown in FIGS. **37-40**, **43** and **44**. In the depicted embodiment, the slot **416** is positioned near a center or longitudinal axis of the base portion **414**. The slot **416** may extend, for example, linearly through the base portion **414** from the top surface **402** to the bottom surface **404** of the cut guide **400**. The slot **416** may also be, for example, positioned parallel with the extension member **418**, as the slot **416** extends from between the top surface **402** and the bottom surface **404**. The slot **416** may be positioned, for example, to allow for removal of the articular cartilage layer of the bones. To prevent resecting more bone than absolutely necessary, the slot **416** may be positioned, for example, such that the medial portion of the slot **416** is aligned with the cartilage-bone border. The slot **416** may be positioned, for example, a first distance from the extension member **418**. The slot **416** may be configured or sized and shaped to receive a saw blade and may have a width of, for example, approximately 0.58 mm to 0.92 mm.

Referring now to FIGS. **37-42** and **44**, the extension member **418** is coupled to a bottom surface **404** of the base portion **414**. The extension member **418** also extends away from the base portion **414** and is positioned on the first end **406** of the cut guide **400**. In addition, the extension member **418** extends from the second side **412** to the first side **410**, as shown in at least FIGS. **38**, **41** and **42**. The extension member **418** may be tapered and include a first angled portion extending from the first side **410** to the end of the extension member **418** and a second angled portion extending from the second side **412** to the end of the extension member **418**. As the cut guide **400** may be used on either a right or left foot, extension member **418** is angled on both the first and second sides **410**, **412** to allow for an angled portion to mate with the lateral side of the joint. Further, the angled portion may rest against the relatively straight surface of the adjacent bone, for example, the second metatarsal. When an angled portion of the extension member **418** is oriented against the second metatarsal, the cut guide **400** will be positioned at a 45° angle medial in the frontal plane. The extension member **418** may be shaped, for example, to fit within the joint space between two bones, such as, a first metatarsal and cuneiform, as well as to mate with the surface of an articular joint.

As shown in FIGS. **37-40** and **42-44**, the arm **420** may extend away from an end of the base portion **414** and may be, for example, tapered from the base portion **414** to the second end **408** of the cut guide **400**. The portion of the arm **420** at the second end **408** of the cut guide **400** may be, for example, angled as the arm **420** extends from the second side **412** to the first side **410**. The arm **420** may be, for example, a distal arm. The arm **420** may include at least one opening **422**, **424**. In the depicted embodiment, the arm **420** includes a first opening **422** and a second opening **424** positioned near the second end **408**. The first opening **422** may be spaced apart from the second opening **424**. The openings **422**, **424** may extend from the top surface **402** through the bottom surface **404**. The openings **422**, **424** may extend through the arm **420**, for example, parallel to the extension member **418**, angled with respect to the top surface **402** and the bottom surface **404**, or a combination of being parallel and angled. In one embodiment, the first opening **422** may extend, for example, parallel to the extension member **418** and the second opening **424** may be, for example, angled with respect to the extension member **418** to cause the inserted wires, guide wires, k-wires and the like to cross above the cut guide **400**. By positioning the openings **422**, **424** such that inserted wires cross above the openings **422**, **424**, a smaller surgical incision may be made and less interaction or interference with other instruments will be experienced during the procedure. The openings **422**, **424** positioning the wires to cross also allows for the cut guide **400** to be, for example, suspended above and/or against the bone surfaces being cut. The ability to suspend the cut guide **400** above the bone surfaces prevents the cut guide **400** from being angled or tilted because of the inconsistent bone surface which avoids moving the slot **416** and prevents the proposed cut angles from being moved. Alternative combinations of the orientations of the openings **422**, **424** are also contemplated, as would be understood by one of ordinary skill in the art from the above description. The arm **420** may be shaped, for example, to provide a bone contacting surface **426** that corresponds to the shape of the bone surface that the arm **420** will engage. The arm **420** may be, for example, curved or arced as it extends between the first side **410** and the second side **412**.

With continued reference to the cut guide **400** of FIGS. **37-44**, an alternative embodiment cut guide **430** and insertion handle **450** are shown in FIGS. **66-74**. The cut guide **430** includes a top surface **402**, a bottom surface **404**, a first end **406**, a second end **408**, a first side **410**, and a second side **412**, as described in greater detail above with reference to cut guide **400** and which will not be described again here for brevity sake. The cut guide **430** also includes a base portion **414**, a paddle, fin or extension member **418** extending away from the bottom surface **404** of the base portion **414**, and an arm **420** extending away from the base portion **414** on the second end **408**, as described in greater detail above with reference to cut guide **400** and which will not be described again here for brevity sake. The base portion **414** also includes at least one slot **416**, as also described in greater detail above with reference to cut guide **400** and which will not be described again here for brevity sake. The arm **420** may include at least one opening **422**, **424**, as described in greater detail above with reference to cut guide **400** and which will not be described again here for brevity sake. The arm **420** may be shaped, for example, to provide a bone

contacting surface **426** that corresponds to the shape of the bone surface that the arm **420** will engage, as described in greater detail above with reference to cut guide **400** and which will not be described again here for brevity sake. The cut guide **430** may be, for example, used on a right foot or a left foot.

As shown in FIGS. **66-69** and **71**, the cut guide **430** may also include a recess or opening **432** inset into the surface of the base portion **414** on the first end **406**. The recess **432** may have, for example, an oval, round, or a polygonal shaped recess for receiving a correspondingly shaped protrusion **460** on an insertion handle **450**. The insertion handle **450** allows for a surgeon to apply pressure against a patient's joint to achieve maximum contact between the cut guide **430** and the previously cut bone. As shown in FIGS. **66-74**, the insertion handle **450** includes a handle portion **452** with a stem portion **454** extending away from a distal end of the handle portion **452**. The stem portion **454** includes a tip **456** at the distal end of the stem portion **454**. The tip **456** includes an end surface **458** which may be, for example, angled with respect to the proximal end of the handle portion **452**. The end surface **458** may be, for example, angled to provide the desired angle for insertion of the cut guide **430**. The insertion handle **450** may further include an engagement member or protrusion **460** extending away from the end surface **458**. The engagement member **460** may be, for example, shaped to correspond to the recess **432** in the cut guide **430**. The engagement member **460** may have, for example, an oval, round or polygonal shape.

Referring now to FIGS. **45** and **46**, a guide system **500** is shown. The guide system **500** includes a cut guide **100**, **150**, **200**, **250**, **300**, **350** and an alignment guide **510**. The guide system **500** may also include the cut guide or revision cut guide **400**. The guide system **500** may also include a position rotation device **550**, as shown in FIG. **64**. Further, the guide system **500** may include at least one directional wire **606** and at least two wires, guide wires, k-wires, or the like **608**, **610**, **612**, **614**, **616**, as shown in FIGS. **57-59**. In the depicted embodiment of FIGS. **45** and **46**, the guide system **500** includes the cut guide **100** and the alignment guide **510**. Although not shown, it is also contemplated that cut guides **150**, **200**, **250**, **300**, **350** may be interchangeable with cut guide **100** in the below described method or alternatively, used in conjunction with the cut guide **100** as described in greater detail below. The various embodiments of the cut guides **100**, **150**, **200**, **250**, **300**, **350** are described in greater detail above and will not be described again here for brevity sake. As shown in FIGS. **45** and **46**, the alignment guide **510** removably engages the cut guide **100**. The alignment guide **510** may, for example, couple to at least one slot **116**, **118**, **120**, **122** of the cut guide **100**. In one embodiment, the alignment guide **510** couples to two slots **116**, **118**, **120**, **122** and, for example, it is preferable that the alignment guide **510** couple to the two proximal slots **120**, **122**.

As shown in FIGS. **45-52**, the alignment guide **510** includes a base portion **512** with a top surface **514**, a bottom surface **516**, a first end **518**, a second end **520**, a first side **522**, and a second side **524**. The a first end **518** may be, for example, a proximal end, a second end **520** may be, for example, a distal end, a first side **522** may be, for example, a medial side, and a second side **524** may be, for example, a lateral side. The base portion **512** may also include at least one opening **526**, **528**, **530** extending between the first end **518** and the second end **520**. In the depicted embodiment, the base portion **512** includes a first opening **526** positioned near the first side **522**, a third opening **530** positioned near the second side **524**, and a second opening **528** positioned between the first opening **526** and the third opening **530**, as shown in FIGS. **45-48** and **50**. The openings **526**, **528**, **530** may be, for example, sized and shaped to receive a wire, guide wire, k-wire, directional wire, or the like, as shown in FIGS. **55-59**.

The alignment guide **510** may also include a first extension member or leg member **532** extending away from a bottom surface **516** of the base portion **512**, as shown in FIGS. **45**, **47-49**, **51**, and **52**. The first extension member **532** may include a first portion **534**, a second portion **536** and a first engagement member **538**. The first portion **534** may be coupled to the bottom surface **516** of the base portion **512** at a first end, extend away from a position near a center of the base portion **512** in the direction of the first end **518** at an angle, and be coupled to the second portion **536** at a second end. The first end of the second portion **536** may extend from the second end of the first portion **534** in a direction toward the second end **520** of the base portion **512** and be coupled to the first engagement member **538** at a second end. The first engagement member **538** may be coupled to the second portion **536** at a first end and extend in a plantar direction away from the second portion **536** to a second end. The second end of the first engagement member **538** may be shaped to engage the slots in a cut guide, for example, the slots **116**, **118**, **120**, **122** of cut guide **100**, as shown in FIGS. **45** and **46**. The second end of the second engagement member **546** may also engage the slots of alternative cut guides, such as, cut guides **150**, **200**, **250**, **300**, **350**.

The alignment guide **510** may also include a second extension member or leg member **540** extending away from a bottom surface **516** of the base portion **512**, as shown in FIGS. **45**, **47-49**, **51**, and **52**. The second extension member **540** may include a third portion **542**, a fourth portion **544** and a second engagement member **546**. The third portion **542** may be coupled to the bottom surface **516** of the base portion **512** at a first end, extend away from a position near a center of the base portion **512** in the direction of the second end **520** at an angle, and be coupled to the fourth portion **544** at a second end. The first end of the second extension member **540** may also couple to or engage the first end of the first extension member **532**. The first end of the fourth portion **544** may extend from the second end of the third portion **542** in a direction toward the first end **518** of the base portion **512** and be coupled to the second engagement member **546** at a second end. The second engagement member **546** may be coupled to the fourth portion **544** at a first end and extend in a plantar direction away from the fourth portion **544** to a second end. The second end of the second engagement member **546** may be shaped to engage slots in a cut guide, for example, the slots **116**, **118**, **120**, **122** of cut guide **100**, as shown in FIGS. **45** and **46**. The second end of the second engagement member **546** may also engage the slots of alternative cut guides, such as, cut guides **150**, **200**, **250**, **300**, **350**.

Referring now to FIGS. **45**, **47-49**, and **52**, the first extension member **532** and second extension member **540** may be, for example, mirror images of each other as the members **532**, **540** extend away from the bottom surface **516** of the base portion **512**. The extension members **532**, **540** may be shaped, for example, to form a triangular shape with the first portion **534** forming a first side, the third portion **542** forming a second side, and the second portion **536** and the fourth portion **544** together forming a third side. The shape of the extension members **532**, **540** allows for the alignment guide **510** to be positioned with respect to a cut guide **100**, **150**, **200**, **250**, **300**, **350** to create a visual depiction of the angle of deformity correction in both the dorsal and lateral

planes. The first engagement member **538** may extend away from the second portion **536**, for example, generally parallel to the second engagement member **546** as the second engagement member **546** extends away from the fourth portion **544**. The engagement members **538**, **546** may extend away from the second and fourth portions **536**, **544**, respectively, for example, generally perpendicular to the top surface **514** of the base portion **512**. Alternatively, it is also contemplated that the engagement members **538**, **546** may extend, for example, away from the second and fourth portions **536**, **544**, respectively, at an angle with respect to the top surface **514** of the base portion **512**. The extension members **532**, **540** may act to create, for example, a spring like mechanism in the engagement members **538**, **546** to allow the engagement members **538**, **546** to couple to the cut guides **100**, **150**, **200**, **250**, **300**, **350**.

The position rotation device **550** is shown in FIGS. **64** and **65**. The rotation device includes a base **552** with a top surface **554** opposite a bottom surface **556**. The base **552** also includes a first end **558** opposite a second end **560**. The base **552** may be, for example, curved to form a semi-circle or arc as the base **552** extends from the first end **558** to the second end **560**. The base **552** may also optionally include a center alignment groove **562**. The alignment groove **562** may be inset into a front side of the base **552** and may extend from the top surface **554** through the base **552** to the bottom surface **556**.

With continued reference to FIGS. **64** and **65**, the base **552** further includes a first or zero opening **564** positioned, for example, centered between the first end **558** and the second end **560** of the base **552**. The zero opening **564** may be positioned adjacent to the first end **582** of the shaft **580**. The zero opening **564** may also be positioned, for example, near a back side of the base **552**. The zero opening **564** may have, for example, an insertion angle for a guide wire, k-wire or the like of 0° as the opening **564** extends from the top surface **554** to the bottom surface **556**. The zero opening **564** may be used for positioning and aligning the position rotation device **550** on a patient. The zero opening **564** may be, for example, sized and shaped or configured to receive a guide wire, k-wire or the like, for aligning the rotation device **550** on a patient's bone.

As shown in FIGS. **64** and **65**, the base **552** may also include a first set of overlapping openings **566**. The openings **566** may be positioned along the front side of the rotation device **550** between the groove **562** and the first end **558**. The base **552** may also include a second set of overlapping openings **568**. The openings **568** may be positioned along the front side of the rotation device **550** between the groove **562** and the second end **560**. The base **552** may also include a third opening **570** positioned along the front side of the rotation device **550** between the first set of openings **566** and the first end **558**. The base **552** may also include a fourth opening **572** positioned along the front side of the rotation device **550** between the second set of openings **568** and the second end **560**. The openings **566**, **568**, **570**, **572** may be, for example, angled as they extend from the top surface **554** to the bottom surface **556**. The first set of overlapping openings **566** and the second set of overlapping openings **568** may each include, for example, three openings. The three overlapping openings **566**, **568** may each have an angle of rotation relative to the zero opening **564**, for example, the openings **566**, **568** closest to the groove **562** may have a rotation angle of approximately 10° to 19°. The next openings **566**, **568** may have a rotation angle of, for example, approximately 20° to 29° and the outer most opening **566**, **568** from the groove **562** may have a rotation angle of, for example, approximately 30° to 39°. Finally, the third and fourth openings **570**, **572** may have rotation angles relative to the zero opening **564** of, for example, approximately 40° to 50°. In one embodiment, the rotation angles may be, for example, 15°, 25°, 35°, and 45°. In yet another embodiment, the rotation angles may be, for example, 15°, 22°, 30°, and 45°. The openings **566**, **568**, **570**, **572** may be positioned linearly along the base **552** as it curves from the first end **558** to the second end **560** and offset from the zero opening **564**. Alternatively, each of the openings **566**, **568**, **570**, **572** may be, for example, offset from each other and the zero opening **564**.

Referring now to FIGS. **53-64**, a method of using the guide system **500** is shown. As shown in FIGS. **53-63**, the guide system **500** may include the cut guide **100**, the alignment guide **510**, the position rotation device **550**, at least one directional wire **606**, and multiple guide wires **608**, **610**, **612**, **614**, **616**. Although FIGS. **53-63** show the method using the cut guide **100**, it is also contemplated that the method may include using any one of cut guides **100**, **150**, **200**, **250**, **700**, **750**, **800**, **850**, **900**, **950**. Alternatively, the method may include using a combination of one of cut guides **300**, **350**, **1000**, **1050** on the first metatarsal and then any one of cut guides **100**, **150**, **200**, **250**, **700**, **750**, **800**, **850**, **900**, **950** on the cuneiform.

The method may include inserting the extension member **128** of the cut guide **100** into the joint space between a first bone or first metatarsal **602** and a second bone or medial cuneiform **604**, as shown in FIGS. **53** and **54**. The extension member **128** fits between the first bone **602** and second bone **604** to align the slots **116**, **118**, **120**, **122** of the base portion **114** to produce the desired angled cut. The slots **116**, **118**, **120**, **122** may be angled relative to the extension member **128** to account for the extension member **128** shifting during resection of the bone. The extension member **128** may be inserted so that the first arm **130** is positioned on the second bone **604** and the second arm **140** is positioned on the first bone **602**.

Next, the alignment guide **510** may be coupled to the cut guide **100**, as shown in FIGS. **55** and **56**. The first engagement member **538** may be, for example, inserted into a first slot **120**, **122** and the second engagement member **546** may be, for example, inserted into a second slot **120**, **122**. For example, as shown in FIGS. **55** and **56**, the first engagement member **538** may be inserted in the slot **120** and the second engagement member **546** may be inserted into the slot **122**. The method may also include inserting at least one directional wire **606** into at least one opening **526**, **528**, **530** in the alignment guide **510**. As further shown in FIGS. **55** and **56**, a directional wire **606** is inserted into the opening **530** in the alignment guide **510**. The directional wire **606** inserted into the alignment guide **510** depicts the exact angle of deformity correction in both the dorsal and lateral planes. The mating of the engagement members **538**, **546** and the slots **120**, **122** produces the resulting angle of correction and illustrates the correction angle during surgery.

After inserting a direction wire **606** into the alignment guide **510**, the method may optionally include changing the cut guide **100** to a cut guide with a different angular size. For example, if the alignment guide **510** shows an over-correction or under-correction of the hallux valgus deformity, then the surgeon may go down or up an angular size of cut guide, respectively. Each of the cut guides **100**, **150**, **200**, **250**, **300**, **350**, **700**, **750**, **800**, **850**, **900**, **950**, **1000**, **1050** may have different angular sizes and/or be for a right or left foot. If the alignment guide **510** shows an over-correction or under-correction, then the cut guide **100** may be removed from the

foot **600** and replaced with an alternative size cut guide **150**, **200**, **250**, **300**, **350**. If the cut guide **700**, **750** is used, then the cut guide **700**, **750** may be removed from the foot **600** and replaced with an alternative size cut guide **800**, **850**, **900**, **950**, **1000**, **1050**. Once the new cut guide is inserted into the foot **600**, the surgeon may re-check the correction by inserting the alignment guide **510** into the new cut guide and the directional wire **606** into the alignment guide **510**, as described in greater detail above, to determine whether the new cut guide provides the desired correction.

Once the cut guide **100**, **150**, **200**, **250**, **300**, **350**, **700**, **750**, **800**, **850**, **900**, **950**, **1000**, **1050** with the desired correction is inserted into the patient's joint space, then a k-wire, guide wire or dorsal wire **608** may be inserted into the dorsal hole **124** of the cut guide **100** between the slot **118** and the slot **120**, as shown in FIGS. **57-59**. The guide wire **608** may be used to check the orientation of the cut guide **100** by checking that the wire **608** is parallel to a patient's tibia and perpendicular to the weight-bearing surface. After the desired orientation is achieved, k-wires, guide wires, wires **610**, **612**, **614**, **616** may be inserted through the holes **132**, **134**, **142**, **144** in the cut guide **100** and into the bones **602**, **604**, to secure the cut guide **100** to the bones **602**, **604**, as shown in FIGS. **57-59**. For example, a distal-medial wire, k-wire, guide wire **610** may be inserted into the fourth opening **144** in the cut guide **100**, a proximal-medial wire, k-wire, guide wire **612** may be inserted into the second opening **134**, a distal-lateral wire, k-wire, guide wire **614** may be inserted into the third opening **142**, and a proximal-lateral wire, k-wire, guide wire **616** may be inserted into the first opening **132**, as shown in FIGS. **57-59**.

Next, the dorsal k-wire **608** and the alignment guide **510** may be removed from the cut guide **100**, as shown in FIGS. **60** and **61**. After the cut guide **100** is coupled to the bones **602**, **604** and the alignment guide **510** and dorsal k-wire **608** are removed from the cut guide **100**, the bones **602**, **604** may be cut using the desired slots **116**, **118**, **120**, **122**, as shown in FIGS. **62** and **63**. For example, a saw blade **620** of saw **618** may be inserted through the first slot **116** to cut the first bone **602**, as shown in FIG. **62**, then the saw blade **620** may be removed and inserted through the third slot **120** to cut the second bone **604**, as shown in FIG. **63**. After the bones **602**, **604** are cut, the lateral k-wires **614**, **616** and the cut guide **100** may be removed from the bones **602**, **604** and the medial k-wires **610**, **612** may be left in the bones **602**, **604**, as shown in FIG. **64**. The medial k-wires **610**, **612** may be positioned, for example, parallel to each other. If the angle of correction is not accurate the surgeon may insert another cut guide **200**, **250**, **300** over the medial k-wires **610**, **612** and perform additional cutting to achieve the desired angle of correction. Alternatively or additionally, if more tissue or bone needs to be removed from the patient's bones, then the cut guide **400** may be inserted over one of the medial k-wires **610**, **612**. The cut guide **400** may then be positioned to align the extension member **418** against the cut surface of the bone to remove additional tissue or bone parallel to the original cut. Once the desired amount of tissue and/or bone is removed and the desired angle of correction achieved, a position rotation device **550** may be slid over the medial k-wires **610**, **612**. The cartilage and bone that was resected using the cut guide **100** may also be removed from the joint, as shown in FIG. **64**.

After the bones **602**, **604** have been cut and the resected bone and cartilage removed, the rotation device **550** may be inserted over the distal-medial wire **610**, as shown in FIG. **64**. The wire **610** may be inserted into the first opening **564** of the rotation device **550**. Then, a second k-wire (not shown) may be inserted into one of the openings **566**, **568**, **570**, **572** corresponding to the desired angulation correction. After the second k-wire (not shown) is inserted through the selected opening **566**, **568**, **570**, **572**, the distal-medial wire **610** may be removed from the bone **602** and the rotation device **550**. Next, the rotation device **550** may be removed from the foot **600**. Then, the method may include rotating the bones **602**, **604** to the desired correction where the second k-wire (not shown) in the first metatarsal **602** is positioned parallel to the k-wire **612** in the medial cuneiform **604** and temporarily securing the bones **602**, **604** in the rotated position. Finally, the bones **602**, **604** may be secured in the rotated position using a plate (not shown) and screws (not shown). Finally, the surgical procedure may include performing incision closure or concomitant procedures.

Referring now to FIGS. **75-82**, another cut guide **700** is shown. The cut guide **700** includes a top surface **702**, a bottom surface **704**, a first or proximal end **706**, a second or distal end **708**, a first or medial side **710**, and a second or lateral side **712**. The cut guide **700** also includes a base portion **714** and a paddle, fin or extension member **728** extending away from the bottom surface **704** of the base portion **714**. The cut guide **700** further includes a first or proximal arm **730** extending away from the base portion **714** on a first end **706** and a second or distal arm **740** extending away from the base portion **714** on a second end **708**. The cut guide **700** may be, for example, a right foot cut guide.

As shown in FIGS. **75**, **79** and **80**, the top surface **702** of the base portion **714** may be, for example, curved or arced between the first side **710** and the second side **712**. In one embodiment, the top surface **702** of the base portion **714** may include, for example, a flat or planar portion positioned between a first curvature or arc extending from the first side **710** to the flat portion and a second curvature or arc extending from a second side **712** to the flat portion. The end of the base portion **714** near the first end **706** of the cut guide **800** may be, for example, angled from the second side **712** to the first side **710**, as shown in FIG. **81**. The end of the base portion **714** near the second end **708** of the cut guide **700** may extend, for example, perpendicularly between the first side **710** and the second side **712**, as shown in FIG. **81**. The base portion **714** also includes at least one slot **716**, **718**, **720**, **722**, as shown in FIGS. **75-78**, **81** and **82**. In the depicted embodiment, the base portion **714** includes a first slot **716** adjacent to a second slot **718** and a third slot **720** adjacent to a fourth slot **722**. The first and second slots **716**, **718** may be, for example, positioned on the second end **708** of the base portion **714** and the third and fourth slots **720**, **722** may be, for example, positioned on the first end **706** of the base portion **714**.

With continued reference to FIGS. **75-78** and **81**, the slots **716**, **718**, **720**, **722** may extend, for example, linearly through the base portion **714** from the top surface **702** to the bottom surface **704** of the cut guide **700**. Alternatively, the slots **716**, **718**, **720**, **722** may also be, for example, angled as the slots **716**, **718**, **720**, **722** extend from the top surface **702** to the bottom surface **704**. The slots **716**, **718**, **720**, **722** may be angled, for example, approximately 1° to 4° and more specifically, approximately 2°, as they extend between the top surface **702** and the bottom surface **704**. It is also contemplated that some of slots **716**, **718**, **720**, **722** may be angled and other slots **716**, **718**, **720**, **722** may be linear as they extend through the base portion **714** from the top surface **702** to the bottom surface **704**.

In addition, the slots **716**, **718**, **720**, **722** may be angled as they extend between the first side **710** and the second side **712**, for example, the slots may be angled approximately 0°

to 30° as the slots **716**, **718**, **720**, **722** extend between the first and second sides **710**, **712**. As shown, slots **716**, **718** have an angle of 0° as the slots **716**, **718** extend between the first and second sides **710**, **712** and slots **720**, **722** have an angle of 8° as the slots **720**, **722** extend between the first and second sides **710**, **712**. Although not shown with respect to cut guide **700**, it is also contemplated that both the first set of slots **716**, **718** and the second set of slots **720**, **722** may be straight as the slots **716**, **718**, **720**, **722** extend between the first and second sides **710**, **712**. As shown, the slots **720**, **722** are positioned to extend between the first and second sides **710**, **712** parallel to the first metatarsal, as discussed in greater detail above with respect to the method of using the cut guide **700**. The slots **716**, **718**, **720**, **722** may be configured or sized and shaped to receive a saw blade and may have a width of, for example, approximately 0.58 mm to 0.92 mm. The slots **716**, **718**, **720**, **722** may be positioned, for example, to allow for removal of the articular cartilage layer of the two bones. To prevent resecting more bone than absolutely necessary, the slots **716**, **718**, **720**, **722** may be positioned, for example, such that the medial portion of the slots **716**, **718**, **720**, **722** are aligned with the intersection of the cartilage and bone. In one embodiment, the slots **716**, **718** are positioned a first distance from the extension member **728**, the slots **720**, **722** are positioned a second distance from the extension member **728**. The first distance may be measured from the extension member **728** to an inner surface of the slots **716**, **718** and the second distance may be measured from the extension member **728** to an inner surface of the slots **720**, **722**.

The base portion **714** may also include a hole or dorsal hole **724**, as shown in at least FIGS. **78**, **81** and **82**. The hole **724** may be of the type described above with reference to hole **124**, which will not be described again here for brevity sake. As shown in FIGS. **75-78** and **82**, the base portion **714** also includes a recessed region **726** positioned on the bottom surface **704**. The recessed region **726** extends from the first side **710** to the second side **712** and into the base portion **714** a first distance from the bottom surface **704** toward the top surface **702**. The extension member **728** is coupled to the recessed region **726** of the base portion **714** and extends away from the recessed region **726** of the base portion **714**. In addition, the extension member **728** is positioned between the second slot **718** and the third slot **720** and also extends from the second side **712** toward the first side **710**, as shown in FIGS. **79**, **80** and **82**. The extension member **728** may be shaped, for example, to fit within the joint space between two bones, such as, a first metatarsal and cuneiform, as well as to make contact with the adjoining articular joint surfaces. The extension member **728** may include a perpendicular portion near the first side **710** that extends perpendicularly away from the bottom surface **704**. The perpendicular portion of the extension member **728** may be, for example, angled when the cut guide **700** is inserted into a patient's joint and the angle that the perpendicular portion is positioned at may correspond to the angle of the first tarsometatarsal joint medially. The extension member **728** may also include an angled portion extending from the second side **712** to the end of the extension member **728**. The angled portion of the extension member **728** may, for example, allow for the extension member **728** to fit within a variety of anatomic presentations. The angled portion of the extension member **728** may, for example, be oriented laterally and should align with the long axis of the tibia, as well as fit within the joint to rest against the relatively straight surface of the adjacent bone, for example, the second metatarsal. When the angled portion of the extension member **728** is oriented against the second metatarsal, the cut guide **700** will be positioned at a 45° angle in the frontal plane.

As shown in FIGS. **75**, **76**, **81** and **82**, the first or proximal arm **730** may extend away from an end of the base portion **714** and may have, for example, a first portion extending from the base portion **714** to a coupling portion **738** positioned at the first end **706** of the cut guide **700**. The coupling portion **738** may have a width larger than the width of the first portion of the first arm **730**. The coupling portion **738** of the first arm **730** includes at least one opening **732**, **734**. In the depicted embodiment, the first arm **730** includes a first opening **732** and a second opening **734** positioned near the first end **706**. The first opening **732** may be spaced apart from the second opening **734**. The openings **732**, **734** may extend from a top surface **702** to a bottom surface **704** of the coupling portion **738** of the cut guide **700**. The openings **732**, **734** may extend through the coupling portion **738** of the first arm **730**, for example, parallel to the extension member **728**, angled as they extend from the top surface **702** toward the bottom surface **704**, or a combination of parallel and angled. In one embodiment, the first opening **732** may extend, for example, parallel to the extension member **728** and the second opening **734** may be, for example, angled with respect to the extension member **728** to permit the inserted wires, guide wires, k-wires and the like to cross above the cut guide **700** without intersecting. By positioning the openings **732**, **734** such that inserted wires cross above the openings **732**, **734** allows for a smaller surgical incision and less interaction or interference with other instruments during the procedure. The openings **732**, **734** positioning the wires to cross also allows for the cut guide **700** to be, for example, suspended above and/or proximate to the bone surfaces being cut. The ability to suspend the cut guide **700** above the bone surfaces prevents the cut guide **700** from being titled because of varying patient anatomy and this avoids moving the slots **716**, **718**, **720**, **722** which would affect the proposed cut angles. Alternative combinations of orientations of the openings **732**, **734** are also contemplated, as would be understood by one of ordinary skill in the art from the above description. The first arm **730** may be shaped to provide a bone contacting surface **736** that corresponds to the shape of the bone that it will engage. The first arm **730** may be, for example, curved or arced as it extends between the first side **710** and the second side **712**.

As shown in FIGS. **75**, **76**, **81** and **82**, the second or distal arm **740** may extend away from an end of the base portion **714** and may have, for example, a first portion extending from the base portion **714** to a coupling portion **748** positioned at the second end **708** of the cut guide **700**. The coupling portion **748** may have a width larger than the width of the first portion of the second arm **740**. The coupling portion **748** of the second arm **740** includes at least one opening **742**, **744**. In the depicted embodiment, the second arm **740** includes a third opening **742** and a fourth opening **744** positioned near the second end **708**. The third opening **742** may be spaced apart from the fourth opening **744** and extend from a top surface **702** to a bottom surface **704** of the cut guide **700**. The openings **742**, **744** may extend through the second arm **740**, for example, parallel to the extension member **728**, angled as they extend from the top surface **702** toward the bottom surface **704**, or a combination of parallel and angled. In one embodiment, the third opening **742** may extend, for example, parallel to the extension member **728** and the fourth opening **744** may be, for example, angled with respect to the extension member **728** to permit inserted wires, guide wires, k-wires, and the like to cross above the cut guide **700** without intersecting. By positioning the open-

ings **742**, **744** such that the inserted wires cross above the openings **742**, **744** allows for a smaller surgical incision and less interaction or interference with other instruments during the procedure. The openings **742**, **744** being positioned for the wires to cross, also allows for the cut guide **700** to be, for example, suspended above and/or mated with the bone surfaces being cut. Suspending the cut guide **700** above the bone surfaces prevents the cut guide **700** from being angled because of varying patient anatomy which results in not having to move the slots **716**, **718**, **720**, **722** which would affect the proposed cut angles. In one embodiment, the openings **732**, **742** may be, for example, positioned such that they are parallel to one another as they extend between the top and bottom surfaces **702**, **704**. By positioning the openings **732**, **742** parallel to each other, the cut guide **700** may be, for example, removed from guide wires inserted through openings **732**, **742** without removing the guide wires. In addition, parallel openings **732**, **742** allow for the relative rotation between the two guide wires to be measured or calculated after the bones are cut using cut guide **700**. Further, the openings **732**, **742** may be, for example, spaced apart from the extension member **728** a standard or set distance to allow for interchangeability with alternative cut guides **800**, **900**, **1000**, if a different or additional resection is needed. Alternative, combinations of orientations of the openings **742**, **744** are also contemplated, as would be understood by one of ordinary skill in the art from the above description. The second arm **740** may be shaped to provide a bone contacting surface **746** that corresponds to the shape of the bone that it will engage. The second arm **740** may be, for example, curved or arced as it extends between the first side **710** and the second side **712**. The second arm **740** may have, for example, a larger length than the first arm **730**.

Referring now to FIGS. **83** and **84**, another cut guide **750** is shown. The cut guide **750** is a mirror image of the cut guide **700** in a medial-lateral direction, which will not be described again in full detail for brevity purposes. For example, the hole **724** is positioned on a left side of the cut guide **700** when in an insertion position and the hole **774** is positioned on a right side of the cut guide **750** when in an insertion position. The cut guide **750** may be, for example, for a left foot. The cut guide **750** may include a top surface **752**, a bottom surface **754**, a first or proximal end **756**, a second or distal end **758**, a first or medial side **760**, and a second or lateral side **762**, which may be of the type described above with respect to the top surface **702**, the bottom surface **704**, the first or proximal end **706**, the second or distal end **708**, the first or medial side **710**, and the second or lateral side **712**, respectively. The cut guide **750** may also include a base portion **764** which may be the mirror image of the base portion **714**, as described above. The slots **766**, **768**, **770**, **772**, the hole **774**, and the recessed region **776** may be the same or similar to the slots **716**, **718**, **720**, **722**, the hole **724**, and the recessed region **726**, as described in greater detail above. Further, the cut guide **750** may include a fin, paddle or extension member **778**, a first or proximal arm **780**, and a second or distal arm **790**, which may be as described above with respect to the extension member **728**, the first arm **730**, and the second arm **740**, respectively. The coupling portion **788**, the openings **782**, **784** and the bone contacting surface **786** may be as described above with reference to the coupling portion **738**, the openings **732**, **734** and the bone contacting surface **736** and the coupling portion **798**, the openings **792**, **794** and the bone contacting surface **796** may be as described above with reference to the coupling portion **748**, the openings **742**, **744** and the bone contacting surface **746**, which will not be described again here for brevity purposes.

Referring now to FIGS. **85-92**, another cut guide **800** is shown. The cut guide **800** includes a top surface **802**, a bottom surface **804**, a first or proximal end **806**, a second or distal end **808**, a first or medial side **810**, and a second or lateral side **812**. The cut guide **800** also includes a base portion **814**, a paddle, fin or extension member **828** extending away from the bottom surface **804** of the base portion **814**, a first or proximal arm **830** extending away from the base portion **814** on the first end **806**, and a second or distal arm **840** extending away from the base portion **814** on the second end **808**. The cut guide **800** may be, for example, a right foot cut guide.

As shown in FIGS. **85**, **89** and **90**, the top surface **802** of the base portion **814** may be, for example, curved or arced between the first side **810** and the second side **812**. In one embodiment, the top surface **802** of the base portion **814** may include, for example, a flat or planar portion positioned between a first curvature or arc extending from the first side **810** to the flat portion and a second curvature or arc extending from a second side **812** to the flat portion. The end of the base portion **814** near the first end **806** of the cut guide **800** may be, for example, angled from the first side **810** to the second side **812**, as shown in FIG. **91**. The end of the base portion **814** near the second end **808** of the cut guide **800** may extend, for example, perpendicularly between the first side **810** and the second side **812**, as shown in FIG. **91**.

The base portion **814** also includes at least one slot **816**, **818**, **820**, **822**, as shown in FIGS. **85-88**, **91** and **92**. In the depicted embodiment, the base portion **814** includes a first slot **816** adjacent to a second slot **818** and a third slot **820** adjacent to a fourth slot **822**. The first and second slots **816**, **818** are positioned on the base portion **814** near the second end **808** of the cut guide **800** and the third and fourth slots **820**, **822** are positioned on the base portion **814** near the first end **806** of the cut guide **800**. The slots **816**, **818**, **820**, **822** may extend, for example, linearly or angled through the base portion **814** from the top surface **802** to the bottom surface **804** of the cut guide **800**. The slots **816**, **818**, **820**, **822** may be, for example, angled approximately 1° to 4° and more specifically, approximately 2°, as the slots **816**, **818**, **820**, **822** extend between the top and bottom surfaces **802**, **804**. It is also contemplated that some of slots **816**, **818**, **820**, **822** may be angled and other slots **816**, **818**, **820**, **822** may be linear as they extend through the base portion **814** from the top surface **802** to the bottom surface **804**.

In addition, the slots **816**, **818** may be oriented, for example, relatively perpendicular to the first side **810** and the second side **812** as the slots **816**, **818** extend from the first side **810** to the second side **812**, as shown in FIGS. **85-88**, **91** and **92**. The slots **820**, **822** may be, for example, angled as the slots **820**, **822** extend between the first side **810** to the second side **812**. The slots **820**, **822** may also be, for example, angled toward the slots **816**, **818**, as the slots **820**, **822** extend from the first side **810** to the second side **812**. The slots **820**, **822** may also be positioned to extend parallel to the end of the base portion **814** near the first end **806** of the cut guide **800**. The slots **820**, **822** may be, for example, angled between approximately 8° and 22° as the slots **820**, **822** extend from the second side **812** to the first side **810** providing for an angulation correction of 8° to 20°. The slots **816**, **818**, **820**, **822** may be configured or sized and shaped to receive a saw blade and may have a width of, for example, approximately 0.58 mm to 0.92 mm. The slots **816**, **818**, **820**, **822** may be positioned, for example, to allow for

removal of the articular cartilage layer at the ends of the two bones. To prevent resecting more tissue than absolutely necessary, the slots **816**, **818**, **820**, **822** may be positioned, for example, such that the medial portion of the slots **816**, **818**, **820**, **822** are aligned with the intersection of the cartilage and bone.

The base portion **814** may also include a hole or dorsal hole **824**, as shown in at least FIGS. **85**, **86**, and **88-91**. The hole **824** is positioned between the second slot **818** and the third slot **820** near the second side **812** of the base portion **814**. The hole **824** may extend, for example, into the base portion **814** from the top surface **802** of the cut guide **800** and to a point within the extension member **828**. As shown in FIGS. **86**, **89**, **90** and **92**, as the hole **824** extends into the extension member **828**, the hole **824** forms an opening in a proximal-distal direction through the extension member **828**. The hole **824** may, for example, extend into the cut guide **800** parallel to the angled portion of the extension member **828**, as shown in FIG. **86**. The hole **824** may be sized and shaped or configured, for example, to receive a wire, alignment wire, k-wire, guide wire or the like to provide information on the position of the cut guide **800** in a joint. For example, a wire inserted into hole **824** should align approximately with the long axis of the patient's tibia to provide the proper orientation of the cut guide **800** in the joint, which may be, for example, approximately 45° from dorsal and 45° from medial in the frontal plane.

Referring now to FIGS. **86-88** and **92**, the base portion **814** also includes a recessed region **826** positioned on the bottom surface **804**. The recessed region **826** extends from the first side **810** to the second side **812** and into the base portion **814** from the bottom surface **804** toward the top surface **802**. The recessed region **826** extends to engage the bone contacting surface **836** of the first arm **830** at the first side **810** of the base portion **814**. The extension member **828** is coupled to the recessed region **826** of the base portion **814** and extends away from the recessed region **826** of the base portion **814**. In addition, the extension member **828** is positioned between the second slot **818** and the third slot **820**. The extension member **828** also extends from the second side **812** toward the first side **810**, as shown in FIGS. **86**, **89**, **90** and **92**. The extension member **828** may include a perpendicular portion near the first side **810** that extends perpendicularly away from the bottom surface **804**. The perpendicular portion of the extension member **828** may be, for example, angled when the cut guide **800** is inserted into a patient's joint and the angle that the perpendicular portion is positioned at may correspond to the angle of the first tarso-metatarsal joint medially. The extension member **828** may also include an angled portion extending from the second side **812** to the end or distal end of the extension member **828**. The extension member **828** may be shaped, for example, to fit within the joint space between two bones, such as, a first metatarsal and cuneiform, as well as to mate with the articular joints. The angled portion of the extension member **828** may, for example, be oriented laterally and should align with the long axis of the tibia, as well as fit within the joint to rest against the relatively straight surface of the adjacent bone, for example, the second metatarsal. When the angled portion of the extension member **828** is oriented against the second metatarsal, the cut guide **800** will be positioned at a 45° angle in the frontal plane.

As shown in FIGS. **85**, **86**, **91** and **92**, the first or proximal arm **830** may extend away from an end of the base portion **814** and may have, for example, a first portion extending from the base portion **814** to a coupling portion **838** positioned at the first end **806** of the cut guide **800**. The coupling portion **838** may have a width larger than the width of the first portion of the first arm **830**. The coupling portion **838** of the first arm **830** includes at least one opening **832**, **834**. In the depicted embodiment, the first arm **830** includes a first opening **832** and a second opening **834** positioned near the first end **806**. The first opening **832** may be spaced apart from the second opening **834**. The openings **832**, **834** may extend from a top surface **802** to a bottom surface **804** of the coupling portion **838** of the cut guide **800**. The openings **832**, **834** may extend through the coupling portion **838** of the first arm **830**, for example, parallel to the extension member **828**, angled as they extend from the top surface **802** toward the bottom surface **804**, or a combination of parallel and angled. In one embodiment, the first opening **832** may extend, for example, parallel to the extension member **828** and the second opening **834** may be, for example, angled with respect to the extension member **828** to permit the inserted wires, guide wires, k-wires and the like to cross above the cut guide **800** without intersecting. By positioning the openings **832**, **834** such that inserted wires cross above the openings **832**, **834** allows for a smaller surgical incision and less interaction or interference with other instruments during the procedure. The openings **832**, **834** positioning the wires to cross also allows for the cut guide **800** to be, for example, suspended above and/or proximate to the bone surfaces being cut. The ability to suspend the cut guide **800** above the bone surfaces prevents the cut guide **800** from being titled because of varying patient anatomy and this avoids moving the slots **816**, **818**, **820**, **822** which would affect the proposed cut angles. Alternative combinations of orientations of the openings **832**, **834** are also contemplated, as would be understood by one of ordinary skill in the art from the above description. The first arm **830** may be shaped to provide a bone contacting surface **836** that corresponds to the shape of the bone that it will engage. The first arm **830** may be, for example, curved or arced as it extends between the first side **810** and the second side **812**.

As shown in FIGS. **85**, **86**, **91** and **92**, the second or distal arm **840** may extend away from an end of the base portion **814** and may have, for example, a first portion extending from the base portion **814** to a coupling portion **848** positioned at the second end **808** of the cut guide **800**. The coupling portion **848** may have a width larger than the width of the first portion of the second arm **840**. The coupling portion **848** of the second arm **840** includes at least one opening **842**, **844**. In the depicted embodiment, the second arm **840** includes a third opening **842** and a fourth opening **844** positioned near the second end **808**. The third opening **842** may be spaced apart from the fourth opening **844** and extend from a top surface **802** to a bottom surface **804** of the cut guide **800**. The openings **842**, **844** may extend through the second arm **840**, for example, parallel to the extension member **828**, angled as they extend from the top surface **802** toward the bottom surface **804**, or a combination of parallel and angled. In one embodiment, the third opening **842** may extend, for example, parallel to the extension member **828** and the fourth opening **844** may be, for example, angled with respect to the extension member **828** to permit inserted wires, guide wires, k-wires, and the like to cross above the cut guide **800** without intersecting. By positioning the openings **842**, **844** such that the inserted wires cross above the openings **842**, **844** allows for a smaller surgical incision and less interaction or interference with other instruments during the procedure. The openings **842**, **844** being positioned for the wires to cross, also allows for the cut guide **800** to be, for example, suspended above and/or mated with the bone surfaces being cut. Suspending the cut guide **800** above the

bone surfaces prevents the cut guide **800** from being angled because of varying patient anatomy which results in not having to move the slots **816**, **818**, **820**, **822** which would affect the proposed cut angles. In one embodiment, the openings **832**, **842** may be, for example, positioned such that they are parallel to one another as they extend between the top and bottom surfaces **802**, **804**. By positioning the openings **832**, **842** parallel to each other, the cut guide **800** may be, for example, removed from guide wires inserted through openings **832**, **842** without removing the guide wires. In addition, parallel openings **832**, **842** allow for the relative rotation between the two guide wires to be measured or calculated after the bones are cut using cut guide **800**. Further, the openings **832**, **842** may be, for example, spaced apart from the extension member **828** a standard or set distance to allow for interchangeability with alternative cut guides **700**, **900**, **1000**, if a different or additional resection is needed. Alternative, combinations of orientations of the openings **842**, **844** are also contemplated, as would be understood by one of ordinary skill in the art from the above description. The second arm **840** may be shaped to provide a bone contacting surface **846** that corresponds to the shape of the bone that it will engage. The second arm **840** may be, for example, curved or arced as it extends between the first side **810** and the second side **812**. The second arm **840** may have, for example, a larger length than the first arm **830**.

Another cut guide **850** is shown in FIGS. **93** and **94**. The cut guide **850** is a mirror image of the cut guide **800** in a medial-lateral direction, which will not be described again in full detail for brevity purposes. For example, the hole **824** is positioned on a left side of the cut guide **800** when in an insertion position and the hole **874** is positioned on a right side of the cut guide **850** when in an insertion position. The cut guide **850** may be, for example, for a left foot. The cut guide **850** may include a top surface **852**, a bottom surface **854**, a first or proximal end **856**, a second or distal end **858**, a first or medial side **860**, and a second or lateral side **862**, which may be of the type described above with respect to the top surface **802**, the bottom surface **804**, the first or proximal end **806**, the second or distal end **808**, the first or medial side **810**, and the second or lateral side **812**, respectively. The cut guide **850** may also include a base portion **864** which may be the mirror image of the base portion **814**, as described above. The slots **866**, **868**, **870**, **872**, the hole **874**, and the recessed region **876** may be the same or similar to the slots **816**, **818**, **820**, **822**, the hole **824**, and the recessed region **826**, as described in greater detail above. Further, the cut guide **850** may include a fin, paddle or extension member **878**, a first or proximal arm **880**, and a second or distal arm **890**, which may be as described above with respect to the extension member **828**, the first arm **830**, and the second arm **840**, respectively. The coupling portion **888**, the openings **882**, **884** and the bone contacting surface **886** may be as described above with reference to the coupling portion **838**, the openings **832**, **834** and the bone contacting surface **836** and the coupling portion **898**, the openings **892**, **894** and the bone contacting surface **896** may be as described above with reference to the coupling portion **848**, the openings **842**, **844** and the bone contacting surface **846**, which will not be described again here for brevity purposes.

Referring now to FIGS. **95-102**, a cut guide **900** is shown. The cut guide **900** includes a top surface **902**, a bottom surface **904**, a first or proximal end **906**, a second or distal end **908**, a first or medial side **910**, and a second or lateral side **912**. The cut guide **900** also includes a base portion **914**, a paddle, fin or extension member **928** extending away from the bottom surface **904** of the base portion **914**, a first or proximal arm **930** extending away from the base portion **914** on the first end **906**, and a second or distal arm **940** extending away from the base portion **914** on the second end **908**. The cut guide **900** may be, for example, a right foot cut guide.

As shown in FIGS. **95**, **99** and **100**, the top surface **902** of the base portion **914** may be, for example, curved or arced between the first side **910** and the second side **912**. In one embodiment, the top surface **902** of the base portion **914** may include, for example, a flat or planar portion positioned between a first curvature or arc extending from the first side **910** to the flat portion and a second curvature or arc extending from a second side **912** to the flat portion. The end of the base portion **914** near the first end **906** of the cut guide **900** may extend, for example, perpendicularly between the first side **910** to the second side **912**, as shown in FIG. **101**. The end of the base portion **914** near the second end **908** of the cut guide **900** may extend, for example, perpendicularly between the first side **910** and the second side **912**, as shown in FIG. **101**.

The base portion **914** also includes at least one slot **916**, **918**, **920**, **922**, as shown in FIGS. **89-98**, **101** and **102**. In the depicted embodiment, the base portion **914** includes a first slot **916** adjacent to a second slot **918** and a third slot **920** adjacent to a fourth slot **922**. The first and second slots **916**, **918** are positioned on the base portion **914** near the second end **908** of the cut guide **900** and the third and fourth slots **920**, **922** are positioned on the base portion **914** near the first end **906** of the cut guide **900**. The slots **916**, **918**, **920**, **922** may extend, for example, linearly or angled through the base portion **914** from the top surface **902** to the bottom surface **904** of the cut guide **900**. The slots **916**, **918**, **920**, **922** may be, for example, angled approximately 1° to 4° and more specifically, approximately 2°, as the slots **916**, **918**, **920**, **922** extend between the top and bottom surfaces **902**, **904**. It is also contemplated that some of slots **916**, **918**, **920**, **922** may be angled and other slots **916**, **918**, **920**, **922** may be linear as they extend through the base portion **914** from the top surface **902** to the bottom surface **904**.

In addition, the slots **916**, **918** may be oriented, for example, relatively perpendicular to the first side **910** and the second side **912** as the slots **916**, **918** extend from the first side **910** to the second side **912**, as shown in FIGS. **95-98**, **101** and **102**. The slots **916**, **918** may also be positioned to extend parallel to the end of the base portion **914** near the second end **908** of the cut guide **900**. The slots **920**, **922** may also be oriented, for example, relatively perpendicular to the first side **910** and the second side **912** as the slots **920**, **922** extend from the first side **910** to the second side **912**. The slots **920**, **922** may also be positioned to extend parallel to the end of the base portion **914** near the first end **906** of the cut guide **900**. The slots **916**, **918**, **920**, **922** may be, for example, angled approximately 0° to 30° as the slots **916**, **918**, **920**, **922** extend from the second side **912** to the first side **910** providing for an angulation correction of 4° to 20°. The slots **916**, **918**, **920**, **922** may be configured or sized and shaped to receive a saw blade and may have a width of, for example, approximately 0.58 mm to 0.92 mm. The slots **916**, **918**, **920**, **922** may be positioned, for example, to allow for removal of the articular cartilage layer at the ends of the two bones. To prevent resecting more tissue than absolutely necessary, the slots **916**, **918**, **920**, **922** may be positioned, for example, such that the medial portion of the slots **916**, **918**, **920**, **922** are aligned with the intersection of the cartilage and bone.

The base portion **914** may also include a hole or dorsal hole **924**, as shown in at least FIGS. **95**, **96**, and **98-101**. The

hole **924** is positioned between the second slot **918** and the third slot **920** near the second side **912** of the base portion **914**. The hole **924** may extend, for example, into the base portion **914** from the top surface **902** of the cut guide **900** and to a point within the extension member **928**. As shown in FIGS. **96**, **99**, **100** and **102**, as the hole **924** extends into the extension member **928**, the hole **924** forms an opening in a proximal-distal direction through the extension member **928**. The hole **924** may, for example, extend into the cut guide **900** parallel to the angled portion of the extension member **928**, as shown in FIG. **96**. The hole **924** may be sized and shaped or configured, for example, to receive a wire, alignment wire, k-wire, guide wire or the like to provide information on the position of the cut guide **900** in a joint. For example, a wire inserted into hole **924** should align approximately with the long axis of the patient's tibia to provide the proper orientation of the cut guide **900** in the joint, which may be, for example, approximately 45° from dorsal and 45° from medial in the frontal plane.

Referring now to FIGS. **96-98** and **102**, the base portion **914** also includes a recessed region **926** positioned on the bottom surface **904**. The recessed region **926** extends from the first side **910** to the second side **912** and into the base portion **914** from the bottom surface **904** toward the top surface **902**. The recessed region **926** extends to engage the bone contacting surface **936** of the first arm **930** at the first side **910** of the base portion **914**. The extension member **928** is coupled to the recessed region **926** of the base portion **914** and extends away from the recessed region **926** of the base portion **914**. In addition, the extension member **928** is positioned between the second slot **918** and the third slot **920**. The extension member **928** also extends from the second side **912** toward the first side **910**, as shown in FIGS. **96**, **99**, **100** and **102**. The extension member **928** may include a perpendicular portion near the first side **910** that extends perpendicularly away from the bottom surface **904**. The perpendicular portion of the extension member **928** may be, for example, angled when the cut guide **900** is inserted into a patient's joint and the angle that the perpendicular portion is positioned at may correspond to the angle of the first tarso-metatarsal joint medially. The extension member **928** may also include an angled portion extending from the second side **912** to the end or distal end of the extension member **928**. The extension member **928** may be shaped, for example, to fit within the joint space between two bones, such as, a first metatarsal and cuneiform, as well as to mate with the articular joints. The angled portion of the extension member **928** may, for example, be oriented laterally and should align with the long axis of the tibia, as well as fit within the joint to rest against the relatively straight surface of the adjacent bone, for example, the second metatarsal. When the angled portion of the extension member **928** is oriented against the second metatarsal, the cut guide **900** will be positioned at a 45° angle in the frontal plane.

As shown in FIGS. **95**, **96**, **101** and **102**, the first or proximal arm **930** may extend away from an end of the base portion **914** and may have, for example, a first portion extending from the base portion **914** to a coupling portion **938** positioned at the first end **906** of the cut guide **900**. The coupling portion **938** may have a width larger than the width of the first portion of the first arm **930**. The coupling portion **938** of the first arm **930** includes at least one opening **932**, **934**. In the depicted embodiment, the first arm **930** includes a first opening **932** and a second opening **934** positioned near the first end **906**. The first opening **932** may be spaced apart from the second opening **934**. The openings **932**, **934** may extend from a top surface **902** to a bottom surface **904** of the coupling portion **938** of the cut guide **900**. The openings **932**, **934** may extend through the coupling portion **938** of the first arm **930**, for example, parallel to the extension member **928**, angled as they extend from the top surface **902** toward the bottom surface **904**, or a combination of parallel and angled. In one embodiment, the first opening **932** may extend, for example, parallel to the extension member **928** and the second opening **934** may be, for example, angled with respect to the extension member **928** to permit the inserted wires, guide wires, k-wires and the like to cross above the cut guide **900** without intersecting. By positioning the openings **932**, **934** such that inserted wires cross above the openings **932**, **934** allows for a smaller surgical incision and less interaction or interference with other instruments during the procedure. The openings **932**, **934** positioning the wires to cross also allows for the cut guide **900** to be, for example, suspended above and/or proximate to the bone surfaces being cut. The ability to suspend the cut guide **900** above the bone surfaces prevents the cut guide **900** from being titled because of varying patient anatomy and this avoids moving the slots **916**, **918**, **920**, **922** which would affect the proposed cut angles. Alternative combinations of orientations of the openings **932**, **934** are also contemplated, as would be understood by one of ordinary skill in the art from the above description. The first arm **930** may be shaped to provide a bone contacting surface **936** that corresponds to the shape of the bone that it will engage. The first arm **930** may be, for example, curved or arced as it extends between the first side **910** and the second side **912**.

As shown in FIGS. **95**, **96**, **101** and **102**, the second or distal arm **940** may extend away from an end of the base portion **914** and may have, for example, a first portion extending from the base portion **914** to a coupling portion **948** positioned at the second end **908** of the cut guide **900**. The coupling portion **948** may have a width larger than the width of the first portion of the second arm **940**. The coupling portion **948** of the second arm **940** includes at least one opening **942**, **944**. In the depicted embodiment, the second arm **940** includes a third opening **942** and a fourth opening **944** positioned near the second end **908**. The third opening **942** may be spaced apart from the fourth opening **944** and extend from a top surface **902** to a bottom surface **904** of the cut guide **900**. The openings **942**, **944** may extend through the second arm **940**, for example, parallel to the extension member **928**, angled as they extend from the top surface **902** toward the bottom surface **904**, or a combination of parallel and angled. In one embodiment, the third opening **942** may extend, for example, parallel to the extension member **928** and the fourth opening **944** may be, for example, angled with respect to the extension member **928** to permit inserted wires, guide wires, k-wires, and the like to cross above the cut guide **900** without intersecting. By positioning the openings **942**, **944** such that the inserted wires cross above the openings **942**, **944** allows for a smaller surgical incision and less interaction or interference with other instruments during the procedure. The openings **942**, **944** being positioned for the wires to cross, also allows for the cut guide **900** to be, for example, suspended above and/or mated with the bone surfaces being cut. Suspending the cut guide **900** above the bone surfaces prevents the cut guide **900** from being angled because of varying patient anatomy which results in not having to move the slots **916**, **918**, **920**, **922** which would affect the proposed cut angles. In one embodiment, the openings **932**, **942** may be, for example, positioned such that they are parallel to one another as they extend between the top and bottom surfaces **902**, **904**. By positioning the openings **932**, **942** parallel to

each other, the cut guide **900** may be, for example, removed from guide wires inserted through openings **932**, **942** without removing the guide wires. In addition, parallel openings **932**, **942** allow for the relative rotation between the two guide wires to be measured or calculated after the bones are cut using cut guide **900**. Further, the openings **932**, **942** may be, for example, spaced apart from the extension member **928** a standard or set distance to allow for interchangeability with alternative cut guides **700**, **800**, **1000**, if a different or additional resection is needed. Alternative, combinations of orientations of the openings **942**, **944** are also contemplated, as would be understood by one of ordinary skill in the art from the above description. The second arm **940** may be shaped to provide a bone contacting surface **946** that corresponds to the shape of the bone that it will engage. The second arm **940** may be, for example, curved or arced as it extends between the first side **910** and the second side **912**. The second arm **940** may have, for example, a larger length than the first arm **930**.

FIGS. **103** and **104** show another cut guide **950**. Another cut guide **950** is shown in FIGS. **103** and **104**. The cut guide **950** is a mirror image of the cut guide **900** in a medial-lateral direction, which will not be described again in full detail for brevity purposes. For example, the hole **924** is positioned on a left side of the cut guide **900** when in an insertion position and the hole **974** is positioned on a right side of the cut guide **950** when in an insertion position. The cut guide **950** may be, for example, for a left foot. The cut guide **950** may include a top surface **952**, a bottom surface **954**, a first or proximal end **956**, a second or distal end **958**, a first or medial side **960**, and a second or lateral side **962**, which may be of the type described above with respect to the top surface **902**, the bottom surface **904**, the first or proximal end **906**, the second or distal end **908**, the first or medial side **910**, and the second or lateral side **912**, respectively. The cut guide **950** may also include a base portion **964** which may be the mirror image of the base portion **914**, as described above. The slots **966**, **968**, **970**, **972**, the hole **974**, and the recessed region **976** may be the same or similar to the slots **916**, **918**, **920**, **922**, the hole **924**, and the recessed region **926**, as described in greater detail above. Further, the cut guide **950** may include a fin, paddle or extension member **978**, a first or proximal arm **980**, and a second or distal arm **990**, which may be as described above with respect to the extension member **928**, the first arm **930**, and the second arm **940**, respectively. The coupling portion **988**, the openings **982**, **984** and the bone contacting surface **986** may be as described above with reference to the coupling portion **938**, the openings **932**, **934** and the bone contacting surface **936** and the coupling portion **998**, the openings **992**, **994** and the bone contacting surface **996** may be as described above with reference to the coupling portion **948**, the openings **942**, **944** and the bone contacting surface **946**, which will not be described again here for brevity purposes.

Referring now to FIGS. **105-112**, a cut guide **1000** is shown. The cut guide **1000** includes a top surface **1002**, a bottom surface **1004**, a first end **1006**, a second end **1008**, a first side **1010**, and a second side **1012**. The first end **1006** may be, for example, a proximal end, and the second end **1008** may be, for example, a distal end, or vice versa. The first side **1010** may be, for example, a medial side, and the second side **1012** may be, for example, a lateral side, or vice versa. The cut guide **1000** also includes a base portion **1014**, a paddle, fin or extension member **1022** extending away from the bottom surface **1004** of the base portion **1014**, and an arm **1030** extending away from the base portion **1014** on the second end **1008**. As shown in FIGS. **105-112**, the cut guide **1000** may be, for example, a right foot cut guide. The cut guide **1000** may provide, for example, a 4° angulation from dorsal to plantar on the metatarsal.

Cut guide **1000** may be used, for example, when a surgeon decides that correction of the first metatarsal in plantarflexion is not sufficient enough and needs to take off more of the metatarsal from the dorsal to plantar direction. Alternatively, cut guide **1000** may be used, for example, when a surgeon knows from pre-operative radiographs that the first ray is dorsiflexed in order to cut more bone of the metatarsal plantarly to correct the dorsiflexion. For example, when guide **1000** is used, it will be inserted into the patient's joint, the surgeon will use cut guide **1000** to cut the first metatarsal, then cut guide **1000** will be removed and replaced with another cut guide, such as, cut guide **700**, **800**, **900**, to cut the cuneiform. The second guide **700**, **800**, **900** will be selected based on the size and desired angular correction of the cuneiform. The cut guide **1000** may be removed from the patient's bones, for example, by sliding the guide **1000** off a guide wire inserted through the opening **1032** and inserting the second cut guide **700**, **800**, **900** onto the guide wire to properly align the second cut guide **700**, **800**, **900** on the patient's bones with respect to the first cut made to the metatarsal.

As shown in FIGS. **105**, **109** and **110**, the top surface **1002** of the base portion **1014** may be, for example, curved or arced between the first side **1010** and the second side **1012**. In an embodiment, the top surface **1002** of the base portion **1014** may include, for example, a flat or planar portion positioned between a first curvature or arc extending from the first side **1010** to the flat portion and a second curvature or arc extending from the second side **1012** to the flat portion. The base portion **1014** also includes at least one slot **1016**, **1018**, as shown in FIGS. **105-108**, **111** and **112**. In the depicted embodiment, the first slot **1016** is positioned adjacent to a second slot **1018**. The slots **1016**, **1018** may extend, for example, through the base portion **1014** from the top surface **1002** to the bottom surface **1004** of the cut guide **1000**. The slots **1016**, **1018** may be, for example, angled as the slots **1016**, **1018** extend from the top surface **1002** to the bottom surface **1004**. The slots **1016**, **1018** may be angled, for example, approximately 1° to 4° and more specifically, approximately 2°, as the slots **1016**, **1018** extend between the top surface **1002** and the bottom surface **1004**. It is also contemplated that the interior slot **1016** may be angled while the exterior slot **1018** may be linear as they extend between the top and bottom surfaces **1002**, **1004**.

In addition, the slots **1016**, **1018** may be angled as they extend across the base portion **1014** from the first side **1010** to the second side **1012**, as shown in FIGS. **111** and **112**. The slots **1016**, **1018** may be, for example, angled at approximately 6° as they extend between the first and second sides **1010**, **1012** providing for an angulation correction of 4°. The slots **1016**, **1018** may be configured or sized and shaped to receive a saw blade and may have a width of, for example, approximately 0.58 mm to 0.92 mm. As shown in FIG. **111**, the slots **1016**, **1018** may be angled from a distal-medial position to a proximal-lateral position of the cut guide **1000**. The slots **1016**, **1018** may be positioned, for example, to allow for removal of the articular cartilage only. To prevent resecting too much tissue, the slots **1016**, **1018** may be positioned, for example, such that the medial portion of the slots **1016**, **1018** are aligned with the cartilage and bone boundary.

The base portion **1014** also includes a hole or dorsal hole **1020**, as shown in at least FIGS. **105-107**, **111** and **112**. The hole **1020** is positioned between the second slot **1018** and the

arm **1030**. The hole **1020** may extend, for example, through the base portion **1014** from the top surface **1002** to the bottom surface **1004**. The hole **1020** may, for example, extend through the base portion **1014** of the cut guide **1000** parallel to the angled portion of the extension member **1022**, as shown in FIG. **105**. The hole **1020** may be sized and shaped or configured, for example, to receive a wire, alignment wire, k-wire, guide wire, directional wire or the like to provide information on the position of the cut guide **1000** in a joint. For example, the wire inserted into hole **1020** should align approximately with the long axis of the tibia to provide the proper orientation of the cut guide **1000** in the joint, which may be, for example, approximately 45° from dorsal and 45° from medial in the frontal plane.

Referring now to FIGS. **106-110** and **112**, the extension member **1022** is attached to a bottom surface **1004** of the base portion **1014**. The extension member **1022** also extends away from the base portion **1014** and is positioned on the first end **1006** of the cut guide **1000**. In addition, the extension member **1022** extends from the second side **1012** toward the first side **1010**, as shown in at least FIGS. **106**, **109** and **110**. The extension member **1022** may include a portion near the first side **1010** that extends perpendicularly away from the bottom surface **1004**. The perpendicular portion of the extension member **1022** may be, for example, angled when the cut guide **1000** is inserted into a patient's joint and the angle that the perpendicular portion is positioned at may correspond to the angle of the first tarsometatarsal joint medially. The extension member **1022** may also include an angled portion extending from the second side **1012** to the end of the extension member **1022**. The extension member **1022** may be shaped, for example, to fit within the joint space between the two bones, such as, a first metatarsal and cuneiform, as well as to mate with the two sides of an articular joint. The angled portion of the extension member **1022** may, for example, be oriented laterally and should align with the long axis of the tibia, as well as fit within the joint to rest against the relatively straight surface of the adjacent bone, for example, the second metatarsal. When the angled portion of the extension member **1022** is oriented against the second metatarsal, the cut guide **1000** will be positioned at a 45° angle in the frontal plane.

As shown in FIGS. **105-108** and **110-112**, the arm **1030** may extend away from an end of the base portion **1014** and may have, for example, a first portion extending from the base portion **1014** to a coupling portion **1038** positioned at the first end **1006** of the cut guide **1000**. The coupling portion **1038** may have a width larger than the width of the first portion of the arm **1030**. The coupling portion **1038** of the arm **1030** includes at least one opening **1032**, **1034**. In the depicted embodiment, the arm **1030** includes a first opening **1032** and a second opening **1034** positioned near the first end **1006**. The first opening **1032** may be spaced apart from the second opening **1034**. The openings **1032**, **1034** may extend from a top surface **1002** to a bottom surface **1004** of the coupling portion **1038** of the cut guide **1000**. The openings **1032**, **1034** may extend through the coupling portion **1038** of the arm **1030**, for example, parallel to the extension member **1028**, angled as they extend from the top surface **1002** toward the bottom surface **1004**, or a combination of parallel and angled. In one embodiment, the first opening **1032** may extend, for example, parallel to the extension member **1028** and the second opening **1034** may be, for example, angled with respect to the extension member **1028** to permit the inserted wires, guide wires, k-wires and the like to cross above the cut guide **1000** without intersecting. By positioning the openings **1032**, **1034** such that inserted wires cross above the openings **1032**, **1034** allows for a smaller surgical incision and less interaction or interference with other instruments during the procedure. The openings **1032**, **1034** positioning the wires to cross also allows for the cut guide **1000** to be, for example, suspended above and/or proximate to the bone surfaces being cut. The ability to suspend the cut guide **1000** above the bone surfaces prevents the cut guide **1000** from being titled because of varying patient anatomy and this avoids moving the slots **1016**, **1018** which would affect the proposed cut angles. Alternative combinations of orientations of the openings **1032**, **1034** are also contemplated, as would be understood by one of ordinary skill in the art from the above description. The arm **1030** may be shaped to provide a bone contacting surface **1036** that corresponds to the shape of the bone that it will engage. The arm **1030** may be, for example, curved or arced as it extends between the first side **1010** and the second side **1012**.

With reference to FIGS. **113** and **114** another cut guide **1050** is shown. As shown, the cut guide **1050** may be a mirror image of the cut guide **1000** in a medial-lateral direction, therefore, the cut guide **1050** will not be described in full detail for brevity purposes. Therefore, the cut guide **1050** may be, for example, for a left foot. The cut guide **1050** may include a top surface **1052**, a bottom surface **1054**, a first or proximal end **1056**, a second or distal end **1058**, a first or medial side **1060**, and a second or lateral side **1062**, which may be as described above with respect to the top surface **1002**, the bottom surface **1004**, the first or proximal end **1006**, the second or distal end **1008**, the first or medial side **1010**, and the second or lateral side **1012**, respectively, which will not be described again here for brevity sake. As the cut guide **1050** is a mirror image of the cut guide **1000**, the cut guide **1050** may also include a base portion **1064** which may be the mirror image of the base portion **1014** as described above. In addition, the hole **1020** is positioned on a left side of the cut guide **1000** when in an insertion position and the hole **1070** is positioned on the right side of the cut guide **1050** when in an insertion position. The slots **1066**, **1068** and the hole **1070** may be similar to the slots **1016**, **1018** and hole **1020**, as described in greater detail above. Specifically, as the cut guide **1050** is a mirror image of the cut guide **1000**, the slots **1066**, **1068** may be angled from a distal-lateral position to a proximal-medial position of the cut guide **1050** resulting in 4° of cumulative dorsal to plantar cutting, as described in greater detail above with reference to cut guide **1000**. Further, the cut guide **1050** may include a fin, paddle or extension member **1072** and an arm **1080**, which may be as described above with respect to the fin, paddle or extension member **1022** and the arm **1030**, respectively. The openings **1082**, **1084** and bone contacting surface **1086** may be as described above with reference to the openings **1032**, **1034** and bone contacting surface **1036**, which will not be described again here for brevity purposes.

As may be recognized by those of ordinary skill in the art based on the teachings herein, numerous changes and modifications may be made to the above-described and other embodiments of the present disclosure without departing from the scope of the disclosure. The components of the guides and/or systems as disclosed in the specification, including the accompanying abstract and drawings, may be replaced by alternative component(s) or feature(s), such as those disclosed in another embodiment, which serve the same, equivalent or similar purpose as known by those skilled in the art to achieve the same, equivalent or similar results by such alternative component(s) or feature(s) to provide a similar function for the intended purpose. In

addition, the guides and systems may include more or fewer components or features than the embodiments as described and illustrated herein. For example, the components and features of FIGS. **1-8**, FIGS. **9-10**, FIGS. **11-18**, FIGS. **19-26**, FIGS. **27-34**, FIGS. **35-36**, and FIGS. **37-44**, FIGS. **66-74**, FIGS. **75-82**, FIGS. **83-84**, FIGS. **85-92**, FIGS. **93-94**, FIGS. **95-102**, FIGS. **103-104**, FIGS. **105-112** and FIGS. **113-114** may be used interchangeably and in alternative combinations as would be modified or altered by one of skill in the art. Accordingly, this detailed description of the currently-preferred embodiments is to be taken in an illustrative, as opposed to limiting of the disclosure.

The terminology used herein is for the purpose of describing particular embodiments only and is not intended to be limiting of the disclosure. As used herein, the singular forms "a", "an" and "the" are intended to include the plural forms as well, unless the context clearly indicates otherwise. It will be further understood that the terms "comprise" (and any form of comprise, such as "comprises" and "comprising"), "have" (and any form of have, such as "has", and "having"), "include" (and any form of include, such as "includes" and "including"), and "contain" (and any form of contain, such as "contains" and "containing") are open-ended linking verbs. As a result, a method or device that "comprises," "has," "includes," or "contains" one or more steps or elements possesses those one or more steps or elements, but is not limited to possessing only those one or more steps or elements. Likewise, a step of a method or an element of a device that "comprises," "has," "includes," or "contains" one or more features possesses those one or more features, but is not limited to possessing only those one or more features. Furthermore, a device or structure that is configured in a certain way is configured in at least that way, but may also be configured in ways that are not listed.

The disclosure has been described with reference to the preferred embodiments. It will be understood that the architectural and operational embodiments described herein are exemplary of a plurality of possible arrangements to provide the same general features, characteristics, and general system operation. Modifications and alterations will occur to others upon a reading and understanding of the preceding detailed description. It is intended that the disclosure be construed as including all such modifications and alterations.

What is claimed is:

1. A guide system, comprising:

a cut guide;

an alignment guide coupled to the cut guide, wherein the alignment guide comprises:

a base portion;

a first extension member extending away from a bottom surface of the base portion in a first direction, wherein the first extension member comprises:

a first portion with a first end and a second end, wherein the first end is coupled to the base portion;

a second portion with a first end and a second end, wherein the first end of the second portion is coupled to the second end of the first portion; and

a first engagement member with a first end and a second end, wherein the first end of the first engagement member is coupled to the second end of the second portion, and wherein the first engagement member couples to at least one slot of the cut guide; and

a second extension member extending away from the bottom surface of the base portion in a second direction, wherein the second extension member comprises:

a third portion with a first end and a second end, wherein the first end of the third portion is coupled to the base portion;

a fourth portion with a first end and a second end, wherein the first end of the fourth portion is coupled to the second end of the third portion; and

a second engagement member with a first end and a second end, wherein the first end of the second engagement member is coupled to the second end of the fourth portion, and wherein the second engagement member couples to the at least one slot of the cut guide; and

wherein the first extension member and the second extension member form a triangular shape positioned below the base portion of the alignment guide; and

a directional wire engaging a portion of the alignment guide.

2. The guide system of claim **1**, further comprising:

at least one wire for insertion through the cut guide.

3. The guide system of claim **1**, wherein the cut guide comprises:

a base portion;

an extension member extending away from a bottom surface of the base portion; and

at least one arm extending away from an end of the base portion.

4. The guide system of claim **3**, wherein the at least one slot extends between a first side and a second side of the base portion.

5. The guide system of claim **4**, wherein the at least one slot is two slots.

6. The guide system of claim **4**, wherein the at least one slot is four slots.

7. The guide system of claim **4**, wherein the at least one slot is angled as it extends from the second side to the first side of the base portion.

8. The guide system of claim **4**, wherein the at least one slot is angled as it extends from a top surface through the bottom surface of the base portion.

9. The guide system of claim **4**, wherein the base portion further comprises:

a hole extending into the base portion from a top surface.

10. The guide system of claim **9**, wherein the hole extends into the extension member.

11. The guide system of claim **3**, wherein the at least one arm comprises:

a first arm extending away from a first end of the base portion; and

a second arm extending away from a second end of the base portion.

12. The guide system of claim **11**, wherein the first arm comprises:

a first tapered body with a first end coupled to the first end of the base portion and a second end;

a first opening positioned near the second end of the first tapered body; and

a second opening positioned near the second end of the first tapered body and spaced apart from the first opening.

13. The guide system of claim **12**, wherein the first opening extends through the first arm from a top surface

through a bottom surface of the first arm and the first opening extends parallel to the extension member; and

wherein the second opening extends through the first arm from the top surface through the bottom surface and the second opening is angled relative to the extension member.

14. The guide system of claim **12**, wherein the second arm comprises:

a second tapered body with a first end coupled to the second end of the base portion and a second end;

a third opening positioned near the second end of the second tapered body; and

a fourth opening positioned near the second end of the second tapered body and spaced apart from the first opening.

15. The guide system of claim **14**, wherein the third opening extends through the second arm from a top surface through a bottom surface of the second arm and the second opening extends parallel to the extension member; and

wherein the fourth opening extends through the second arm from the top surface through the bottom surface and the fourth opening is angled relative to the extension member.

16. The guide system of claim **3**, wherein the base portion further comprises

a recessed region extending into the base portion from the bottom surface toward a top surface of the base portion.

17. The guide system of claim **1**, wherein the base portion of the alignment guide comprises:

at least one opening extending through the base portion from a first end to a second end.

18. The guide system of claim **17**, wherein the directional wire is inserted through an opening of the at least one opening of the alignment guide.

19. The guide system of claim **1**, further comprising:

a position rotation device.

20. A method for using a guide system, comprising:

obtaining a cut guide, wherein the cut guide comprises:

a base portion;

an extension member extending away from a bottom surface of the base portion; and

at least one arm extending away from an end of the base portion;

inserting the extension member into a joint space;

coupling an alignment guide to the cut guide;

inserting a directional wire into at least one opening in the alignment guide;

inserting a first wire into a hole in the cut guide and checking an orientation of the cut guide;

inserting at least two second wires through the at least one arm of the cut guide and into at least one bone;

removing the alignment guide and the first wire;

cutting at least one of a first bone and a second bone using at least one slot of the cut guide;

removing at least one of the at least two second wires from the at least one bone and the cut guide; and

moving the first and second bones to a desired correction.

21. The method of claim **20**, further comprising:

removing resected cartilage and bone from the joint space.

22. The method of claim **21**, wherein moving the first and second bones to the desired correction comprises:

sliding a rotation device over at least one second wire;

repositioning the rotation device to insert a third wire into a zero hole on the rotation device;

adding a fourth wire into an opening corresponding to an angle of correction;

removing a distal medial wire and the rotation device; and

rotating the bones to position the distal medial wire and a proximal medial wire parallel to each other.

23. The method of claim **22**, further comprising:

securing the first and second bones with a plate and at least two screws.

24. The method of claim **20**, wherein the first bone is a first metatarsal and the second bone is a cuneiform.

25. The method of claim **20**, wherein the at least one arm is a first arm with two openings and a second arm with two openings and wherein the at least two second wires is four wires for insertion through the two openings in the first arm and the two openings in the second arm.

26. The method of claim **20**, further comprising:

checking an angle of correction based on a position of the alignment guide and directional wire;

determining the cut guide is at least one of over-correcting or under-correcting;

removing the cut guide from the joint space;

selecting a second cut guide;

inserting an extension member of the second cut guide into the joint space; and

re-checking the angle of correction.

27. The method of claim **20**, further comprising:

inserting a second cut guide after the cut guide and at least one of the at least two second wires are removed from the bone, wherein the second cut guide is inserted over at least one of the at least two second wires remaining in at least one of the first bone and the second bone;

positioning the second cut guide on at least one of the first bone and the second bone, wherein an extension member of the second cut guide is positioned parallel to a cut bone surface; and

making an additional cut to remove additional bone or cartilage from at least one of the first bone and the second bone.

28. The method of claim **20**, wherein cutting at least one of a first bone and a second bone using at least one slot of the cut guide, comprises:

cutting the first bone using a first slot of the cut guide; and

cutting the second bone using a second slot of the cut guide.

29. The method of claim **20**, wherein cutting at least one of a first bone and a second bone using at least one slot of the cut guide, comprises:

cutting the first bone in a dorsal to plantar direction.

30. The method of claim **29**, further comprising:

obtaining a second cut guide, wherein the second cut guide comprises:

a second base portion;

a second extension member extending away from a bottom surface of the second base portion; and

at least one second arm extending away from an end of the second base portion;

inserting the second extension member into the joint space after the cut guide and at least one of the at least two second wires are removed from the first bone, wherein the second cut guide is inserted over at least one of the at least two second wires remaining in at least one of the first bone and the second bone;

inserting at least two third wires through the at least one second arm of the second cut guide and into at least one of the first and second bones;

cutting the second bone using at least one slot of the second cut guide;

removing at least one of the at least two third wires from the at least one of the first and second bones and the second cut guide.

31. The method of claim **20**, wherein inserting at least two second wires through the at least one arm of the cut guide and into at least one bone comprises:

inserting one second wire through a first opening in a first arm of the cut guide; and

inserting another second wire through a second opening in a second arm of the cut guide;

wherein the first opening is parallel to the second opening as the first and second openings extend through the first and second arms from a top surface to a bottom surface.

32. The method of claim **31**, wherein after removal of the cut guide from the first wire and at least one second wire, a second cut guide may be inserted over the first and at least one second wires and aligned on the first and second bones.

33. The method of claim **31**, wherein after removal of the cut guide from the first wire and the at least one second wire, a rotation device may be slid over at least one of the first and the at least one second wires.

* * * * *