Europaisches Patentamt
(19) [LOGO] European Patent Office
Office européen des brevets

[bar code]

(11) EP 1 508 316 A1

(12) **EUROPEAN PATENT APPLICATION**

(43) Date of publication:
02/23/2005 Bulletin 2005/08

(51) Int Cl.7: **A61F 2/42**

(21) Application number: **04290319.5**

(22) Date of filing: **02/06/2004**

(84) Designated contracting states:
AT BE BG CH CY CZ DE DK EE ES FI FR GB GR HU IE IT LI LU MC NL PT RO SE SI SK TR
Designated extension states:
AL LT LV MK

(30) Priority: **08/06/2003 FR 0309707**

(71) Applicants:
- **Depuy France**
  69800 Saint Priest (FR)
- **Pied Innovation 2 "P.1.2"**
  69160 Tassin la Demi Lune (FR)

(72) Inventors:
- **Augoyard, Marc**
  69160 Tassin la Demi-Lune (FR)
- **Benichou, Michel**
  34070 Montpellier (FR)
- **Leemrijse, Thibaut**
  1200 Brussels (BE)
- **Maestro, Michel**
  06200 Nice (FR)
- **Peyrot, Jacques**
  69160 Tassin la Demi-Lune (FR)
- **Ragusa, Mathieu**
  38240 Grenoble (FR)
- **Valtin, Bernard**
  94500 Champigny (FR)
- **Poncet, Didier**
  69500 Bron (FR)

(74) Agent: **Bernasconi, Jean Raymond et al c/o Cabinet Lavoix,**
2, Place d'Estienne d'Orves
75441 Paris Cedex 09 (FR)

(54) **Total metatarsophalangeal prosthesis and ancillary instruments for fitting this prosthesis**

(57) This prosthesis comprises a metatarsal implant (1) and a phalangeal implant. The head (6) of the metatarsal implant has, opposite its articular surface (10), a flat rear face (7) designed to bear against a cutting surface on the metatarsal bone (M), this rear face (7) forming, with a plane perpendicular to the axis of the anchoring rod (4) of the metatarsal implant, an angle of approximately 20° so as to extend rearwardly and upwardly from the lower base of the metatarsal bone. In addition, the articular surface (10) and this inclined rear face (7) meet at a lower point (11), the distance between the axis and the anchoring rod (4) and this point (11) being determined so that the implant head (6) does not extend into the sesamoid grooves located on the lower base of the metatarsal bone. The invention also provides a set of ancillary instruments suitable for fitting such a prosthesis.

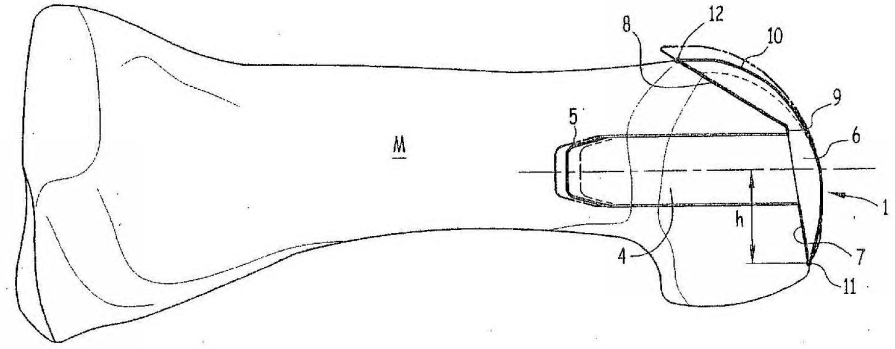

FIG.2

EP 1 508 316 A1

Printed by Jouve, 75001 PARIS (FR)

Paragon 28 v. Treace Medical Concepts
PGR2026-00031
Paragon Ex. 1014

Description

[0001] The present invention relates to a new total metatarsophalangeal prosthesis, known as a "cut prosthesis," in particular for the joint between the first metatarsal bone and the first phalanx of the big toe, as well as ancillary instruments for fitting this prosthesis.

[0002] It also relates to a set of metatarsal implants and a kit of such prostheses with different dimensions, allowing the surgeon to make an intraoperative selection of the dimensions of the various components of the prosthesis.

[0003] It also relates to a method for fitting the prosthesis according to the invention.

[0004] Total metatarsophalangeal prostheses are already known, comprising a metatarsal implant with a bone anchoring rod and an articular body arranged at the end of this rod, a phalangeal implant and an intermediate stud or plate designed to be placed on the phalangeal implant and having an articular surface complementary to the articular surface of the metatarsal implant.

[0005] An example of such a prosthesis is described in patent FR-B-2 787 013.

[0006] The present invention generally aims to improve total metatarsophalangeal prostheses. In particular, it aims to simplify these prostheses and provide them with improved anatomical properties, thereby improving the functionality of the metatarsophalangeal joint formed by a prosthesis and the adaptation of this prosthesis to the anatomical environment of this joint.

[0007] The invention also aims to provide ancillary instruments enabling the precise placement of the implants in all cases in which they are used.

[0008] The invention relates to a total metatarsophalangeal prosthesis comprising

[0009] a metatarsal implant comprising an anchoring rod designed to be placed longitudinally in the metatarsal bone, and a head located at the end of the rod, designed to be applied against the cutting surface on the end of the metatarsal bone and having an articular surface,

and a phalangeal implant having a body designed to be inserted axially into the phalanx and an edge located at the proximal end of said part and which can have an articular surface complementary to the articular surface on the body of the metatarsal implant,

said articular surface on the phalangeal implant preferably being capable of being carried by a separate stud that can be inserted into and held in the phalangeal implant,

characterized in that the head of the metatarsal implant has, opposite the articular surface, an inclined flat rear face designed to bear against a cutting surface on the metatarsal bone, said rear face forming, with the plane perpendicular to the axis of the anchoring rod, an angle of 20°± 5° so as to extend rearwardly and upwardly from the lower base of the metatarsal bone,

and in that the articular surface of said head of said inclined rear face meet at a lower point, forming the lowest point of the metatarsal implant, the distance between the axis and the anchoring rod and this lowest point being determined so that the implant head does not extend into the sesamoid grooves located on the lower base of the metatarsal bone.

[0010] As a result, when the foot is placed flat on the ground, the rear face of the metatarsal implant head is in a position substantially perpendicular to the ground. Moreover, the freedom of movement afforded to the sesamoid joints preserves the functionality of the ligaments and joints.

[0011] In a preferred embodiment, the articular surface of the implant body has only one radius in the sagittal plane. In other words, a sagittal section of this surface forms a circular arc. Also very advantageously, said surface can also have only one radius in the horizontal plane.

[0012] Of course, the articular surface opposite the phalangeal implant is complementary.

[0013] Particularly preferably, the complementary articular surface is formed by an intermediate stud, carried by the phalangeal implant, and rotating freely around the axis of the phalanx.

[0014] This results in perfect congruence in all positions, as the rotating stud adapts continuously to all angular positions.

[0015] The articular surface of the stud can advantageously have, on its periphery, and more specifically on a sensitive part of the periphery of the lower half and/or the periphery of the upper half, a notch forming a convex edge to allow the joint to move freely in the flexed and/or extended position.

[0016] In a preferred embodiment of the invention, and in particular where the phalangeal articular surface is formed by a stud rotating freely in the phalangeal implant, the latter has a hollow, frustoconical anchoring body that continues at its proximal end by a head in the form of a peripheral frustoconical edge, the stud having a corresponding shape, namely a frustoconical distal part with a taper corresponding to that of the body, which is followed by a plate having a peripherical distal surface with a taper corresponding to that of the edge of the implant, which also gives the stud a particularly resistant shape.

[0017] At the periphery, the edge can come into contact with the cortical bone of the phalanx and bear against it.

[0018] Preferably, the proximal face inclined at 20° ± 5° to the head of the metatarsal implant is extended upwards by an upper face forming, with the previous one, a dihedron, preferably an obtuse angle of

145°± 20°, designed to be applied against an upper cutting plane inclined at the same angle relative to the cut receiving the proximal face.

[0019] The invention also relates to a set of metatarsal implants comprising several metatarsal implants of different sizes, suitable for forming part of the prosthesis described above, the distance between the axis of the anchoring rod and the lowest point being substantially constant for all of the implants in the set.

[0020] The sesamoid grooves remain unobstructed, regardless of the metatarsal implant used.

[0021] In this set, the articular faces of the heads of the metatarsal implants are preferably sized to meet the corresponding upper face at a higher point at respective predetermined distances from the axis of the anchoring rod.

[0022] When fitting the prosthesis, a metatarsal implant with an upper part that is optimally suited to the condition of the ligaments in the upper joint can also be selected. These ligaments are often deformed, stiffened, or hardened by the condition that required the prosthesis to be fitted. In particular, the metatarsal implant will be chosen so as not to interfere with the lateral ligaments during dorsiflexion of the joint.

[0023] Advantageously, the diameter of the rod of the metatarsal implant can be substantially constant, regardless of the implant in the set, and the length of this rod can, optionally, be easily varied from one implant to another in the set.

[0024] The invention also relates to a kit of metatarsophalangeal prostheses having all or some of the features of the prosthesis described above.

[0025] A prosthetic kit according to the invention, and which comprises several metatarsal implants from a set as defined above, several phalangeal implants of different sizes and several studs, also of different sizes, is characterized in that a stud with an articular surface congruent with the articular surface of a given metatarsal implant can be received in at least two phalangeal implants of consecutive sizes.

[0026] This also enables the same dihedral cut to be made using the same ancillary instruments, regardless of the size of the metatarsal bone.

[0027] The phalangeal implant can have a frustoconical body having the same dimension for all of the implants in the kit, this cone being followed by the frustoconical edge, where only the diameter of the periphery of this edge varies from one implant to another in the kit, preferably so as to bear against the phalangeal cortex while still being set back from the outer dimensions of the phalanx at the level of the cut.

[0028] Several studs can be provided in the kit, all having the same frustoconical part of the stud adapted to the frustoconical body of the phalangeal implant, and with different peripheral diameters and/or plate thicknesses in the kit.

[0029] The set of implants is preferably presented in sterile kits.

[0030] In a particular embodiment of the kit according to the invention, three or four sizes of metatarsal implants with rods of 5 mm in diameter are provided. For example, for a kit comprising three metatarsal implants, the radii of curvature of the articular surface 10 are respectively 7 ± 0.5, 8 ± 0.5 and 9 ± 0.5 mm in the sagittal plane and 14 ± 1, 16 ± 1 and 18 ± 1 mm in the horizontal plane, and the lowest points in the sagittal plane (with the implant axis horizontal) are located at the same distance comprised between approximately 2 and 6 mm from the axis.

[0031] In such a kit, it is preferred to have four sizes of phalangeal implants, each implant having an implant body with a distal end diameter of 4.7 ± 2 mm and a peripheral edge diameter of 12 ± 1, 13.3 ± 1, 14.6 ± 1, and 16 ± 1 mm.

[0032] Three or four studs of different sizes can therefore be provided, namely studs with diameters of 12 ± 0.5, 13 ± 0.5 and 14 ± 0.5 mm for a set of three studs.

[0033] The invention also relates to a set of ancillary instruments for fitting the prosthesis according to the invention.

[0034] This set of ancillary instruments advantageously comprises the following parts:

- an ancillary positioning instrument having a body with a cylindrical inner passage allowing it to slide and to rotate about a pin implanted axially in the metatarsal bone, and, extending from said body, two bent arms with ends spatially arranged so as to be able to rest substantially immovably in the sesamoid grooves, towards their distal end at the lower part of the metatarsal bone, so as to keep the body in a suitable angular position relative to the two sesamoid grooves, said body further having a means for receiving and positioning an ancillary metatarsal cutting instrument, this means being advantageously a preferably non-circular rod, extending parallel to the axis of the implant and therefore to the pin, and at a distance from the metatarsal bone in the lateral direction towards the sagittal plane of the patient.
- an ancillary metatarsal cutting guide having a body with a passage allowing it to slide on the receiving means of the ancillary positioning instrument, said body having means for attaching it to the bone, preferably transverse passages through which small lateral fixing pins can be inserted and screwed into the lateral cortical bone of the metatarsal bone, said body further having at least one cutting slot for the passage of an oscillating saw, said at least one slot

being inclined at an angle of 70°± 20°, relative to the axis of the pin when the assembly is mounted on the metatarsal bone, the second slot being more inclined so that said two slots thus make it possible to make, on one hand, the cut receiving the rear face of the implant head and the second cut forming an obtuse angle, preferably of 145°± 20°, with the aforementioned cut;

– an ancillary phalangeal cutting instrument having a body enabling it to also be attached by small pins, laterally on the cortical bone of the phalanx, at least one and preferably two parallel phalangeal cutting slots, and an extension designed to be applied, preferably by interlocking, to a corresponding end of the ancillary metatarsal cutting instrument, so as to precisely define the relative positions of the two cutting assemblies, the metatarsal and phalangeal cutting slots being substantially parallel when the two ancillary cutting instruments are joined.

[0035] The invention also relates to a surgical method for fitting a complete metatarsophalangeal prosthesis according to the invention, comprising, after setting up the lateral metatarsophalangeal access, the following steps:

– dislocating the phalanx,
– inserting an axial pin in the metatarsal bone,
– fitting an ancillary positioning instrument on the pin by sliding and rotating it until said ancillary instrument is immobilized with the ends of the bends in the two sesamoid grooves,
– fitting the ancillary metatarsal cutting instrument on the ancillary positioning instrument,
– securing the ancillary cutting instrument in place with pins screwed into the metatarsal bone,
– cutting at 20° to the end of the metatarsal bone, then cutting the second face of the dihedron,
– fitting the ancillary phalangeal cutting instrument, preferably by first attaching it to the ancillary metatarsal instrument and then reducing the dislocation,
– cutting the phalanx
– removing the ancillary instruments,
– determining the outer diameter of the phalangeal implant edge, using a jig, for example,
– fitting the test metatarsal implant in position,
– after further dislocation of the phalanx, axial drilling of the phalanx using a burr with a shape corresponding to the phalangeal implant,
– fitting the test phalangeal implant,
– removing the test phalangeal implant and impacting the phalangeal implant,
– removing the test metatarsal implant and impacting the metatarsal implant,
– determining the thickness of the stud carrying the phalangeal articular surface and inserting the stud into the phalangeal implant,
– reducing and then closing the layers.

[0036] Other advantages and features of the invention will become apparent from the following description, which is provided by way of non-limiting example and refers to the accompanying drawing, in which:

Figure 1 shows a schematic perspective view of an implant according to the invention when fitted; Figure 2 shows a schematic sagittal sectional view of the position of a set of three metatarsal implants relative to a metatarsal bone; Figure 3 shows a schematic sectional view of a metatarsal implant with its stud; Figures 4 to 9 show respective top and side views of three metatarsal implants of different sizes,
Figures 10 to 12 show an elevation view of three studs of different sizes,
Figures 13 to 16 show an elevation view of four phalangeal implants of different sizes; Figure 17 shows a schematic elevation view of the ancillary positioning instrument; Figure 18 shows a view from underneath of this ancillary instrument,
Figure 19 shows a schematic view of the end of a metatarsal bone with the ancillary positioning instrument in different positions relative to the sesamoid grooves; Figure 20 shows an elevation view of the ancillary metatarsal cutting instrument when in place,
Figure 21 shows a view from underneath when this ancillary instrument is attached,
Figure 22 shows a side view of the ancillary phalangeal cutting instrument positioned on the ancillary metatarsal cutting instrument, and Figure 23 shows a view from underneath of the assembly shown in Figure 22.

[0037] Referring to Figure 1, a metatarsal bone M and a phalanx P can be seen, after the corresponding cuts have been placed, with a metatarsal implant 1, and a phalangeal implant 2 with a stud forming an articulating surface 3.

[0038] Referring to Figure 2, a schematic section of the metatarsal implant is shown as a solid line.

1. The dotted and mixed lines respectively depict two other sizes of metatarsal implants arranged in the same position on the metatarsal bone M, the three metatarsal implants forming an example of a set of metatarsal implants according to the invention.

[0039] As can also be seen with reference to Figures 4 to 9, each metatarsal implant 1 has a cylindrical rod 4 ending in a chamfered then rounded end 5. The diameter of this rod is chosen to allow the implant to be secured in a hole previously drilled axially in the metatarsal bone.

[0040] The metatarsal implant also has a head 6 with two faces forming a dihedron. One is the rear face 7, which forms an angle of around 20° with the axis of the rod 4, so that the rear face is inclined upwards and rearwards. At approximately the same level as the top of the rod 4, the flat face 7 is continued by a face 8 inclined at an angle of around 145° to face 7. In the example shown, the rod 4 is integrally connected to the face 7, but it is understood that the axis 9 of the dihedron could also be lower or higher.

[0041] On the distal side, the head 6 has an articular surface 10 which, in the sagittal plane shown, has a single radius of curvature to form a circular arc. In the perpendicular plane, that is, in the horizontal plane, the surface 10 also has a single radius of curvature. The articular surface 10 connects to the rear face 7, in the sagittal plane, at a lower point 11 located at a distance h from the axis of the rod 4.

[0042] Preferably in the context of the invention, this distance h is chosen between 2 and 6 mm. This distance h is identical or substantially identical for all metatarsal implants in the same kit. The distance h is such that when the implant is positioned on the metatarsal bones as shown in Figure 2, the position of the point 11 is such that the articular surface, in its lower part, does not encroach on the opening of the sesamoid grooves S shown in Figure 19.

[0043] Moreover, it can be seen that, depending on the dimensions of the articular surfaces 10 of the metatarsal implants in the set shown in Figures 4 to 9, the high point 12 of the implant formed by the meeting of surfaces 8 and 10 may or may not, due to the choice of the dimension of the implant, exceed the upper level of the metatarsal bone M and adapt to the extent possible to the local condition of the ligaments.

[0044] To keep the metatarsal implant from rotating in the metatarsal bone, the implant rod can also be fitted with rotation-immobilizing means, such as radial fins 13 on the face 8.

[0045] As can also be seen in Figure 2, when the implant is placed at the end of the metatarsal bone, the rear face 7 bears against the corresponding, similarly inclined, cut face at the end of the metatarsal bone, while the inclined face 8 bears against another, correspondingly inclined, cut face at the end of the metatarsal bone.

[0046] Referring to Figure 3, the phalangeal implant 2 can be seen, which has a frustoconical body 14 with a small distal base 15 and continues, at its proximal end, with a conical edge 16. A frustoconical recess 17 is located in the body 14, as an extension of the axial face of the edge 16.

[0047] Advantageously, the part 15 has a small diameter, for example on the order of 4.7 mm. Here, in the opening of the recess 17, the inner diameter is advantageously 6 cm, since the frustoconical recess in the body 14 can accommodate studs measuring 6 mm, for example.

[0048] The maximum diameter of the edge 16 can also vary depending on the size of the phalangeal implant.

[0049] This phalangeal implant can be fitted with a stud 3 comprising a plate 18 and a tail 19. The distal face of the plate 18 is congruent with the inner conical face of the edge 16, while the outer surface of the shank 19 is congruent and has the same conicity as the recess 17 in the implant body 14. It is understood that, in this way, the stud 3 is received in the implant and has a shape that imparts a particular strength to it. With polyethylene studs, for example, shear resistances of around 42 daN can be achieved.

[0050] The stud shank always has the same dimension, whereas the diameter and/or thickness of the plate 18 can vary.

[0051] The proximal articular face of the stud, as shown in Figure 1, is concave and congruent with the articular surface of the metatarsal implant, meaning that this face has, in perpendicular planes, radii of curvature that are respectively constant and identical to those of the metatarsal implant surface.

[0052] Lastly, it can be seen that two notches or chamfers have been cut into the periphery of the articular face of the stud, namely, a lower chamfer 20 and an upper chamfer 21, which extend over almost half of the peripheral circular arc in question. These chamfers provide additional room for flexion and extension respectively.

[0053] Referring more specifically to Figures 4 to 16, a complete kit comprising three metatarsal implants 1, four phalangeal implants 2 and three studs 3 is shown.

[0054] The diameter of the rods 4 for each metatarsal implant is around 5 mm, for example ± 2 mm. As shown in the drawings, the radii of curvature in the sagittal plane are, in ascending size, 7 ± 0.5, 8 ± 0.5 and 9 ± 0.5 mm and, in the frontal plane, 14, 16 and 18 mm. The horizontal dimensions are 16, 18 and 20 mm.

[0055] The four phalangeal implants 2 in the kit have outer edge diameters of 12 ± 1, 13.3 ± 1, 14.6 ± 1 and 16 ± 1 mm, respectively. The recesses

and surfaces receiving the studs are identical.

[0056] Lastly, the kit has three studs 3 with maximum plate diameters of 12 ± 0.5, 13 ± 0.5 and 14 ± 0.5 mm, respectively.

[0057] Any combination of metatarsal implant/stud/phalangeal implant is possible, given the adaptability of the components. In the drawing comprising Figures 4 to 16, the medically preferred correspondences between the three components, that is, metatarsal implants, studs and phalangeal implants, are shown as mixed-line arrows.

[0058] We refer now to Figures 17 to 19.

[0059] To fit a prosthesis according to the invention, after dislocating the phalanx, the distal end of the metatarsal bone M is accessed and an axial hole is drilled in the center of the pathological articular surface using a threaded pin 30, which is left in place.

[0060] The pin is then fitted with an ancillary instrument 31 which can slide and rotate on the pin, and which for this purpose has a body 32 with a corresponding passage. At its proximal end, the body 32 has two arms 33 and 34 which are bent first laterally, then downwards, then forwards, with their blunt ends extending obliquely downwards. The spacing between the two ends of the arms 33 and 34 corresponds roughly to the distance between the two sesamoid grooves S when they open out onto the articular anterior face of the metatarsal bone. Another elongated bent arm 35 also extends from the body 31, with most of it running parallel to the pin 30 and at a certain distance from the lateral surface of the metatarsal bone.

[0061] The part 31 is threaded onto the pin 30 and is slid and rotated so as to bring it into the position in which the two ends of the arms 33 and 34 penetrate the beginning of the sesamoid grooves S until all rotation is prevented, thus securing both the axial and rotational position of the ancillary instrument 31.

[0062] We refer now to Figures 20 and 21. **[0063]** An ancillary metatarsal cutting instrument 40 is then threaded onto the arm 35 in the opposite direction; this instrument has a rectangular body 41 with an elongated opening to accommodate the arm 35, on which the ancillary instrument 40 can slide but not pivot.

[0064] The body 41 has a plurality of transverse holes 42 through which small pins 43 can be inserted to secure the ancillary instrument 40 to the metatarsal bone M. Towards its front, the body 41 has enlargements in which a first transverse slot 44 is formed, inclined at 70° to the body 40 and to the arm 35 and therefore to the pin 30. Just below the last upper third of the slot 44, a second slot 45 begins, sloping upwards and forming an obtuse angle with the slot 44.

[0065] Lastly, the distal end of the body 41 has a surface 46 with a small internal recess.

[0066] The ancillary instrument 40 is slid onto the arm 35 until the slot 44 is aligned in its transverse plane with the upper part of the end of the arm 33, as shown in Figure 20, which determines where the lower point 11 of the metatarsal implant will be placed. In this position, the pins 43 are screwed in and the body 41 is rigidly attached to the metatarsal bone. The ancillary instrument 31 is then removed, followed by the pin 30, the diameter of which corresponds to the diameter of the metatarsal implant rod 4, which can then be driven into the hole left by the pin.

[0067] Lastly, a vibrating saw is used to cut the end of the metatarsal bone, first through slot 44, then through slot 45, creating two corresponding cutting planes at the front end, inclined according to the inclinations of the slots.

[0068] A test metatarsal prosthesis similar to the final metatarsal prosthesis can then be inserted, which enables the most appropriate size to be selected from the prosthetic kit.

[0069] Once the test metatarsal implant 1 is in place, the dislocation is reduced and the phalanx P is returned to its natural position with its articular surface against the articular surface of the test metatarsal implant, as can be seen in particular in Figure 23.

[0070] As shown in Figures 22 and 23, the ancillary phalangeal cutting instrument 50 is then inserted. This ancillary instrument has a body 51, also provided with a plurality of holes through which small pins can be inserted to secure the phalanx. Towards its proximal end, this body 51 has an enlargement 52 in which two parallel slots 53 and 54 have been made. The proximal end of this enlargement continues with an end 55 that has a short tip enabling it to penetrate the small recess in the end 46 of the ancillary metatarsal instrument 40, which precisely determines the respective positions of the two ancillary instruments 40 and 50. As can be seen in Figure 23, in this position the body 50 is slightly inclined to reproduce the slight natural varus position of the first phalanx P. Using pins similar to pins 43, the body 50 can then be attached to the lateral face of the phalanx P. In this position, slots 53 and 54 are parallel to slot 44 on the metatarsal implant.

[0071] The surgeon then uses one of the two slots 53 and 54 to make a straight cut through the end of the phalanx using an oscillating or vibrating blade.

[0072] The two cutting implants 40 and 50 are then removed by removing the corresponding pins.

[0073] The phalanx is then dislocated again and the dimension of the phalangeal implant is chosen.

[0074] Optionally, a jig can be used for this, consisting of a disc at the end of

a handle in the plane of the disc, optionally with a central hole inside it, that can be used to measure the diameter of the phalangeal cut.

[0075] If required, this jig can be positioned by inserting a pin through its central hole, so that it is positioned correctly in the phalanx.

[0076] Once the jig has been removed, the phalanx is drilled to create the hole for the phalangeal implant. To do so, a burr with a two-stage, conical outer shape is used, corresponding to the two conical stages of the implant. If required, this burr can be guided by a pin previously left in place and used to position the jig.

[0077] After drilling, a test phalangeal implant can be fitted; once this has been removed, the chosen phalangeal implant 2 can be permanently impacted.

[0078] The test metatarsal implant is then removed and replaced by the corresponding permanent metatarsal implant, which is impacted into the metatarsal M. **[0079]** The remaining step is to select the stud dimensions and, in particular, the thickness of the stud plate to ensure the right spacing between the phalanx and the metatarsal bone. Once the stud has been fitted into the phalangial implant, the dislocation is reduced and the anatomical layers closed.

[0080] A number of modifications and variations can also be made to the ancillary instruments described above, particularly with regard to the number and arrangement of the cutting slots.

Claims

1. A total metatarsophalangeal prosthesis comprising a metatarsal implant (1) comprising an anchoring rod (4) designed to be placed longitudinally in the metatarsal bone (M), and a head (6) located at the end of the rod, designed to be applied against the cutting surface on the end of the metatarsal bone and having an articular surface (10),

and a phalangeal implant (2) having a body (14) designed to be inserted axially into the phalanx and an edge (16) located at the proximal end of said part and which can have an articular surface (18) complementary to the articular surface (10) on the body of the metatarsal implant, **characterized in that** the head (6) of the metatarsal implant has, opposite the articular surface (10), a flat rear face (7) designed to bear against a cutting surface on the metatarsal bone (M), said rear face (7) forming, with the plane perpendicular to the axis of the anchoring rod (4), an angle of approximately 20° + 5° so as to extend rearwardly and upwardly from the lower base of the metatarsal bone,

and **in that** the articular surface (10) of said head and said inclined rear face (7) meet at a lower point (11), forming the lowest point of the metatarsal implant, the distance between the axis and the anchoring rod (4) and this lowest point (11) being determined so that the implant head (6) does not extend into the sesamoid grooves located on the lower base of the metatarsal bone.

2. The prosthesis according to claim 1, **characterized in that** said articular surface (18) on the phalangeal implant (2) is carried by a separate stud (3) that can be inserted into and held in the phalangeal implant (2).

3. The prosthesis according to any of the preceding claims, **characterized in that** the articular surface (10) of the implant body has only one radius in the sagittal plane and only one radius in the horizontal plane, the articular face (18) on the phalangeal implant being congruent and carried by a stud (3) that can rotate around the axis of the phalangeal implant.

4. The prosthesis according to any of claims 2 or 3, **characterized in that** the articular surface (18) of the stud (3) has, on its periphery, in particular on a sensitive part of the periphery of the lower half and/or the periphery of the upper half, a notch (20, 21) forming a convex edge to allow the joint to move freely in the flexed and/or extended position.

5. The prosthesis according to any of claims 2 to 4, **characterized in that** the phalangeal implant (2) has a hollow, frustoconical anchoring body (14) that continues at its proximal end by a head in the form of a peripheral frustoconical edge (16), the stud (3) having a corresponding shape, namely a frustoconical distal part (19) with a taper corresponding to that of the body, which is followed by a plate (18) having a peripherical distal surface with a taper corresponding to that of the edge (16) of the implant, which also gives the stud a particularly resistant shape.

6. The prosthesis according to any of the preceding claims, **characterized in that** the proximal face (7) inclined at 20°± 5° to the head (6) of the metatarsal implant is extended upwards by an upper face (8) forming, with the previous one, a dihedron, preferably an obtuse angle of 145°± 20°, designed to be applied against an upper cutting plane inclined at the same angle relative to the cut

receiving the proximal face (7).

7. A set of metatarsal implants comprising a plurality of metatarsal implants (1) of different sizes, suitable for forming part of a prosthesis according to any of claims 1 to 6, in which the distance (h) between the axis of the anchoring rod (4) and the lowest point (11) is substantially constant for all of the implants in the set.

8. The set of implants according to claim 7, **characterized in that** the metatarsal implants (1) have the features set out in claim 6, the articular faces (10) of the heads (6) of these implants being sized to meet the corresponding upper face (8) at a higher point (12) at respective predetermined distances from the axis of the anchoring rod (4).

9. The set of implants according to any of claims 7 or 8, **characterized in that** the diameter of the rod (4) of the metatarsal implants (1) is substantially constant.

10. A prosthetic kit comprising a set of metatarsal implants (1) according to any of claims 7 to 9, several phalangeal implants (2) of different sizes and several studs (3), also of different sizes, **characterized in that** a stud (3) with an articular surface (18) congruent with the articular surface (18) of a given metatarsal implant can be received in at least two phalangeal implants of consecutive sizes to form a prosthesis according to any of claims 1 to 7.

11. The kit, according to claim 9, **characterized in that** the phalangeal implant (2) has a frustoconical body (14) having the same dimension for all of the implants in the kit, this cone being followed by the frustoconical edge (16), where only the diameter of the periphery of this edge (16) varies from one implant to another in the kit.

12. The kit according to any of claims 10 or 11, comprising three metatarsal implants (1), **characterized in that** the radii of curvature of the articular surface (10) are respectively 7 ± 0.5, 8 ± 0.5 and 9 ± 0.5 mm in the sagittal plane and 14 ± 1, 16 ± 1 and 18 ± 1 mm in the horizontal plane, and the lowest points (11) in the sagittal plane are located at the same distance (h) comprised between approximately 2 and 6 mm from the axis.

13. The kit according to claim 12, **characterized by** four sizes of phalangeal implants (2), each implant having an implant body (14) with a distal end diameter of 4.7 ± 2 mm and a peripheral edge diameter (16) of 12 ± 1, 13.3 ± 1, 14.6 ± 1, and 16 ± 1 mm.

14. The kit according to claim 13, **characterized in that** it comprises three studs (3) of different sizes, namely studs with diameters of 12 ± 0.5, 13± 0.5 and 14 ± 0.5 mm for a set of three studs.

15. An ancillary positioning instrument (31) for fitting a prosthesis according to any of claims 1 to 6, having a body (32) with a cylindrical inner passage allowing it to slide and to rotate about a pin implanted axially in the metatarsal bone, and, extending from said body (32), two bent arms (33, 34) with ends spatially arranged so as to be able to rest substantially immovably in the sesamoid grooves, towards their distal end at the lower part of the metatarsal bone, so as to keep the body (32) in a suitable axial and angular position relative to the two sesamoid grooves, said body (32) further having a means (35) for receiving and positioning an ancillary metatarsal cutting instrument, extending parallel to the axis of the implant and therefore to the pin, and at a distance from the metatarsal bone in the lateral direction towards the sagittal plane of the patient.

16. The ancillary instrument according to claim 15, **characterized in that** said receiving means (35) is a rod with a non-circular section.

17. The ancillary metatarsal cutting guide (40) for fitting a prosthesis according to any of claims 1 to 6, having a body (41) with a passage allowing it to slide on the receiving means of an ancillary positioning instrument (31) according to any of claims 15 and 16, said body having means (42) for attaching it to the bone, said body (41) further having at least one cutting slot for the passage of an oscillating saw, said slot (44) being inclined at an angle of 70°± 20° relative to the axis of the pin when the assembly is mounted on the metatarsal bone.

18. The ancillary instrument according to claim 17, **characterized in that** it comprises a second slot (45) which is more inclined so that said two slots (44, 45) thus make it possible to make, on one hand, the cut receiving the rear face (7) of the implant head (6) and, on the other hand, the second cut that forms an obtuse angle, preferably of 145°± 20°, to the aforementioned cut.

19. An ancillary instrument (50) for cutting a phalanx in order to fit a prosthesis according to any of claims 1 to 6, comprising a body (51) enabling it to be laterally

attached to the cortical bone of the phalanx, at least one phalangeal cutting slot (53) and an extension (55) designed to bear against a corresponding end of the ancillary metatarsal cutting instrument (40) according to any of claims 17 and 18, so as to precisely determine the relative positions of the two cutting assemblies, the metatarsal and phalangeal cutting slots being substantially parallel when the two ancillary cutting instruments are joined.

20. The ancillary instrument according to claim 19, **characterized in that** it comprises two parallel cutting slots (53, 54).

FIG.1

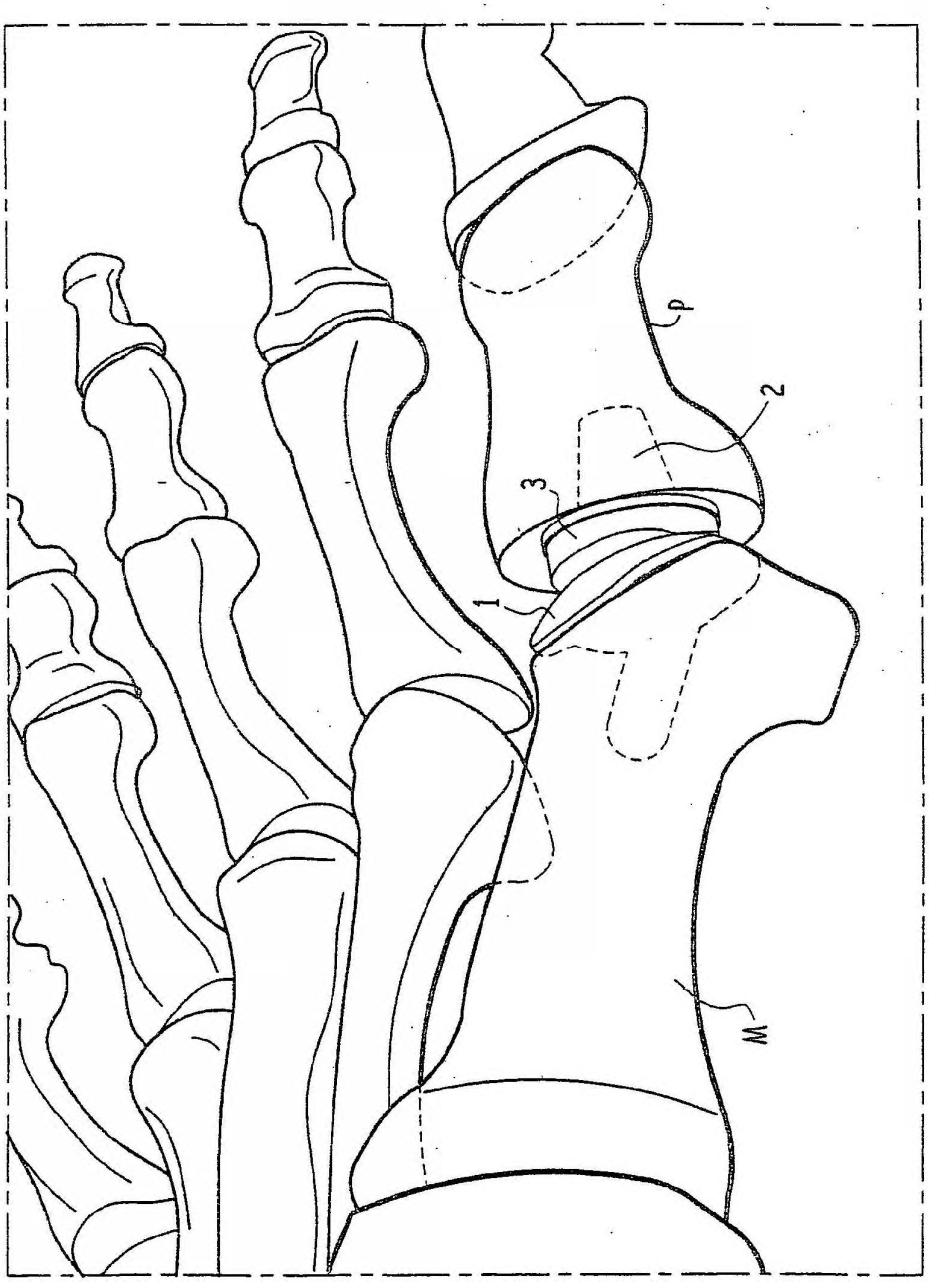

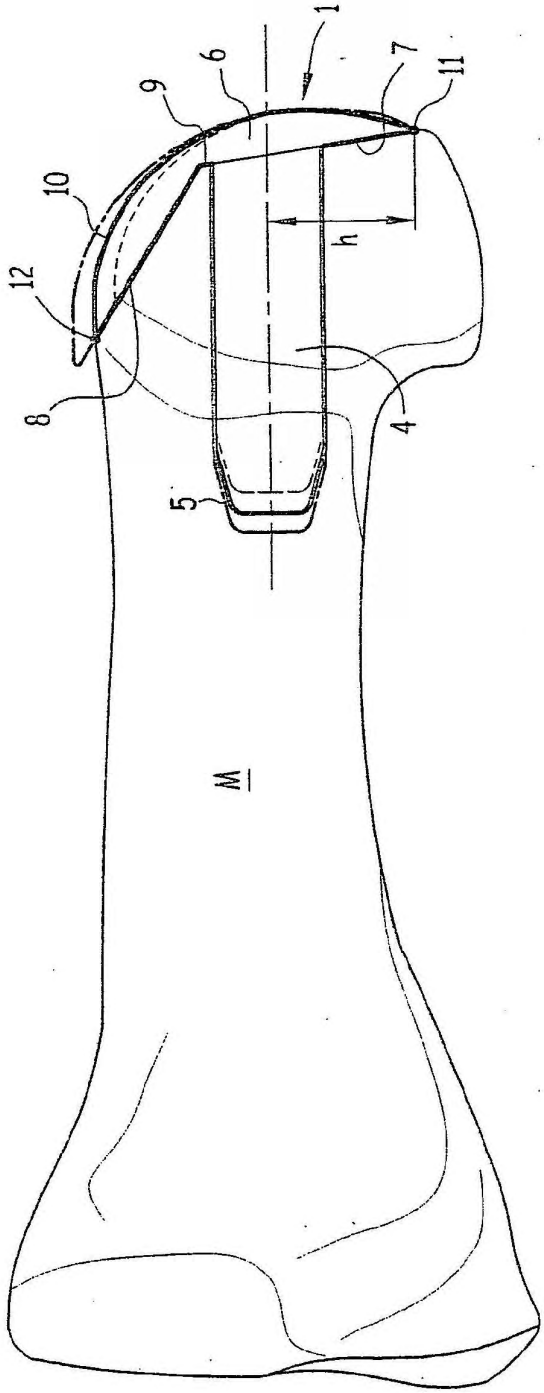

FIG.2

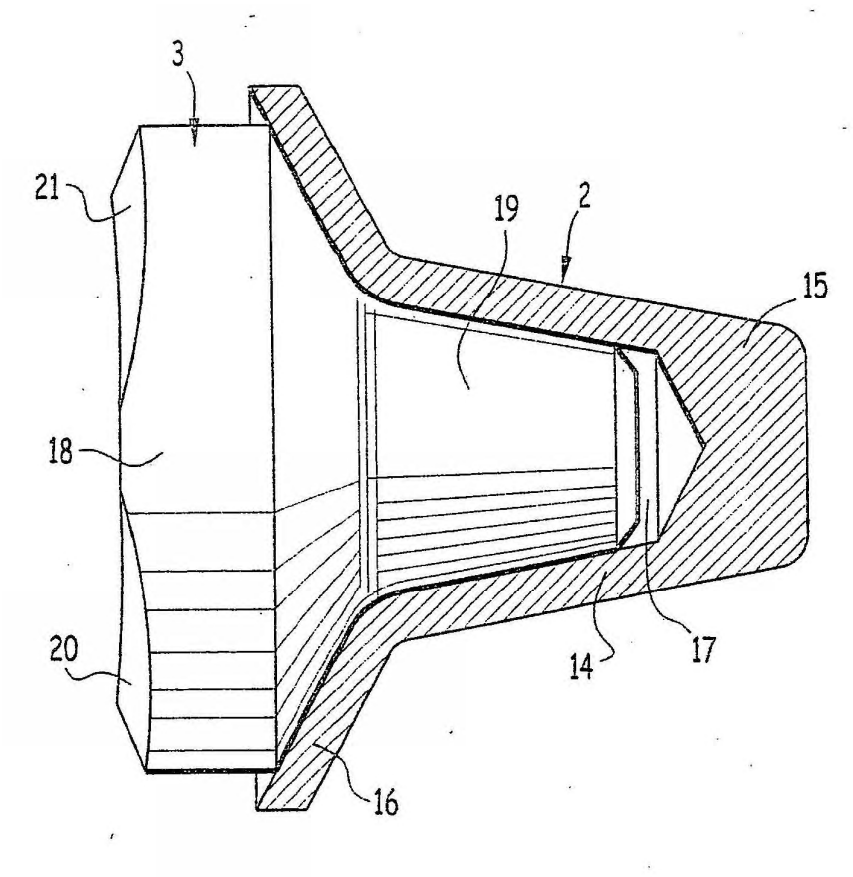

FIG.3

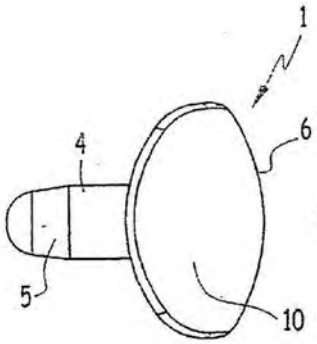

FIG.4

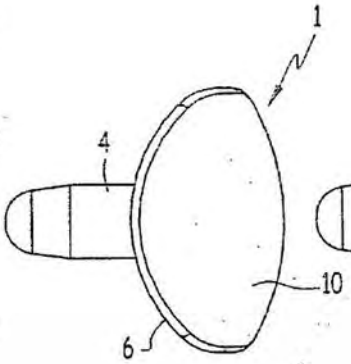

FIG.6

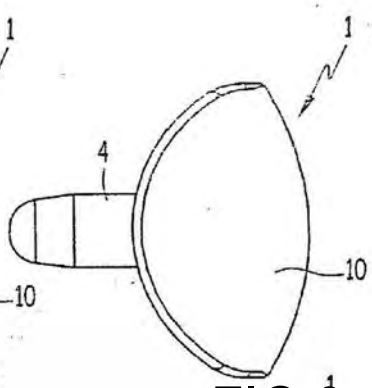

FIG.8

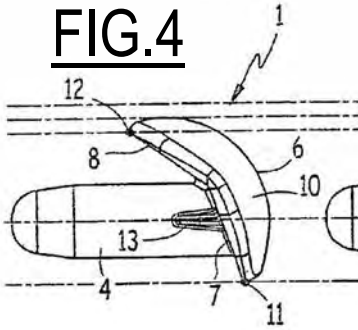

FIG.5

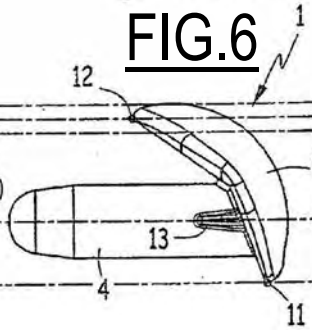

FIG.7

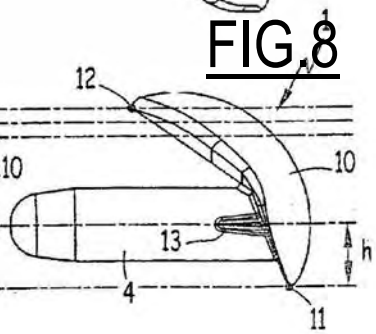

FIG.9

FIG.10

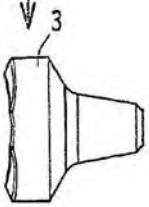

FIG.11

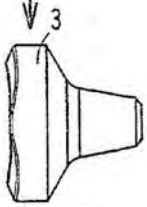

FIG.12

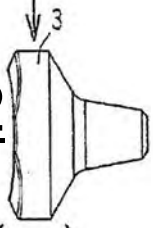

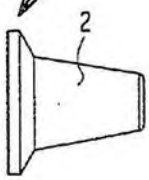

FIG.13

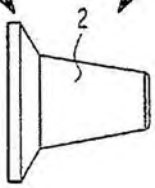

FIG.14

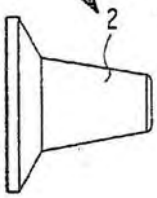

FIG.15

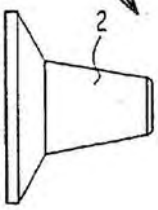

FIG.16

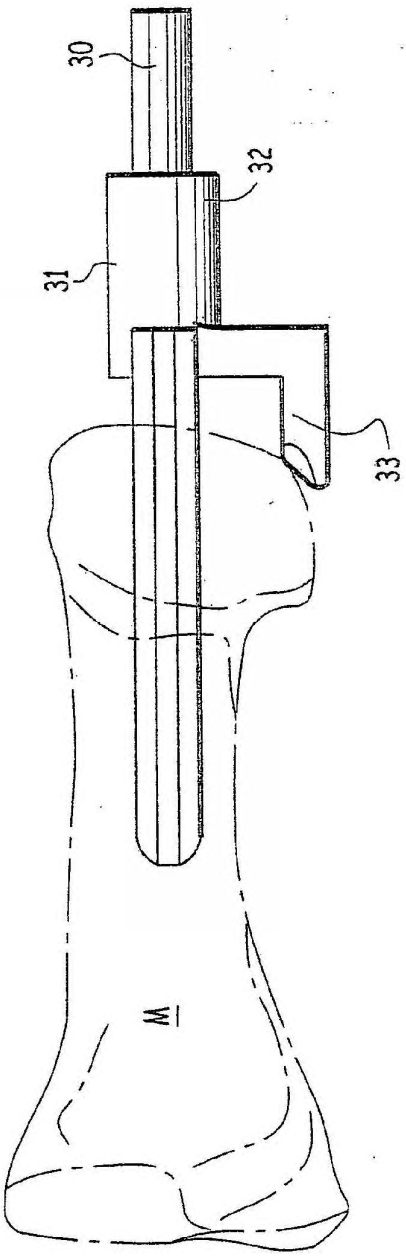

FIG.17

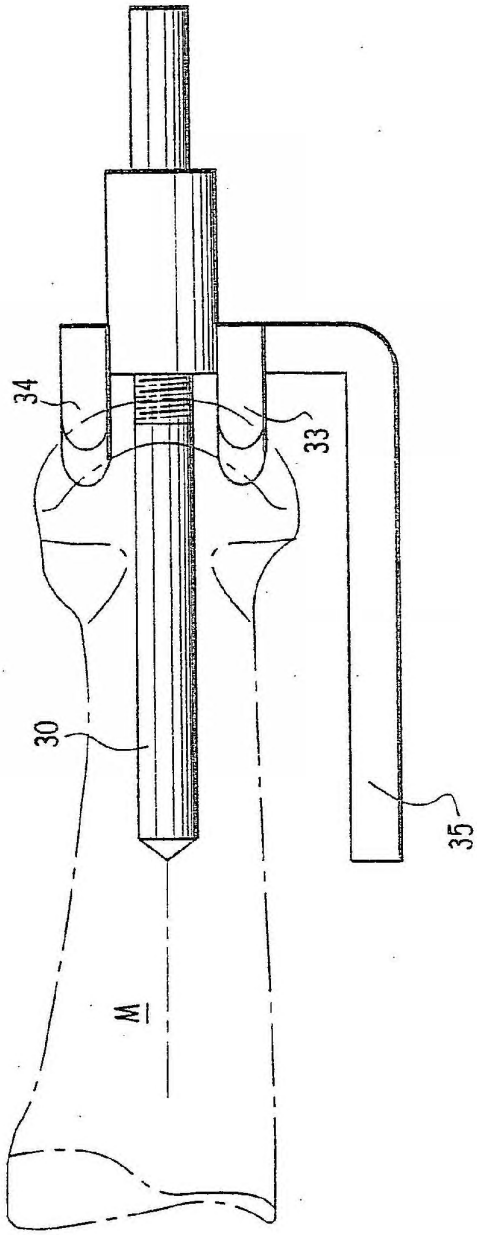

FIG.18

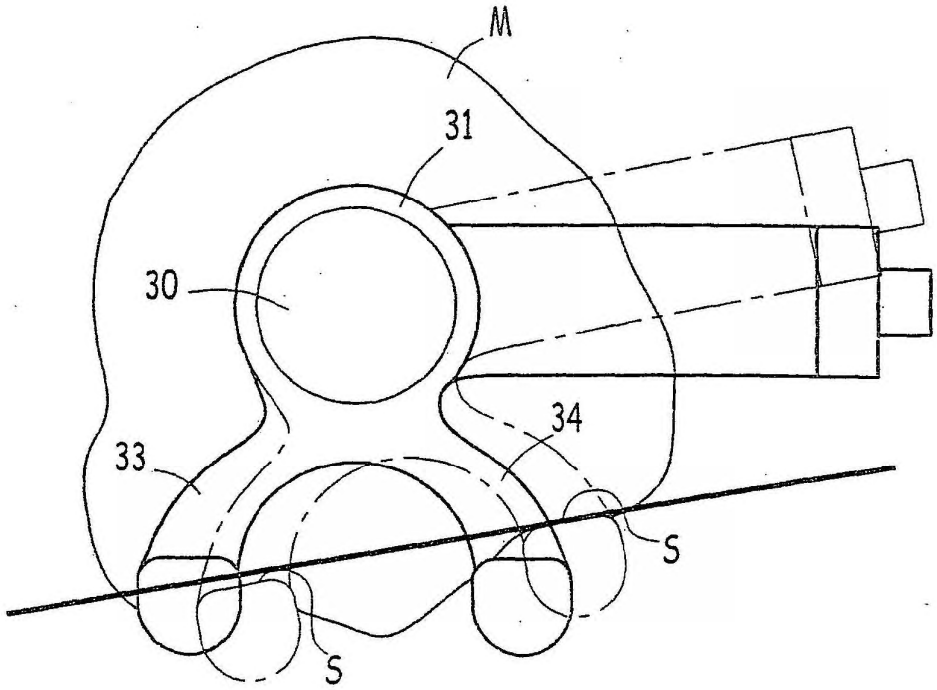

FIG.19

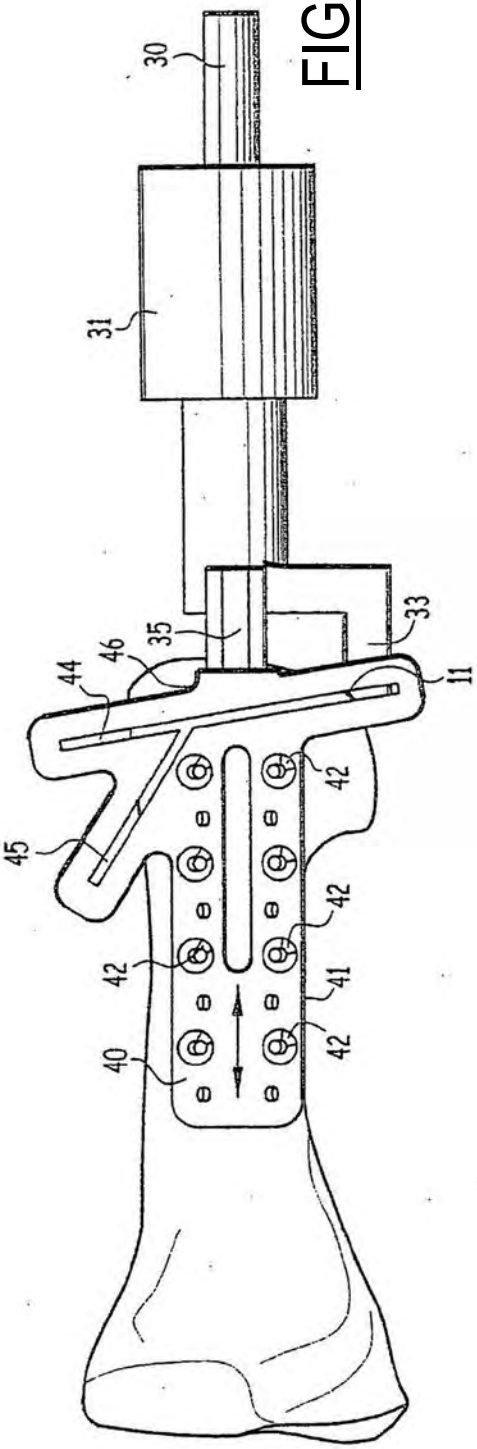

FIG.20

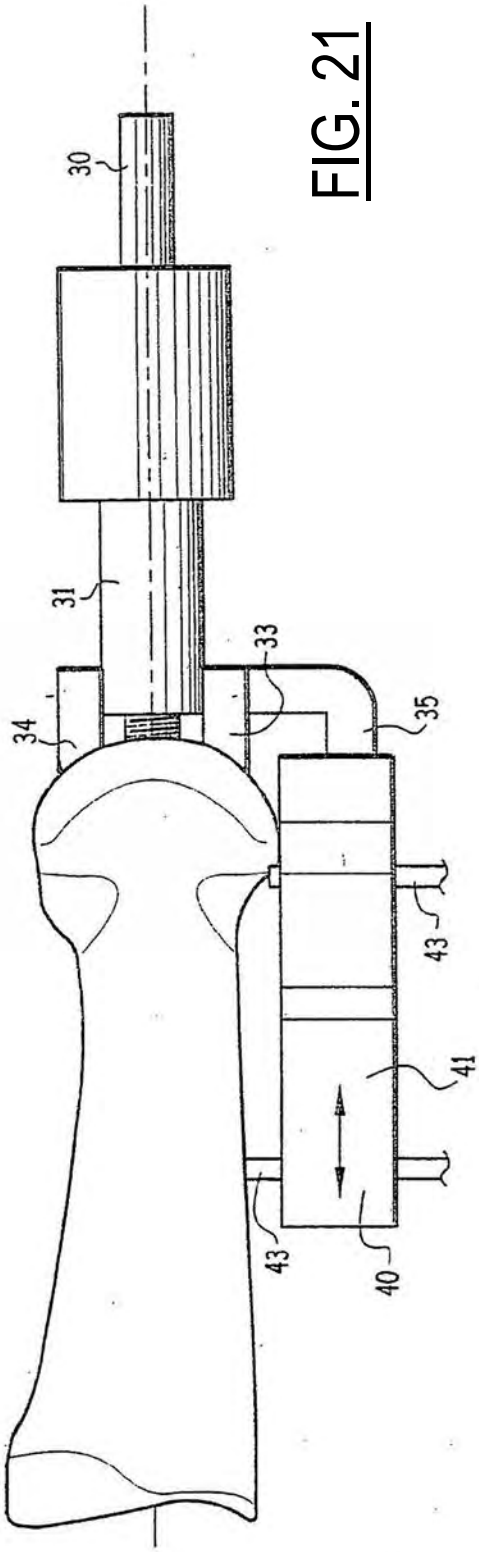

FIG. 21

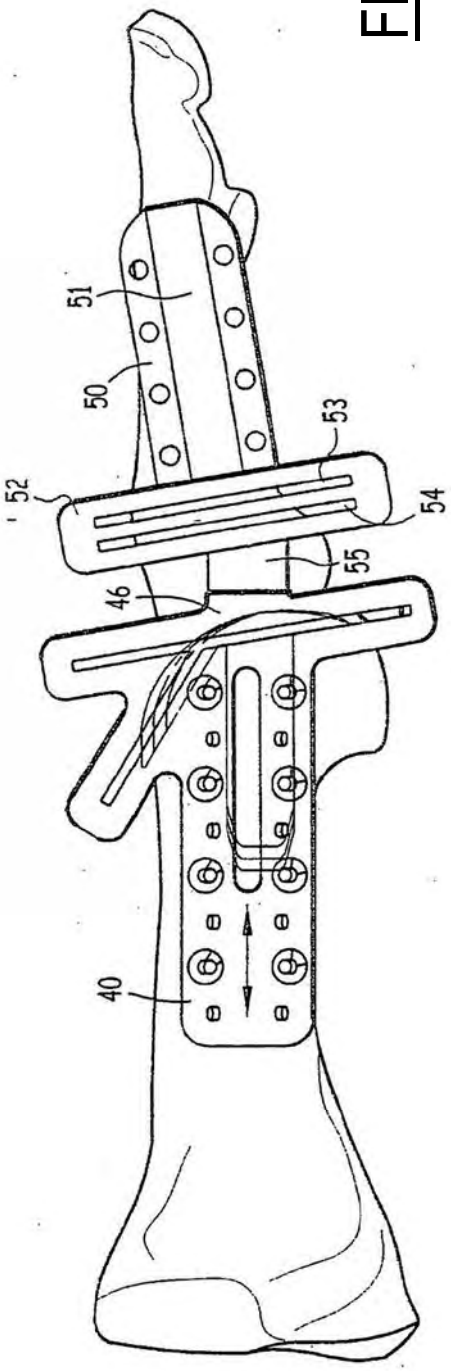

FIG.22

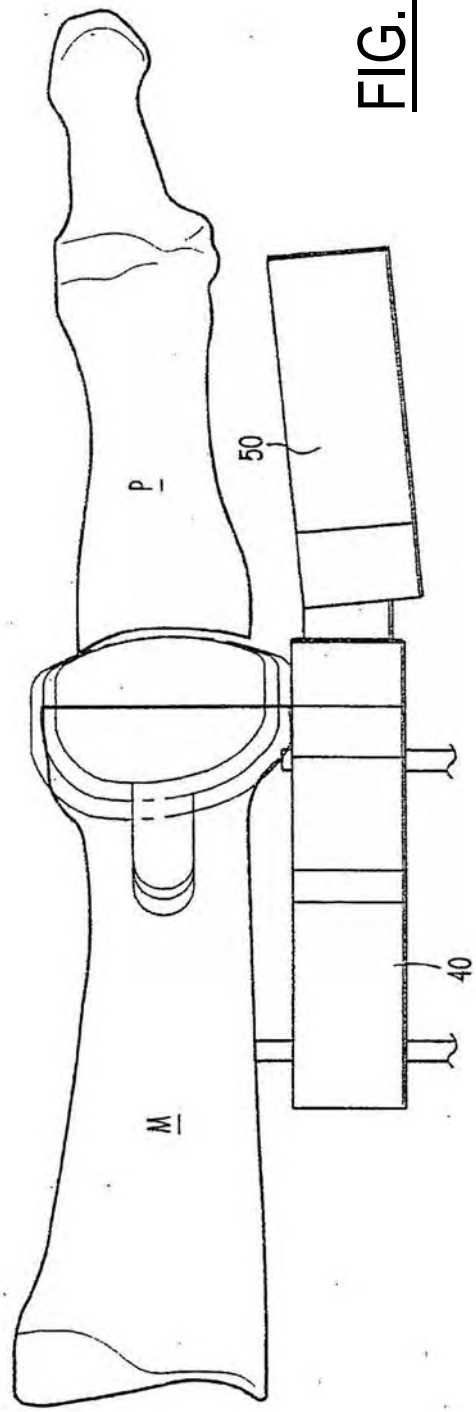

FIG. 23

[logo] European Patent Office

EUROPEAN SEARCH REPORT

Application number
EP 04 29 0319

DOCUMENTS CONSIDERED TO BE RELEVANT

Category	Citation of document with indication, where appropriate, of the relevant passages	Relevant to claim	CLASSIFICATION OF THE APPLICATION (Int.Cl.7)
A	US 5 458 648 A (HAYES JR DANIEL E ET AL) October 17, 1995 (10/17/1995) *claims 1.4; figure 7* - - - - -	1-6, 15-20	A61F2/42
A	WO 01/03613 A (EMMANUEL ELMO MOHAN; IMPLANTS INTERNAT LTD (GB)) January 18, 2001 (01/18/2001) *claims 1,30; figure 1* - - - - -	1-14	
A	DE 101 30 796 A (MUENDER ULRICH) January 23, 2003 (01/23/2003) *abstract* - - - - -	1-14	
A	WO 02/43627 A (ASCENSION ORTHOPEDICS INC) June 6, 2002 (06/06/2002) *claims 1,10,15* - - - - -	1-14	
D,A	FR 2 787 013 A (DEPUY FRANCE) June 16, 2000 (06/16/2000) *whole document* - - - - -	1-20	
A	FR 2 803 509 A (DIEBOLD PATRICE) July 13, 2001 (07/13/2001) *abstract* - - - - -	1	TECHNICAL FIELDS SEARCHED (Int.Cl.7) A61F A61B
A	US 5 601 565 A (HUEBNER RANDALL J) February 11, 1997 (02/11/1997) *abstract* - - - - -	15-20	
A	US 5 843 085 A (GRASER ROBERT E) December 1, 1998 (12/01/1998) *abstract* - - - - -	15-20	
A	US 6 030 391 A (SCHROM MARK G ET AL) February 29, 2000 (02/29/2000) *abstract* - - - - -	15-20	

This report has been drawn up for all claims

Place of search	Date of completion of the search	Examiner
Berlin	December 10, 2004	Korth, C-F

CATEGORY OF CITED DOCUMENTS

X: particularly relevant if taken alone
Y: particularly relevant if combined with another document of the same category
A: technological background
O: non-written disclosure
P: intermediate document

T: theory or principle underlying the invention
E: earlier patent document, but published on, or after the filing date
D: document cited in the application
L: document cited for other reasons

&: member of the same family, corresponding document

EPO FORM 1503 03.82 (P04C02)

ANNEX TO THE EUROPEAN SEARCH REPORT ON EUROPEAN PATENT APPLICATION NO. EP 04 29 0319

This annex lists the patent family members relating to the patent documents cited in the above-mentioned European search report.
These members are contained in the European Patent Office file as of the date of [text missing]
The European Patent Office is in no way liable for these particulars which are merely given for the purpose of information.
12/10/2004

Patent Document cited in search report	Date of publication	Member(s) of the patent family(ies)	Date of publication
US 5458648 A	10/17/1995	NONE	
WO 0103613 A	01/18/2001	WO 0103613 A1	01/18/2001
DE 10130796 A	01/23/2003	DE 10130796 A1	01/23/2003
WO 0243627 A	06/06/2002	AU 1790602 A	06/11/2002
		CA 2430255 A1	06/06/2002
		EP 1339362 A2	09/03/2003
		JP 2004520873 T	07/15/2004
		WO 0243627 A2	06/06/2002
		US 2002065561 A1	05/30/2002
FR 2787013 A	06/16/2000	FR 2787013 A1	06/16/2000
		AU 776010 B2	08/26/2004
		AU 1569900 A	07/03/2000
		EP 1139928 A1	10/10/2001
		WO 0035381 A1	06/22/2000
		JP 2002532138 T	10/02/2002
FR 2803509 A	07/13/2001	FR 2803509 A1	07/13/2001
US 5601565 A	02/11/1997	NONE	
US 5843085 A	12/01/1998	NONE	
US 6030391 A	02/29/2000	NONE	

EPO FORM P0460

For further information about this appendix: see Official Journal of the European Patent Office, No. 12/82