US 20090118733A1

(19) United States

(12) Patent Application Publication

(10) Pub. No.: US 2009/0118733 A1

(43) Pub. Date: May 7, 2009

Orsak et al.

(54) **ORTHOPEDIC DEVICE**

(75) Inventors: **James Edward Orsak**, Eads, TN (US); **Kian-Ming (Kevin) Wong**, Cordova, TN (US)

Correspondence Address:
DUANE MORRIS LLP - Philadelphia
IP DEPARTMENT
30 SOUTH 17TH STREET
PHILADELPHIA, PA 19103-4196 (US)

(73) Assignee: **Wright Medical Technology, Inc.**, Arlington, TN (US)

(21) Appl. No.: **12/262,628**

(22) Filed: **Oct. 31, 2008**

Related U.S. Application Data

(60) Provisional application No. 60/984,012, filed on Oct. 31, 2007, provisional application No. 61/096,358, filed on Sep. 12, 2008.

Publication Classification

(51) **Int. Cl.**

A61B 17/56	(2006.01)
A61B 17/04	(2006.01)
A61B 17/58	(2006.01)
A61B 19/00	(2006.01)

(52) **U.S. Cl.** **606/60**; 606/329; 606/96; 128/898

(57) **ABSTRACT**

An orthopedic device for fixating bone parts includes a set of one or more bone fixation pins for engaging a bone piece, an elongated fixator body having an internally threaded bore extending longitudinally therethrough, a pair of opposed longitudinally extending slots in the fixator body, and a pin-holder received within the fixator body and configured to removably hold the set of one or more bone fixation pins. The pin-holder is longitudinally movable within the fixator body for controlling the position of the set of bone fixation pins within the fixator body. The fixator body also can be configured to removably hold a second set of one or more bone fixation pins at a location fixed along the fixator body.

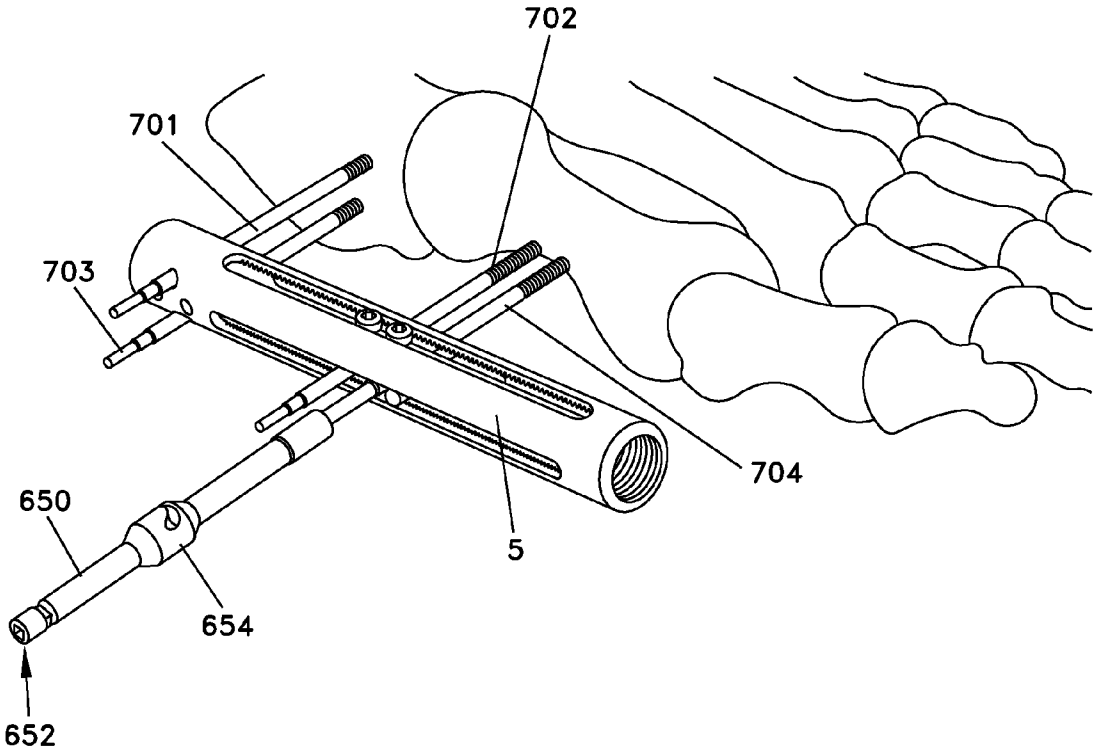

Paragon 28 v. Treace Medical Concepts
PGR2026-00031
Paragon Ex. 1024

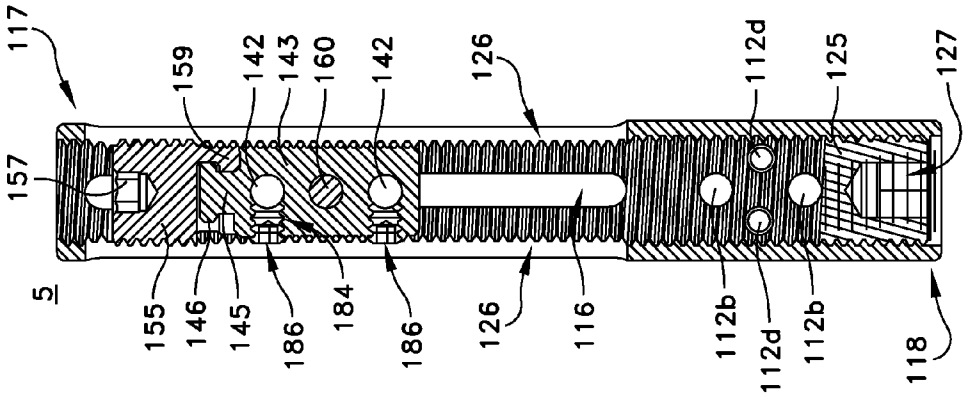

FIG. 1C

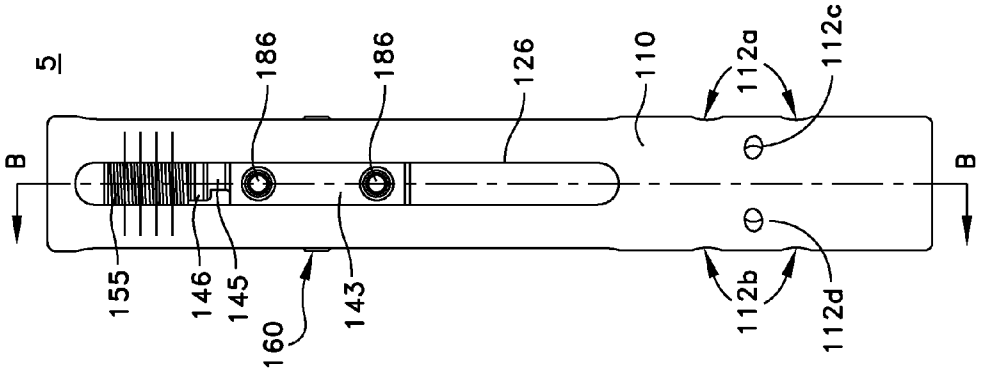

FIG. 1B

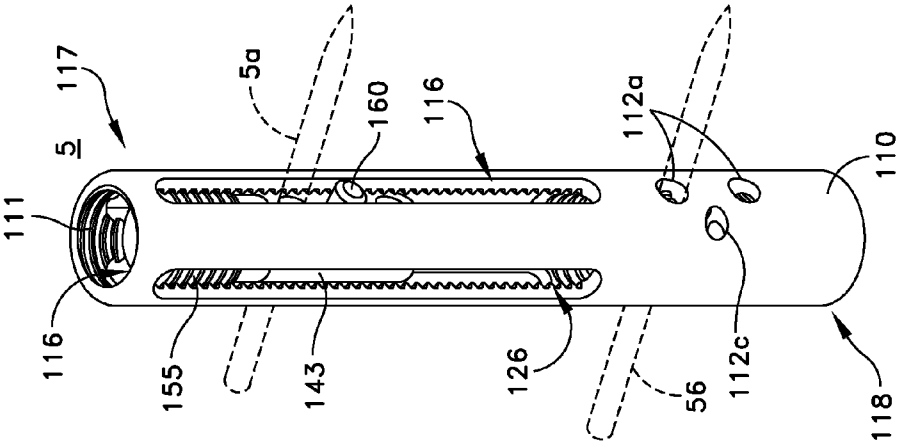

FIG. 1A

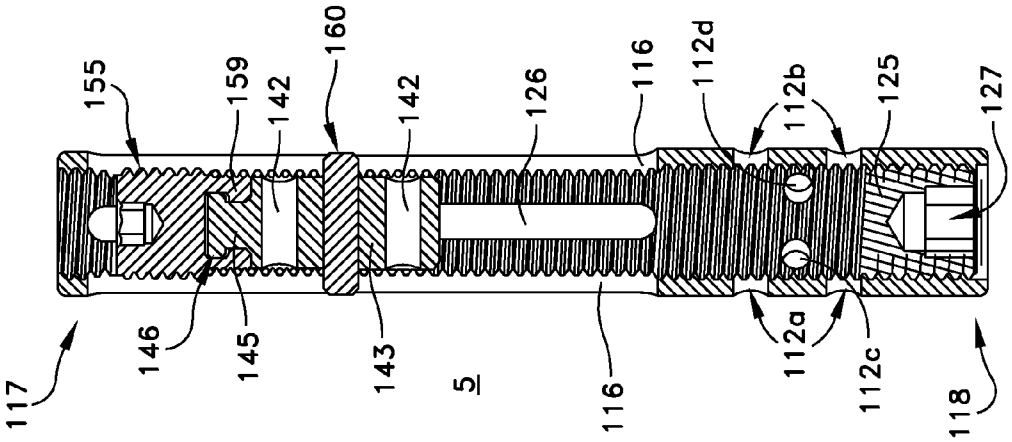
155
159
142
160
142
126
116
112d
112b
125
127
117
146
145
143
5
116
112a
112c
118

FIG. 1E

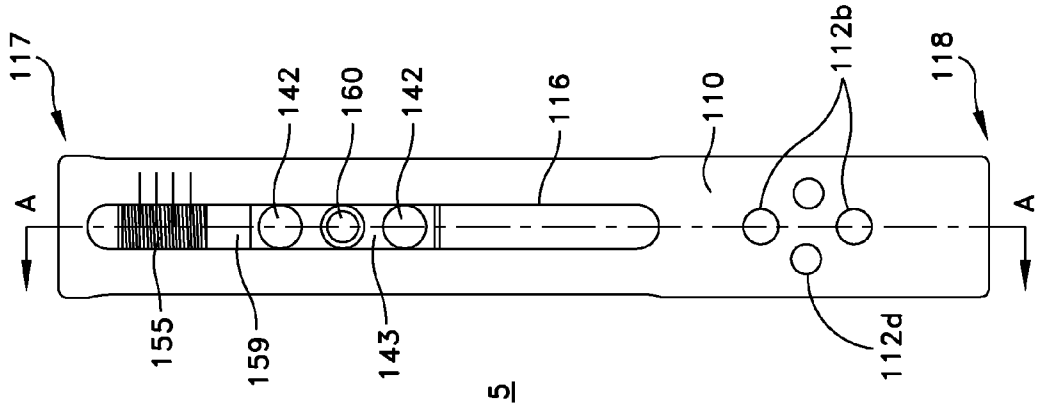
117
142
160
142
116
110
112b
118
A
A
155
159
143
5
112d

FIG. 1D

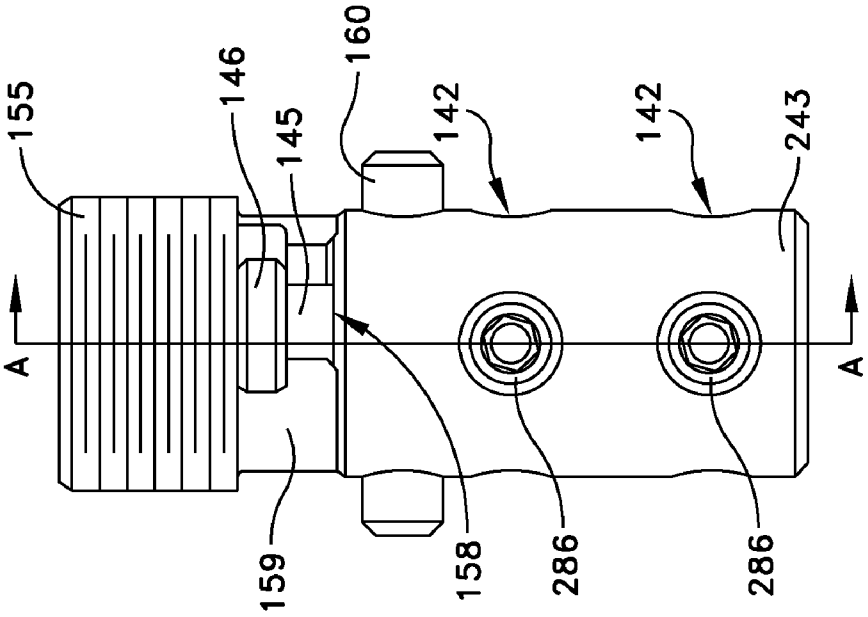
155
146
145
160
142
142
243
A
A
159
158
286
286

FIG. 2A

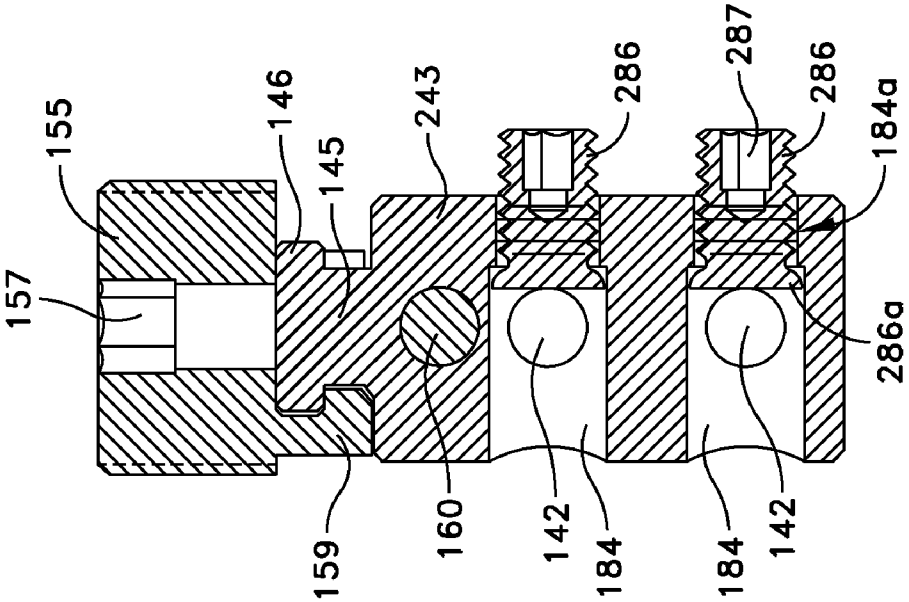
155
157
146
145
243
286
287
286
184a
286a
159
160
142
184
184
142

FIG. 2B

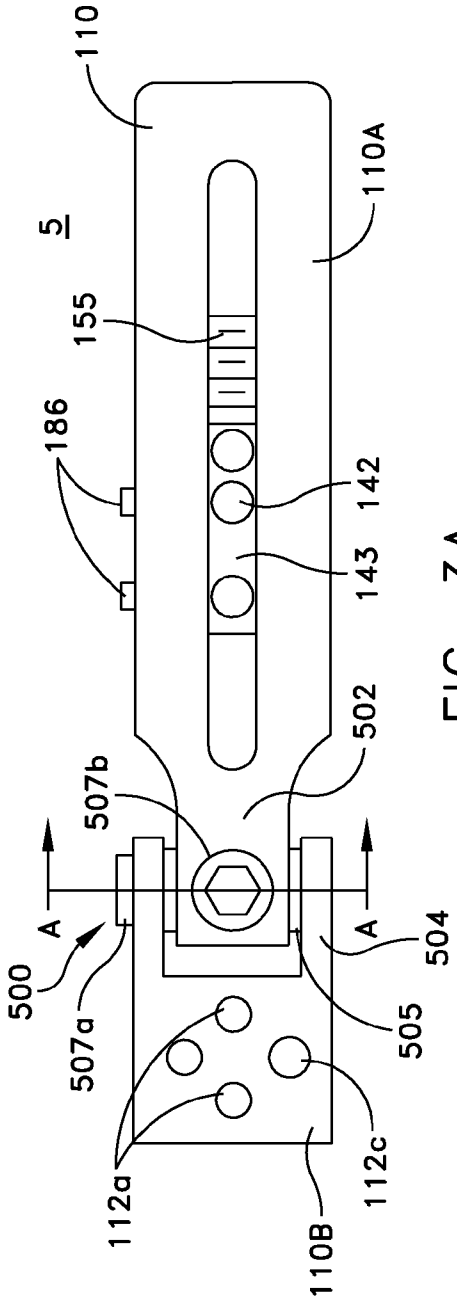
5
110
110A
155
186
142
143
502
507b
A
A
500
507a
504
505
112a
112c
110B

FIG. 3A

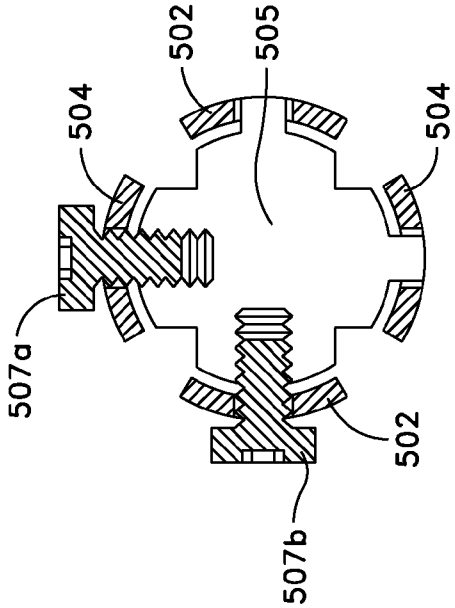
502
505
504
504
507a
502
507b

FIG. 3B

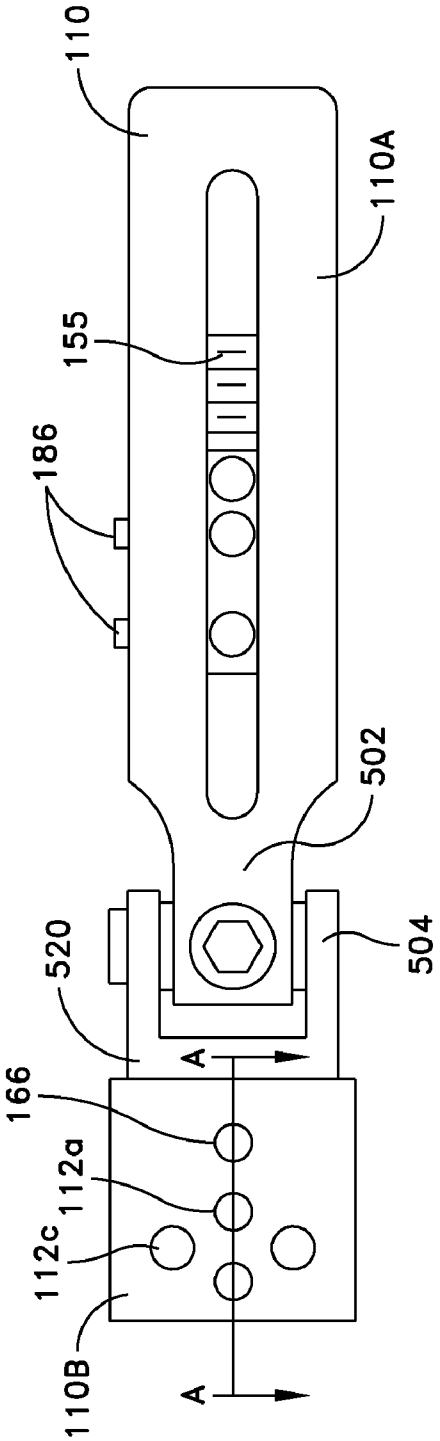
110
110A
155
186
502
504
520
166
112a
112c
110B
A
A

FIG. 3C

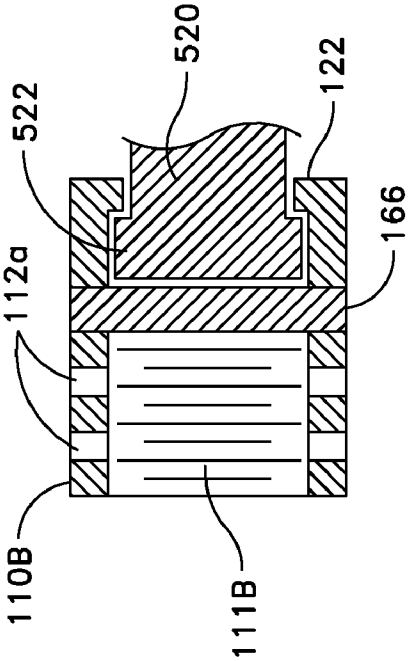
520
122
522
166
112a
110B
111B

FIG. 3D

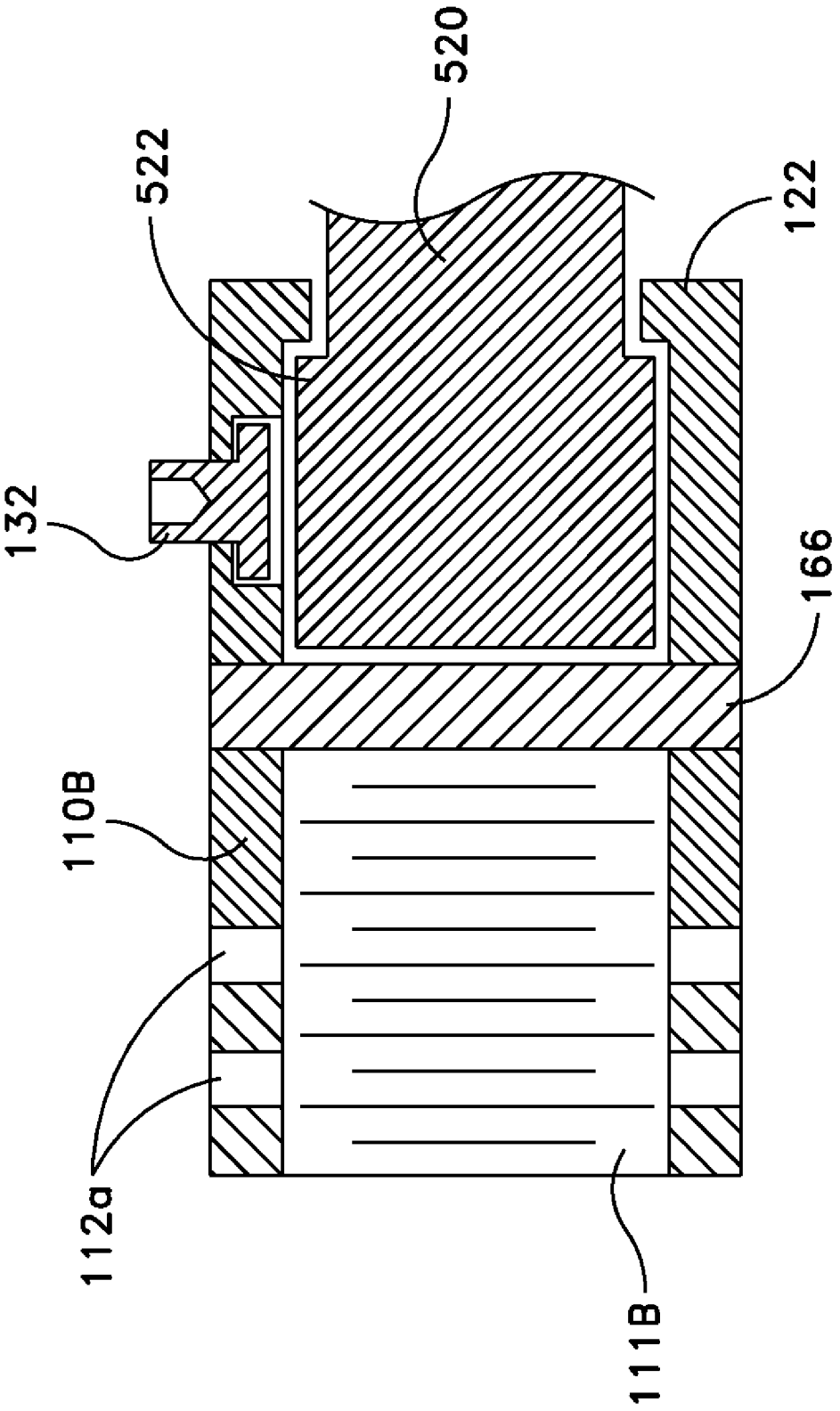

FIG. 3E

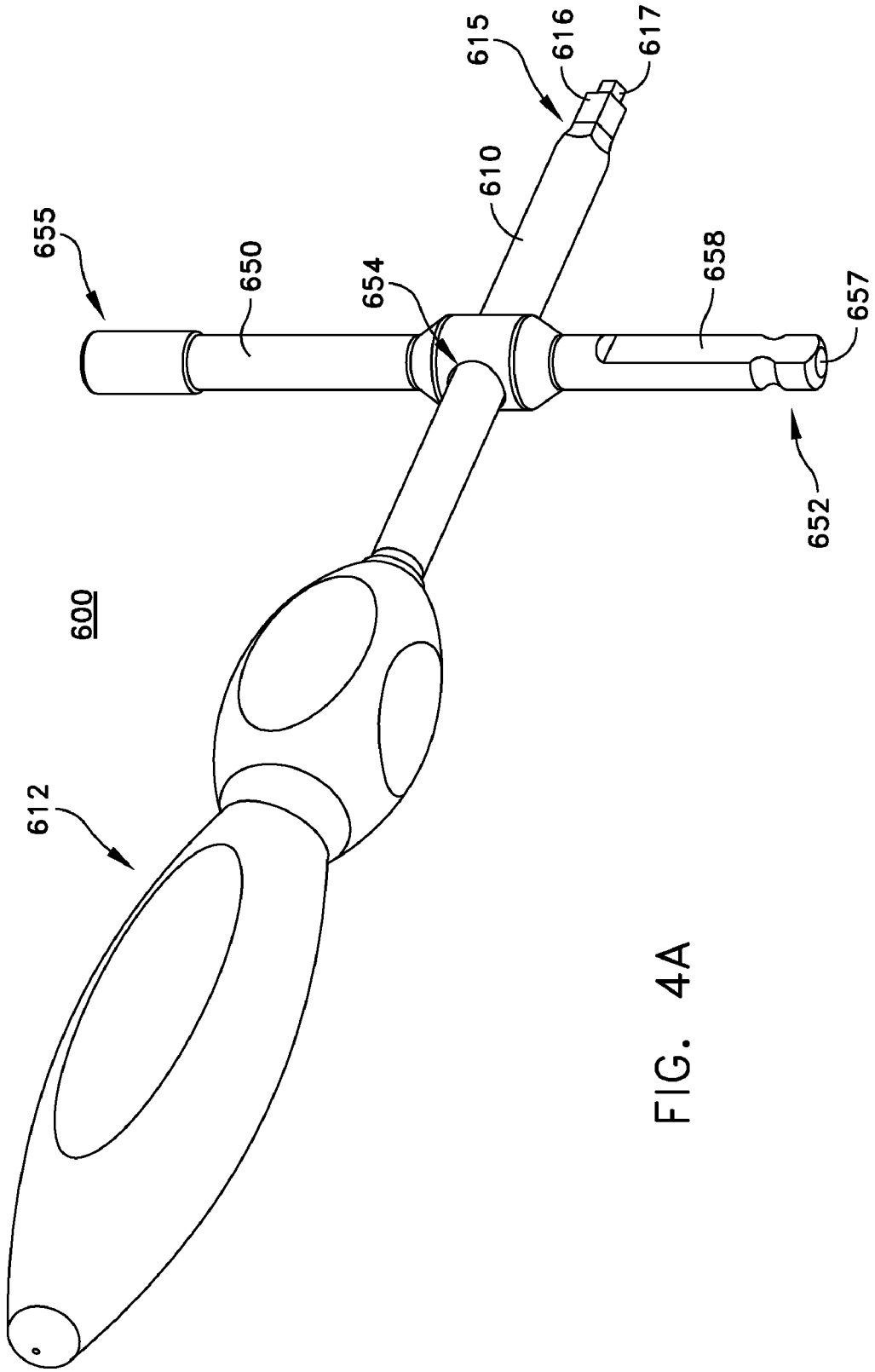

FIG. 4A

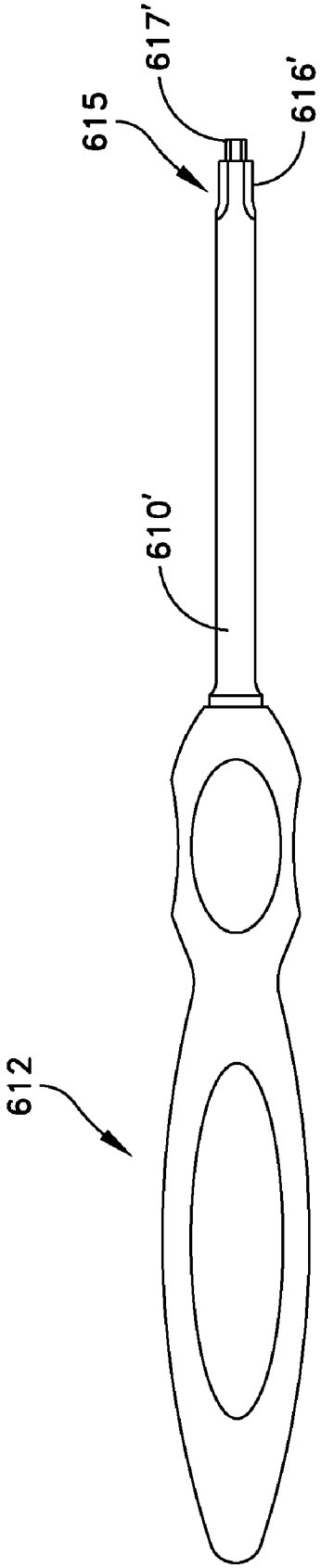

FIG. 4B

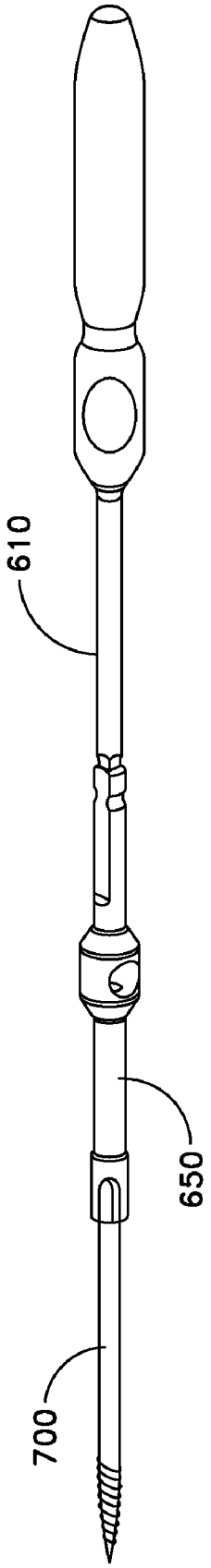

FIG. 4C

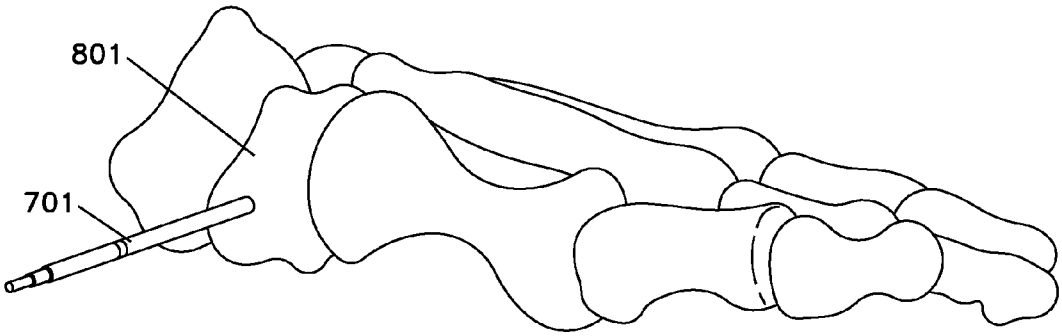

FIG. 5A

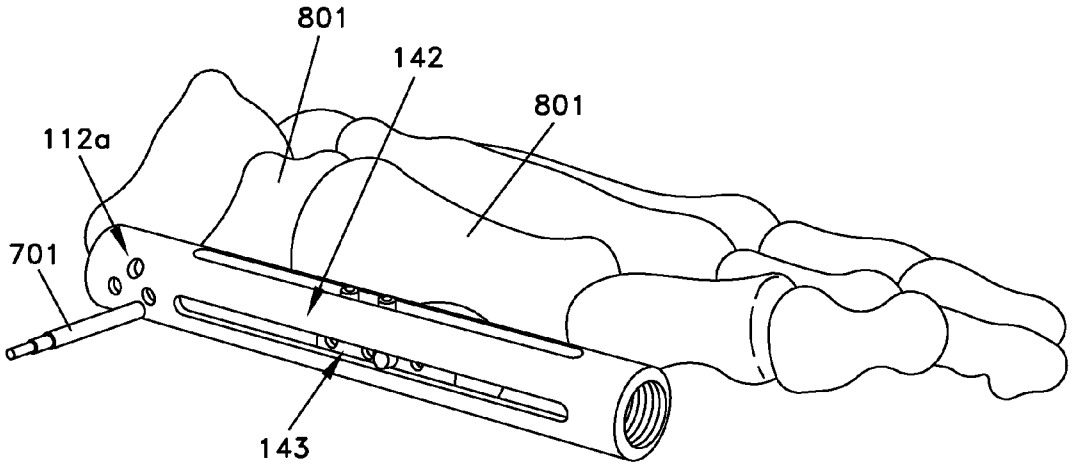

FIG. 5B

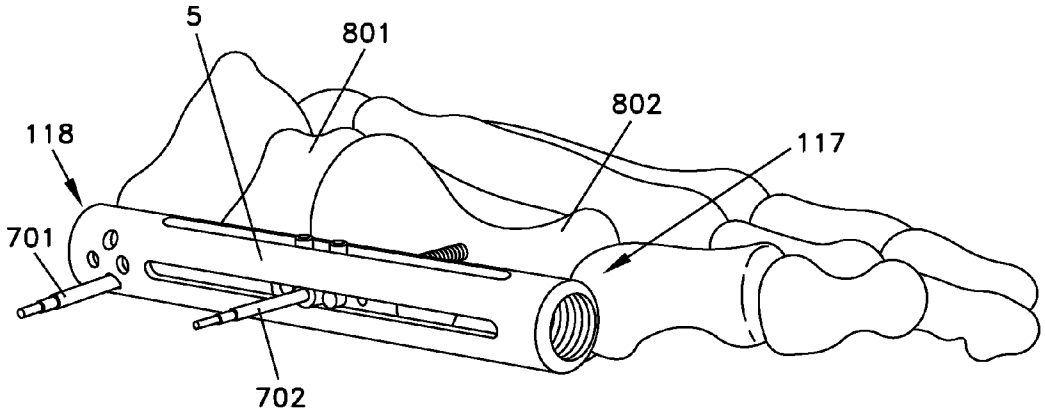

FIG. 5C

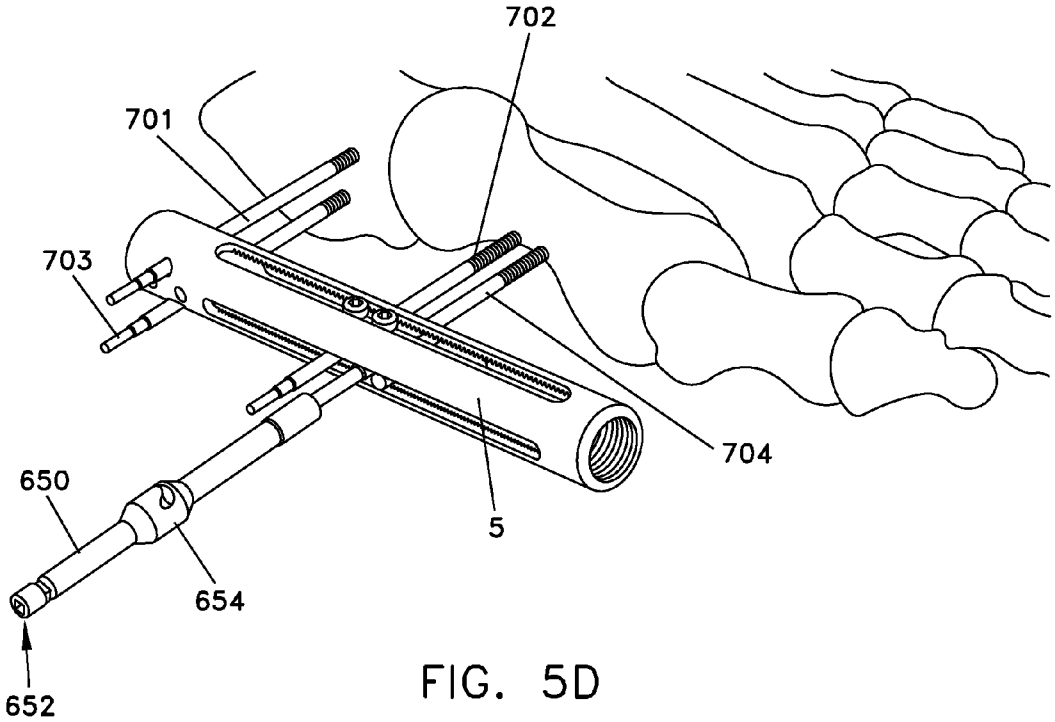

FIG. 5D

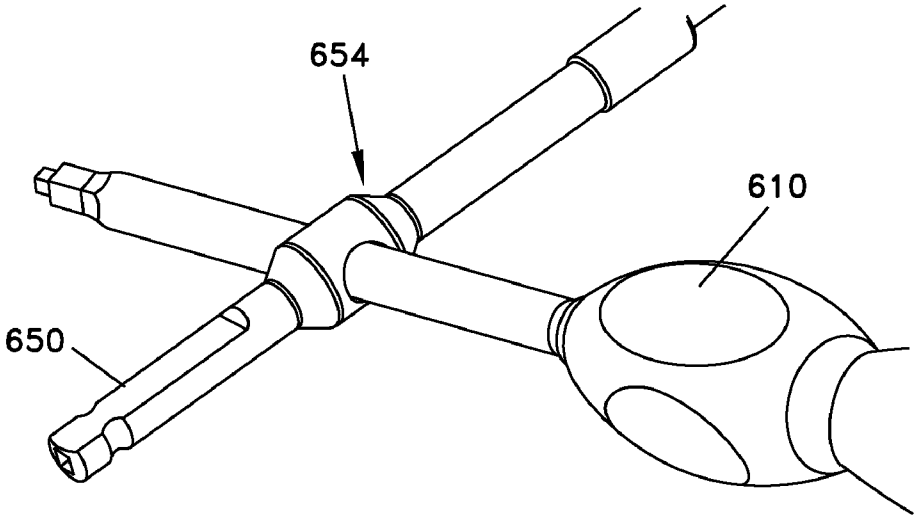

FIG. 5E

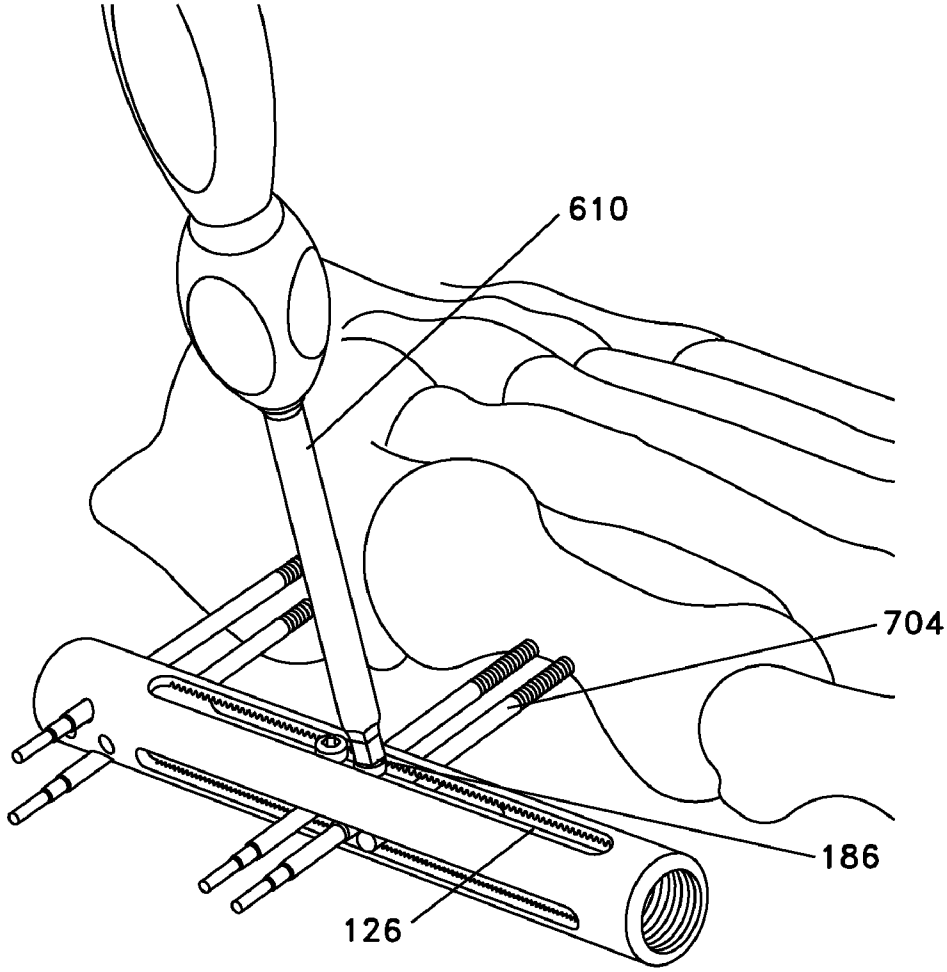

FIG. 5F

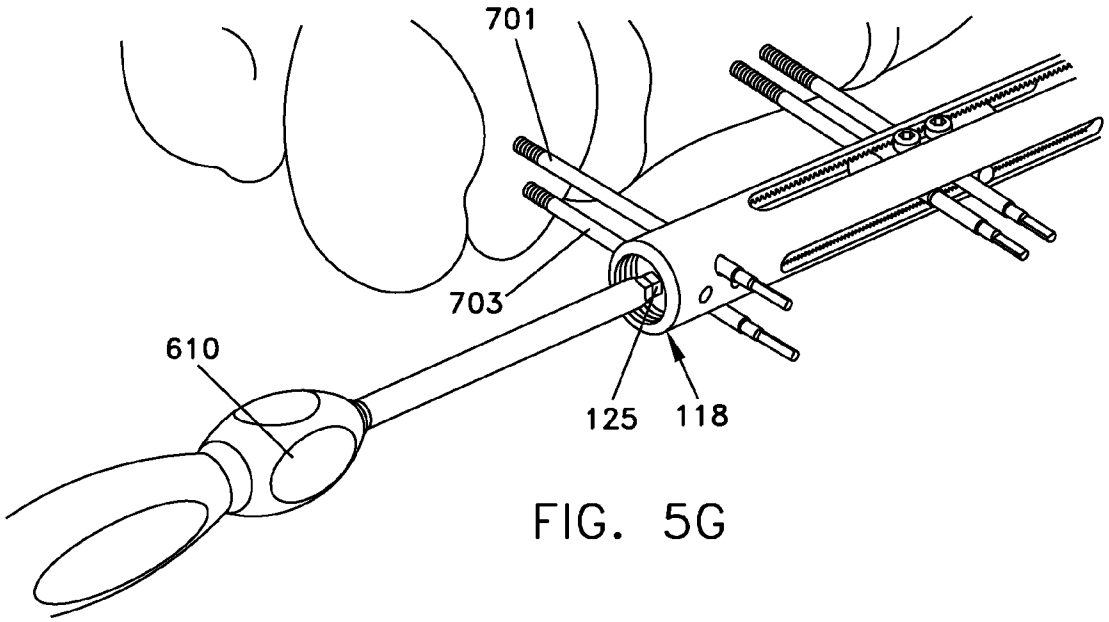

FIG. 5G

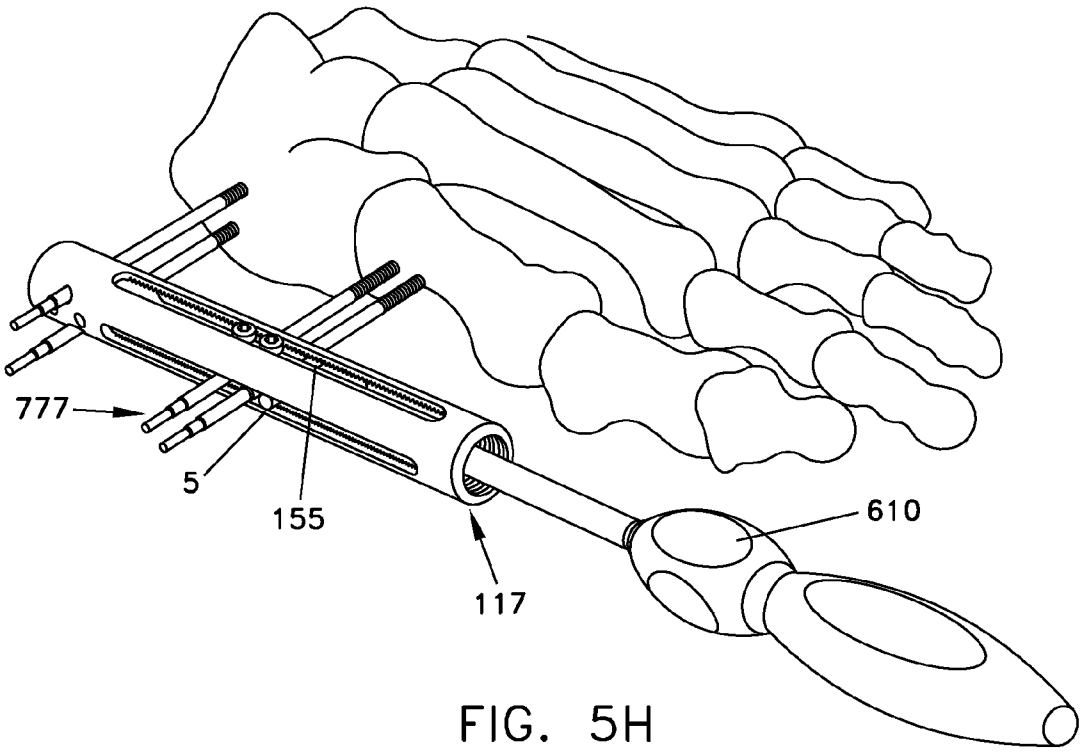

FIG. 5H

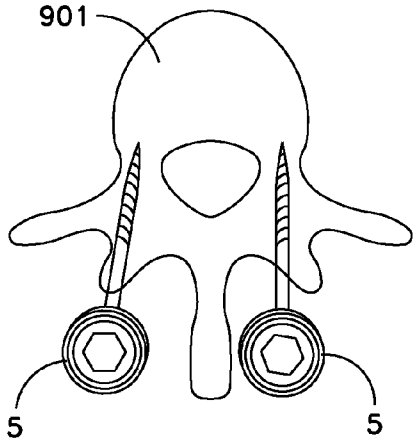

FIG. 6A

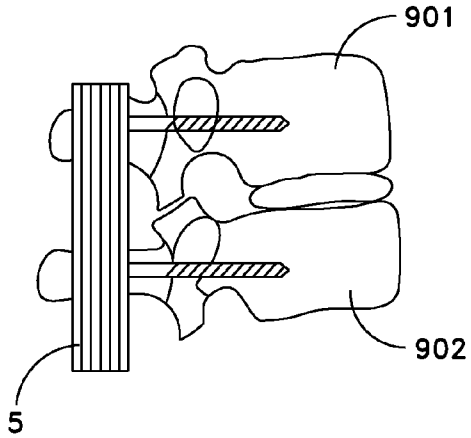

FIG. 6B

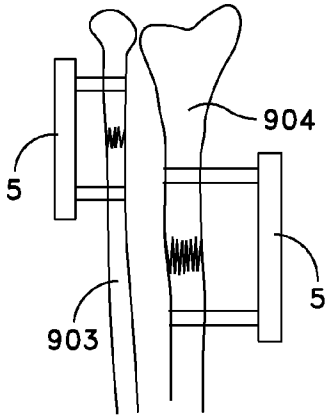

FIG. 7A

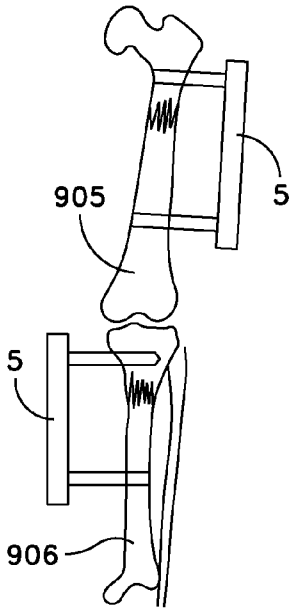

FIG. 7B

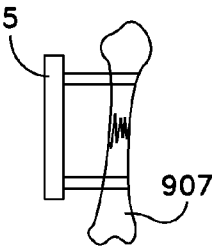

FIG. 7C

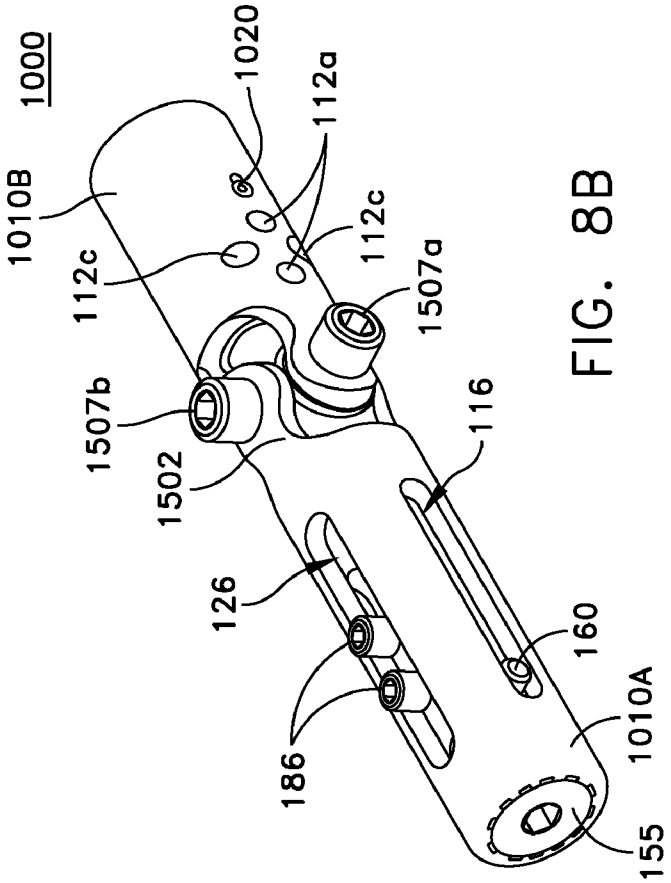
1000
1010B
1020
112a
112c
112c
1507a
1507b
1502
116
126
160
186
1010A
155

FIG. 8B

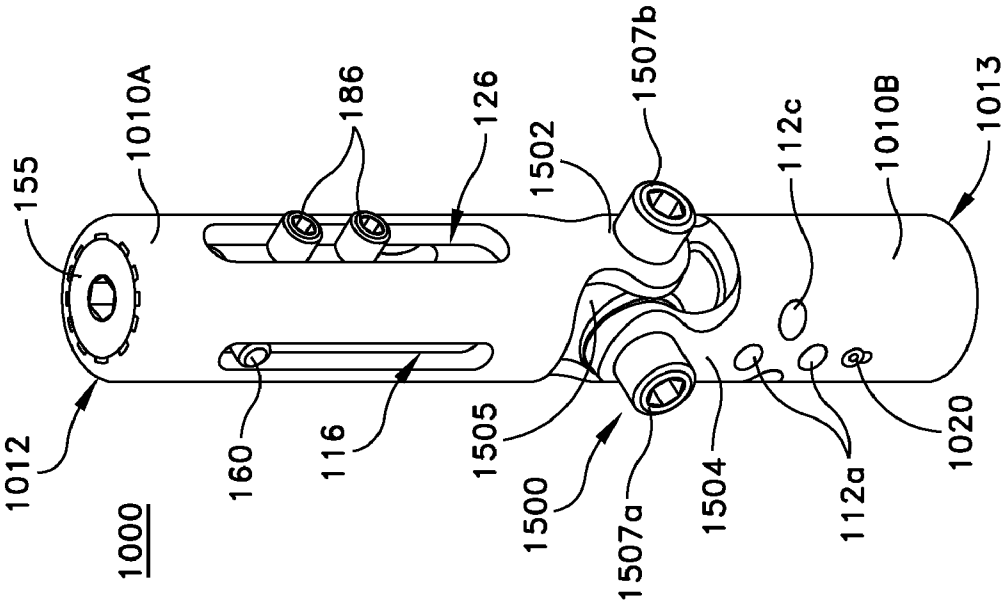
155
1010A
186
126
1502
1507b
112c
1010B
1013
1012
1000
160
116
1505
1500
1507a
1504
112a
1020

FIG. 8A

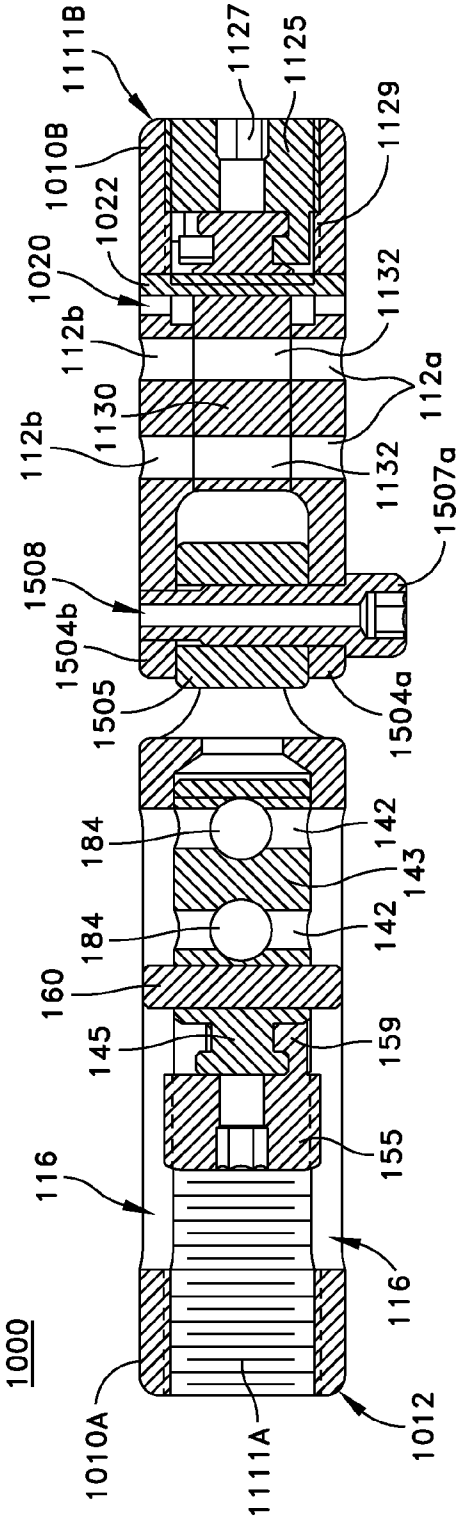
1000
1010A
1111A
1012
116
116
155
159
145
160
184
184
142
142
143
1504a
1505
1504b
1508
1507a
112b
1130
112b
1132
1132
112a
1020
1022
1010B
1111B
1127
1125
1129

FIG. 9A

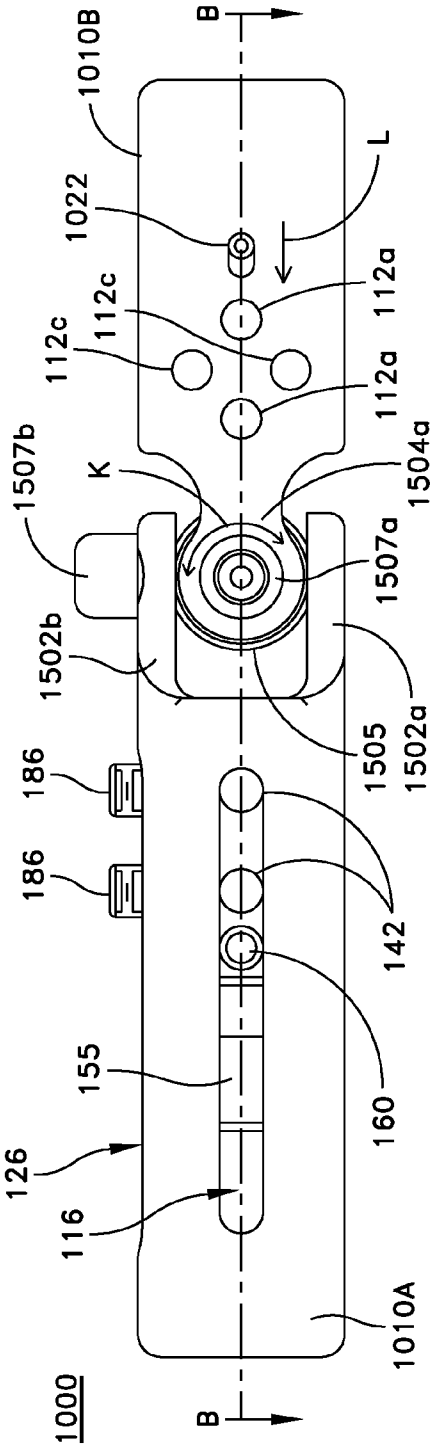
1000
B
B
1010A
116
126
155
160
142
186
186
1502b
1505
1502a
1507b
K
1507a
1504a
112c
112c
112a
112a
1022
1010B
L

FIG. 9B

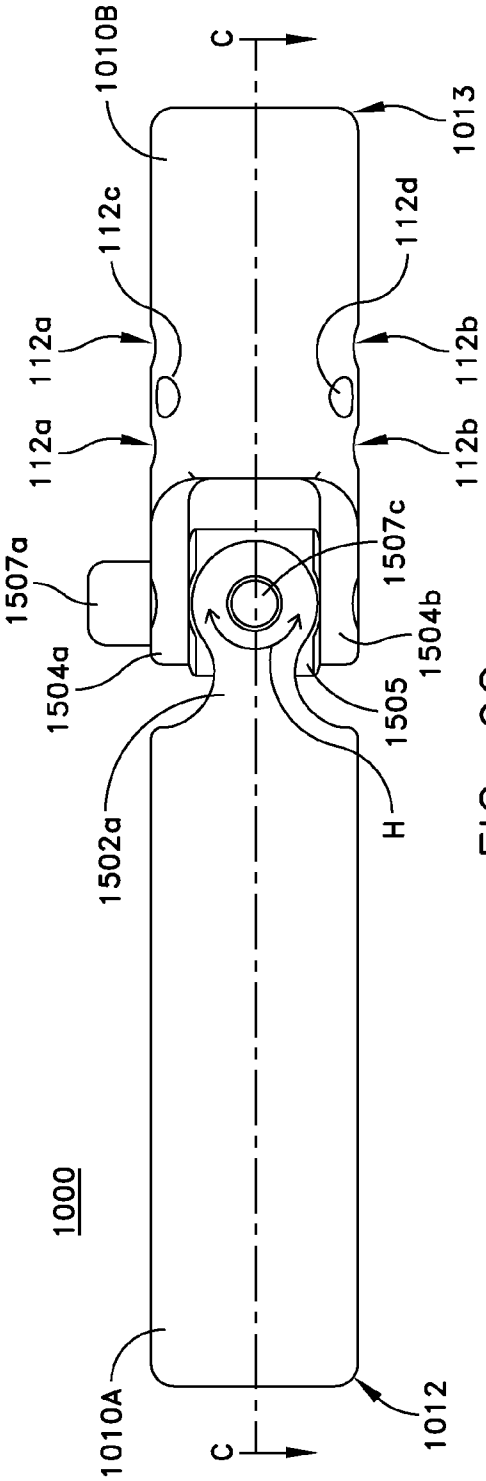
1010B
C
1013
112c
112d
112a
112b
112a
112b
1507a
1507c
1504a
1504b
1505
1502a
H
1000
1010A
C
1012

FIG. 9C

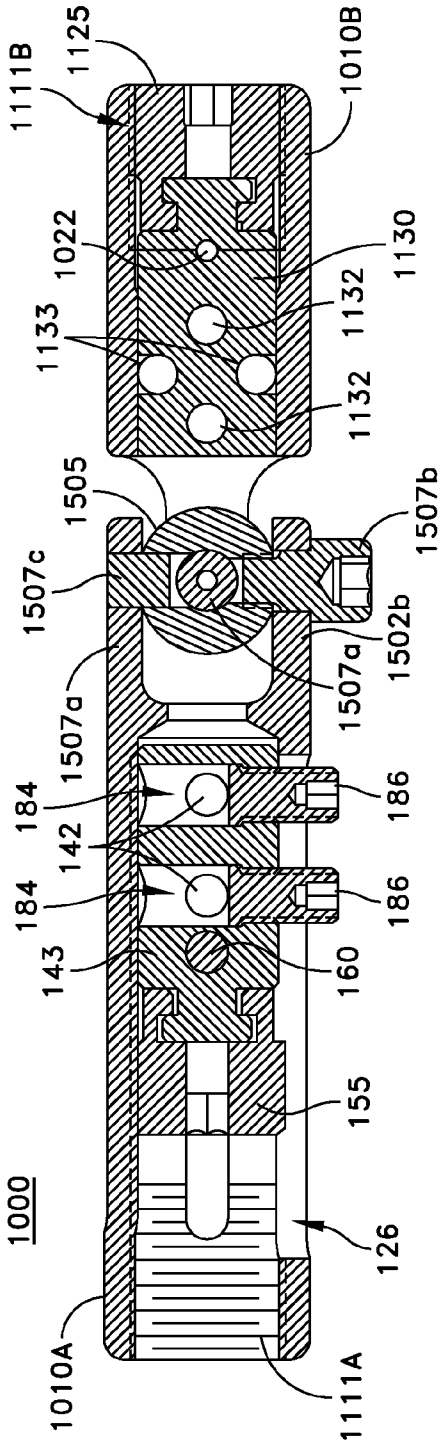
1111B
1125
1010B
1022
1130
1133
1132
1132
1505
1507b
1507c
1502b
1507a
1507a
184
186
142
184
186
143
160
155
1000
126
1010A
1111A

FIG. 9D

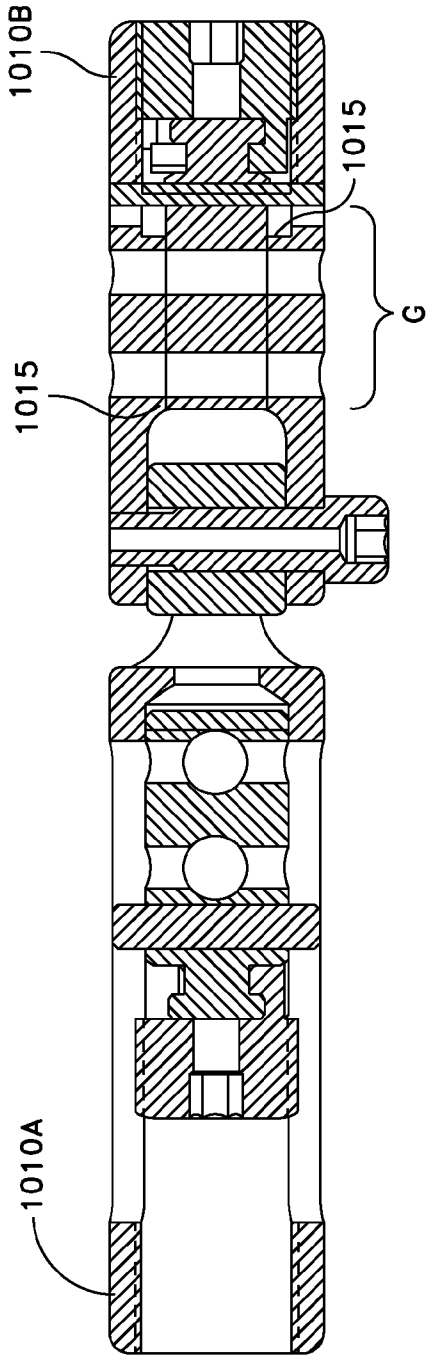
1010B
1015
G
1015
1010A

FIG. 9E

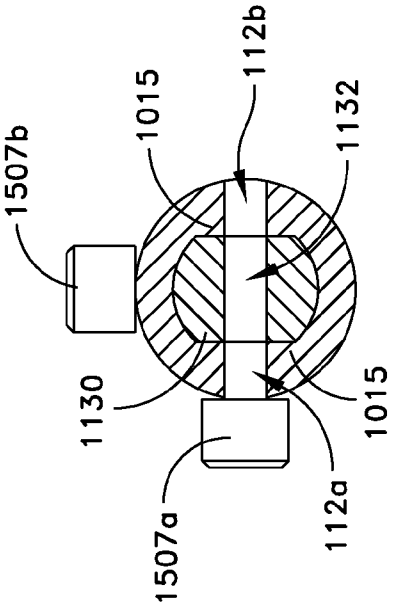
1507b
1015
112b
1132
1130
1015
1507a
112a

FIG. 9F

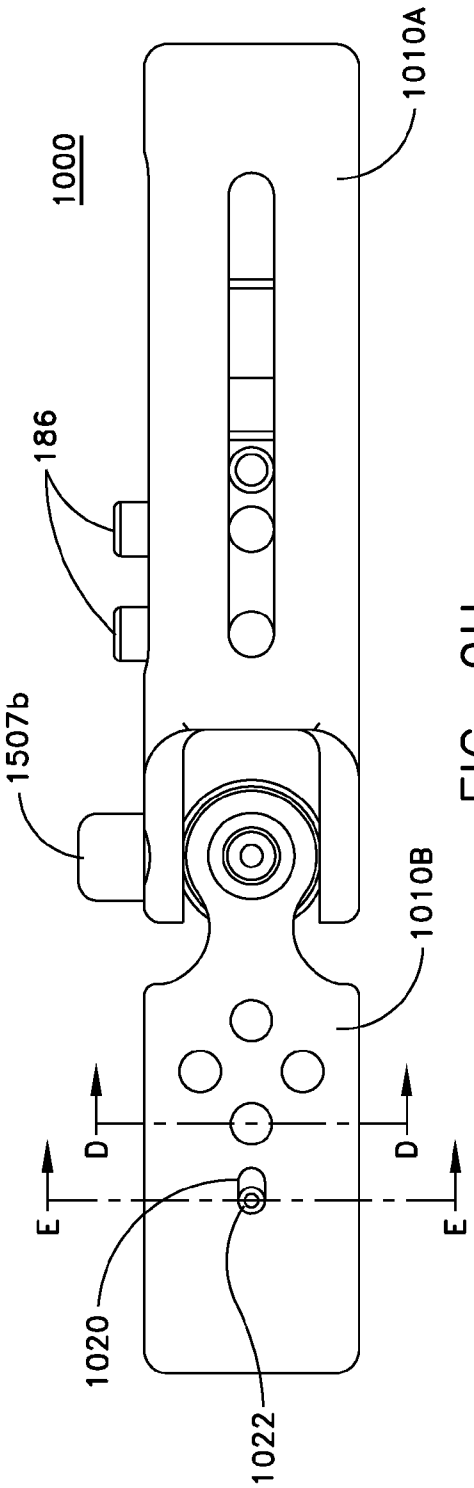
1000
1010A
186
1507b
1010B
D
D
E
E
1020
1022

FIG. 9H

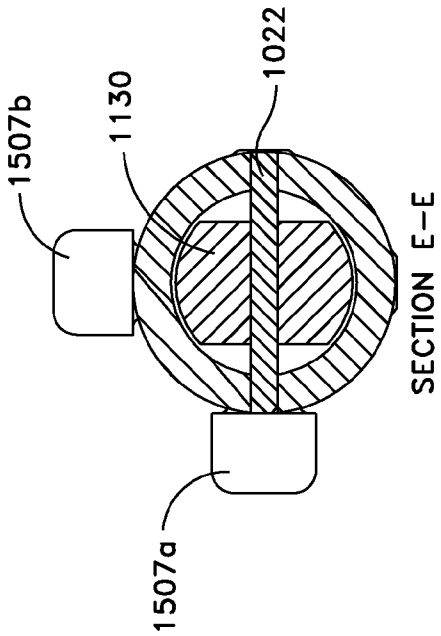
1507b
1130
1022
1507a
SECTION E-E

FIG. 9G

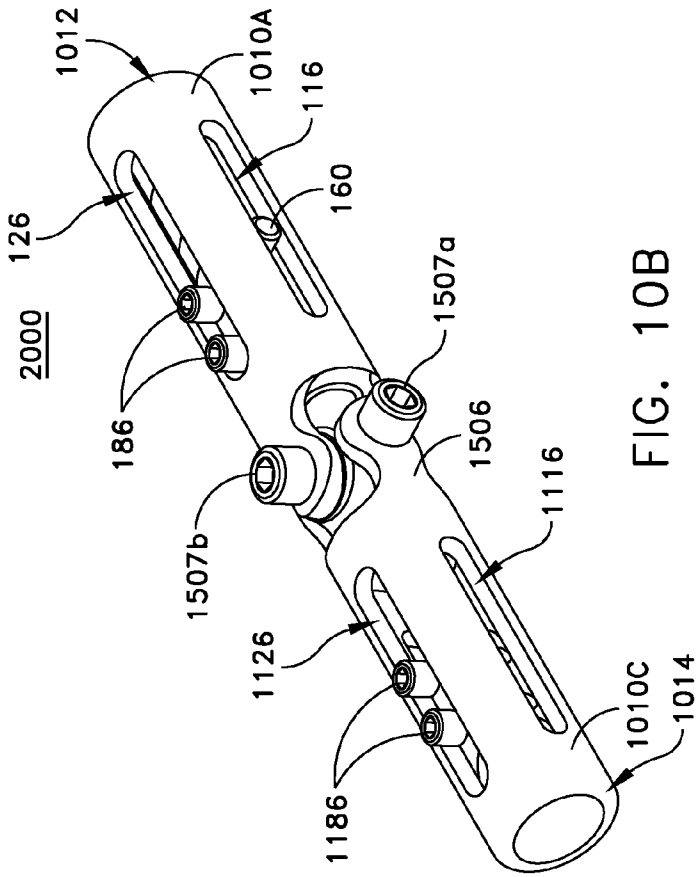

FIG. 10B

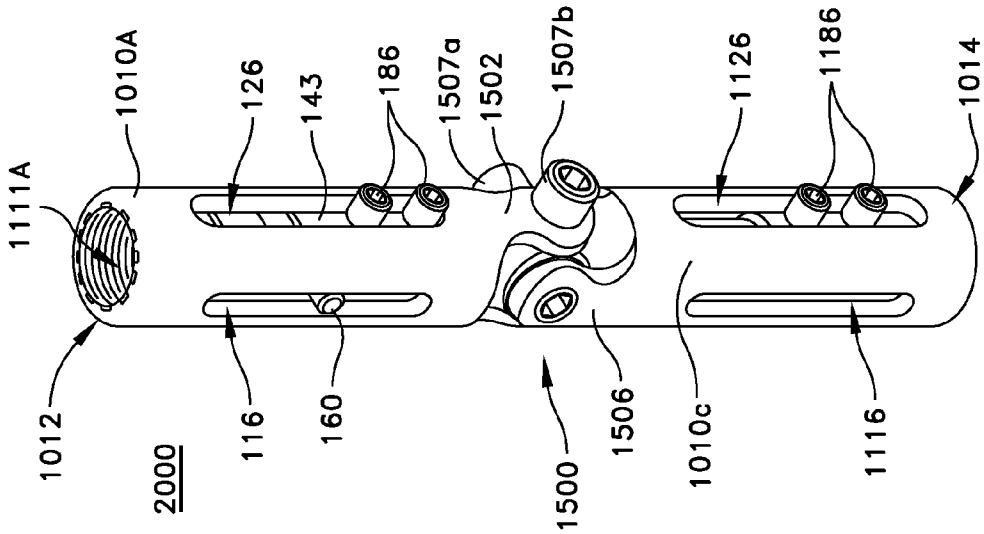

FIG. 10A

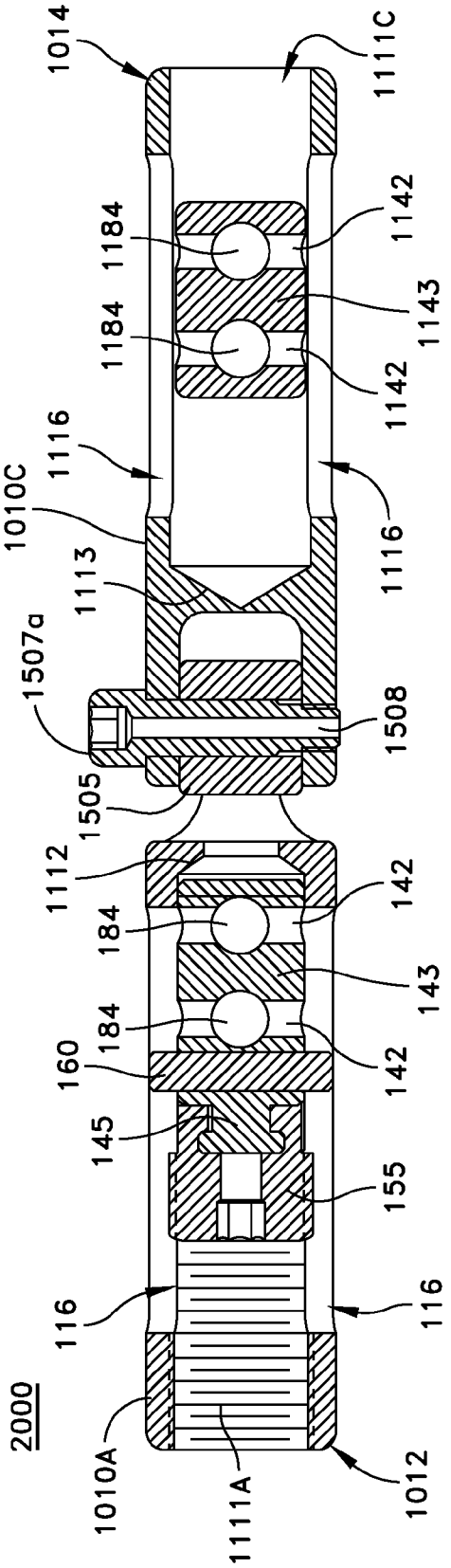

FIG. 10C

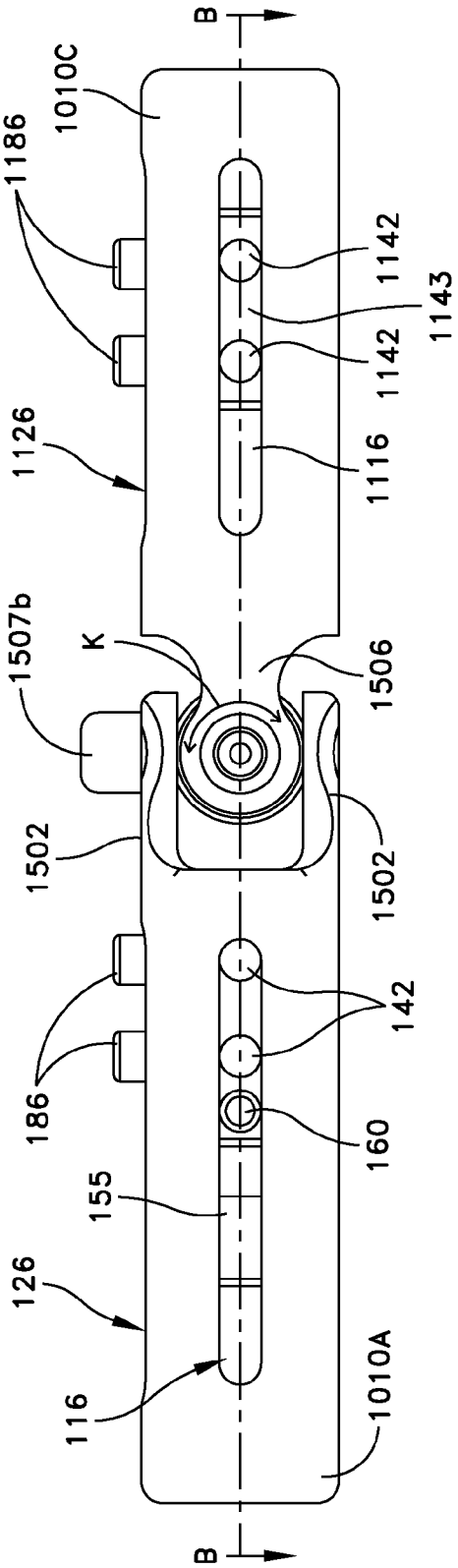

FIG. 10D

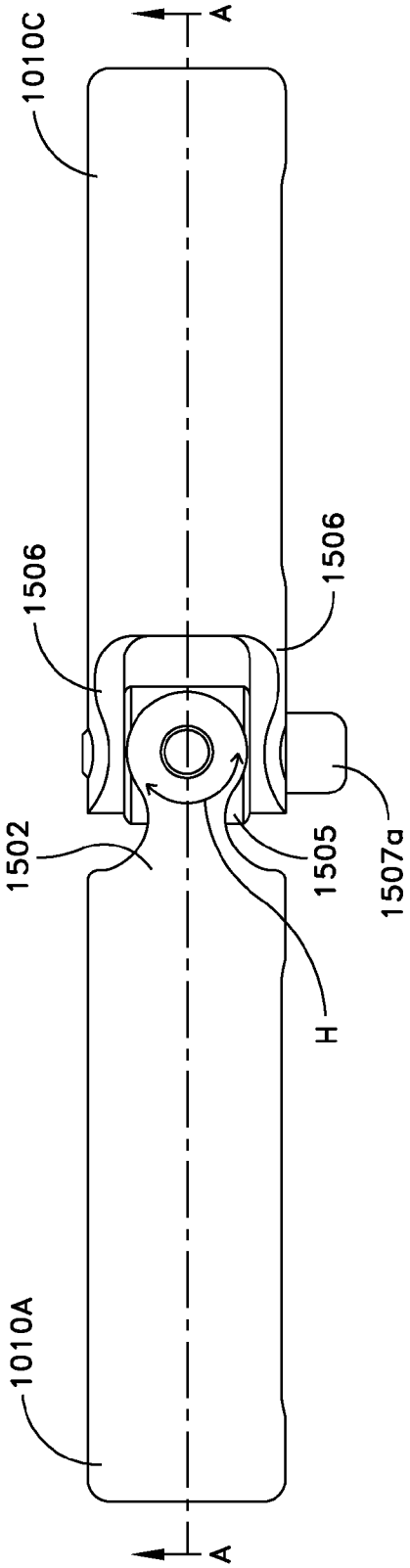

FIG. 10E

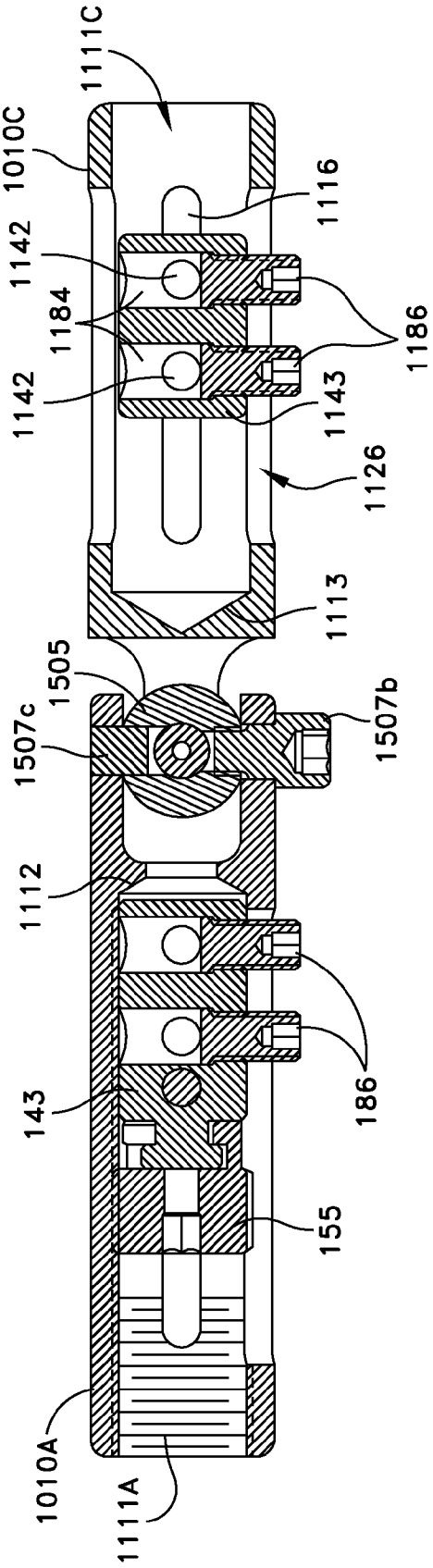

FIG. 10F

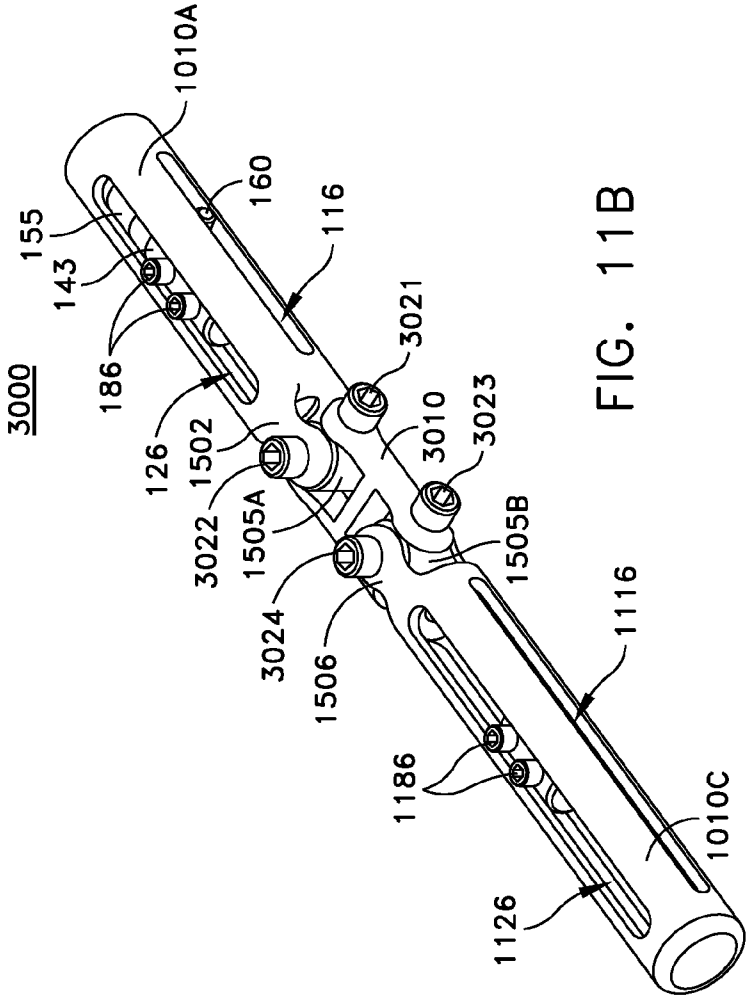

FIG. 11B

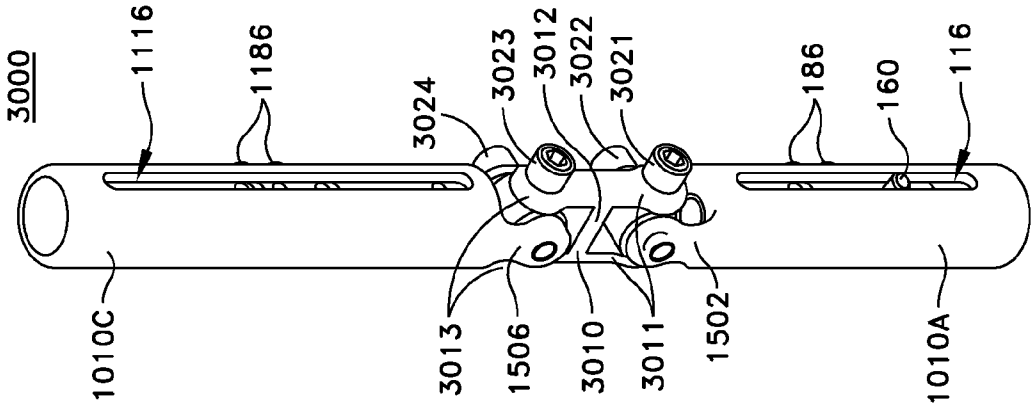

FIG. 11A

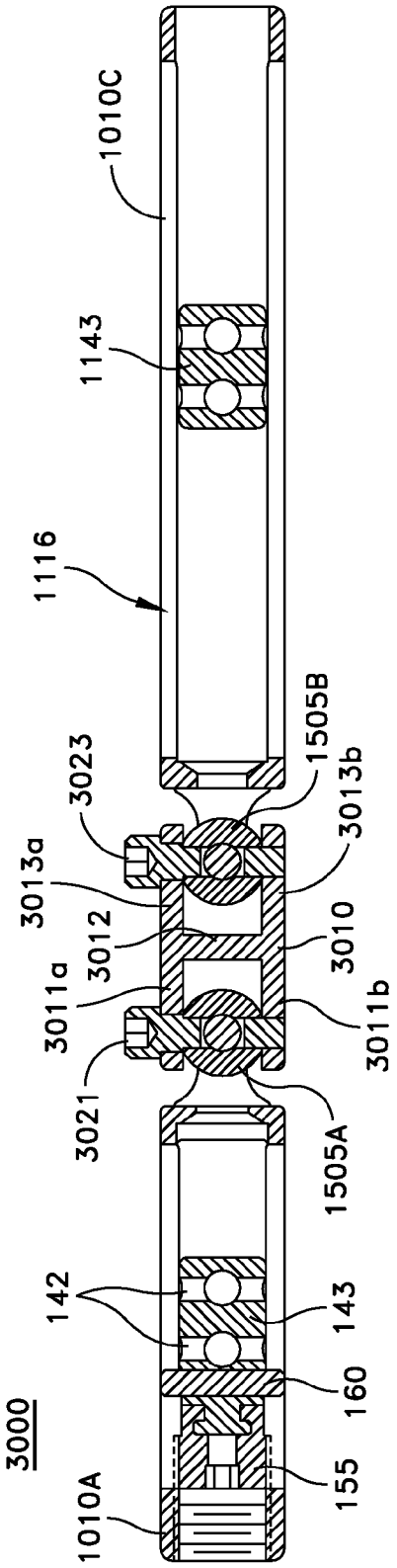

FIG. 11C

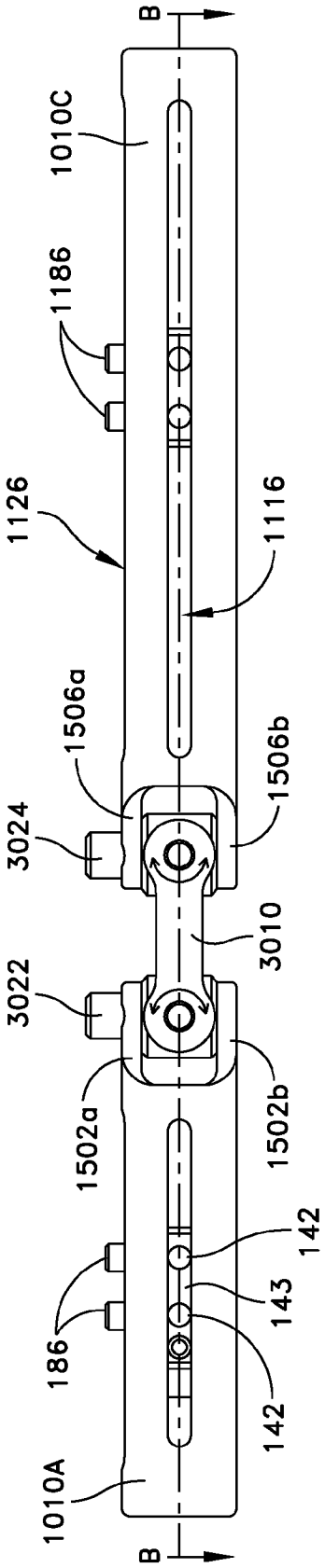

FIG. 11D

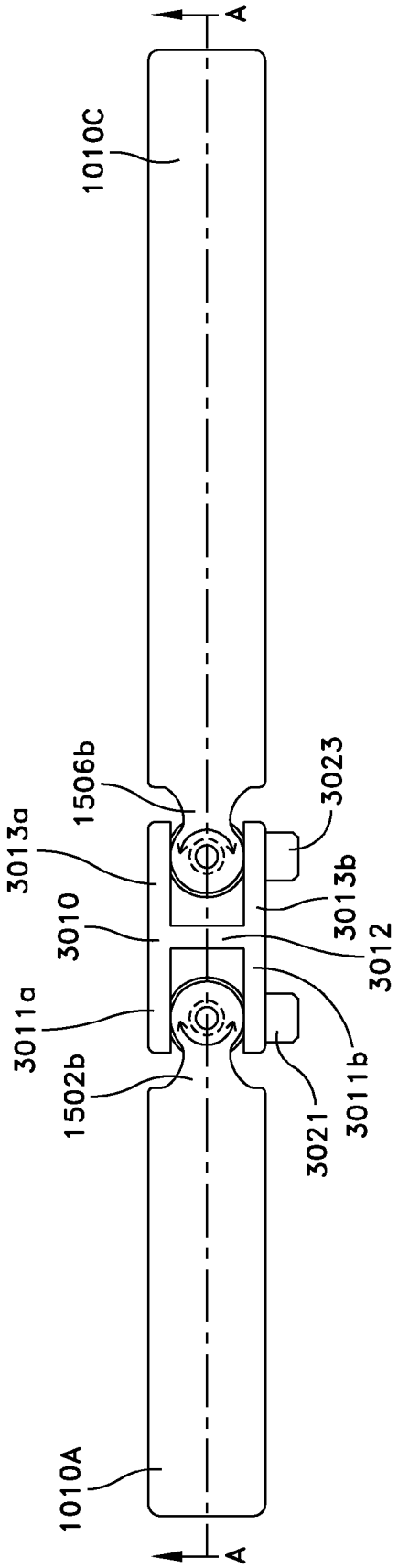

FIG. 11E

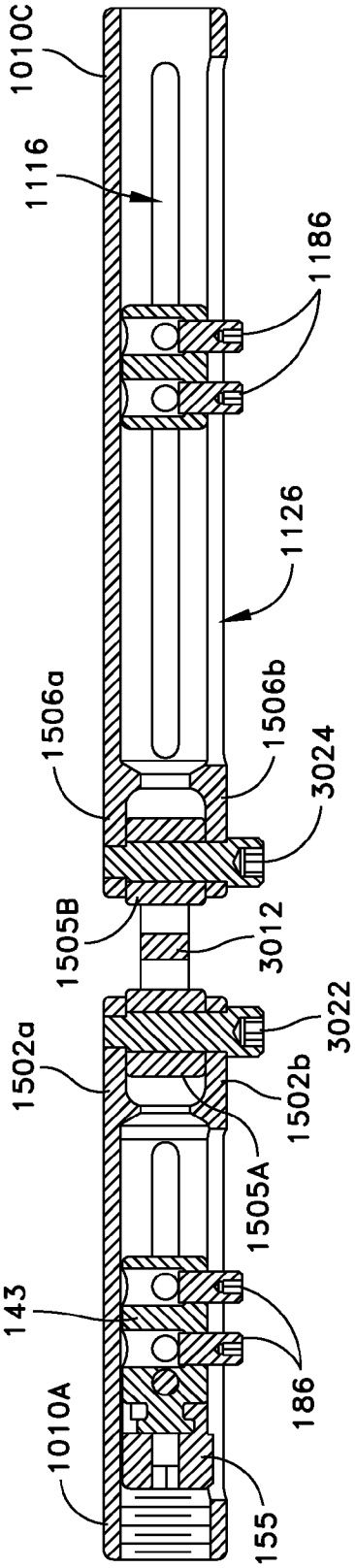

FIG. 11F

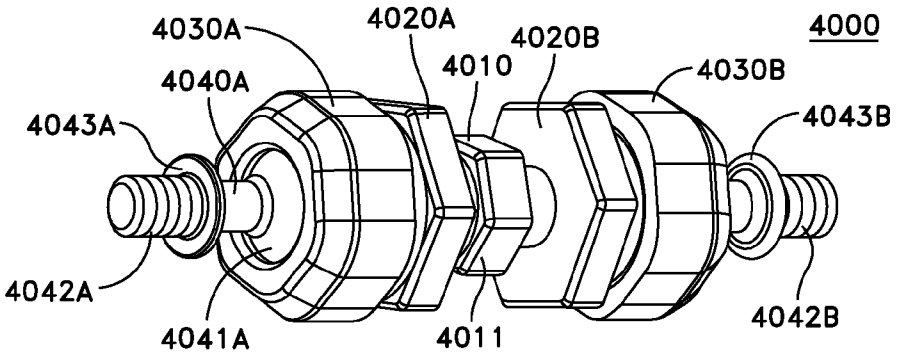

FIG. 12A

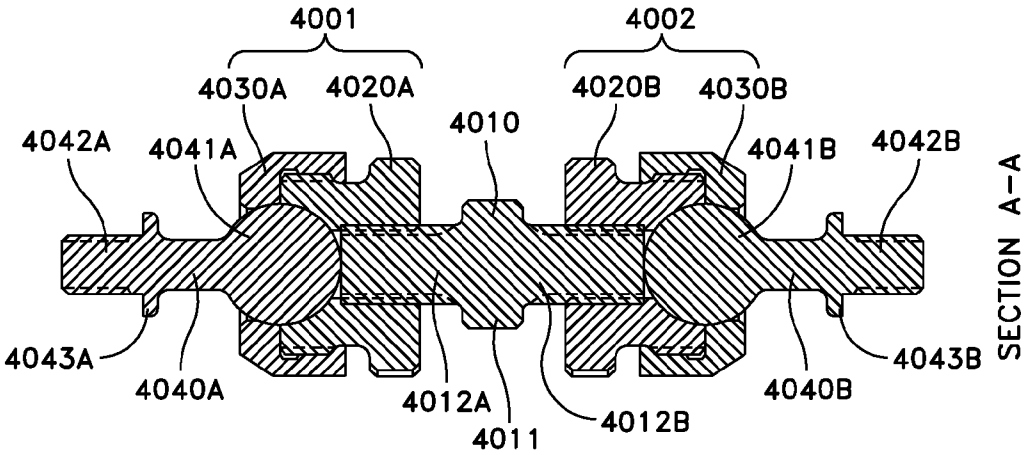

FIG. 12B

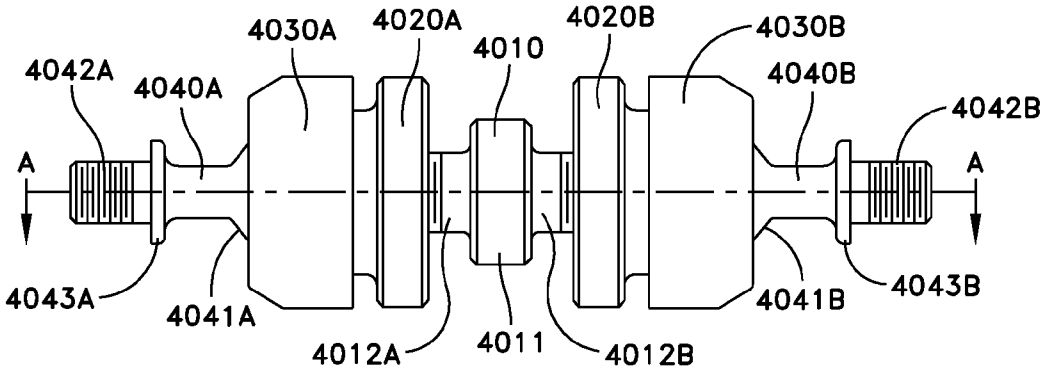

FIG. 12C

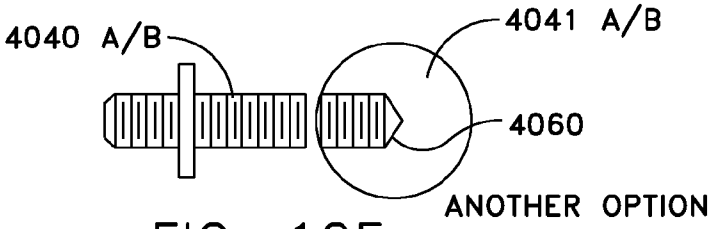

FIG. 12F

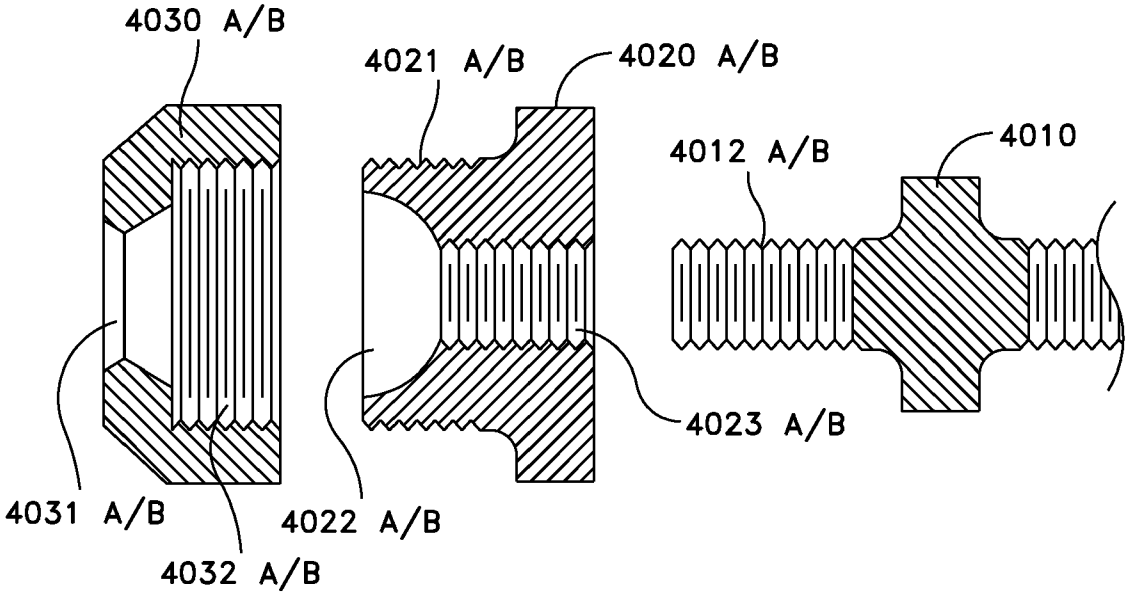

FIG. 12D

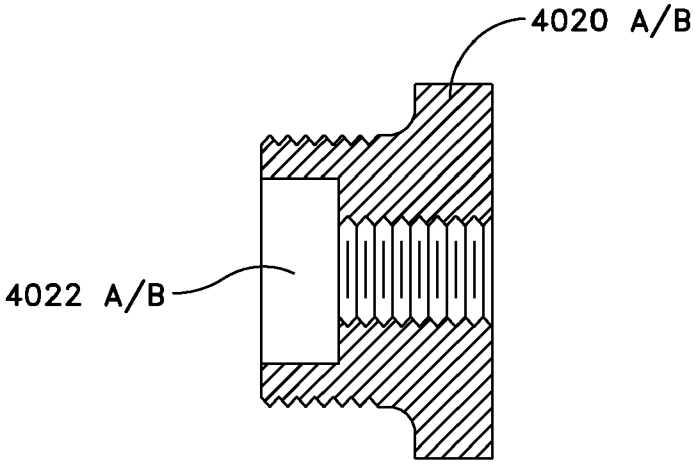

FIG. 12E

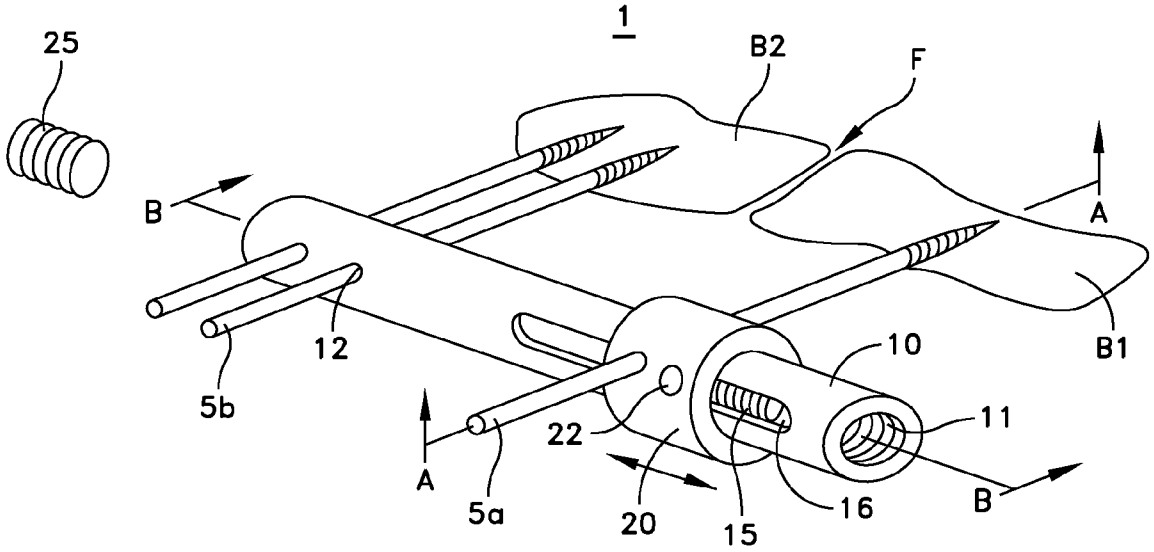

FIG. 13A

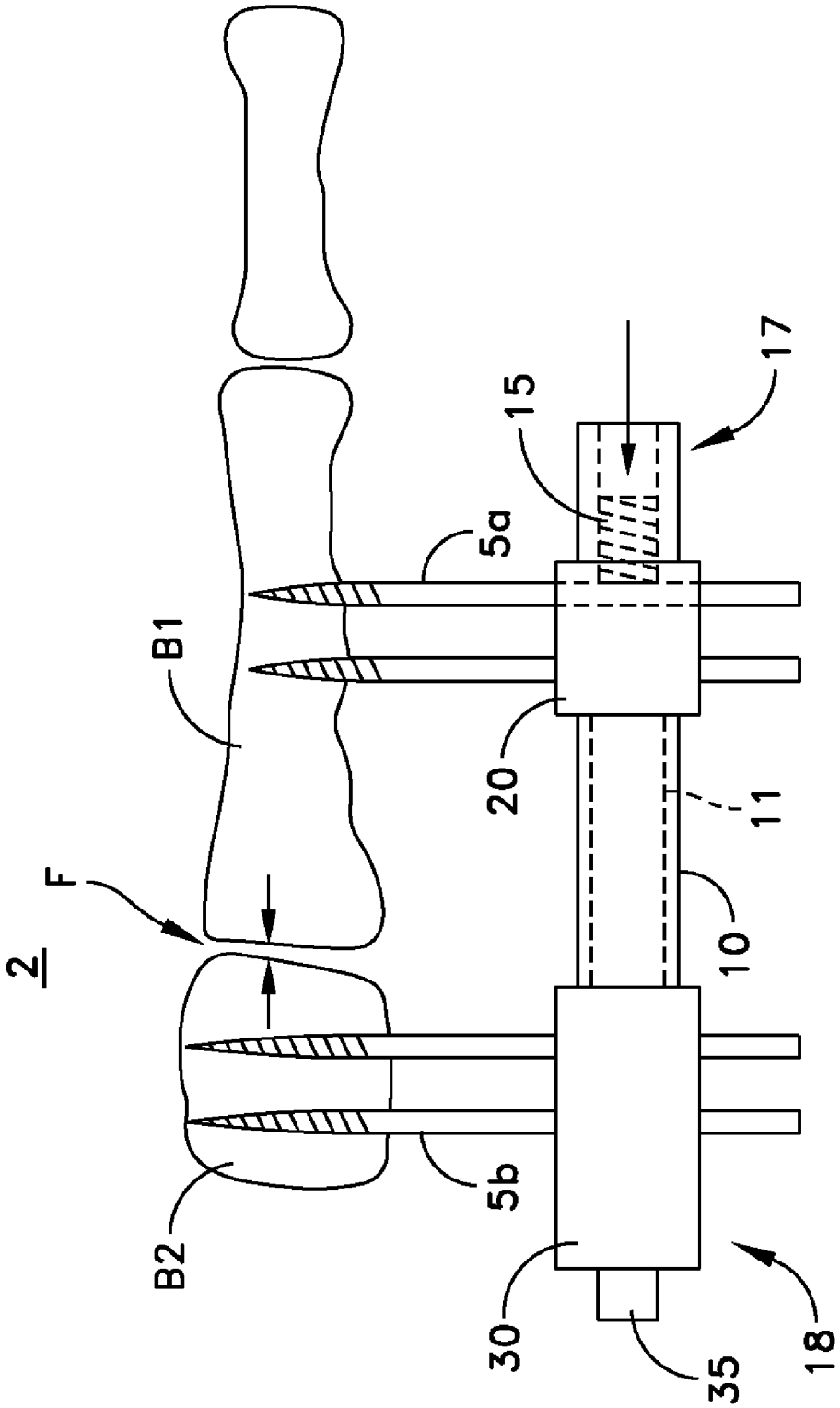

FIG. 13B

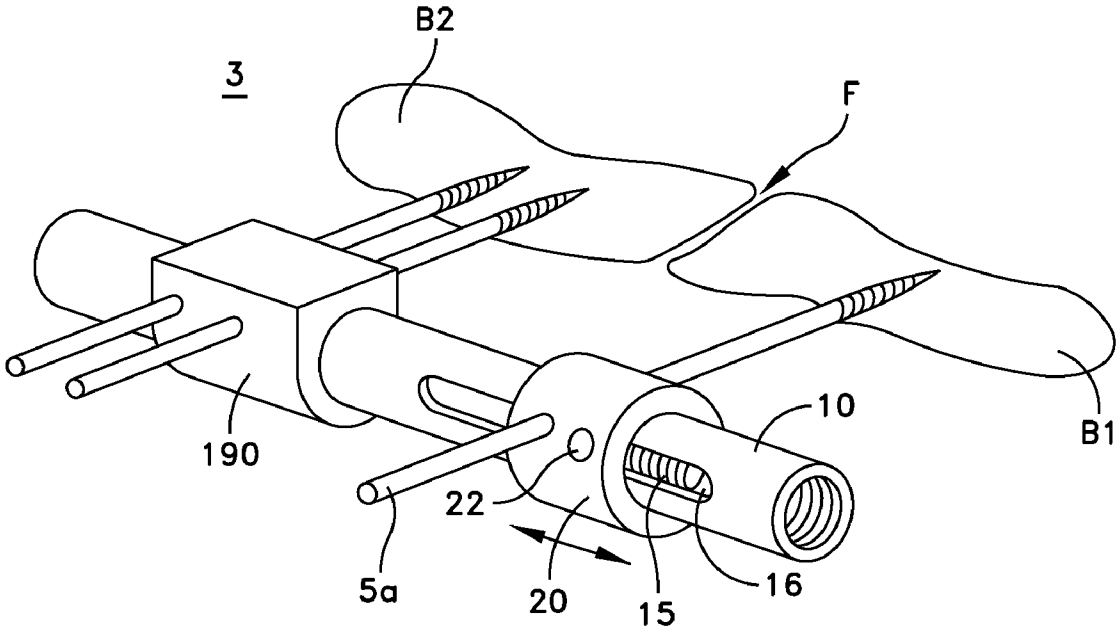

FIG. 13C

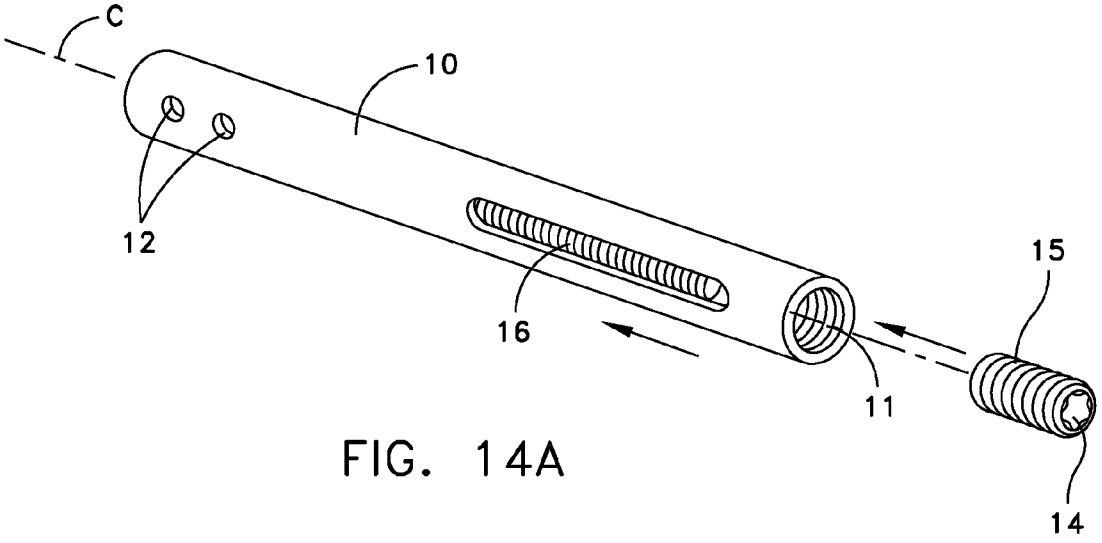

FIG. 14A

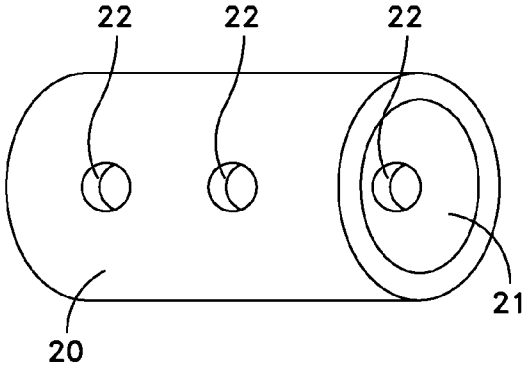

FIG. 14B

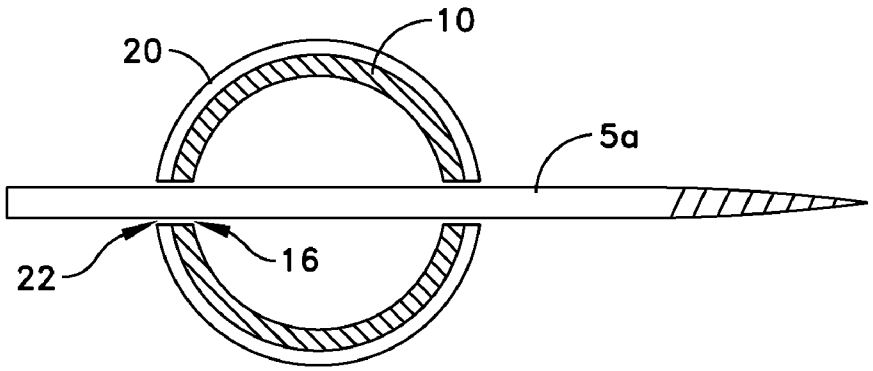

FIG. 14C

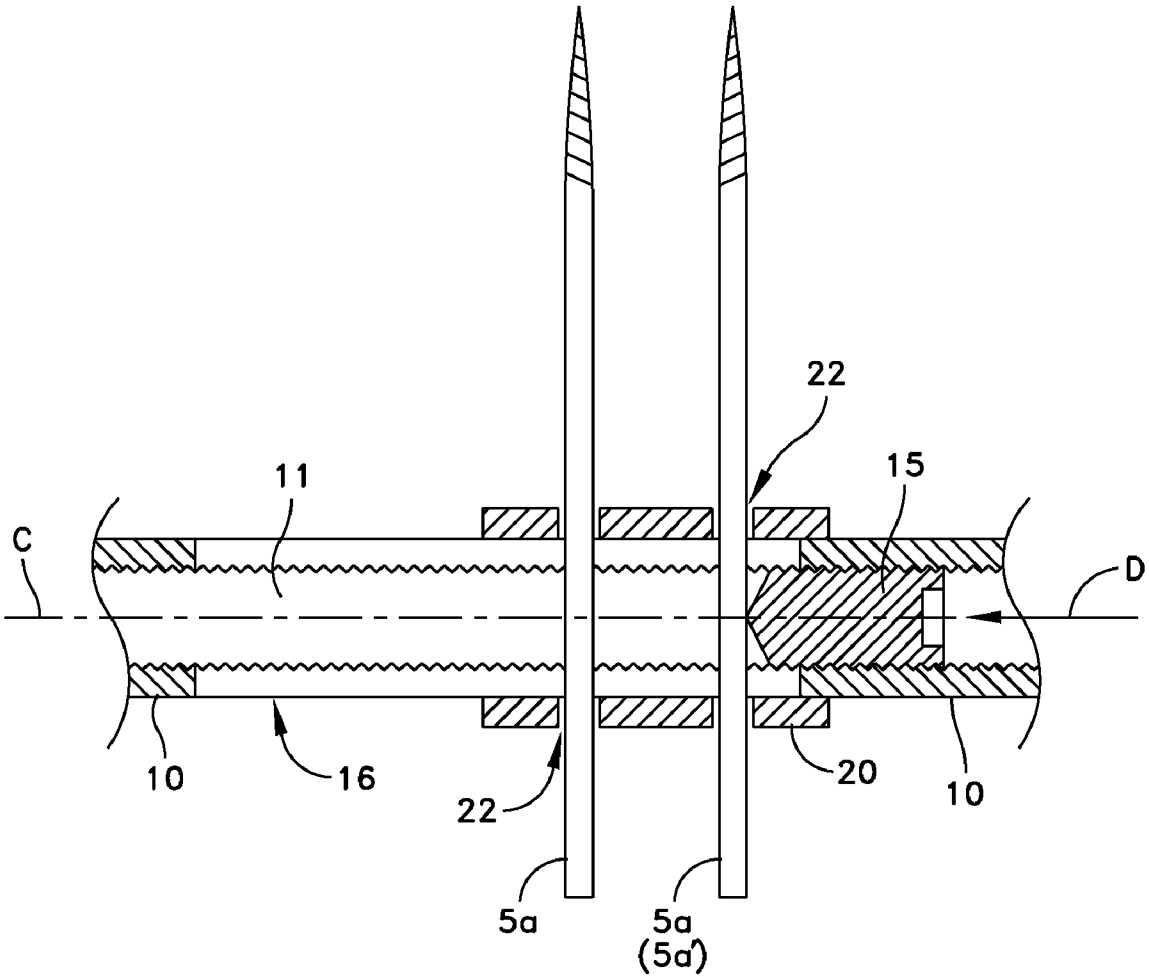

FIG. 14D

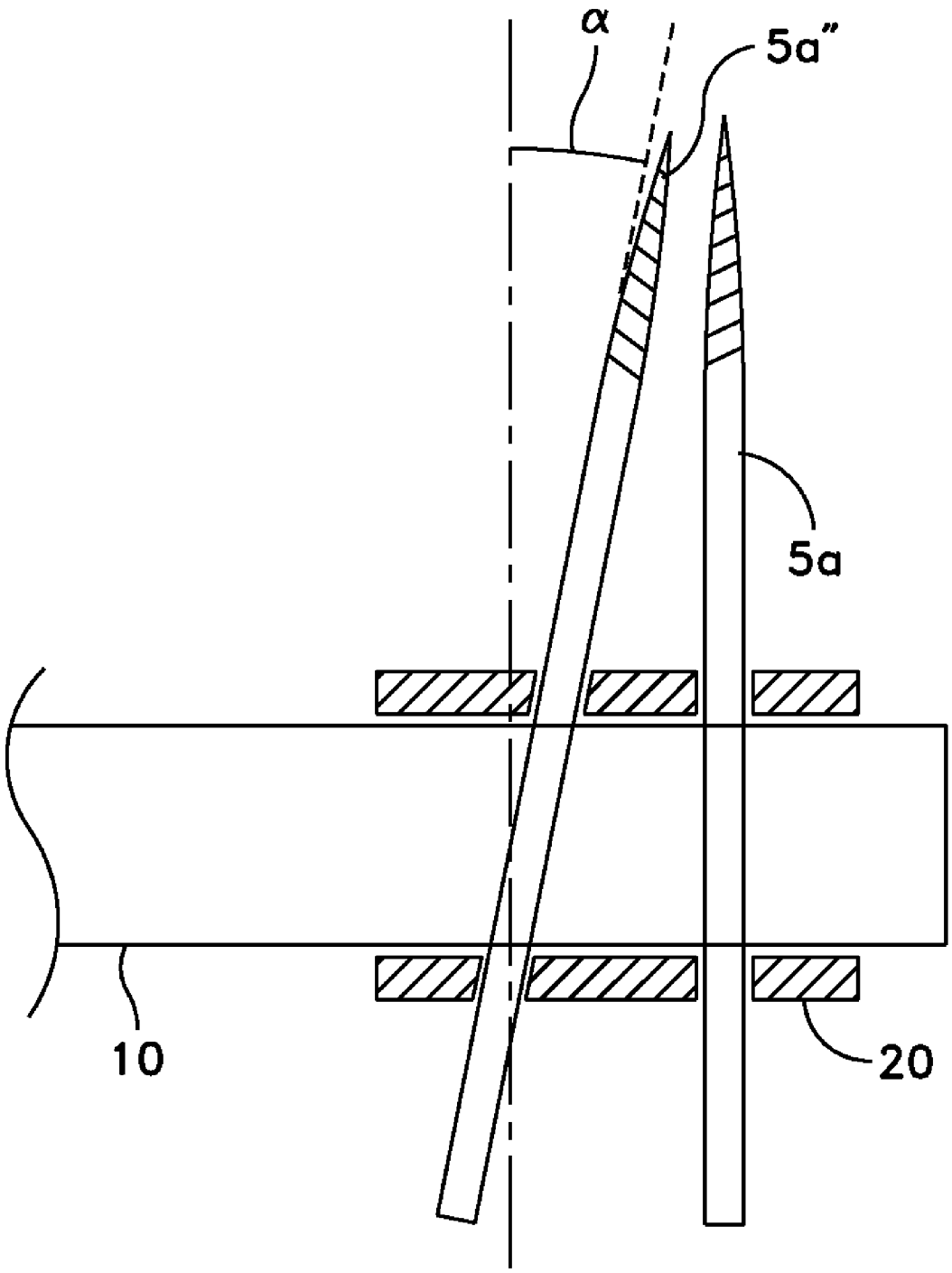

FIG. 14E

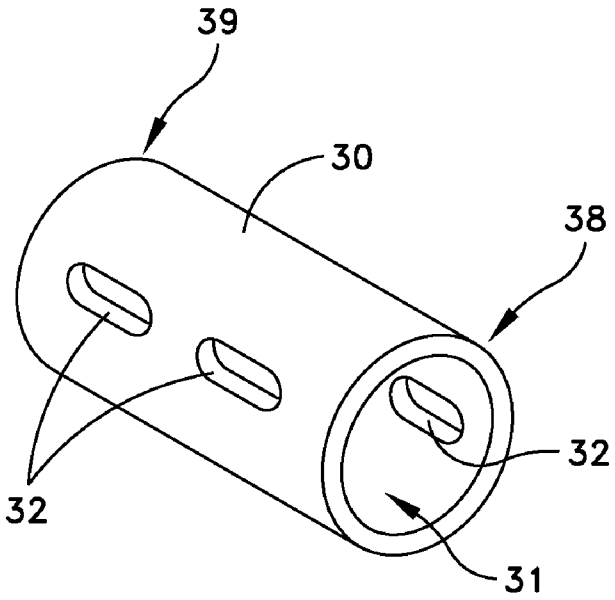

FIG. 15A

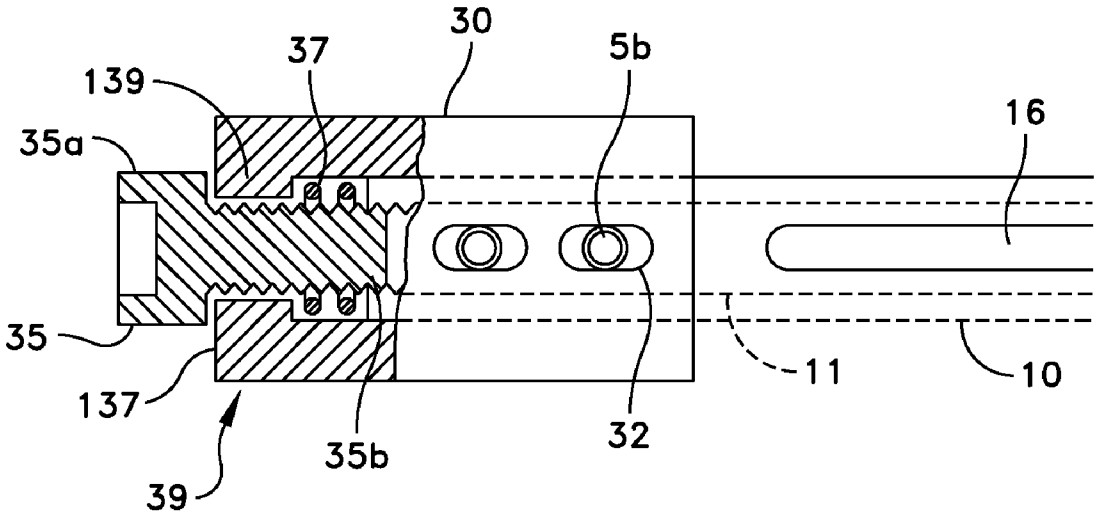

FIG. 15B

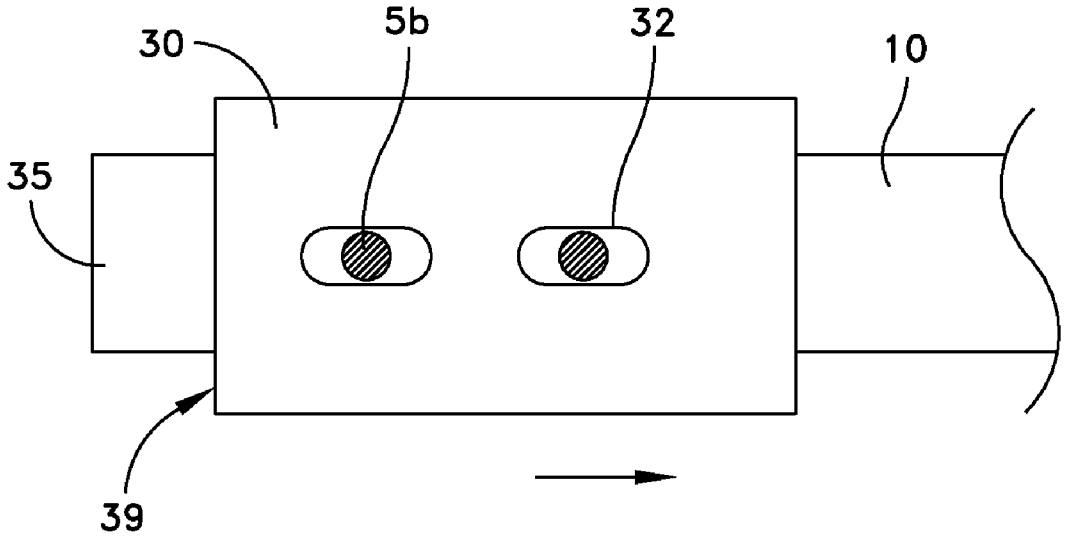

FIG. 15C

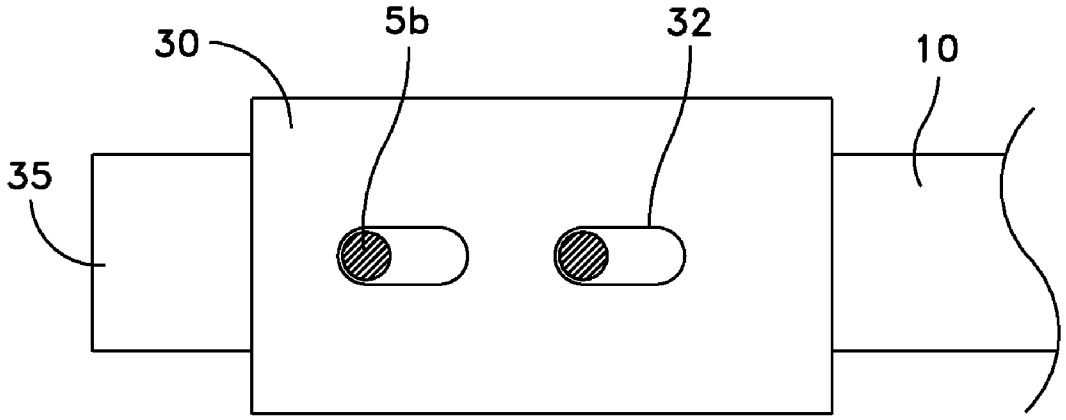

FIG. 15D

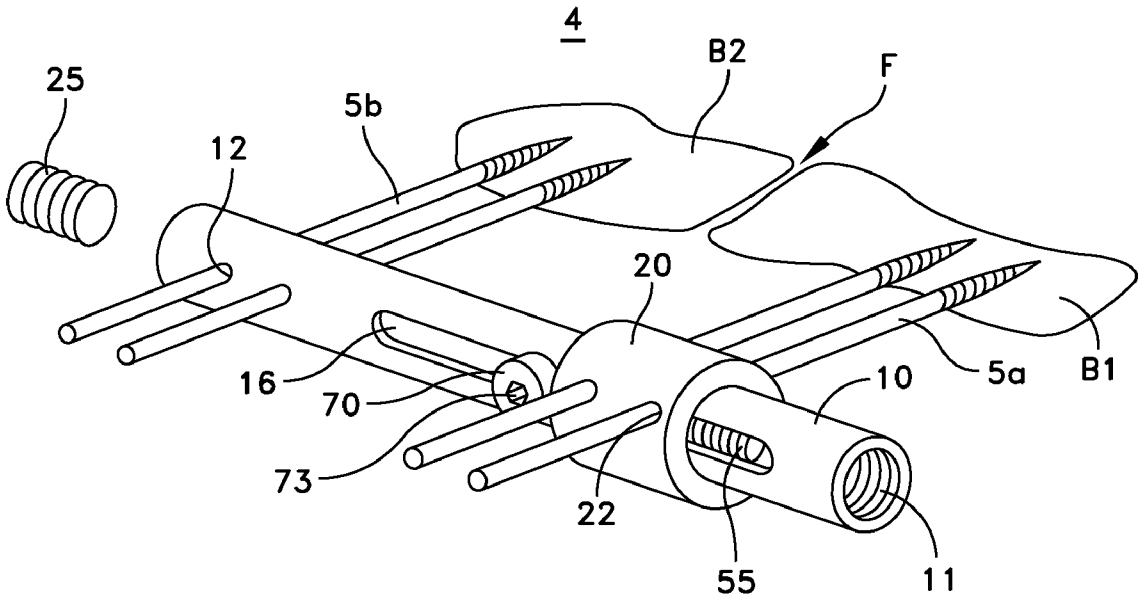

FIG. 16

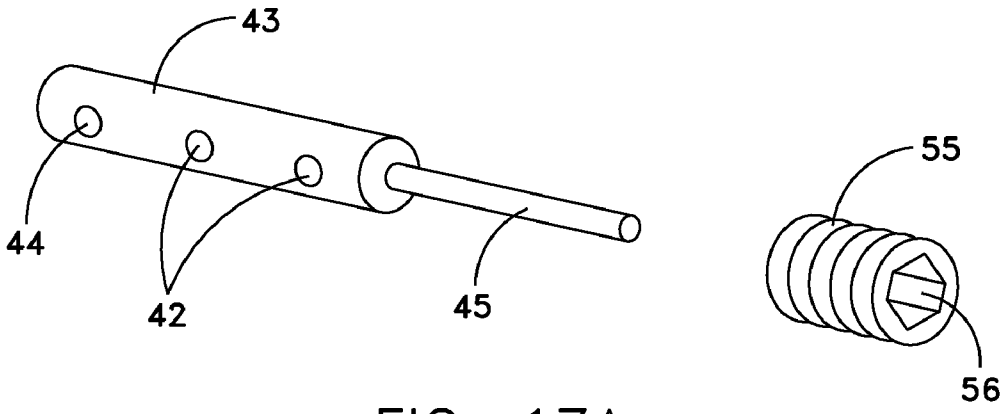

FIG. 17A

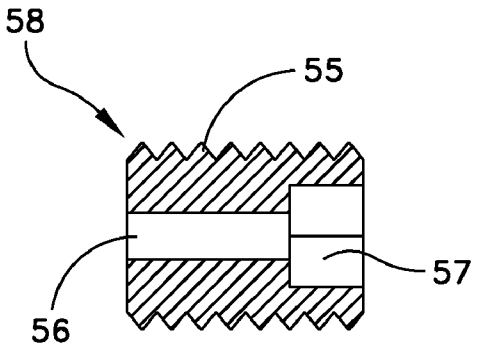

FIG. 17B

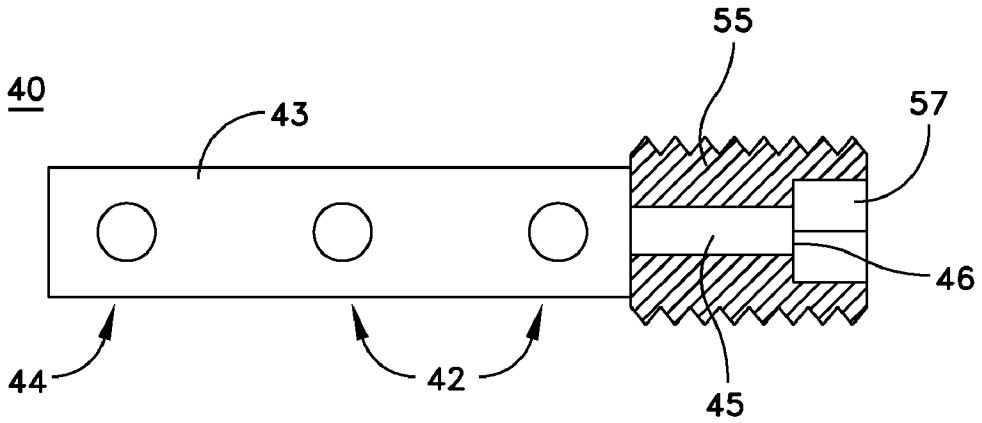

FIG. 17C

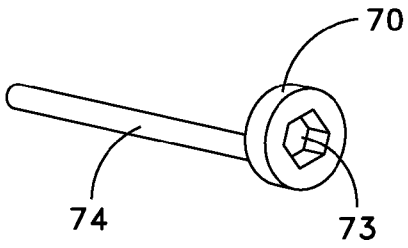

FIG. 17D

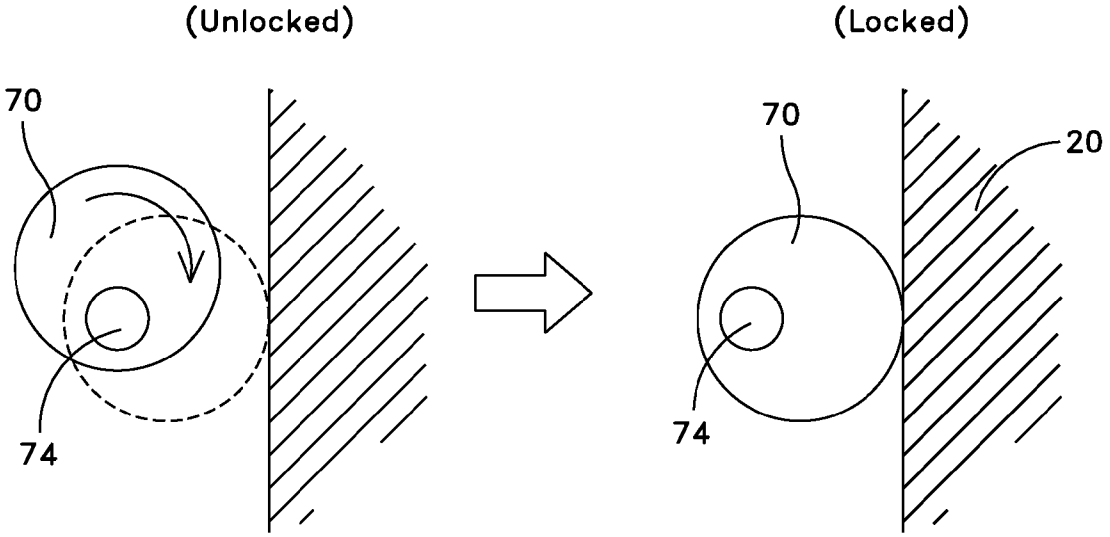

FIG. 17E

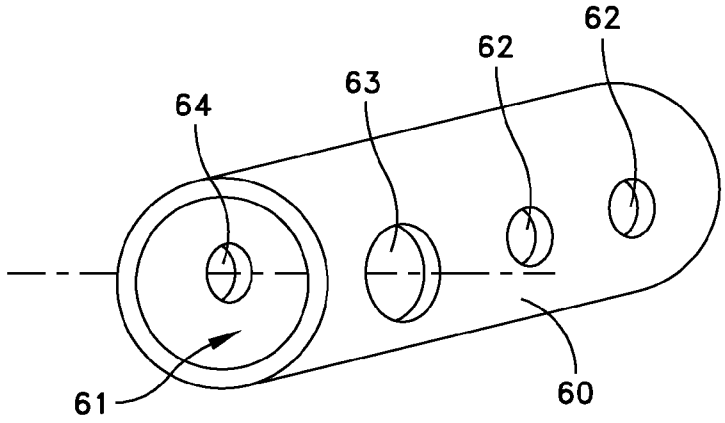

FIG. 18A

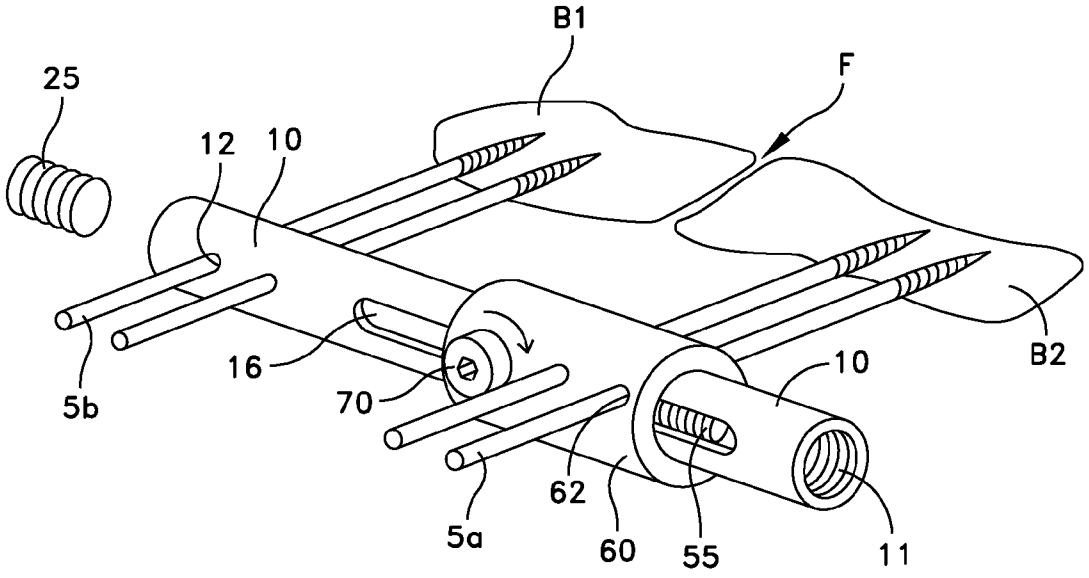

FIG. 18B

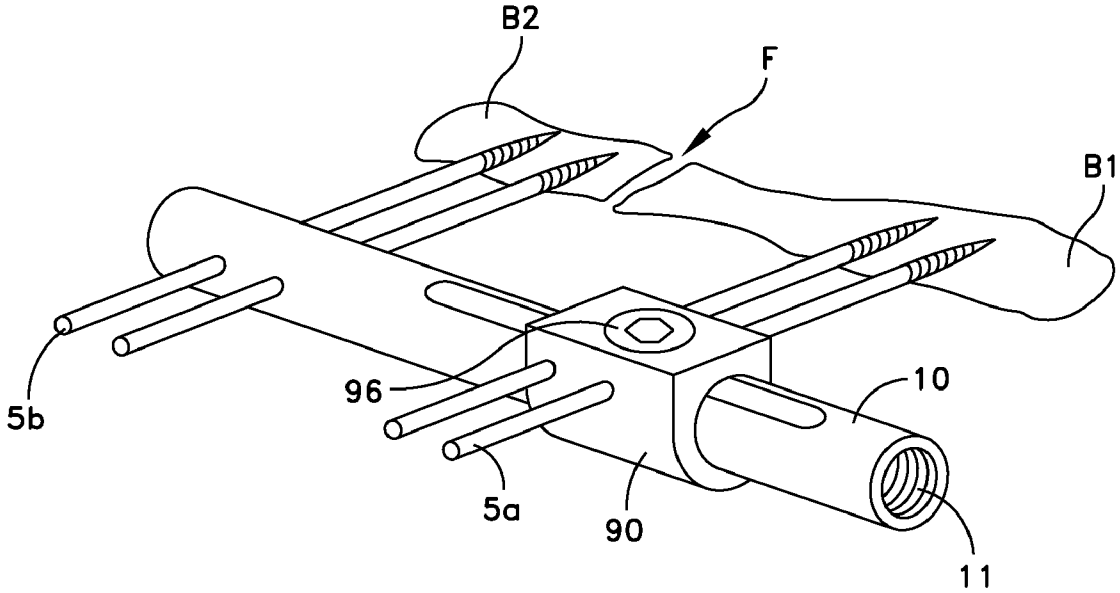

FIG. 19A

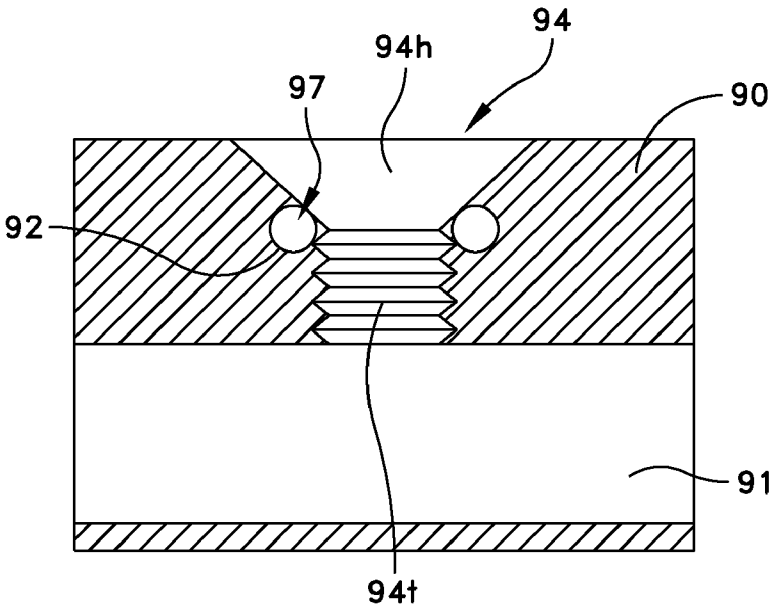

FIG. 19B

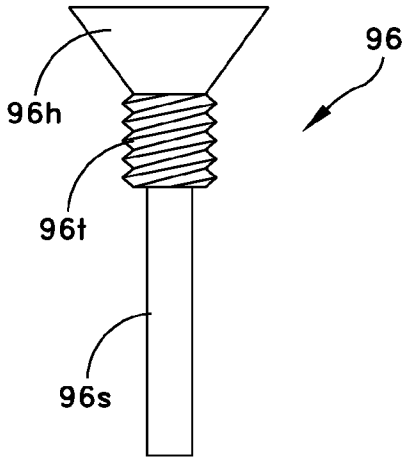

FIG. 19C

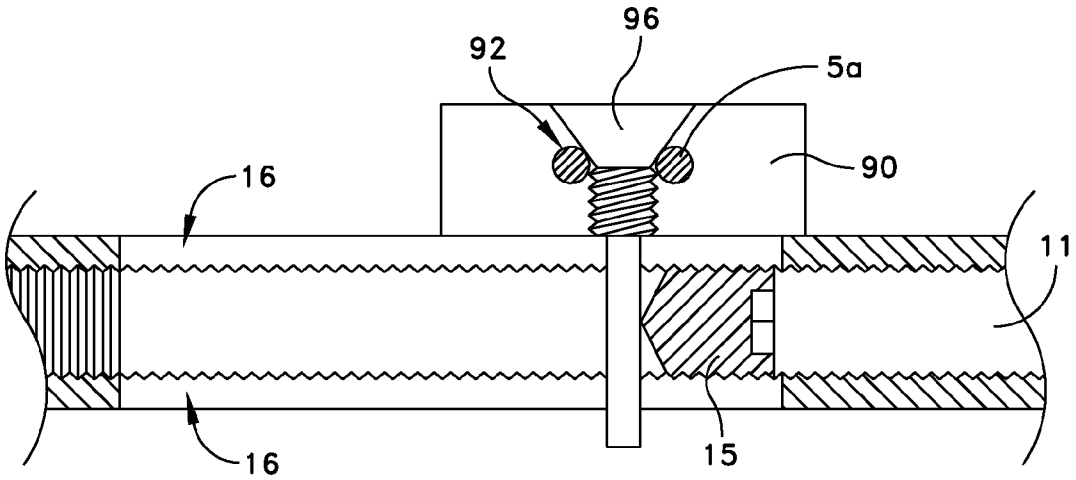

FIG. 19D

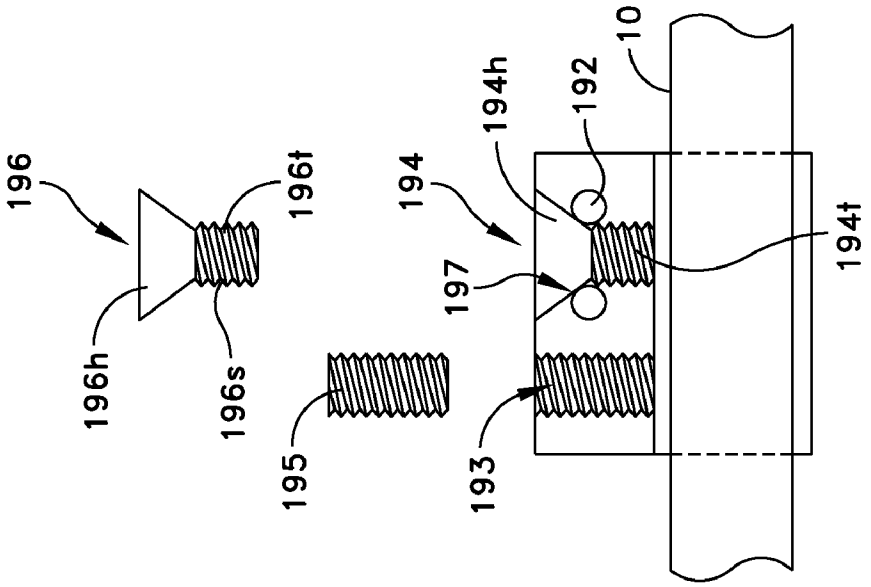

FIG. 20C

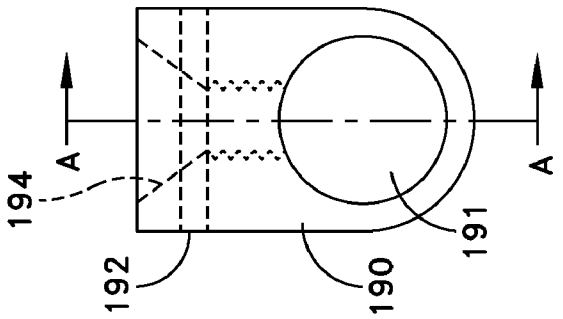

FIG. 20B

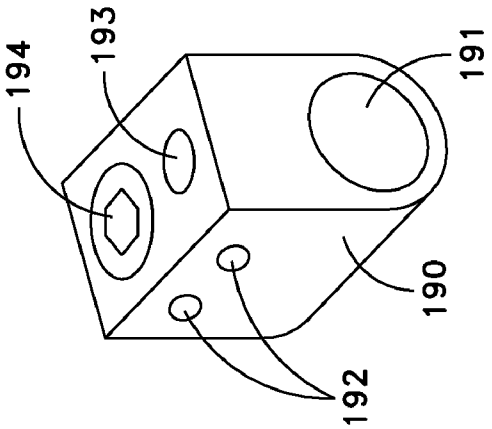

FIG. 20A

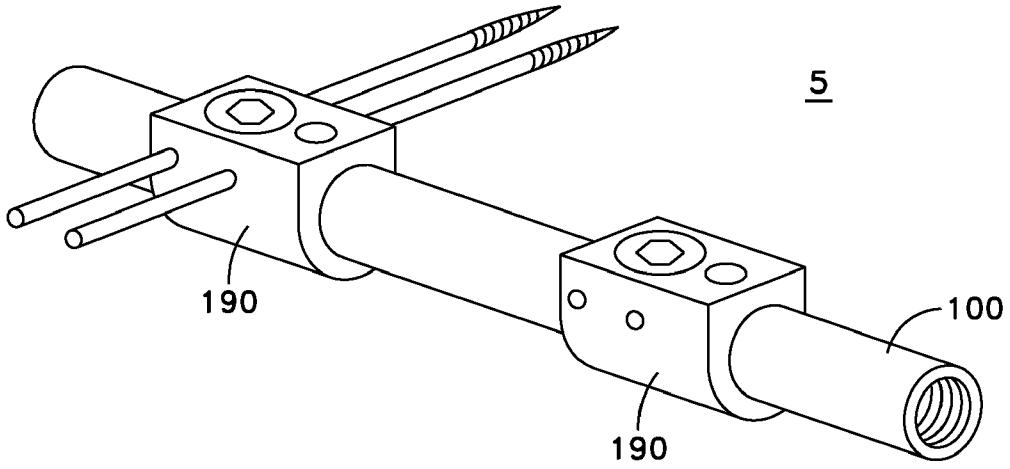

FIG. 21

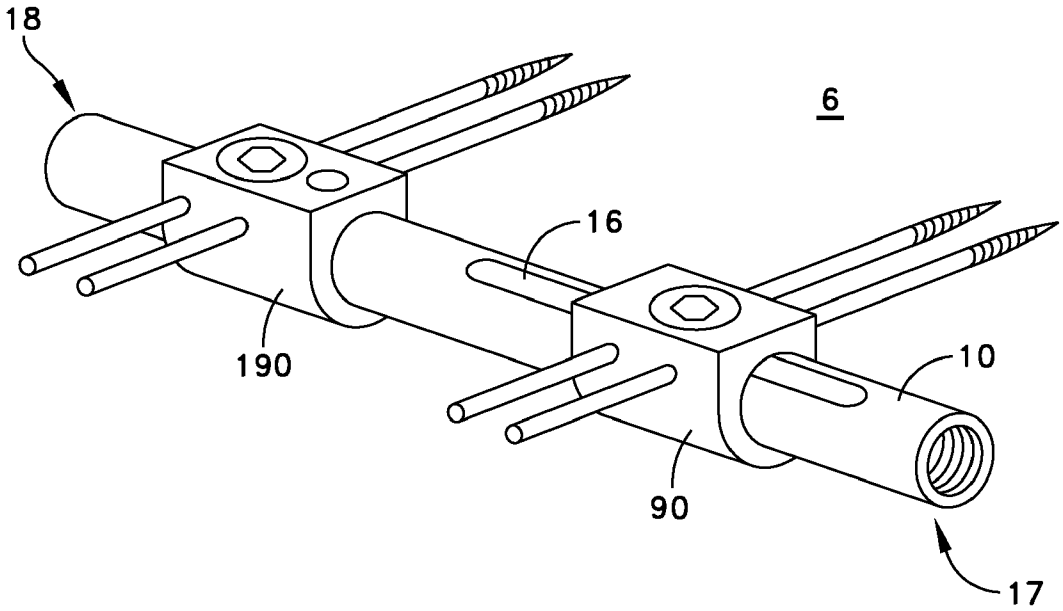

FIG. 22

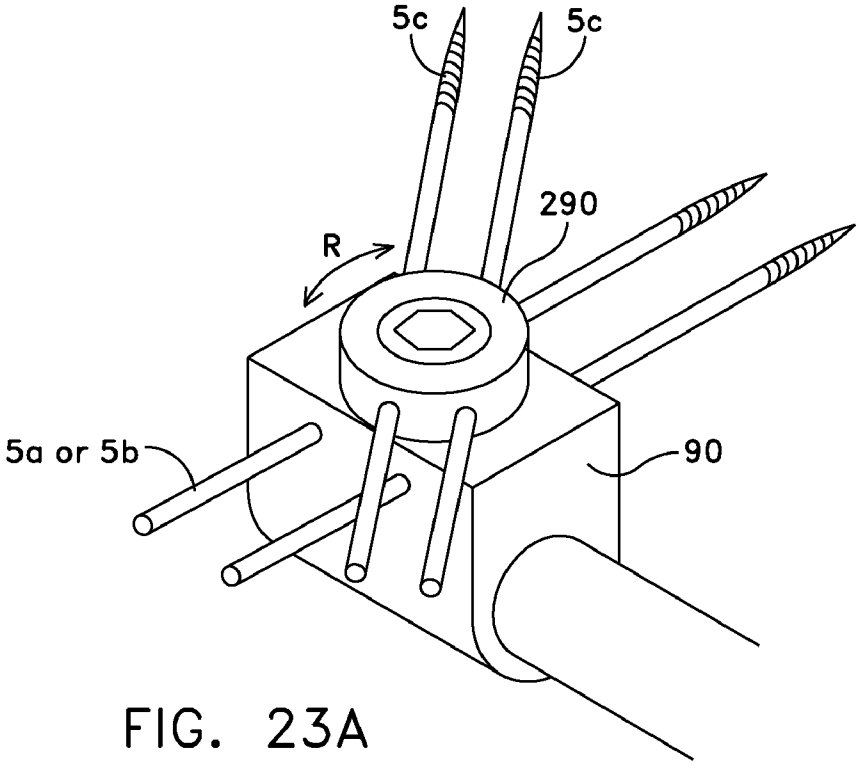

FIG. 23A

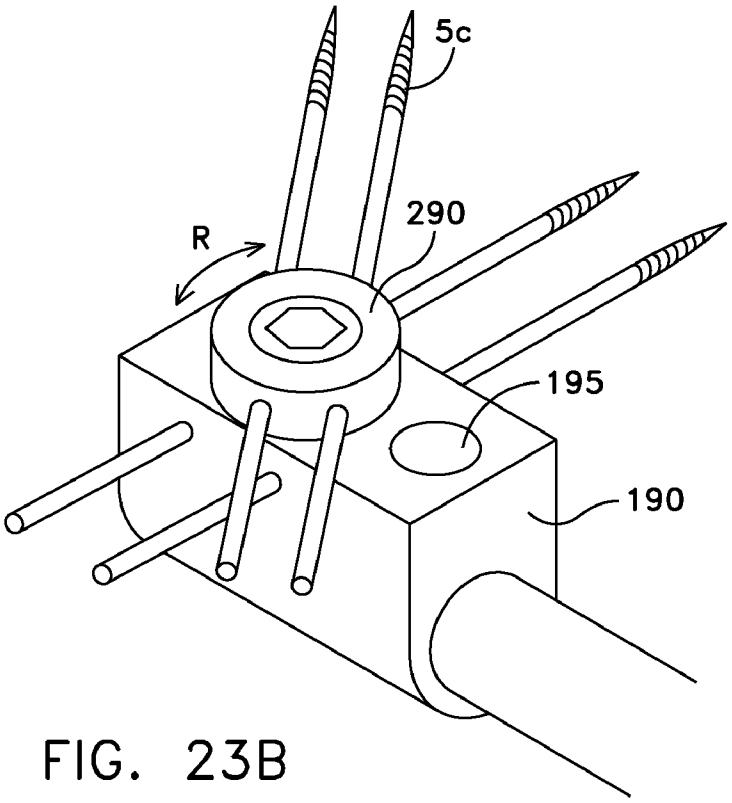

FIG. 23B

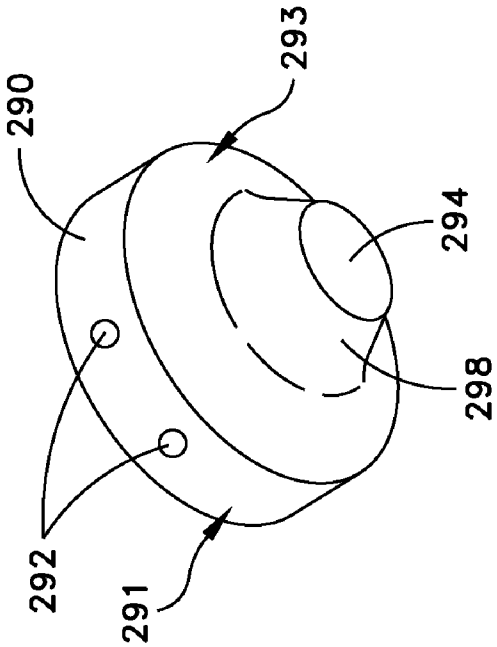

FIG. 23D

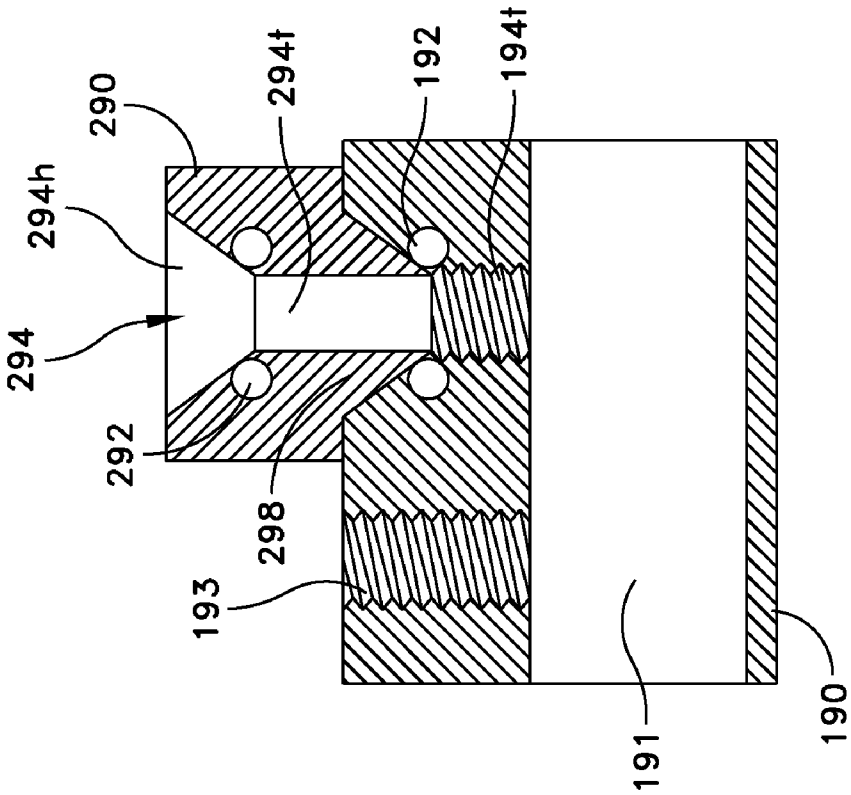

FIG. 23C

ORTHOPEDIC DEVICE

CROSS-REFERENCE TO RELATED APPLICATION

[0001] This application claims the benefit under 35 U.S.C. § 119(e) of U.S. Provisional Application Ser. No. 60/984,012, filed Oct. 31, 2007, and U.S. Provisional Application Ser. No. 61/096,358, filed Sep. 12, 2008. The disclosures of the foregoing applications are incorporated herein in their entirety.

FIELD OF THE INVENTION

[0002] The present disclosure relates to the field of orthopedics and more particularly to an external orthopedic device for providing fixation, reduction, or distraction of bone segments.

BACKGROUND

[0003] External orthopedic devices are used in many orthopedic treatments to fixate, distract, or reduce bone segments. Generally, fixation devices or fixators are used to stabilize bone pieces and to facilitate the healing of bones at a bone repair site. Such fixators can be used by orthopedic surgeons to restore the patient's anatomy at a fracture following an injury or distract an osteotomy site in bone lengthening procedures. Reduction and distraction devices are used to gradually adjust the relative orientation and spacing of the bone parts on opposing sides of a bone repair site. Because these external devices are attached externally to the patient's body for the duration of the treatment, which can last from several weeks to many months, the bulkiness of the external fixator devices are important features in the market acceptance of any particular design.

[0004] Thus, there is a continuing need for an improved external fixator that is adaptable to a variety of configurations while maintaining a low profile for physical compactness.

SUMMARY

[0005] According to an embodiment, an external fixator device for fixating bone parts is disclosed. Such device can be used in treating bone fractures or osteotomies. In treating bone fractures, the device can be used to hold the bone pieces in place. The device can be used for compression or distraction of the bone parts.

[0006] According to an embodiment, an orthopedic device for fixating bone parts includes a set of one or more bone fixation pins suitable for engaging a bone piece, an elongated fixator body having an internally threaded bore extending longitudinally therethrough, a pair of opposed longitudinally extending slots in the fixator body, and a pin-holder received within the fixator body and configured to removably hold the set of one or more bone fixation pins, the pin-holder longitudinally movable within the fixator body for controlling the position of the set of bone fixation pins within the fixator body. The orthopedic device can have the fixator body configured to removably hold a second set of one or more bone fixation pins at a location fixed along the fixator body.

[0007] According to another embodiment, an orthopedic device for fixating bone parts comprises a set of one or more bone fixation pins suitable for engaging a bone piece, a fixator body having an internally threaded bore extending longitudinally therethrough, a first pair of opposed longitudinally extending slots in the fixator body, and a pin-holder received within the internally threaded bore of the fixator body and configured to removably hold the set of one or more bone fixation pins extending through the pair of opposed longitudinally extending slots. The pin-holder is longitudinally movable within the fixator body for controlling the position of the set of bone fixation pins within the fixator body.

[0008] According to another embodiment, an orthopedic device for fixating bone parts comprises two sets of one or more bone fixation pins suitable for engaging a bone piece, a fixator body having a first part and a second part, and the first and second parts being connected by a joint. The joint can comprise a universal joint or double-jointed with two universal joints. Each of the first and second parts has an internally threaded bore extending longitudinally therethrough and a first pair of opposed longitudinally extending slots in the first part of the fixator body. A first pin-holder is received within the internally threaded bore of the first part and configured to removably hold the first set of one or more bone fixation pins extending through the first pair of opposed longitudinally extending slots. The pin-holder is longitudinally movable within the first part for controlling the position of the set of bone fixation pins within the first part. A second pair of opposed longitudinally extending slots are provided in the second part of the fixator body. A second pin-holder is received within the internally threaded bore of the second part and configured to removably hold the second set of one or more bone fixation pins extending through the second pair of opposed longitudinally extending slots, the pin-holder longitudinally movable within the second part.

[0009] According to another embodiment, a method of fixating two bones relative to one another is disclosed. The method comprises percutaneously placing a first fixation pin into a first bone piece, placing an external fixator over the first fixation pin by having the fixation pin go through a pin hole provided at one end of the external fixator's elongated body, wherein the elongated body has two ends and an internally threaded bore extending longitudinally therethrough. The elongated body's second end is then positioned over a second bone piece. A pin-holder configured to move longitudinally within the internally threaded bore and removably hold one or more fixation pins, is positioned along the length of the elongated body at a desired location over the second bone piece. Next, a second fixation pin is inserted through a pin hole provided in the pin-holder and into the second bone piece. Then, the second fixation pin is locked by tightening a set screw provided in the pin-holder are toxic. The first fixation pin is locked by tightening a locking set screw provided within and threadably engaging the internally threaded bore of the elongated body.

BRIEF DESCRIPTION OF THE DRAWINGS

[0010] FIG. **1**A is an illustration showing a perspective view of an external fixator according to another embodiment.

[0011] FIG. **1**B is a plan view of the external fixator of FIG. **1**A.

[0012] FIG. **1**C is a cross-sectional view of the fixator of FIG. **1**B taken through line B-B.

[0013] FIG. **1**D is an opposite side plan view of the view shown in FIG. **1**B.

[0014] FIG. **1**E is a cross-sectional view of the fixator of FIG. **1**D taken through line A-A.

[0015] FIG. **2**A is a plan view of an embodiment of a pin holder assembly.

[0016] FIG. **2**B is a cross-sectional view of the pin holder assembly of FIG. **2**A taken through line A-A shown in FIG. **2**A.

[0017] FIG. **3**A is a plan view of an external fixator according to another embodiment.

[0018] FIG. **3**B is a sectional view of the universal joint of the external fixator of FIG. **3**A taken through line A-A shown in FIG. **3**A.

[0019] FIG. **3**C is a plan view of an external fixator according to another embodiment.

[0020] FIGS. **3**D and **3**E are longitudinal sectional views taken through line B-B shown in FIG. **3**D illustration two embodiments of a portion of the external fixator of FIG. **3**C.

[0021] FIGS. **4**A-**4**C illustrate a hand tool set for use with the external fixator of this disclosure.

[0022] FIGS. **5**A-**5**H illustrate a method of using an embodiment of the fixator of this disclosure to fixate two bones in a foot.

[0023] FIGS. **6**A and **6**B illustrate an application of the fixator of this disclosure in a spine.

[0024] FIGS. **7**A-**7**C illustrate an application of the fixator of this disclosure in various long bone applications.

[0025] FIGS. **8**A and **8**B are perspective views of a fixator according to another embodiment.

[0026] FIGS. **9**A-**9**H are various additional views of the fixator of FIGS. **8**A and **8**B.

[0027] FIGS. **10**A and **10**B are perspective views of a fixator according to another embodiment.

[0028] FIGS. **10**C-**10**F are various additional views of the fixator of FIGS. **8**A and **8**B.

[0029] FIGS. **11**A and **11**B are perspective views of a fixator according to another embodiment.

[0030] FIGS. **11**C-**11**F are various additional views of the fixator of FIGS. **8**A and **8**B.

[0031] FIGS. **12**A-**12**F are various views of another universally flexible joint according to another embodiment.

[0032] FIG. **13**A is an illustration of an external fixator according to an embodiment.

[0033] FIG. **13**B is an illustration of an external fixator according to another embodiment.

[0034] FIG. **13**C is an illustration of another embodiment of external fixator.

[0035] FIG. **14**A is an illustration of the fixator body of the external fixator of FIG. **13**A.

[0036] FIG. **14**B is an illustration of the slidable sleeve for the fixator of FIG. **13**A.

[0037] FIG. **14**C is a lateral cross-sectional view of the fixator of FIG. **13**A.

[0038] FIG. **14**D is a longitudinal cross-sectional view of the fixator of FIG. **13**A.

[0039] FIG. **14**E is another longitudinal cross-sectional view of the fixator of FIG. **13**A.

[0040] FIG. **15**A is a perspective view of a pin locking cap.

[0041] FIG. **15**B is a partial sectional illustration of the pin locking cap of FIG. **15**A in an assembled configuration in an unlocked position.

[0042] FIGS. **15**C and **15**D are illustrations showing how the spring-loaded pin locking cap **30** locks bone fixation pins.

[0043] FIG. **16** is an illustration of an external fixator according to another embodiment.

[0044] FIG. **17**A is a detailed illustration of another embodiment of a driving set screw and the associated fixation pin holder.

[0045] FIG. **17**B is a cross-sectional view of the driving set screw of FIG. **17**A.

[0046] FIG. **17**C is a longitudinal cross-sectional view of the fully assembled driving set screw of FIG. **17**A.

[0047] FIG. **17**D is an illustration of a cam component of the external fixator of FIG. **16**.

[0048] FIG. **17**E is an end view of the cam of FIG. **17**D.

[0049] FIG. **18**A is an illustration of another embodiment of a slidable sleeve that can be used in conjunction with the driving set screw of FIG. **17**A.

[0050] FIG. **18**B is an illustration of an external fixator utilizing the slidable sleeve of FIG. **17**A.

[0051] FIG. **19**A is an illustration of a slidable sleeve according to another embodiment.

[0052] FIG. **19**B is a longitudinal cross-sectional illustration of the slidable sleeve of FIG. **19**A.

[0053] FIG. **19**C is an illustration of a countersink-head screw used in conjunction with the slidable sleeve of FIG. **19**A.

[0054] FIG. **19**D is a cross-sectional illustration of a fixator body utilizing the slidable sleeve of FIG. **19**A.

[0055] FIG. **20**A is an illustration of an offset pin clamp.

[0056] FIG. **20**B is an end view of the offset pin clamp of FIG. **20**A.

[0057] FIG. **20**C is a longitudinal cross-section of the offset pin clamp of FIGS. **20**A and **20**B taken through the line A-A.

[0058] FIG. **21** is an illustration of an external fixator according to another embodiment.

[0059] FIG. **22** is an illustration of an external fixator according to another embodiment.

[0060] FIG. **23**A is an illustration of the slidable sleeve of FIG. **19**A in combination with a rotatable pin clamp attachment.

[0061] FIG. **23**B is an illustration of the offset pin clamp of FIG. **20**A in combination with a rotatable pin clamp attachment.

[0062] FIG. **23**C is a longitudinal cross-sectional illustration of the assembly of FIG. **23**B.

[0063] FIG. **23**D is a detailed illustration of the rotatable pin clamp attachment.

[0064] The features shown in the above referenced drawings are illustrated schematically and are not intended to be drawn to scale nor are they intended to be shown in precise positional relationship. Like reference numbers indicate like elements.

DETAILED DESCRIPTION

[0065] In the following detailed description of the preferred embodiments, reference is made to the accompanying drawings which form a part hereof, and in which are shown by way of illustration specific embodiments in which the invention may be practiced. It is to be understood that other embodiments may be utilized and structural changes may be made without departing from the scope of the present invention.

[0066] Referring to FIGS. **1**A-**1**E, an external fixator device **5** according to a preferred embodiment will be described. The external fixator device **5** includes a fixator body **110** having an internally threaded bore **111** extending longitudinally through the length of the fixator body **110**. A pin-holder **143** is received in one end of the fixator body **110** and threadably engages the internally threaded bore **111** enabling the pin-holder **143** to move longitudinally inside the fixator body. The pin-holder **143** is provided with one or more pin holes **142** extending laterally through the pin-holder **143** for receiving a

set of one or more bone fixation pins **5***a*. The lateral orientation of the pin holes **142** refer to the fact that the pin holes **142** extend through the pin-holder **143** generally sideways with respect to the longitudinal axis of the fixator body. The pin holes **142** can be oriented perpendicular to the longitudinal axis of the fixator body or at any desired angle. The fixator body can have cylindrical shape as shown in the illustrated example but the fixator body can have any appropriate shape.

[0067] As shown in FIG. **1**A, two pairs of diametrically opposed longitudinally extending slots **116** and **126** are provided in the fixator body **110**. The first pair of longitudinally extending slots **116** and the pin holes **142** provided in the pin-holder **143** allows one or more first set of fixation pins **5***a* (shown in phantom lines) to be removably received in the pin holes **142** and pass through the fixator body **110**. The illustrated example is shown with two fixation pins **5***a* but the pin-holder **143** can be configured to accommodate as many fixation pins **5***a* as appropriate. The slots **116** allow the pin-holder **143** to be moved longitudinally within the fixator body **110** while holding the first set of fixation pins **5***a*. A guide pin **160** is provided in the pin-holder **143** to keep the pin-holder from rotating and keep the pin holes **142** aligned with the slots **116**. The example of a guide pin **160** shown in FIG. **1**A is a cylindrical pin but the pin is not limited to that shape and can be provided in any shape as long as it functions substantially the same way. The guide pin **160**, for example, can have a square or hexagonal cross-sectional shape.

[0068] Referring to the cross-sectional views shown in FIGS. **1**C and **1**E, the pin-holder **143** threadably engages the internally threaded bore **111** by means of a threaded driving screw **155**. The driving screw **155** rotatably engages the pin-holder **143** and as the head portion is threaded in or out of the fixator body **110**, it pushes or pulls the pin-holder **143** longitudinally within the bore **111**.

[0069] The pin-holder assembly is inserted into the internally threaded bore **111** with the pin-holder **143** end first so that the threaded driving screw **155** is near the first end **117** of the fixator body **110** as shown in FIG. **1**C. The driving screw **155** threadably engages the internally threaded bore **111** and operates on the pin-holder **143** to move the pin-holder **143** back and forth within the bore **111** in longitudinal direction. To enable this, the driving screw **155** and the pin-holder **143** are rotatably and axially coupled so that the threaded driving screw **155** can be rotated axially with respect to the pin-holder **143** while the pin-holder **143** is holding the fixation pins **5***a*. The driving screw **155** is provided with a socket **157** at the end opposite from the end rotatably coupled to the pin holder **143**. The socket **157** is appropriately shaped to receive a tool for turning the driving screw **155**.

[0070] The rotatable axial coupling between the driving screw **155** and the pin-holder **143** can be achieved in a variety of ways. In one embodiment, this rotatable axial coupling is achieved by the exemplary structures shown in FIG. **1**C. In this example, the pin-holder **143** has a center stem **145** that extends into the threaded driving screw **155**. The center stem **145** has a flared head portion **146** having a larger diameter than the center stem **145**. The center stem **145** including the head portion **146** is received in a recess of the driving screw **155** defined by a longitudinally extending flange **159**. The flared head portion **146** interferes with a portion of the flange **159** so that the pin-holder **143** and the driving screw **155** are secured together in longitudinal direction while allowing the pieces to rotate with respect to each other.

[0071] The flange **159** extends partially along the periphery of the driving screw **155** leaving an opening so that the driving screw **155** and the pin-holder **143** can be assembled by sliding the center stem **145** through the opening into the recess. As mentioned earlier, however, the rotatable coupling structure between the pin-holder **143** and the driving screw **155** is not limited to the configuration discussed. For example, the coupling structure shown in FIG. **1**C can be reversed so that the center stem **145** is provided on the driving screw **155** and the longitudinally extending flange **159** is provided on the pin-holder **143**. Furthermore, the head portion **146** of the center stem **145** can have a spherical shape rather than the flat shape illustrated in FIGS. **1**C and **1**E.

[0072] As shown in FIG. **1**C, set screws **186** are provided in the pin-holder **143** for locking the first set of fixation pins **5***a* in their corresponding pin holes **142**. The pin-holder **143** is provided with at least one threaded bore **184** for each pin hole **142** for receiving a set screw **186**. Each of the set screws **186** threads into the threaded bore **184** corresponding to a pin hole **142** and secures a bone fixation pin that is received in the pin hole **142** by impinging against the bone fixation pin.

[0073] In the illustrated example, the threaded bores **184** are aligned with the second set of slots **126** so that the set screws **186** are accessible through the slots **126** for tightening or loosening. According to an aspect of the invention, the threaded bores **184** can extend completely through the opposite side of the pin-holder **143** so that set screws **186** can be threaded in to the pin-holder **143** from either side through either one of the second set of slots **126**. According to another aspect of the invention, some of the pin holes **142** in the pin-holder **143** can be oriented to align with the first set of slots **116** and other pin holes **142** can be oriented to align with the second set of slots **126**. The pin-holder **143** can be provided with one or more pin holes **142**, the specific number depending on the maximum number of fixation pins **5***a* the particular fixator device requires.

[0074] FIGS. **2**A and **2**B shows a pin-holder **243** according to another embodiment. The pin-holder **243** is also configured to rotatably couple to a driving screw **155**. Similar to the pin-holder **143**, the pin-holder **243** is also configured with a center stem **145** that is received into the recess in the driving screw **155** formed by the longitudinally extending flange **159**. The center stem **145** of the pin-holder **243** has a flared head portion **146** that interferes with a portion of the flange **159** when they are coupled so that the pin-holder **243** and the driving screw **155** are secured together in longitudinal direction while they can rotate with respect to each other. As discussed above, this coupling structure is only one example and other suitable coupling structure can be used.

[0075] As shown in FIGS. **2**A and **2**B, the flange **159** extends partially along the periphery of the driving screw **155** leaving an opening **158** so that the driving screw **155** and the pin-holder **243** can be assembled by sliding the center stem **145** through the opening **158** into the recess.

[0076] The pin-holder **243** illustrates an embodiment wherein the relative positions of the pin holes **142** and the guide pin **160** are different from those of the pin-holder **143**. In the pin-holder **243**, one or more pin holes **142** are positioned on one side of the guide pin **160** so that the pin holes **142** can be positioned closer together. The positions of the threaded bores **184** for the set screws **286** are aligned with the pin holes so that the set screws **286** can lock the first set of fixation pins **5***a* received in the pin holes **142**. In this embodiment, the threaded bores **184** extend completely through the

pin-holder **243** and actually only one end **184***a* of a bore **184** is threaded to threadably engage the set screws **286**. The set screws **286** are inserted into their respective bore **184** from the non-threaded end. The set screws **286** are provided with a socket **287** at one end appropriately shaped for receiving a tool for turning the set screws. Thus, the socket end **287** extends out as shown in FIG. **2**B. The opposite end, the end that will be urged against a fixation pin received in the pin hole **142**, of the set screws **286** have a flared portion **286***a* whose diameter is larger than the diameter of the threaded portion **184***a* of the bore **184** functioning as a stop and prevents the set screws **286** from being completely removed through the threaded end **184***a*. This feature allows the end user to loosen or unscrewing the set screws **286** without worrying about the set screws **286** falling out of the pin-holder **243** while unscrewing.

[0077] The fixator body **110** may be provided with at least one pair of opposed pin holes **112***a* and **12***b* near the fixator body's second end **118** for receiving one or more second set of fixation pins **5***b* (shown in phantom lines in FIG. **1**A) through the fixator body. Similar to the pin holes **12** provided in the embodiment of FIG. **13**A, for example, a pair of opposed pin holes **112** are provided for each of the fixation pins **5***b*. The pin holes for receiving the second set of fixation pins **5***b* can be diametrically (with respect to the diameter of the fixator body **110**) opposed like the pin holes **112***a* and **112***b* or they can be off-set from the diameter of the fixator body **110** like the pair of pin holes **112***c* and **112***d* shown in FIGS. **1**A and **1**B. Regardless, the fixator body **110** can be provided with as many sets of such pin holes as many second set of fixation pins **5***b* are necessary. Furthermore, the pin holes **112***a*, **112***b*, **112***c* and **112***d* can be positioned so that the second set of fixation pins **5***b* can be at any desired angle with respect to the longitudinal axis of the fixator body **110**.

[0078] At the second end **118** of the fixator body **110**, a locking set screw **125** is received in and threadably engages the internally threaded bore **111** of the fixator body for locking the second fixation pins **5***b*. The manner in which the second fixation pins **5***b* cooperates with the rest of the external fixator device **5** is similar to that described in connection with the embodiment of the external fixator device **1** described above. The locking set screw **125** is provided with a socket **127** appropriately shaped to receive a tool for turning the set screw **125**.

[0079] FIG. **3**A shows another embodiment of the external fixator **5** of FIGS. **1**A-**1**E. In this embodiment, the fixator body **110** is configured with a universal joint **500** between two portions **110**A and **110**B of the fixator body **110**. The universal joint allows the two portions **110**A and **110**B of the fixator body to be set at any desired angle, which in turn allows the fixation pins held in each of the two portions **110**A and **110**B of the external fixator. The universal joint is formed by hinge legs **502** and **504** of the two portions **110**A and **110**B, respectively, joined by a double-axle **505**, which is a typical universal joint construction. The double-axle **505** can be configured to allow locking of the universal joint at a desired angle. FIG. **3**B, a cross-section of the universal joint taken through the line A-A shown in FIG. **3**A, shows that the double-axle **505** can include a locking screw **507***a* and **507***b* for each of the two axes of the universal joint. The locking screws **507***a* and **507***b* threads into the main body of the double-axle **505** and locks the universal joint **505** in each of the two axes by compressing the respective hinge legs **504** and **502**.

[0080] FIG. **3**C shows another embodiment wherein the second portion **110**B of the fixator body is configured to freely rotate axially with respect to the universal joint body **520**. FIG. **3**D, which is a longitudinal sectional view of the second portion **110**B of the fixator body taken through the line B-B of FIG. **3**C, shows an example of that structure that allows the free axial rotation of the second portion **110**B. One end of the universal joint body **520** is received within the threaded bore **111**B of the second portion **110**B. The universal joint body **520** and the second portion **110**B have flanges **522** and **122**, respectively, which interfere with one another to keep the universal joint body **520** from being pulled out of the second portion **110**B when the fixator **5** is used in distraction mode. On the other hand, a retaining pin **166** inserted across the second portion **110**B prevents the universal joint body **520** from being pushed into the second portion **110**B when the fixator **5** is used in compression mode. FIG. **3**E shows an embodiment where a set screw **132** for locking the free-spinning universal joint body **520** is provided in the second portion **110**B of the fixator body. The set screw **132** threadably engages the second portion **110**B and advances inward urging against the flange portion **522** of the universal joint body **520** to lock the universal joint body **520**.

[0081] FIG. **4**A shows a hand tool set **600** that can be provided along with the external fixator device of this disclosure. The hand tool set **600** includes a screwdriver **610** and an adaptor **650**. The screwdriver **610** is for the user of the external fixator device such as a surgeon to tighten or loosen the various set screws that are used in the external fixator device. The driver includes a handle portion **612** and a driving tip **615** (i.e. the part that engages the set screws). The driving tip **615** is configured and adapted appropriately for engaging the set screw. For example, the driving tip **615** is shown in FIG. **4**B with a square tip **616** for driving a Robertson-type screw heads. This example of a screwdriver **610** is double-tipped and includes a second driving tip **617** which is a smaller square tip. Thus, the user can use this one screwdriver **610** for driving two different size screw heads.

[0082] In the external fixator embodiment of FIGS. **1**A-**1**C, for example, the screwdriver **610** can be appropriately configured and adapted to engage the sockets of the set screws **125**, **155**, and **186**. As discussed above, the set screws can have any one of the variety of driver socket shapes and the screwdriver **610** would be configured with an appropriately matching driving tip **615**.

[0083] As an example, FIG. **4**B shows another embodiment of the screw driver **610'** having a driving tip **615** configured as a double-hex tip. The driving tip **615** is configured with two different size hex driving tips **616'** and **617'**.

[0084] The adaptor **650** is configured to be used for driving bone fixation pins into a bone piece and for removing the bone fixation pins. The adaptor **650** is provided with a screwdriver connector end **652** at one end and a bone fixation pin engaging end **655** at the other end. The fixation pin engaging end **655** is provided with a socket appropriately shaped to receive the distal end of a bone fixation pin. If the distal end of the bone fixation pin has a square shaped tip, as many fixation pins do, the fixation pin engaging end **655** will be provided with a square shaped socket.

[0085] The screwdriver connector end **652** is configured and adapted appropriately for engaging a particular screw driver or a power driver that may be used to drive or remove the bone fixation pins. In the example shown in FIG. **4**A, the screwdriver connector end **652** is provided with a square-

shaped socket **657** for receiving the square-shaped screwdriver tip **617**. FIG. **4**C shows a bone fixation pin **700** engaged with the adaptor **650** and the adaptor **650** in turn being driven by the screwdriver **610**.

[0086] According to another embodiment, the screwdriver connector end **652** of the adaptor **650** is configured to be engaged to a power screwdriver's chuck. In the example shown in FIG. **4**A, the screwdriver connector end **652** is provided with a flat surface **658** that is required for engaging with a particular type of power screwdriver chuck that is in use in the industry.

[0087] The adaptor can also be provided with a hole **654** for receiving the screw driver **610** as shown in FIG. **4**A to provide more leverage when the bone fixation pins are manually being driven. This arrangement provides more torque than the arrangement shown in FIG. **4**C.

[0088] A method of using an embodiment of the external fixator device to fixate two bones in a foot will be described as an example of methods for using the external fixator of this disclosure. Referring to FIG. **5**A, the threaded end of a first fixation pin **701** is placed freehand perpendicular to the long axis of the bone **801**. FIGS. **5**A-**5**H are illustrated using a skeletal model of a foot but in actual use the fixation pins will be driven into the bone percutaneously. The fixation pin diameter should not exceed ⅓ of the bone diameter. Referring to FIG. **5**B, the external fixator **5** of FIGS. **1**A-**1**E is placed over the first fixation pin **701** (the fixation pin going through one of the pin hole **112***a*) and aligned so that the distally located pin-holder **143** of the fixator **5** is positioned over the second bone **802**. The pin-holder **143** should be adjusted along the length of the fixator **5** to position the pin holes **142** (see FIG. **1**C for the pin holes **142** in the pin-holder **143**) in the desired location.

[0089] Referring to FIG. **5**C, a second fixation pin **702** is inserted through one of the pin holes **142** and into the second bone **802**. During this step, the pin-holder **143** functions as a guide for threading the second fixation pin **702** into the second bone **802**. At this point, fluoroscopy can be used to check penetration of the pins **701** and **702** through the far cortex of the bone. Pins should not penetrate more than 2 mm beyond the far cortex of bone.

[0090] Referring to FIG. **5**D, a third and fourth fixation pins **703** and **704** are inserted through the fixator **5** in the same manner as the first two fixation pins and threaded into the first and second bone pieces **801** and **801**, respectively. The screw driver adaptor **650** of FIG. **4**A can be used to connect to the pins to assist with the insertion. As discussed above in connection with FIGS. **4**A-**4**C, a screw driver **610** can be connected to the screwdriver connector end **652** of the adaptor **650** to manually advance the fixation pins into the bone. If more torque is required, the screw driver **610** can be inserted through the hole **654** as shown in FIG. **5**E to advance the fixation pins.

[0091] The fixator **5** provides at least two sets of pin holes **112***a* and **112***c* at the proximal end **118** so that the proximal pins **701**, **703** can be positioned in either a vertical or horizontal configuration. Adequate clearance should be left between the fixator **5** and the patient's skin to allow for post-operative swelling.

[0092] Referring to FIG. **5**F, the distal pins **702**, **704** are locked by tightening the set screws **186** of the pin-holder **143** located within and accessible through the fixator's slot **126**. Referring to FIG. **5**G, the proximal fixation pins **701**, **703** are locked by tightening the locking set screw **125** located in the threaded bore of the fixator **5** in the proximal end **118** of the fixator **5**. Referring to FIG. **5**H, compression or distraction can be obtained by turning the driving screw **155** of the pin-holder **143** located within the threaded bore of the fixator **5** accessible from the distal end **117** of the fixator. For compression, the driving screw **155** is turned in the direction that will move the pin-holder **143**, and thus the distal fixation pins **702**, **704**, towards the proximal pins **701**, **703**. The direction of the turn will depend on the thread direction of the threaded bore of the fixator **5**. For distraction, the driving screw **155** is turned in the opposite direction moving the pin-holder **143**, and thus the distal fixation pins **702**, **704**, away from the proximal fixation pins **701**, **703**. For bone lengthening with a callotasis technique, for example, the distraction can be divided into ¼ turn increments where the threads on the internal bore of the fixator **5** is configured so that one full turn of the screwdriver will result in 1 mm of distraction. After the fixator **5** is applied, the protruding ends **777** of the fixation pins should be cut short and capped with pin covers (not shown) or if possible, the fixator pin-holder **143** can be temporarily loosened so that the fixator **5** can be moved slightly away from the body to cover the cut ends of the fixation pins. Perform a final check of all fixator components to ensure that they are tightened before completing the surgery.

[0093] The various embodiments of the external fixator device described herein can be used in treating other bones. For example, FIGS. **6**A and **6**B shows a fixator device such as the embodiment **5** of FIGS. **1**A-**1**E, being used in a spine application. FIGS. **6**A and **6**B show two such fixator devices **5** percutaneously attached to two vertebrae **901** and **902**. The fixators **5** can be used to fuse or decompress the vertebra **901**, **902**. FIGS. **7**A-**7**C show more examples where the fixator devices **5** are used in fixating or lengthening of various long bones. FIG. **7**A shows the fixators **5** attached to an ulna **903** and a radius **904**. FIG. **7**B shows the fixators **5** attached to a femur **905** and a tibia **906**. FIG. **7**C shows the fixator **5** attached to a humerus **907**.

[0094] FIGS. **8**A, **8**B, and **9**A-**9**D show an external fixator **1000** that is another embodiment of the external fixator **5** of FIG. **3**A. The external fixator **1000** includes a first portion **1010**A and a second portion **1010**B that are linked by a universal joint **1500**. Similar to the universal joint **500** in the external fixator **5** of FIG. **3**A, the universal joint **1500** allows the two portions **1010**A and **1010**B of the fixator body to be set at any desired angle, which in turn allows the fixation pins held in each of the two portions **1010**A and **1010**B of the fixator body to be arranged into a variety of angular configurations. Similar to the external fixator **5**, a set of fixation pins can be held in the first portion **1010**A of the external fixator **1000** through the pin holes **142** in the pin-holder **143** and another set of fixation pins can be held in the second portion **1010**B of the external fixator **1000** through the pin holes **112***a*, **112***b*, **112***c* and **112***d*.

[0095] The universal joint **1500** is formed by hinge legs **1502***a* and **1502***b* of the first portion **1010**A and **1504***a* and **1504***b* of the second portion **1010**B, joined by a double-axle **1505**. The universal joint **1500** can be locked by the hinge locking screws **1507***a* and **1507***b* are provided to lock the universal joint **1500** and lock the angular relationship between the first and second portions **1010**A and **1010**B.

[0096] In one embodiment, the locking function of the hinge locking screws **1507***a* and **1507***b* can be enhanced by providing diamond teeth surface finish (e.g. knurled surface finish) either on the interior surface of the hinge legs **1502***a*

and **1502***b* or the surfaces on the double-axle **1505** that come in contact with one another. Such diamond teeth finish will increase the friction between the contacting surfaces when the hinge locking screws **1507***a*, **1507***b* are tightened. The first and second portions **1010**A and **1010**B of the fixator may be made from materials that are softer than the double-axle **1505** to further enhance this mechanical bite of the diamond teeth.

[0097] As shown in the cross-sectional views of FIGS. **9**A and **9**D, the double-axle **1505** of the universal joint **1500** is different from the double axle **505** of the external fixator **5** shown in FIGS. **3**A and **3**B. As shown in FIG. **9**A, the hinge locking screw **1507***a* extends from the hinge leg **1504***a* to the hinge leg **1504***b* completely through the double-axle **1505** and holds the double-axle **1505** between the pair of hinge legs **1504** of the second portion **1010**B. The hinge locking screw **1507***a* forms one of the two axle of the universal joint **1500** and allows the first and second portions **1010**A and **1010**B to be rotated about the hinge locking screw **1507***a* in the direction illustrated by the arrow K in FIG. **9**B. The double-axle **1505** can be configured to have any appropriate shape as long as it fits within the universal joint configuration between the two sets of hinge legs **1502***a*, **1502***b* and **1504***a*, **1504***b* and accommodate the hinge locking screws **1507***a*, **1507***b*.

[0098] Because the hinge locking screw **1507***a* extends completely through the second portion **1010**B, the hinge locking screw **1507***a* may be cannulated for K-wire alignment. The hinge locking screw **1507***a* shown in FIG. **9**A is provided with a cannula **1508** that extends through the entire length of the hinge locking screw **1507***a*. This allows the user to shoot a K-wire through the cannula **1508** to where the user prefers to place the hinge formed by the universal joint **1500**.

[0099] As shown in FIG. **9**A, the hinge locking screw **1507***a* is provided with threaded tip (away from its head) and threadably engages one leg of the pair of hinge legs **1504***a* and **1504***b*. In this illustrate example, the hinge locking screw **1507***a* threadably engages the hinge leg **1504***b*. Tightening the hinge locking screw **1507***a* against the hinge leg **1504***b* will close the pair of hinge legs **1504***a* and **1504***b* together against the double-axle **1505** and lock the universal joint **1500** about the axle formed by the hinge locking screw **1507***a*. This prevents the two portions **1010**A and **1010**B from rotating in the direction of the arrow K.

[0100] The second axle of the universal joint **1500** is formed by the hinge locking screw **1507***b*. However, as shown in FIG. **9**D, which is a cross-sectional view of the external fixator **1000** taken through the plane C-C in FIG. **9**C that is perpendicular to the cross-sectional view shown in FIG. **9**A, because the hinge locking screw **1507***a* extends completely through the double-axle **1505**, the hinge locking screw **1507***b* can not extend completely through the double-axle **1505**. Rather, the hinge locking screw **1507***b* threadably engages the double-axle **1505** while allowing the hinge leg **1502***b* of the first portion **1010**A to rotate about the hinge locking screw **1507***b* in the direction illustrated by the arrow H in FIG. **9**C. Tightening the hinge locking screw **1507***b* against the double-axle **1505** will lock the double-axle **1505** against the hinge leg **1502***b* and lock that hinge.

[0101] Because the hinge locking screw **1507***b* does not extend through the double-axle **1505**, the opposite side of the double-axle **1505** is rotatably attached to the hinge leg **1502***a* by a hinge pin **1507***c*. The hinge pin **1507***c* may be securely attached to the hinge leg **1502***a* and extend into the double-axle **1505**. For example, the hinge pin **1507***c* may be press-fitted into the hinge leg **1502***a* or welded to the hinge leg **1502***a*. The hinge pin **1507***c* in combination with the hinge locking screw **1507***b* comprise the second axle of the universal joint **1500**.

[0102] The first portion **1010**A of the external fixator **1000** is structurally equivalent to the first portion **110**A of the external fixator **5**. Similar to the first portion **110**A, the first portion **1010**A has an internally threaded bore **1111**A extending longitudinally through the length of the first portion **1010**A (see FIG. **9**A). A pin-holder **143**, shown and described in detail with reference to FIGS. **1**A-**1**D, **2**A, **2**B and **3**A, is received in a first end **1012** of the first portion **100**A of the external fixator **1000** and threadably engages the internally threaded bore **1111**A. This configuration enables the pin-holder **143** to move longitudinally inside the first portion **1010**A. The first and second portions **1010**A and **1010**B can have cylindrical shapes as shown in the illustrated example but they can have any appropriate shape.

[0103] The first portion **1010**A is provided with a pair of diametrically opposed longitudinally extending slots **116** that cooperate with the guide pin **160** of the pin-holder **143** to guide the longitudinal movement of the pin-holder **143** and to keep the pin holes **142** aligned with the longitudinally extending slots **116**. The first portion **1010**A of the external fixator **1000** is also provided with at least one longitudinally extending slot **126** for accommodating the set screws **186** of the pin-holder **143**. In the illustrated example, the set screws **186** thread into the pin-holder **143** in perpendicular orientation to the pin holes **142**. Thus, the longitudinally extending slot **126** is located appropriately on the first portion **1010**A to accommodate the set screws **186**. The longitudinally extending slot **126** can be provided in the first portion **1010**A as a diametrically opposed pair to allow the set screws **186** to be threaded into the pin-holder **143** from the opposite side of the external fixator **1000** if necessary.

[0104] FIG. **1**C shows how a set of fixation pins **5***a* may be held by the pin-holder **143**. Further details on how the pin-holder **143** holds fixation pins **5***a* and operate within the first portion **1010**A is provided in the texts accompanying the FIGS. **1**A-**1**D, **2**A, **2**B and **3**A.

[0105] The second portion **1010**B of the external fixator **1000** holds a set of fixation pins via the pin holes **112***a*, **112***b*, **112***c* and **112***d*, similar to the external fixator **5** of FIGS. **1**A-**1**E and **3**A. As shown in the cross-sectional views of FIGS. **9**A and **9**D, however, the second portion **1010**B is provided with a pin-locking mechanism inside its tubular structure. The pin-locking mechanism comprises a threaded driving screw **1125** and a pin-locking block **1130**. The threaded driving screw **1125** and the pin-locking block **1130** are configured to rotatably couple together similar to the way the pin-holders **143** and **243** of FIGS. **1**C and **2**A are coupled to the threaded driving screw **155**. The threaded driving screw **1125** threadably engage the internal threaded bore **1111**B of the second portion **1010**B and the driving screw **1125** moves the pin-locking block **1130** inwardly or outwardly within the second portion **1010**B by turning the driving screw. The driving screw **1125** is configured with a recess **1127** for receiving a tool (e.g. a wrench, screw driver, etc.) for turning the driving screw **1125**.

[0106] The pin-locking block **1130** is appropriately sized to fit within the internal bore of the second portion **1010**B and move longitudinally. The pin-locking block **1130** is provided with pin holes **1132** and **1133** that align with the pin holes **112***a*, **112***b*, **112***c*, and **112***d* of the second portion **1010**B. As

shown in the cross-section of FIG. **9**D, when the pin holes **1132** and **1133** are aligned with the pin holes **112***a*, **112***b*, **112***c*, and **112***d*, fixation pins can be inserted through these holes. By driving the driving screw **1125** inwardly or outwardly, the pin-locking block **1130** is pushed inwardly and urged against the fixation pins that are extending through the pin holes **1132** and **1133** of the pin-locking block **1130**. This results in the fixation pins being braced against the pin holes **112***a*, **112***b*, **112***c*, and **112***d* thus locking the fixation pins within the second portion **1010**B.

[0107] Furthermore, according to another embodiment, the second portion **1010**B of the external fixator **1000** may be provided with a lock indicator window **1020**. As shown in FIG. **9**A, the pin-locking block **1130** is provided with a lock indicator pin **1022** that is affixed into the pin-locking block **1130**. The lock indicator pin **1022** protrudes from the pin-locking block **1130** and extends into the lock indicator window **1020**. The lock indicator pin **1022** moves in longitudinal direction along with the pin-locking block **1130** and the position of the lock indicator pin **1022** within the lock indicator window **1020** indicates whether the pin-locking block **1130** is in a locked position or an unlocked position. For example, in the illustrated example, the lock indicator pin **1022** in the position shown in FIG. **9**B, positioned away from the universal joint **1500**, the pin-locking block **1130** is in an unlocked position. When the driving screw **1125** is threaded inwardly pushing the pin-locking block **1130** inward, the lock indicator pin **1022** would also slide inwardly within the lock indicator window **1020** and be closer to the universal joint **1500**. It is noted that the longitudinal motion of the pin-locking block **1130** would be limited by the length of the lock indicator window **1020** in the longitudinal direction.

[0108] FIGS. **9**F and **9**H are lateral cross-sectional views of the second portion **110**B of the external fixator **1000** taken through the planes D-D and E-E of FIG. **9**G and shows further detailed views of the pin-locking block **1130**. As shown in the cross-sections, the pin-locking block **1130** is a cylindrical structure that has two flats surfaces. The interior bore **1111**B in the region G shown in FIG. **9**E is configured with corresponding inwardly protruding portions **1015**. This configuration prevents the pin-locking block **1130** from rotating within the interior bore **1111**B and maintain the alignment between the pin holes **1132**, **1133** of the pin-locking block **1130** and the pin holes **112***a*, **112***b*, **112***c*, **112***d* of the second portion **1010**B.

[0109] FIGS. **10**A, **10**B, and **10**C-**10**F show an external fixator **2000** according to another embodiment. The external fixator **2000** includes a first portion **1010**A and a second portion **1010**C that are linked by a universal joint **1500**, similar to the universal joint **1500** in the external fixator **1000** of FIG. **8**A. The universal joint **1500** allows the two portions **1010**A and **1010**C of the fixator body to be set at any desired angle, which in turn allows the fixation pins held in each of the two portions **1010**A and **1010**C of the fixator body to be arranged into a variety of angular configurations.

[0110] The first portion **1010**A and the universal joint **1500** of the external fixator **2000** have the same structures as the first portion **1010**A and the universal joint **1500** of the external fixator **1000**. As shown in FIGS. **10**D and **10**E, the universal joint **1500** allows the first portion **1010**A and the second portion **1010**C to rotate about the two axles of the universal joint **1500** in the directions indicated by the arrows K and H.

[0111] Unlike the second portion **1010**B of the external fixator **1000**, the second portion **1010**C of the external fixator **2000** holds a set of one or more fixation pins via a set of one or more pin holes **1142** provided in a pin-holder **1143**. The pin-holder is provided within the internal bore **1111**C of the second portion **1010**C and is longitudinally movable within the internal bore **1111**C. Similar to the pin-holder **143** in the first portion **1010**A, the pin-holder **1143** also comprises a set of set screws **1186** for locking the fixation pins in the pin holes **1142**. The set screws **1186** are threaded into the pin-holder **1143** in orthogonal direction to the pin holes **1142** and urges against the fixation pins extending through the pin holes **1142** to lock the fixation pins within the pin holes **1142**. However, unlike the pin-holder **143**, the pin-holder **1143** does not have a driving screw **155** for moving the pin-holder **1143** longitudinally within the internal bore **1111**C. Thus, the internal bore **1111**C need not be threaded. While the longitudinal position of the pin-holder **143** in the first portion **1010**A is controlled by the use of the driving screw **155**, because the pin-holder **1143** is not threadably engaged to the internal bore **1111**C of the second portion **1010**C, the pin-holder **1143** freely slides within the internal bore **1111**C.

[0112] The second portion **1010**C is provided with at least one longitudinally extending slot **1126** for receiving the set screws **1186**. In the illustrated example, one longitudinally extending slot **1126** is shown but another slot **1126** may be provided diametrically opposed from the one shown. This will allow the pin-holder **1143** to be axially rotated 180 degrees to change the direction of accessing the set screws **1186**. The set screws **1186** act as guide pins as the pin-holder **1143** slides longitudinally within the internal bore **1111**C. The second portion **1010**C is also provided with a pair of diametrically opposed longitudinally extending slots **1116** (similar to the slots **116** in the first portion **1010**A). The longitudinally extending slots **1116** are aligned with the pin holes **1142** and thus accommodate the fixation pins inserted into the pin holes **1142**. The longitudinally extending slots **1116** also guide the fixation pins as the pin-holder **1143** moves in longitudinal direction.

[0113] In one embodiment, the pin holes **142** and **1142** may have oblong cross-section for purposes of enhancing the pin locking capability of the pin holes **142** and **1142**. The oblong cross-section may be elongated in the direction parallel to the axial movement of the set screws **186** and **1186** threading into their respective pin-holders **143** and **1143**. Because the pin holes **1142** have oblong cross-sectional shape, the widths of the pin holes **1142** are wider than the widths of the longitudinally extending slots **1116**. This allows the fixation pins held within the pin holes **1142** to be pressed against the sides of the longitudinally extending slots **1116** and thus locking the position of the fixation pins and the pin-holder **1143**.

[0114] As with the external fixator **1000**, the external fixator **2000** can be used for both compression as well as distraction procedures. However, in the embodiment where the set of fixation pins held in the second portion **1010**C of the external fixator **2000** are not fixed longitudinally, the external fixator **2000** allows greater adjustability in the positioning of the second portion **1010**C in its longitudinal direction.

[0115] FIGS. **11**A, **11**B, and **11**C-**11**F show an external fixator **3000** according to another embodiment. The external fixator **3000** includes a first portion **1010**A and a second portion **1010**C having the same structures as the first portion **1010**A and second portion **1010**C of the external fixator **2000** of FIG. **10**A. However, in the external fixator **3000**, the two

portions **1010**A and **1010**C are linked by a double universal joint **3010**. The double universal joint **3010** comprises an H-shaped body extending longitudinally between the two portions **1010**A and **1010**C. The H-shaped body of the double universal joint **3010** comprises two pairs of hinge legs **3011***a*, **3011***b* and **3013***a*, **3013***b* joined by a middle section **3012**. Each of the two pairs of the hinge legs **3011***a*, **3011***b* and **3013***a*, **3013***b* form a universal joint with the hinge legs **1502***a*, **1502***b* and **1506***a*, **1506***b*. Each of the two universal joints formed are similar to the universal joint **1500** of the external fixator **1000** of FIG. **8**A and functions in similar way to the universal joint **1500**. However, because the external fixator **3000** comprises two universal joints the angular adjustability of the two portions **1010**A and **1010**C of the external fixator **3000** is greater.

[0116] A first universal joint is formed between the first portion **1010**A and the double universal joint **3010** by the hinge legs **1502***a*, **1502***b* and the **3011***a*, **3011***b* hingeably joined by a first double-axle **1505**A. Each of the two axes of the first double-axle **1505**A are formed by the hinge locking screws **3021** and **3022** and the structure of the two axles are similar in structure to those formed by the hinge locking screws **1507***a* and **1507***b* of the external fixator **1000**. The hinge locking screw **3022** extends completely through the first double-axle **1505**A. The hinge locking screw **3022** also may be cannulated to provide a K-wire guide hole.

[0117] A second universal joint is formed between the second portion **1010**C and the double universal joint **3010** by the hinge legs **1506***a*, **1506***b* and the **3013***a*, **3013***b* hingeably joined by a second double-axle **1505**B. Each of the two axes of the second double-axle **1505**B are formed by the hinge locking screws **3023** and **3024** and the structure of the two axles are similar in structure to those formed by the hinge locking screws **1507***a* and **1507***b* of the external fixator **1000**. The hinge locking screw **3024** extends completely through the second double-axle **1505**B. The hinge locking screw **3024** also may be cannulated to provide a K-wire guide hole.

[0118] Shown in FIGS. **12**A-**12**D is an example of another universally flexible joint system **4000** that can be incorporated into the jointed fixators **5**, **1000**, **2000** and **3000** described herein. The joint system **4000** shown is a double jointed example. The joint system **4000** comprises two ball joints **4001** and **4002** connected by a center connecting piece **4010**. Each of the ball joints **4001** and **4002** have terminal ends **4042**A and **4042**B that are configured to be attached to one of the two portions of the fixators.

[0119] For example, the terminal end **4042**A of the ball joint **4001** can be attached to the first portion **1010**A of the fixator **3000** and the terminal end **4042**B of the ball joint **4002** can be attached to the second portion **1010**C of the fixator **3000** by any appropriate methods. In one example, the terminal ends **4042**A and **4042**B and the corresponding mating portions of the first and second portions **1010**A and **1010**C can be configured to be press-fitted to one another or welded together. In another example, the terminal ends **4042**A and **4042**B and the corresponding mating portions of the first and second portions **1010**A and **1010**C can be configured to be threaded into each other by screw threads. In these examples, the ends of the first and second portions **1010**A and **1010**C having the hinge legs **1502***a*, **1502***b* and **1506***a*, **1506***b* would need to be reconfigured accordingly to be joined to the terminal ends **4042**A or **4042**B.

[0120] The two ball joints **4001** and **4002** are symmetrical in structure. Thus, the details of the ball joint **4001** will be described which is equally applicable to the ball joint **4002**. The corresponding structures in ball joint **4002** are identified in the drawings with same numbers as in the ball joint **4001** with the trailing letter "B."

[0121] The ball joint **4001** comprises a ball-joint stem **4040**A with a ball **4041**A at one end and the terminal end **4042**A at the other end. The ball-joint stem **4040**A may be provided with a flange **4043**A to act as a stop when a fixator portion such as **1010**A is being attached to the terminal end **4042**A. The ball **4041**A is captured in a ball housing that comprises a first half **4030**A and a second half **4020**A that are configured to be threaded into each other while capturing the ball **4041**A in between the two halves. The first and second halves **4030**A, **4020**A may be cross pinned to prevent the two halves from coming apart after assembly.

[0122] Referring to the exploded view in FIG. **12**D, the first half **4030**A of the ball housing has an opening **4031**A at one end allowing the ball-joint stem **4040**A to extend through. The first half **4030**A is also provided with a female thread structure **4032**A. The second half **4020**A of the ball housing comprises a make thread structure **4021**A for threadably mating with the female thread structure **4032**A of the first half **4030**A. The second half **4020**A is also provided with a space **4022**A for accommodating the ball **4041**A. The second half **4020**A is also provided with a threaded bore **4023**A for receiving the first threaded stem **4012**A of the center connecting piece **4010**. As shown in FIGS. **12**D and **12**E, the space **4022**A, **4022**B for accommodating the ball **4041**A, **4041**B can have spherical curved contour or any other contour appropriate for holding the ball **4041**A, **4041**B within the ball housing.

[0123] FIG. **12**F illustrates another embodiment of the ball-joint stem **4040**A, **4040**B. The ball **4041**A, **4041**B can be provided with a threaded hole **4060** and threadably attached to the threaded ball-joint stem **4040**A.

[0124] The ball **4040**A captured in the ball housing formed by the ball housing halves **4020**A and **4030**A is initially free spinning to allow the joint to be freely bent. To lock the ball joint **4001**, the center connecting piece **4010** is then used to lock the ball joint **4001** by turning the center connecting piece **4010** in the locking direction which threads the first threaded stem **4012**A further into the second half **4020**A of the ball housing and urge against the ball **4041**A. As shown in FIG. **12**A, the center connecting piece **4010** is configured to have a nut-like structure **4011** to facilitate turning and locking the ball joint.

[0125] Referring to the FIG. **12**B, in one embodiment, all the threaded components in one ball joint are threaded in the same direction. However, the threaded components in each of the two ball joints **4001** and **4002** are threaded in the opposite direction with respect to each other. For example, if the threaded components in the ball joint **4001** have left-handed threads the threaded components in the ball joint **4002** have right-handed threads and vice versa. This means that the two threaded stems **4012**A and **4012**B of the connecting piece **4010** are oppositely threaded. This allows the user to lock both ball joints **4001** and **4002** at the same time by turning the center connecting piece **4010** in one direction and unlock by turning it in the opposite direction. Alternatively, the ball joints **4001** and **4002** can be locked or unlocked independently by turning just one of the second half **4020**A or **4020**B with respect to the center connecting piece **4010**.

[0126] Referring to FIGS. **13**A, **14**A-**14**D, an external fixator device **1** according to an embodiment is disclosed. The

device **1** includes one or more fixation pins **5***a* each having a threaded end suitable for engaging a bone piece. The fixator device includes an elongated fixator body **10** having an internally threaded bore **11** extending longitudinally through the length of the fixator body **10**. A pair of diametrically opposed longitudinally extending slots **16** are provided in the fixator body **10**. A slidable sleeve **20** for capturing and translating the one or more first set of fixation pins **5***a* is slidably placed over the fixator body **10**.

[0127] The slidable sleeve **20** has a longitudinally extending bore **21** in which the fixator body is slidably received. The slidable sleeve **20** can have a cylindrical shape as in the examples shown in the figures however it is not limited to the cylindrical shape. As discussed earlier, the outer shape of the fixator body **10** can be any appropriate shape and the longitudinally extending bore **21** of the sleeve **20** needs to match that cross-sectional shape. However, the outer shape of the sleeve **20** can be any desired shape. The slidable sleeve **20** also has a pair of diametrically opposed holes **22** for each of the one or more fixation pins **5***a* to be translated and locked by the slidable sleeve **20**. Each of the fixation pin **5***a* passes through one pair of diametrically opposed holes **22** in the slidable sleeve **20** and the diametrically opposed slots **16** in the fixator body in an orthogonal orientation to the longitudinal axis C of the fixator body **10**. As indicated in FIGS. **13**B and **14**A, driving set screw **15** is received in one end **17** of the fixator body **10** and threaded into the internally threaded bore **11** of the fixator body. The user can move the set screw into or out of the internally threaded bore **11** by turning the set screw with an appropriate tool. The driving set screw **15** is configured at one end to receive a tool such as an hex wrench, Robertson wrench, Torx wrench (star-shaped), screw driver, etc. For example, the driving set screw **15** illustrated in FIG. **14**A is provided with a receptacle **14** configured to receive a Torx wrench.

[0128] FIGS. **14**C and **14**D are cross-sectional views of the external fixator **1** of FIG. **13**A taken through lines A-A and B-B, respectively. FIG. **14**C illustrates the fixation pin **5***a* passing through the diametrically opposed pair of holes **22** and the pair of slots **16**. FIG. **14**D illustrates the driving set screw **15** being compressed against one of the fixation pins **5***a* (the one labeled as **5***a*'). By threading the driving set screw **15** into the threaded bore **11** of the fixator body **10** in the direction of the arrow D, the set screw **15** will push against the fixation pin **5***a*' and cause the assembly of the pins **5***a* and the slidable sleeve **20** to slide or translate with respect to the fixator body **10** in the direction of the arrow D. As the fixation pins **5***a* are translated, the slidable sleeve **20** maintains the pins' orientation with respect to the longitudinal axis C of the fixator body while the diametrically opposed longitudinal slots **16** in the fixator body **10** maintain the pins **5***a* on-axis. On-axis refers to the pins **5***a* traveling in the direction D along the longitudinal axis C of the fixator body. In this example, the fixation pins **5***a* are orthogonally oriented with respect to the longitudinal axis C. According to another aspect of the invention, however, the orientations of the fixation pins **5***a* are not limited to being orthogonal to the longitudinal axis C. To accommodate various arrangements of the bones being engaged with the device, each the fixation pins **5***a* can be at different orientation with respect to the longitudinal axis C and with respect to each other. In those embodiments, the holes **22** on the sleeve **20** will be appropriately positioned to accommodate the fixation pins **5***a*. Each pair of holes **22** for receiving one fixation pin would not be diametrically opposed. FIG. **14**E shows an exemplary arrangement where one of the fixation pin **5***a*" is oriented at an angle α with respect to the adjacent fixation pin **5***a* so that the pins converge. If the fixation pins are arranged in converging configuration, they do not need to be threaded.

[0129] According to an embodiment, the external fixator device **1** further includes at least one pair of diametrically opposed pin holes **12** provided on the fixator body **10** near the fixator body's second end **18** for receiving one or more second set of fixation pins **5***b* through the fixator body. The second set of fixation pins **5***b* are for engaging a second bone piece. A pair of diametrically opposed pin holes **12** is provided for each of the fixation pins **5***b*. A locking set screw **25** is received in and threadably engages the internally threaded bore **11** of the fixator body for locking the second fixation pin **5***b*. Because the fixation pins **5***b* pass through and traverse the internally threaded bore **11** via the diametrically opposing holes **12**, after the one or more fixation pins **5***b* are engaged in the second bone piece, the pin **5***b* can be locked in place by tightening the locking set screw **25** against the portion of the fixation pin **5***b* that is inside the threaded bore **11**. Unlike the fixation pin **5***a* received in the first end **17** of the fixator body through the slidable sleeve **20**, the position of the second fixation pin **5***b* along the length of the fixator body **10** is fixed and not slidable in axial direction with respect to the fixator body **10**.

[0130] As illustrated in FIG. **13**A, when the external fixator device **1** is used on a patient to fixate bone parts B**1** and B**2** to compress the fracture or an osteotomy site F (hereinafter referred to as the "bone repair site"), the adjustable or sliding end **17** of the fixator device is affixed to the bone part B**1** by way of the first set of one or more fixation pins **5***a* held by the slidable sleeve **20**. The second end **18** of the fixator device is affixed to the bone part B**2** via the second set of one or more fixation pins **5***b*.

[0131] Because the fixation pins **5***b* in the second end **18** of the fixator device is not translatable or slidable, by applying a compression force against the first set of fixation pins **5***a* by threading the first set screw **15** further into the fixator body **10**, the fixation pins **5***a* and **5***b* can be pushed towards each other. In turn, the bone parts B**1** and B**2** are pushed towards each other and apply a compression force at the bone repair site F.

[0132] Referring to FIGS. **13**B and **15**A-**15**C, an external fixator device **2** according to another embodiment is described. The fixator device **2** is substantially the same as the fixator device **1** of FIG. **13**A except that its non-slidable second end **18** of its fixator body **10** is configured with a spring-loaded pin-locking cap **30** for locking the second fixation pins **5***b* in the fixator device. Like the fixator device **1**, the fixator body **10** has at least one pair of diametrically opposed pin holes **12** near the fixator body's second end **18** for receiving a second fixation pin **5***b* through the fixator body.

[0133] As shown in FIGS. **15**A-**15**D, the spring-loaded pin-locking cap **30** has a body with two open ends **38**, **39**. The pin locking cap **30** has a bore **31** for receiving the second end **18** of the fixator body **10**. In the example shown where the fixator body **10** has a cylindrical shape, the bore **31** has an inside diameter that is substantially equal to the outer diameter of the fixator body **10** enabling the second end **18** of the fixator body to be received into the pin locking cap's first open end **38**. The second open end **39** of the pin-locking cap **30** is configured to receive a locking screw **35** that is used to lock the second fixation pins **5***b* in the fixator device. The pin-locking cap **30** also is provided with at least one pair of

diametrically opposed pin-locking slots **32**. By aligning the pin-locking slots **32** and the pin holes **12** on the fixator body **10**, a bone fixation pin **5***b* can be inserted through the aligned pin-locking slots **32** and the pin holes **12** as shown in FIG. **15**C.

[0134] The second open end **39** of the pin locking cap **30** has an inwardly extending flange portion **139** with an opening **137** for receiving the locking screw **35** in the center. The locking screw **35** includes a head portion **35***a* and a threaded shaft portion **35***b*. The threads on the threaded shaft portion **35***b* matches the female threads on the threaded bore **11** of the fixator body **10** so that the locking screw **35** threads into the threaded bore **11**. The opening **137** is sufficiently large to allow the threaded shaft portion **35***b* of the locking screw **35** to extend through the opening **137** and into the locking cap **30** but the head portion **35***a* of the locking screw **35** is configured and sized not to fit through the opening **137**. The head portion **35***a* can be configured to receive a screw driver or other types of tools (e.g. socket wrench, Torx wrench, etc.) for turning the screw **35**.

[0135] As shown in FIG. **15**B, a coil spring **37** is provided within the pin locking cap **30** and positioned between the fixator body **10** and the flange portion **139**. In an assembled but unlocked state, the coil spring **37** urges against the flange portion **139** pushing the fixator body **10** and the locking cap **30** apart but the locking screw **35** which is threaded into the inner bore **11** of the fixator body **10** holds the locking cap **30** in place. FIG. **15**C shows the position of the second fixation pins **5***b* with respect to the pin locking slots **32** in the unlocked state. The pins **5***b* are freely positioned in the middle of the pin locking slots **32**. To lock the fixation pins **5***b*, the locking screw **35** is threaded into the fixator body **10**, which in turn pushes the pin-locking cap **30** in the same longitudinal direction until the pin locking slots **32** press against the fixation pins **5***b* preventing the fixation pins **5***b* from moving as shown in FIG. **15**D.

[0136] Referring to FIGS. **20**A-**20**C, an offset pin clamp **190** for use in securing the second set of fixation pins **5***b* at the non-adjustable end **18** of the fixator body **10** according to another embodiment is disclosed. The offset pin clamp **190** holds the second set of fixation pins **5***b* offset from the fixator body **10**. The fixation pins **5***b* being offset from the fixator body **10** refers to the fact that in this embodiment, the fixation pins **5***b* do not go through the fixator body as in the previously described embodiments. The offset pin clamp **190** includes a longitudinally extending bore **191** in which the fixator body **10** is received. One or more pin holes **192** are provided in the offset pin clamp **190** for receiving and holding one or more fixation pins **5***b*. The pin holes **192** are provided in the portion of the offset pin clamp **190** above the bore **191**.

[0137] Provided in combination with the pin holes **192** is a threaded hole **194** for receiving a countersink-head screw **196**. The threaded hole **194** is oriented orthogonal to the bore **191** and the pin holes **192**. The countersink-head screw **196** includes a flared head **196***h* and a shaft **196***s*. The shaft **196***s* is threaded to threadably engage the hole **194**.

[0138] The threaded hole **194** of the offset pin clamp **190** extends from the top surface of the offset pin clamp **190** to the bore **191** so that the countersink-head screw **196** can extend into the space defined by the bore **191**. The hole **194** includes a countersink **194***h* for accommodating the flared head **196***h* of the countersink-head screw **196** and a threaded lower portion **194***t*. The countersink **194***h* intersects the pin holes **192** forming openings **197** connecting the hole **194** and the pin holes **192**. The diameter of the pin holes **192** is appropriately sized for the fixation pins **5***b*, thus allowing the fixation pins **5***b* inserted into the pin holes **192** to be exposed and slightly protrude through the openings **197**. Once the fixation pins **5***b* are inserted into the pin holes **192**, the countersink-head screw **196** is threaded into the hole **194**. The threaded portion **196***t* of the countersink-head screw **196** threadably engages the threaded lower portion **194***t* of the hole **194** and the flared head **196***h* of the countersink-head screw **196** will come in contact with the portion of the fixation pins **5***b* that is exposed through the opening **197** and secures the position of the fixation pins **5***b* by clamping down on them.

[0139] Referring to FIG. **20**C, the offset pin clamp **190** is shown in conjunction with a fixator body **10** that is received within the bore **191** of the clamp **190**. The fixation pins **5***b* are held in the pin holes **192**. The offset pin clamp **190** is also provided with a locking set screw **195** for securing the offset pin clamp **190** onto the fixator body **10**. The offset pin clamp **190** is configured with a second threaded hole **193** for threadably receiving the locking set screw **195**. Because the offset pin clamp **190** can be placed anywhere along the length of the fixator body **10** and axially rotatable about the fixator body **10** before locking its position with the locking set screw **195**, the user can adjust the location and angular attitude of the second set of fixation pins **5***b*. This adds additional versatility to the external fixator device.

[0140] Referring to FIG. **13**C, according to an embodiment, an external fixation device **3** includes the fixator body **10** having the slidable sleeve **20**, shown in FIG. **13**A, for holding the first set of one or more fixation pins **5***a* at first end **17** of the fixator body **10** and provided with the offset pin clamp **190** at the second end **18** of the fixator body **10** for holding the second set of one or more fixation pins **5***b*. This embodiment of the external fixation device can be used for both compression as well as distraction of two bone pieces, one of the two bone pieces being affixed to the first set of fixation pins **5***a* and the second bone piece being affixed to the second set of fixation pins **5***b*.

[0141] Referring to FIGS. **16**-**17**E, according to another embodiment, an external fixator device **4** for fixating bone parts includes the fixator body **10**, the slidable sleeve **20** for holding the first set of one or more fixation pin **5***a* as shown in FIG. **13**A, and a pin-holding set screw **40**. The pin-holding set screw **40** is received in one end of the fixator body **10** and threadably engages the internally threaded bore **11** of the fixator body. The pin-holding set screw **40** includes a cam **70** that is used to lock the position of the fixation pins **5***a*.

[0142] FIGS. **17**A-**17**E show the structural details of the pin-holding set screw **40** assembly. The pin-holding set screw **40** includes a cannulated threaded head portion **55** and an elongated pin holder **43** having at least one pin hole **42** for passing the fixation pin **5***a* therethrough. The elongated pin holder **43** is rotatably attached to the cannulated threaded head portion **55**, the pin holder **43** being in axial alignment with the longitudinal axes of the cannulated threaded head portion **55** and the threaded bore **11** of the fixator body **10** so that the threaded head portion **55** can freely rotate about the longitudinal axis of the pin-holding set screw **40** with respect to the elongated pin holder **43**.

[0143] The threaded head portion **55** is provided with a cannula **56** extending longitudinally therethrough. One end of the threaded head portion **55** is configured with a socket **57** (see FIG. **17**B) appropriately structured for receiving a tool, such as a screw driver or one of a variety of wrenches, for

turning the head portion **55**. The elongated pin holder **43** is provided with a center stem **45** that extends longitudinally from one end and extends through the cannula **56** of the threaded head portion. During assembly of the set screw **40** assembly, after the center stem **45** is inserted through the cannula **56**, the tip **46** of the center stem **45** is peened or appropriately flared as shown in the cross-sectional view in FIG. **17**C to hold the pin holder **43** and the threaded head portion **55** together. The attachment, however, is sufficiently loose so that the threaded head portion **55** and the pin holder **43** axially rotate with respect to each other. The center stem **45** effectively functions as the rotational axle for the threaded head portion **55**. The inner surface of the cannula **56** and the outer surface of the center stem **45** are appropriately finished to minimize any friction between the two contacting surfaces.

[0144] The pin-holding set screw **40** is inserted, with the pin holder **43** first, into the threaded bore **11** near the adjustable end **17** of the fixator body **10** so that the pin holes **42** provided in the pin holder **43** is accessible through the longitudinal slots **16** of the fixator body **10**. After the slidable sleeve **20** is slid over the fixator body **10**, the pin holes **22** in the slidable sleeve **20** and the pin holes **42** in the pin holder **43** are aligned with the longitudinal slots **16** so that fixation pins **5***a* can be inserted through each pair of the diametrically opposed pin holes **22** of the sleeve **20** while passing through the pin holes **42** in the pin-holding shaft **43** as shown in FIG. **16**. Assembled in this manner, because the cannulated threaded head portion **55** is configured to threadably engage the threaded bore **11**, by turning the threaded head portion **55**, the pin-holding set screw **40** can be translated in axial direction within the threaded bore **11**.

[0145] The pin holes **42** provided on the pin-holding shaft **43**, if there are more than one, are spaced apart appropriately and bore through the longitudinal axis of the pin holder **43** to align with the one or more pairs of the pin holes **22** provided in the slidable sleeve **20**. This allows the fixation pins **5***a* to be inserted through the diametrically opposed pairs of pin holes **22**, the longitudinal slots **16**, and the pin holes **42** when the pin-holding set screw **40** is positioned inside the fixator body **10**. Because the pin holder **43** and the threaded head portion **55** are rotatable with respect to each other, the threaded head portion **55** can be turned within the threaded bore **11** while the first set of one or more fixation pins **5***a* are held by the slidable sleeve **20** and the pin holder **43**. By turning the threaded head portion **55**, the thread engagement between the head portion **55** and the threaded bore **11** allows the whole sliding assembly of the pin-holding set screw **40**, the fixation pins **5***a* and the slidable sleeve **20** to slide up and down the fixator body **10** along the path defined by the longitudinal slots **16**.

[0146] From the assembly described above, it will be understood that the orientation of the fixation pins **5***a* with respect to the fixator body **10** is determined by the configuration of the pin holes **22** in the slidable sleeve **20** and the pin holes **42** in the pin-holding set screw **40**. In an embodiment, that orientation is orthogonal to the longitudinal axis C of the fixator body **10**.

[0147] The elongated pin holder **43** is also provided with a camshaft receiving hole **44** near its end opposite from the center stem **45**. In the assembled state of the external fixation device **4**, a cam **70** is received into the camshaft receiving hole **44**. As shown in FIG. **17**D, the cam **70** has a camshaft portion **74** which is rotatably fitted into the camshaft receiving hole **44**. The camshaft receiving hole **44** is spaced apart from the pin holes **42** by a desired distance so that when the fixation pins **5***a* are positioned through the slidable sleeve **20** and the pin holder **43**, the cam **70** is located adjacent to the slidable sleeve **20** as shown in FIG. **16**.

[0148] As shown in the end view of the cam in FIG. **17**E, the camshaft portion **74** is off-centered with respect to the cam **70** thus providing the cam action when the cam is turned. Preferably, the cam **70** is in contact with the slidable sleeve **20** when the cam **70** is in an unlocked position without any space between the cam **70** and the slidable sleeve **20**, which allows immediate cam action as the cam **70** is turned from the unlocked position to the locked position. Preferably, the cam **70** is provided with a socket **73** appropriately shaped for receiving a tool for turning the cam **70**.

[0149] As shown in FIG. **16**, the non-slidable end **18** of the external fixator **4** can be configured similar to the non-slidable end **18** of the external fixator **1** illustrated in FIG. **13**A. The second set of one or more fixation pins **5***b* are inserted through the at least one pair of diametrically opposed pin holes **12** provided in the fixator body **10** and locked with the locking set screw **25** threadably engaged into the threaded bore **11** from the non-slidable end **18**.

[0150] In affixing the external fixator **4** to the bone pieces to be repaired, the first set of fixation pins **5***a* are placed in a desired position (typically defined by their distance from the second set of fixation pins **5***b* that are held at the other end of the fixator body **10**) on the fixator body **10**. The first set of one or more fixation pins **5***a* and the second set of one or more fixation pins **5***b* are affixed into their respective bone parts by threading the fixation pins into the bone parts. Once the fixation pins **5***a* and **5***b* are affixed into their respective bone parts, the second set of fixation pins **5***b* are locked. The second set of fixation pins **5***b* can be locked at the non-adjustable end **18** of the fixator body **10** by the same means described above in connection with the embodiments shown in FIGS. **13**A and **13**B. The first set of fixation pins **5***a* are locked by the use of the cam **70** as described above. Then the bone parts are compressed by threading the pin-holding set screw **40** into the fixator body **10** and urging against the first set of fixation pins **5***a*.

[0151] According to another embodiment, the external fixator **4** includes the slidable sleeve **20** and the cam **70** as shown in FIG. **16** but the non-slidable end **18** of the device is configured as shown in the embodiments of FIGS. **13**B and **15**A-**15**D for holding the second set of one or more fixation pins **5***b*.

[0152] According to another embodiment, the external fixator **4** includes the slidable sleeve **20** and the cam **70** as shown in FIG. **16** but the non-slidable end **18** of the device is configured with the offset pin clamp **190** shown in FIGS. **20**A-**20**C for holding the second set of one or more fixation pins **5***b*.

[0153] Referring to FIGS. **18**A and **18**B, another embodiment of a slidable sleeve **60** for use in conjunction with the pin-holding set screw **40** is disclosed. Similar to the slidable sleeve **20** of FIG. **16**, the slidable sleeve **60** is provided with at least one pair of diametrically opposed pin holes **62** for receiving a fixation pin **5***a*. The slidable sleeve **60** is provided with an additional pair of diametrically opposed holes **63**, **64** are provided for receiving the cam **70**. The camshaft **74** extends through the front-side hole **63** on the slidable sleeve **60**, through the camshaft receiving hole **44** of the pin-holding shaft **43**, and rotatably fitted into the back-side hole **64** so that the cam **70** can be turned between its lock and unlock positions. The holes **63**, **64** and **44** are positioned with respect to the fixation pin holes **62** and **42** such that the cam **70** is

sufficiently close to the adjacent fixation pin **5***a* to lock the fixation pin. As with the external fixation device **4** of FIG. **16**, the second set of fixation pins **5***b* at the non-adjustable end **18** of the fixator body **10** can be locked by the same means described above in connection with the embodiments shown in FIGS. **13**A and **13**B.

[0154] According to another embodiment, an external fixation device includes the fixator body **10**, the slidable sleeve **60** described above for holding the first set of one or more fixation pins **5***a* and at least one pair of diametrically opposed pin holes **12** provided on the fixator body **10** near the fixator body's second end **18** similar to the external fixator device **1** of FIG. **13**A. Each pair of diametrically opposed pin holes **12** are for receiving a second fixation pin **5***b*.

[0155] According to another embodiment, an external fixation device includes the fixator body **10**, the slidable sleeve **60** described above for holding the first set of one or more fixation pins **5***a* and the spring-loaded pin-locking cap **30** described above in reference to FIG. **13**B for locking the second set of fixation pins **5***b* at the non-adjustable end **18** of the fixator body **10**.

[0156] According to another embodiment, an external fixation device includes the fixator body **10**, the slidable sleeve **60** described above for holding the first set of one or more fixation pins **5***a* and the offset pin clamp **190** described above in reference to FIGS. **20**A-**20**C for holding the second set of one or more fixation pins **5***b* at the non-slidable end **18** of the fixator body **10**.

[0157] Referring to FIGS. **19**A-**19**D, another embodiment of a slidable sleeve **90** for use in conjunction with the fixator body **10** is disclosed. The slidable sleeve **90** includes a longitudinally extending bore **91** in which the fixator body **10** is slidably received. One or more pin holes **92** are provided in the slidable sleeve **90** for receiving and holding one or more fixation pins **5***a* and the slidable sleeve **90** is configured to hold the fixation pins **5***a* offset from the fixator body **10**. The fixation pins **5***a* being offset from the fixator body **10** refers to the fact that in this embodiment, the fixation pins **5***a* do not go through the fixator body **10** as in the case of the slidable sleeves **20** and **60**. This is shown in FIG. **19**B, which is a longitudinal cross-sectional view of the slidable sleeve **90**. The pin holes **92** are provided in the portion of the slidable sleeve **90** above the bore **91** i.e. offset from the bore **91**.

[0158] Provided in combination with the pin holes **92** is a threaded hole **94** for receiving a countersink-head screw **96**. The threaded hole **94** is oriented orthogonal to the bore **91** and the pin holes **92**. FIG. **19**C is an illustration of an exemplary countersink-head screw **96**. The screw **96** includes a flared head **96***h* and a shaft **96***s*. The shaft **96***s* may be threaded to threadably engage the hole **94**. Preferably, the shaft **96***s* has a threaded portion **96***t* near the head **96***h* and the remainder of the shaft is not threaded.

[0159] The threaded hole **94** of the slidable sleeve **90** extends from the top surface of the slidable sleeve **90** to the bore **91** so that the countersink-head screw **96** can extend into the space defined by the bore **91**. The hole **94** includes a countersink **94***h* for accommodating the flared head **96***h* of the countersink-head screw **96** and a threaded lower portion **94***t*. The countersink **94***h* intersects the pin holes **92** forming openings **97** connecting the hole **94** and the pin holes **92**. The diameter of the pin holes **92** is appropriately sized for the fixation pins **5***a* thus allowing the fixation pins **5***a* inserted into the pin holes **92** to be exposed and protrude through the openings **97**. Once the fixation pins **5***a* are inserted into the pin holes **92**, the countersink-head screw **96** is threaded into the hole **94**. The threaded portion **96***t* of the countersink-head screw **96** threadably engages the threaded lower portion **94***t* of the hole **94** and the flared head **96***h* of the countersink-head screw **96** will come in contact with the portion of the fixation pins **5***a* that is exposed through the openings **97** and clamp down on the fixation pins **5***a*.

[0160] Referring to FIG. **19**D, the slidable sleeve **90** is shown in conjunction with a fixator body **10** that is received within the bore **91** of the sleeve **90** and fixation pins **5***a* are held in the pin holes **92**. When the countersink-head screw **96** is threaded into the hole **94** for clamping the fixation pins **5***a* as shown, the unthreaded shaft portion **96***s* of the countersink-head screw extends through the longitudinal slots **16** of the fixator body and into the threaded bore **11** of the fixator body **10**. By using the driving set screw **15** threaded into the bore **11** of the fixator body **10**, the slidable sleeve **90** and, thus, the fixation pins **5***a*, can be moved by engaging and pushing the shaft **96***s* of the countersink-head screw **96**. Preferably, the portion of the shaft **96***s* that comes in contact with the driving set screw **15** is not threaded so that the contact engagement between the set screw and the shaft **96***s* is smooth.

[0161] The pin holes **92** extend through the slidable sleeve **90** at an angle generally orthogonal to the fixator body **10** as shown in FIG. **19**A. However, the pin holes **92** can be oriented in the slidable sleeve **90** at different angles with respect to the fixator body **10** as desired for particular applications.

[0162] According to an embodiment, an external fixation device includes the fixator body **10**, the slidable sleeve **90** described above for holding the first set of one or more fixation pins **5***a* and at least one pair of diametrically opposed pin holes **12** provided on the fixator body **10** near the fixator body's second end **18** similar to the external fixation device **1** of FIG. **13**A. Each pair of diametrically opposed pin holes **12** are for receiving a second fixation pin **5***b*. As in the fixation device **1**, after the fixation pin **5***b* is engaged in a bone part, the second set of one or more fixation pins **5***b* can be locked in place by tightening the locking set screw **25** against the portion of the fixation pin **5***b* that is traversing through the threaded bore **11**.

[0163] According to another embodiment, an external fixation device includes the fixator body **10**, the slidable sleeve **90** described above for holding the first set of one or more fixation pins **5***a* and the spring-loaded pin-locking cap **30** described above for locking the second set of one or more fixation pins **5***b* at the non-adjustable end **18** of the fixator body **10**.

[0164] In another embodiment, the longitudinal slots **16** extend along a substantial portion of the length of the fixator body **10** and two of the slidable sleeves **90** are provided on the fixator body **10** to allow the device to be used as a bone compression device. Each of the two slidable sleeves **90** would hold a set of one or more fixation pins **5***a*. With the two sets of fixation pins affixed to their respective bone pieces, the slidable sleeves **90** can be urged toward each other to compress the two bone pieces together.

[0165] Referring to FIG. **22**, according to another embodiment, an external fixator device **6** may include an elongated fixator body **10**, a slidable sleeve **90** of FIG. **19**A at one end of the fixator body **10** holding the first set of fixation pins **5***a* and cooperating with the longitudinal slots **16** of the fixator body **10**, and an offset pin clamp **190**, described above in reference to FIGS. **20**A-**20**C, at the second end **18** of the fixator body for holding the second set of one or more fixation pins **5***b*. The

second set of fixation pins **5***b* can be affixed to a bone part B**1** and locked into position on the fixator body **10** by way of the offset pin clamp **190**. The first set of one or more fixation pins **5***a* can be affixed to a second bone part B**2** and attached to the fixator body **10** via the slidable sleeve **90**. This external fixator device **6** can be used for distraction or compression of the two bone parts by threading a set screw **15** into the threaded bore **11** of the fixator body **10** from the appropriate end of the fixator body **10** with respect to the slidable sleeve **90**.

[0166] For example, by inserting and threading the set screw **15** at the first end **17** of the fixator body **10**, the fixator **6** can be used to put the two bone parts B**1**, B**2** in compression by pushing the slidable sleeve **90** (and thus the first set of fixation pins **5***a*) towards the offset pin clamp **190**. By inserting and threading the set screw **15** at the second end **18** of the fixator body **10**, the fixator **6** can be used to distract the two bone parts B**1**, B**2** apart by pushing the slidable sleeve **90** away from the offset pin clamp **190**. The set screw **15** can be inserted into the threaded bore **11** of the fixator body **10** from the second end **18** because the offset pin clamp **190** does not have any components that protrude into the threaded bore **11**. The mechanism by which the slidable sleeve **90** is moved along the fixator body **10** using the set screw **15** is described above in connection with FIGS. **19**A-**19**D.

[0167] Referring to FIG. **21**, two or more offset pin clamps **190** can be used with a fixator body **100** to configure an external fixator device **5** where the fixation pins held by each of the offset pin clamps can be adjusted to any location along the length of the fixator body **100**. Because the offset pin clamp **190** does not require any of its components to protrude into its longitudinally extending bore **191**, the fixator body **100** can be a hollow tube or a solid rod.

[0168] Referring to FIG. **23**A, a rotatable pin clamp **290** that can be used in combination with the slidable sleeve **90** or the offset pin clamp **190** is disclosed. FIG. **23**A shows the rotatable pin clamp **290** that is assembled in combination with the slidable sleeve **90** described earlier in connection with FIGS. **19**A-**19**D. The rotatable pin clamp **290** is configured to hold an additional set of one or more fixation pins **5***c* in addition to the one or more fixation pins **5***a* held by the slidable sleeve **90**. The rotatable pin clamp **290** is configured to be rotated about the longitudinal axis of the countersink-head screw **96** as represented by the arrow R in FIG. **23**A.

[0169] As illustrated, the rotatable pin clamp **290** holds another set of one or more fixation pins **5***c* further offset (with respect to the first set of one or more fixation pins **5***a*) from the fixator body **10**. This provides additional adjustability and adaptability to the external fixation device by allowing the fixation pins **5***c* to be affixed to bone parts positioned at different orientation with respect to the external fixation device. FIG. **23**B shows the rotatable pin clamp **290** that is assembled in combination with the offset pin clamp **190** discussed earlier in connection with FIGS. **20**A-**20**C and holds additional set of one or more fixation pins **5***d*.

[0170] FIG. **23**D is a more detailed illustration of the rotatable pin clamp **290**. The exemplary rotatable pin clamp **290** illustrated has a disc-shaped body but it can have any outline shape as appropriate. The clamp **290** includes a top side **291** and a bottom side **293** and is provided with a hole **294** extending from the top side **291** to the bottom side **293** for receiving the countersink-head screw **96**. On the bottom side **293** of the clamp **290** is a protruding flange **298** around the hole **294**. The contour of the protruding flange **298** mirrors the contour of the countersinks **94***h*, **194***h* of the slidable sleeve **90** and the offset pin clamp **190**, respectively. The hole **294** is configured with a countersink at its top side for receiving the flared head **96***h*, **196***h* of the countersink-head screws **96**, **196**.

[0171] As shown in the cross-sectional view FIG. **23**C, when the rotatable pin clamp **290** is stacked on top of the offset pin clamp **190** the protruding flange **298** mates into the countersink **194***h* of the offset pin clamp **190** and the hole **294** functions as an extension of the hole **194** of the offset pin clamp **190**. Preferably, the hole **294** is not threaded and when the countersink-head screw **196** is inserted into the hole **294** the countersink-head screw **196** threadably engages the threaded portion **194***t* of the hole **194** in the offset pin clamp **190**. Thus, the first fixation pins **5***a* held in the pin holes **192** and the fixation pins **5***c* held in the pin holes **292** of the rotatable pin clamp **290** are clamped and secured by threading the countersink-head screw **196** into the hole **194**. The flared head **196***h* will clamp down on the fixation pins **5***c* held in the pin holes **292** and in turn the protruding flange **298** will clamp down on the fixation pins **5***a* held in the pin holes **192**.

[0172] In the embodiment where a rotatable pin clamp **290** is assembled in combination with the slidable sleeve **90**, the cross-sectional structure is similar to the one shown in FIG. **23**C except that the slidable sleeve **90** does not have the second threaded hole **193** for threadably receiving a locking set screw **195**.

[0173] The embodiments described in the foregoing disclosure are presented as examples. The scope of the present invention is to be limited only by the following claims.

What is claimed is:

1. An orthopedic device for fixating bone parts comprising:

at least one bone fixation pins suitable for engaging a bone piece;

a fixator body having an internally threaded bore extending longitudinally therethrough;

a pair of opposed longitudinally extending slots in the fixator body; and

a pin-holder received within the internally threaded bore of the fixator body and configured to removably hold the set of one or more bone fixation pins extending through the pair of opposed longitudinally extending slots, the pin-holder longitudinally movable within the fixator body for controlling the position of the set of bone fixation pins within the fixator body.

2. The orthopedic device of claim **1**, wherein the fixator body is configured to removably hold a second set of one or more bone fixation pins at a location fixed along the fixator body.

3. The orthopedic device of claim **2**, wherein the fixator body is provided with at least one pair of opposed pin holes for removably holding the second set of one or more bone fixation pins.

4. The orthopedic device of claim **1**, wherein the pin-holder further comprises a driving screw rotatably attached to the pin-holder and threadably engaging the threaded bore of the fixator body for moving the pin-holder longitudinally within the fixator body.

5. The orthopedic device of claim **1**, wherein said pin-holder comprises:

one or more pin holes extending laterally through the pin-holder for receiving said first set of one or more bone fixation pins and said pin-holder being configured to receive one or more set screws for impinging on each of the first set of one or more bone fixation pins received in

each of said one or more pin holes for securing the bone fixation pins in the pin-holder.

6. The orthopedic device of claim **1**, wherein said pin-holder comprises:

one or more pin holes extending laterally through the pin-holder for receiving said first set of one or more bone fixation pins; and

one or more set screws provided within said pin-holder for impinging on said one or more bone fixation pins received in said one or more pin holes for securing the bone fixation pins in the pin-holder.

7. The orthopedic device of claim **7**, further comprising:

a longitudinally extending slot provided in the fixator body through which the one or more set screws provided within said pin-holder is accessed for impinging on the first set of one or more bone fixation pins received in said one or more pin holes.

8. The orthopedic device of claim **1**, further comprising:

at least a pair of opposed pin holes provided in the fixator body near the fixator body's second end for receiving a second set of bone fixation pins through the fixator body; and

a set screw received in the second end of the fixator body and threadably engaging the internally threaded bore of the fixator body for locking the second bone fixation pin.

9. An orthopedic device comprising:

one or more bone fixation pins suitable for engaging a bone piece;

a fixator body having a first end and a second end and an internally threaded bore extending longitudinally therethrough;

a pair of opposed longitudinally extending slots provided in the fixator body;

a pin-holder received within the fixator body threadably engaging the internally threaded bore and configured to removably hold first set of one or more bone fixation pins, said fixation pins extending through said pair of slots opposed from one another via said pin-holder, wherein said pin-holder is longitudinally movable within the fixator body, whereby the position of the first set of bone fixation pins along the fixator body's longitudinal axis is controlled.

10. The orthopedic device of claim **9**, wherein said pin-holder is rotatably engaged to a driving screw, said driving screw threadably engaging the internally threaded bore of the fixator body, whereby the pin-holder is longitudinally moved within the fixator body by threading and unthreading said driving screw.

11. The orthopedic device of claim **9**, wherein said pin-holder comprises:

one or more pin holes extending laterally through the pin-holder for receiving said first set of one or more bone fixation pins and said pin-holder being configured to receive one or more set screws for impinging on each of the first set of one or more bone fixation pins received in each of said one or more pin holes for securing the bone fixation pins in the pin-holder.

12. The orthopedic device of claim **9**, wherein said pin-holder comprises:

one or more pin holes extending laterally through the pin-holder for receiving said first set of one or more bone fixation pins; and

one or more set screws provided within said pin-holder for impinging on said one or more bone fixation pins received in said one or more pin holes for securing the bone fixation pins in the pin-holder.

13. The orthopedic device of claim **12**, further comprising:

a longitudinally extending slot provided in the fixator body through which the one or more set screws provided within said pin-holder is accessed for impinging on the first set of one or more bone fixation pins received in said one or more pin holes.

14. The orthopedic device of claim **9**, further comprising:

at least a pair of opposed pin holes provided in the fixator body near the fixator body's second end for receiving a second set of bone fixation pins through the fixator body; and

a set screw received in the second end of the fixator body and threadably engaging the internally threaded bore of the fixator body for locking the second bone fixation pin.

15. The device of claim **9** wherein the fixator body comprises a first part and a second part, the first pair of opposed longitudinally extending slots being provided in the first part and the pin-holder is received within the internally threaded bore of the first part, the second set of one or more bone fixation pins being removably held in the second part; and

the device further comprising a universal joint connecting the first part and the second part.

16. The device of claim **15**, wherein the universal joint comprising a double-axle member providing two axes of rotation for the universal joint; and

a cannulated hinge-locking pin extending completely through the double-axle along one of the two axes of rotation, the cannulated hinge-locking pin providing a cannula for receiving a K-wire.

17. An orthopedic device for fixating bone parts comprising:

two sets of one or more bone fixation pins suitable for engaging a bone piece;

a fixator body having a first part and a second part, the first and second parts being connected by a joint, each of the first and second parts having an internally threaded bore extending longitudinally therethrough;

a first pair of opposed longitudinally extending slots in the first part of the fixator body;

a first pin-holder received within the internally threaded bore of the first part and configured to removably hold the first set of one or more bone fixation pins extending through the first pair of opposed longitudinally extending slots, the pin-holder longitudinally movable within the first part for controlling the position of the set of bone fixation pins within the first part;

a second pair of opposed longitudinally extending slots in the second part of the fixator body;

a second pin-holder received within the internally threaded bore of the second part and configured to removably hold the second set of one or more bone fixation pins extending through the second pair of opposed longitudinally extending slots, the pin-holder longitudinally movable within the second part.

18. The orthopedic device of claim **17**, wherein the joint is a universal joint.

19. The orthopedic device of claim **17**, wherein the joint comprises two universal joints.

20. The orthopedic device of claim **19** wherein the two universal joints are formed by two ball joints.

21. A method of fixating two bones relative to one another comprising:

percutaneously placing a first fixation pin into a first bone piece;

placing an external fixator over the first fixation pin by having the fixation pin go through a pin hole provided at one end of the external fixator's elongated body, said elongated body having two ends and an internally threaded bore extending longitudinally therethrough:

positioning the elongated body's second end over a second bone piece;

positioning a pin-holder, configured to move longitudinally within the internally threaded bore and removably hold one or more fixation pins, along the length of the elongated body at a desired location over the second bone piece;

inserting a second fixation pin through a pin hole provided in the pin-holder and into the second bone piece;

locking the second fixation pin by tightening a set screw provided in the pin-holder; and

locking the first fixation pin by tightening a locking set screw provided within and threadably engaging the internally threaded bore of the elongated body.

22. The method of claim **21** wherein the pin-holder comprises a driving screw rotatably attached to the pin-holder and threadably engaging the internally threaded bore, wherein compressing the two bone pieces comprises:

turning the driving screw in a direction that will move the pin-holder towards the first fixation pin.

23. The method of claim **21** wherein the pin-holder comprises a driving screw rotatably attached to the pin-holder and threadably engaging the internally threaded bore, wherein distracting the two bone pieces comprises:

turning the driving screw in a direction that will move the pin-holder away from the first fixation pin.

* * * * *