US 20130325076A1

(19) **United States**

(12) **Patent Application Publication**

Palmer et al.

(10) **Pub. No.: US 2013/0325076 A1**

(43) **Pub. Date: Dec. 5, 2013**

(54) **LOWER EXTREMITY FUSION DEVICES AND METHODS**

(75) Inventors: **Andrew K. Palmer**, Eastham, MA (US); **Andrew Ariel Brief**, River Vale, NJ (US); **Roman Adrian Sibel**, Henderson, NV (US); **Kevin Palmer**, Boca Raton, FL (US); **Matt Andrew Heilala**, Anchorage, AK (US); **Gabriel Surma**, Winona Lake, IN (US); **Pamela C. Guzman**, Fort Wayne, IN (US); **Mary Pile**, Knoxville, TN (US)

(73) Assignee: **DEL PALMA ORTHOPEDICS, LLC**, Columbia City, IN (US)

(21) Appl. No.: **13/982,152**

(22) PCT Filed: **Jan. 26, 2012**

(86) PCT No.: **PCT/US2012/022723**

§ 371 (c)(1),
(2), (4) Date: **Jul. 26, 2013**

Related U.S. Application Data

(60) Provisional application No. 61/436,497, filed on Jan. 26, 2011, provisional application No. 61/500,026, filed on Jun. 22, 2011.

Publication Classification

(51) **Int. Cl.**
A61B 17/86 (2006.01)
A61B 17/88 (2006.01)

(52) **U.S. Cl.**
CPC ***A61B 17/8635*** (2013.01); ***A61B 17/8875*** (2013.01); ***A61B 17/88*** (2013.01)
USPC **606/318**; 606/104; 606/96

(57) **ABSTRACT**

A fusion implant and fusion members for fusing target fusion bones of a lower extremity. The fusion implant including internally threaded apertures of a first thread lead, and fusion members including threading of the first thread lead and threading of a second thread lead that is less than the first thread lead. The fusion implant and a targeting instrument being configured to couple to one another in a predefined orientation. The predetermined orientation resulting in alignment of aspects of the fusion implant with aspects of the targeting instrument. The targeting instrument providing both distraction and compression to the joint between the target fusion bones. A guide instrument for preparing one of the target fusion bones for fusion thereof. A surgical method for applying compression to the joint between the target fusion bones to facilitate fusion thereof utilizing a fusion implant, fusion members, a targeting instrument and a guide instrument.

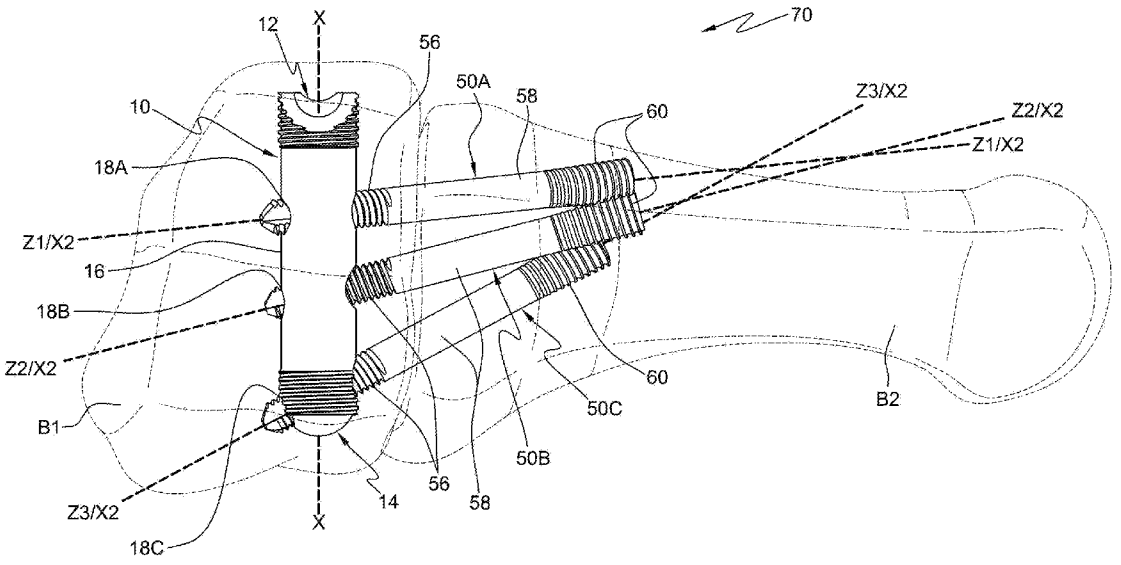

Paragon 28, Inc. v. Treace Medical Concepts, Inc.
PGR2026-00031
Treace Ex. 2002

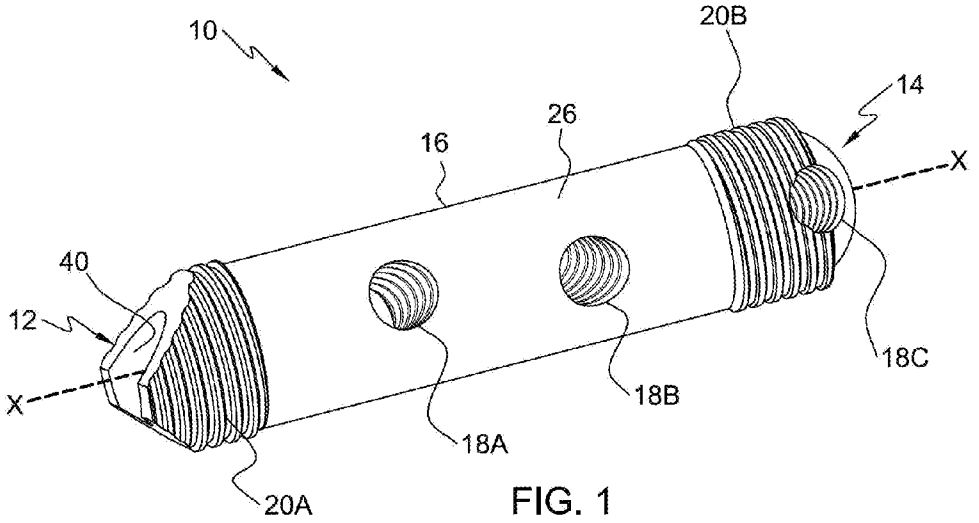
10
20B
14
26
16
X
40
12
18C
18B
X
18A
20A

FIG. 1

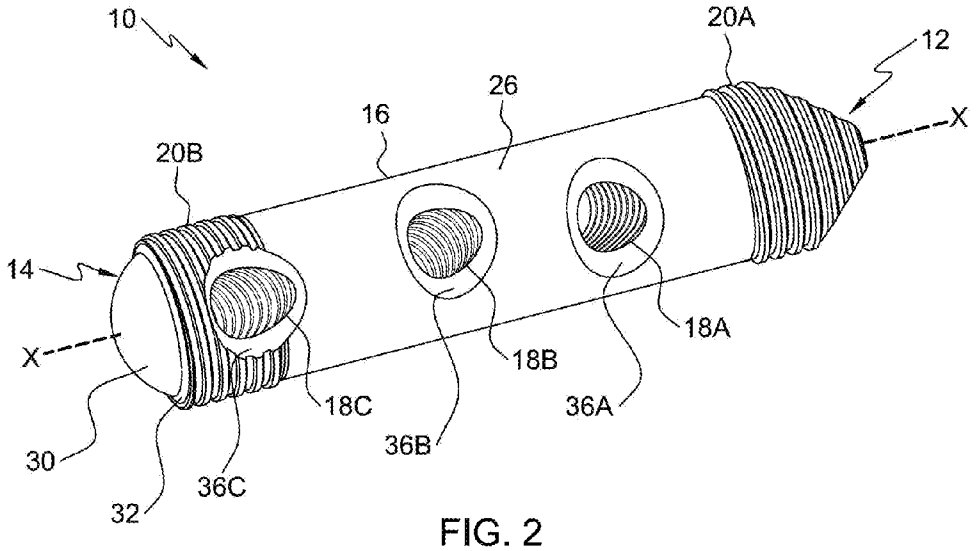
10
20A
12
26
16
X
20B
14
18A
X
18B
18C
36A
36B
30
36C
32

FIG. 2

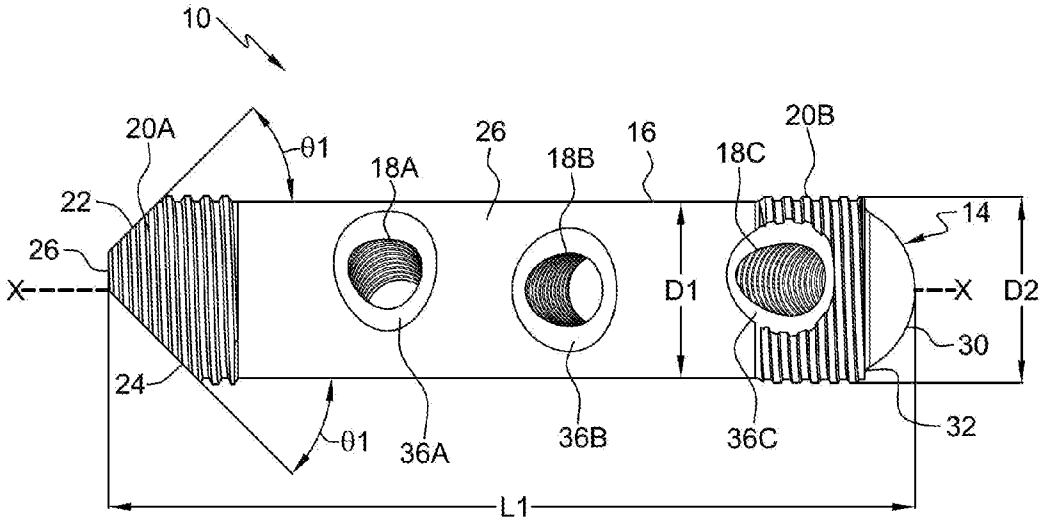
10
20A
θ1
22
26
X
24
18A
26
18B
16
18C
20B
14
D1
X
D2
30
θ1
36A
36B
36C
32
L1

FIG. 3

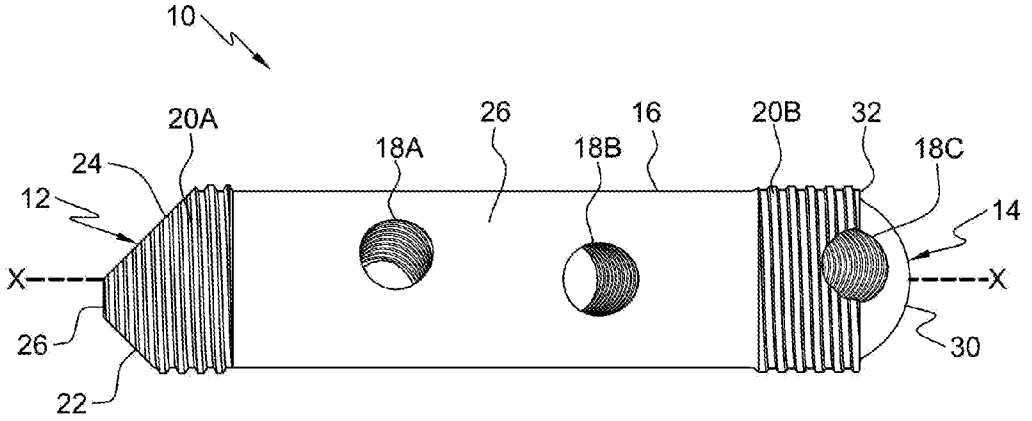
10
20A
24
12
X
26
22
18A
26
18B
16
20B
32
18C
14
X
30

FIG. 4

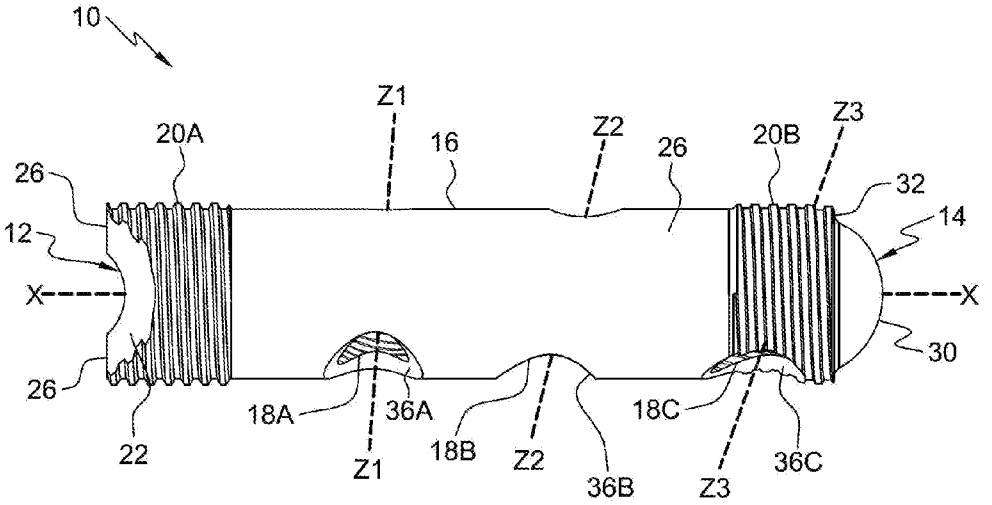
10
Z1
20A
16
Z2
26
20B
Z3
32
14
26
12
X
X
30
26
18A
36A
18B
Z2
18C
22
Z1
36B
Z3
36C

FIG. 5

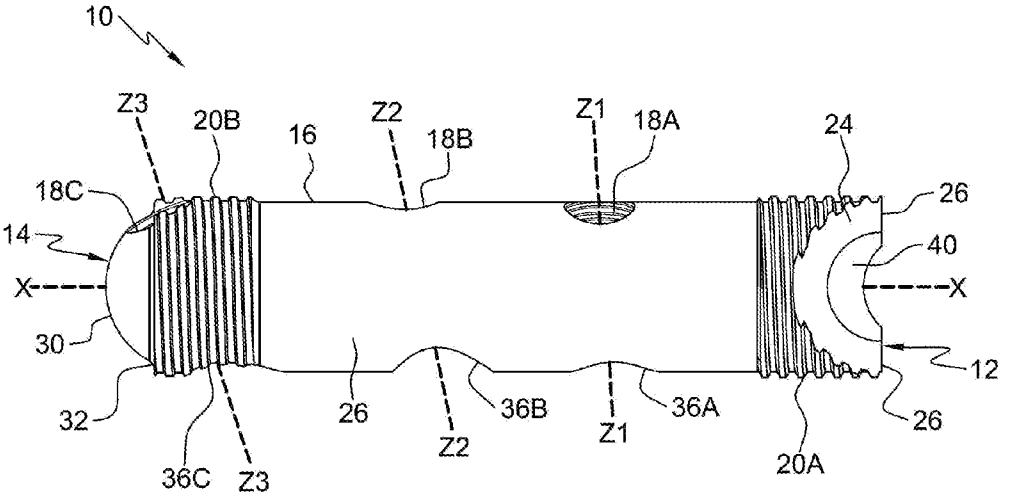
10
Z3
20B
16
Z2
18B
Z1
18A
24
18C
26
14
40
X
X
30
12
32
26
36B
36A
36C
Z3
Z2
Z1
20A
26

FIG. 6

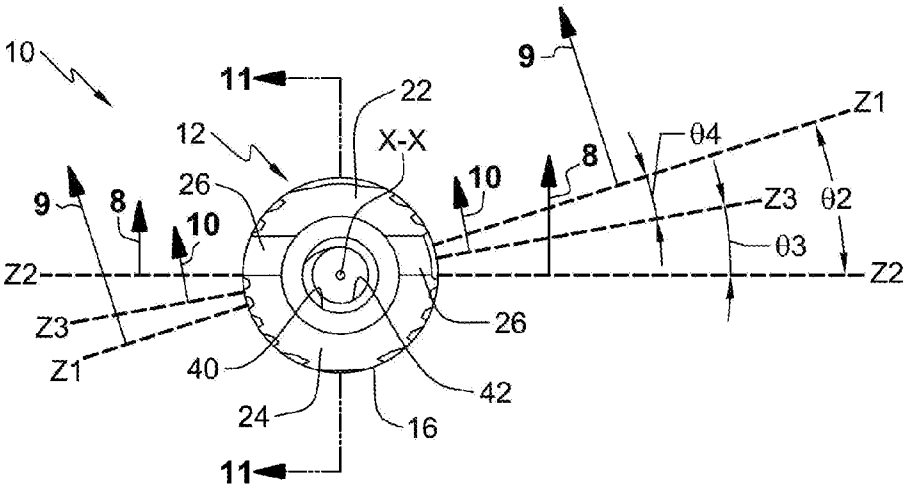
10
11
22
12
X-X
9
8
10
26
Z1
θ4
Z3
θ2
θ3
Z2
Z2
Z3
Z1
40
24
16
42
26
11

FIG. 7

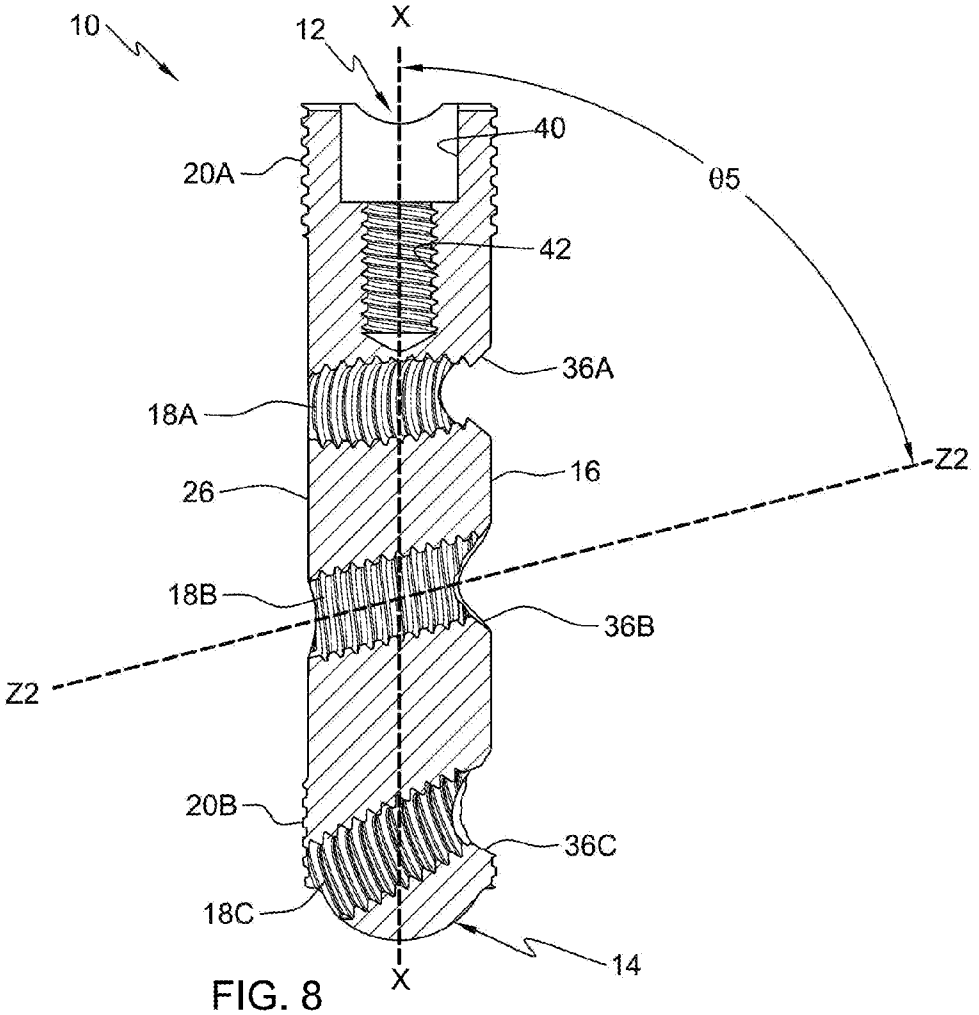
10
12
X
40
20A
θ5
42
36A
18A
16
26
Z2
18B
36B
Z2
20B
36C
18C
14
X

FIG. 8

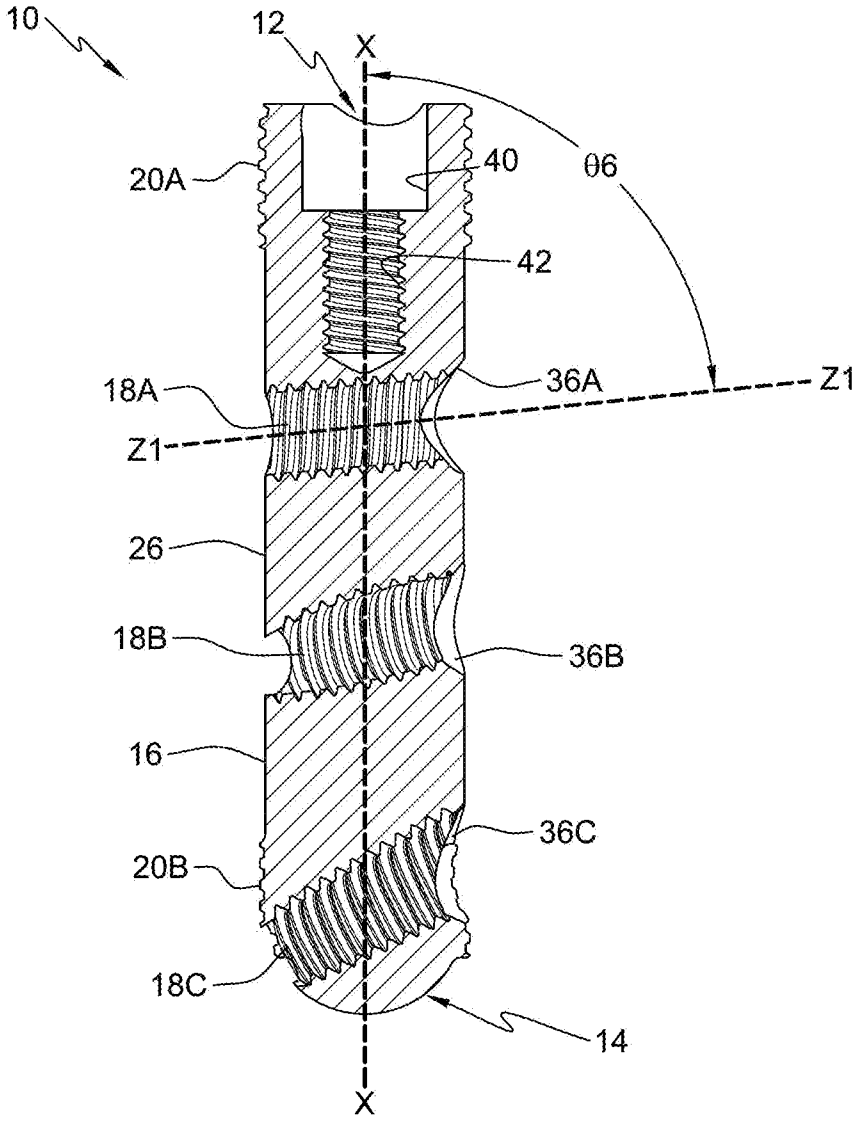

FIG. 9

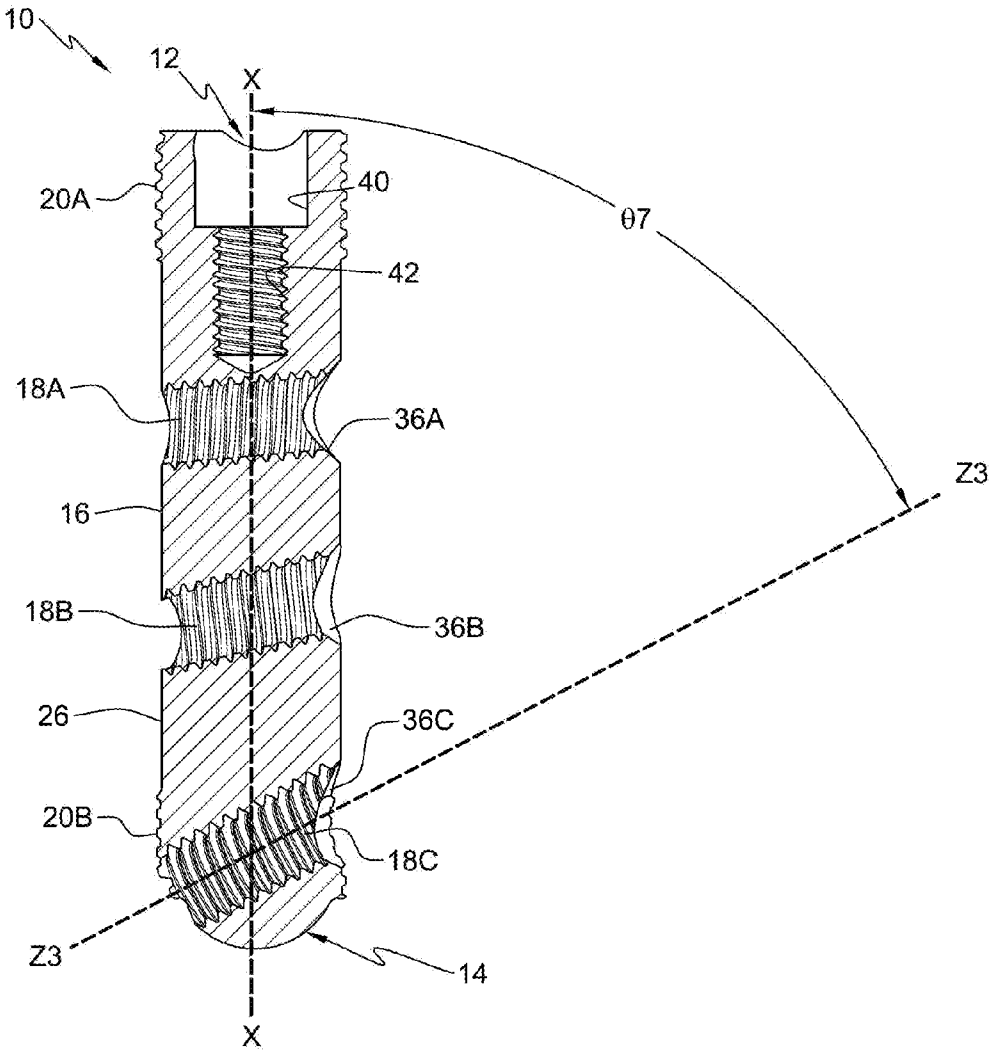

FIG. 10

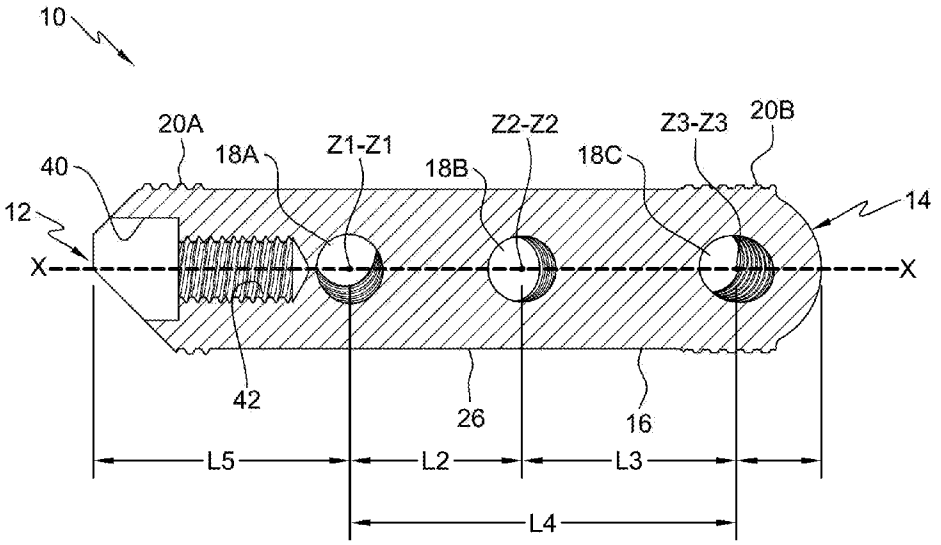
10
20A
18A
Z1-Z1
Z2-Z2
Z3-Z3
20B
40
18B
18C
12
14
X
X
42
26
16
L5
L2
L3
L4

FIG. 11

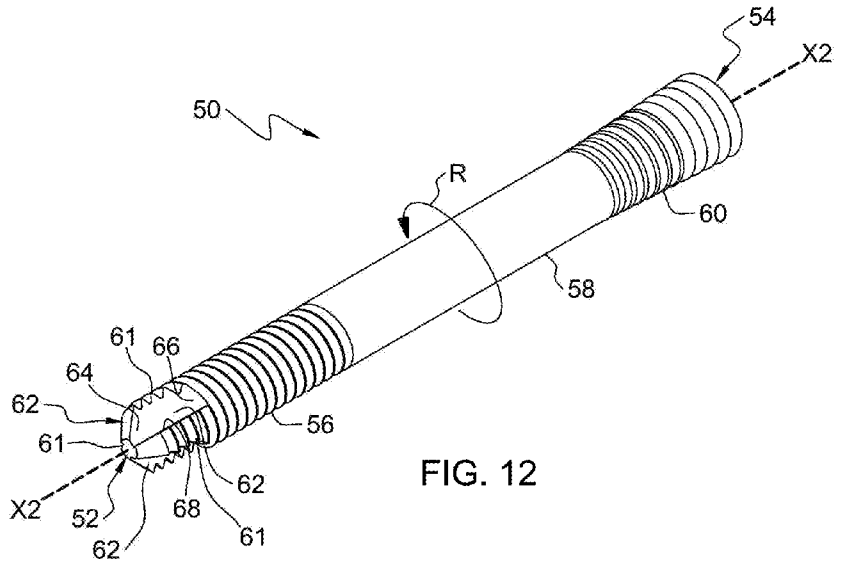
54
X2
50
R
60
58
61
66
64
62
61
56
62
X2
52
68
61
62

FIG. 12

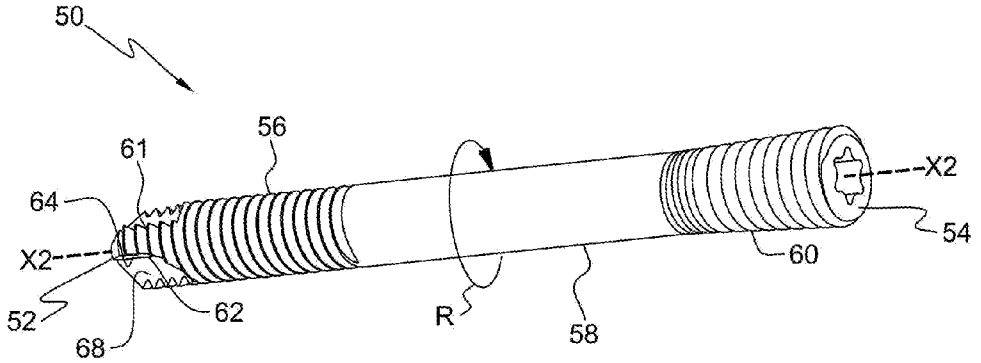
50
61
56
64
X2
52
68
62
R
58
60
X2
54

FIG. 13

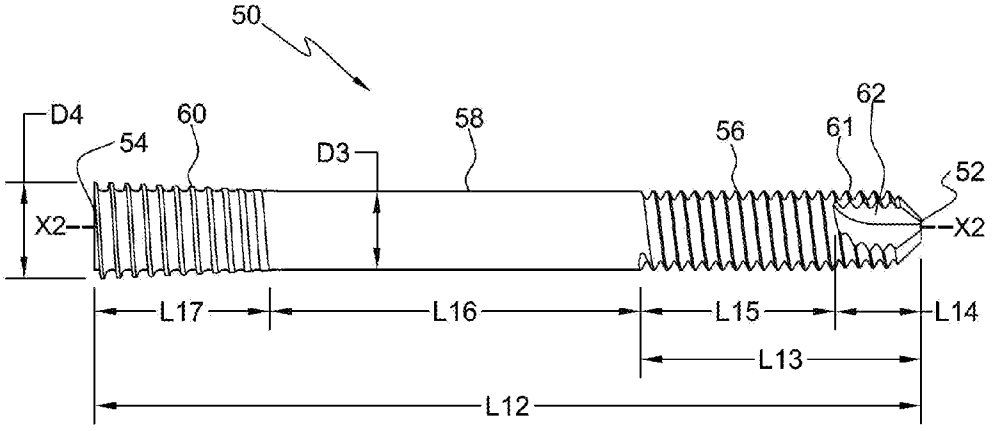
50
D4
54
60
58
D3
56
61
62
52
X2
X2
L17
L16
L15
L14
L13
L12

FIG. 14

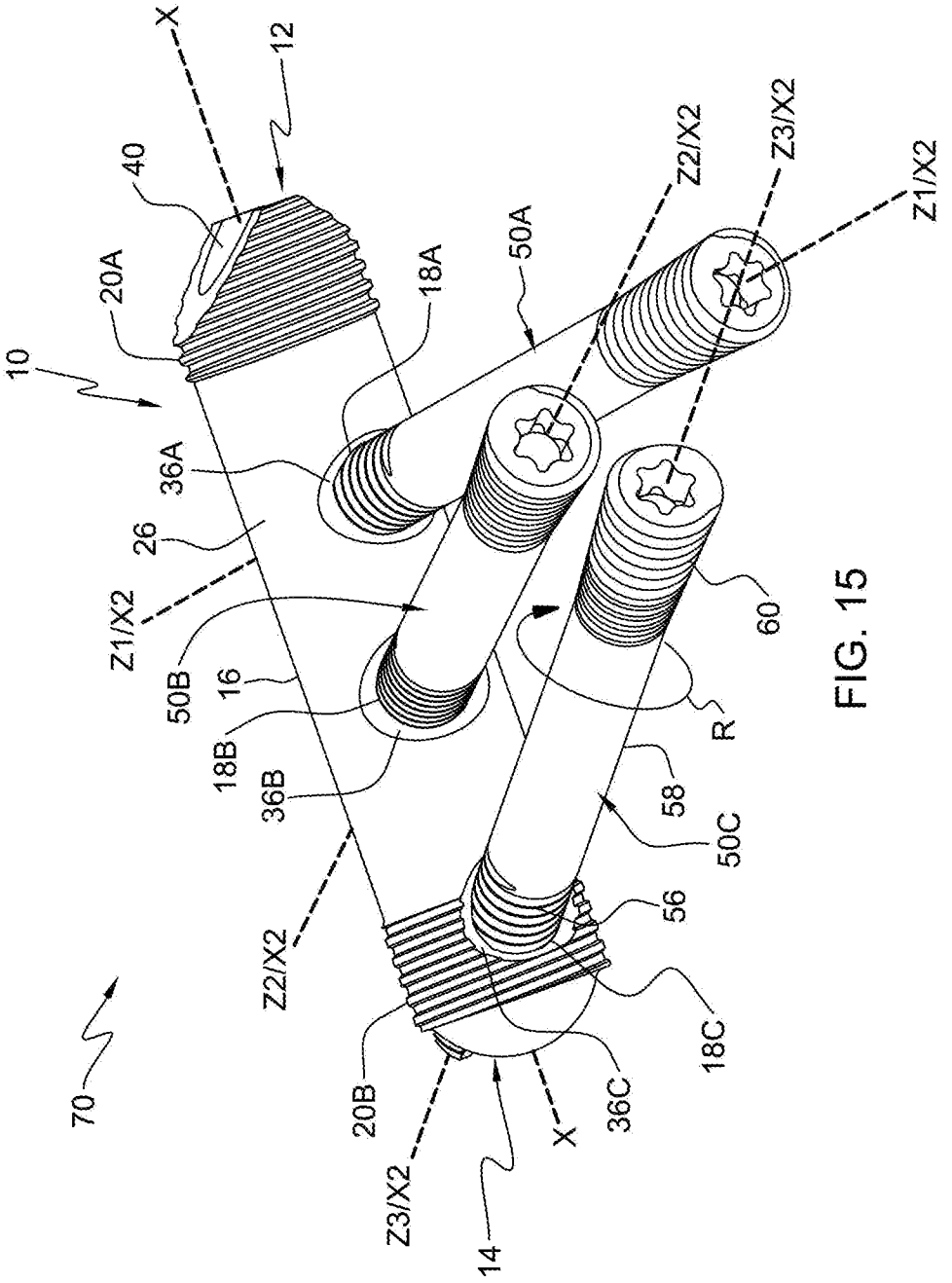
X
12
40
20A
10
18A
50A
Z2/X2
Z3/X2
Z1/X2
36A
26
Z1/X2
50B
16
18B
36B
60
R
58
50C
56
Z2/X2
18C
70
20B
36C
X
Z3/X2
14

FIG. 15

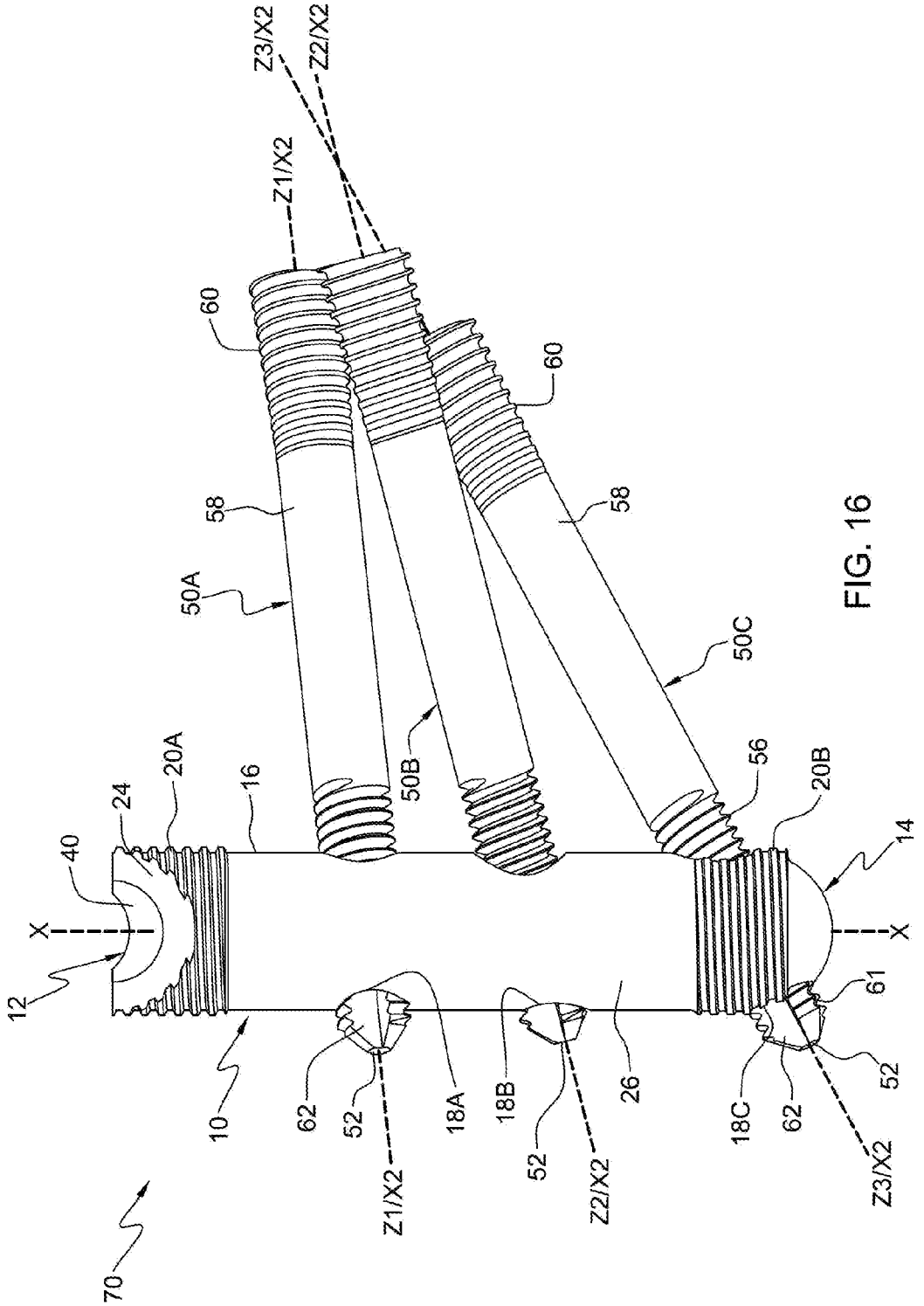
Z3/X2
Z2/X2
Z1/X2
60
60
58
58
50A
50C
50B
56
20A
20B
16
24
40
14
X
X
12
61
10
62
52
18A
18B
18C
26
52
62
52
Z1/X2
Z2/X2
Z3/X2
70

FIG. 16

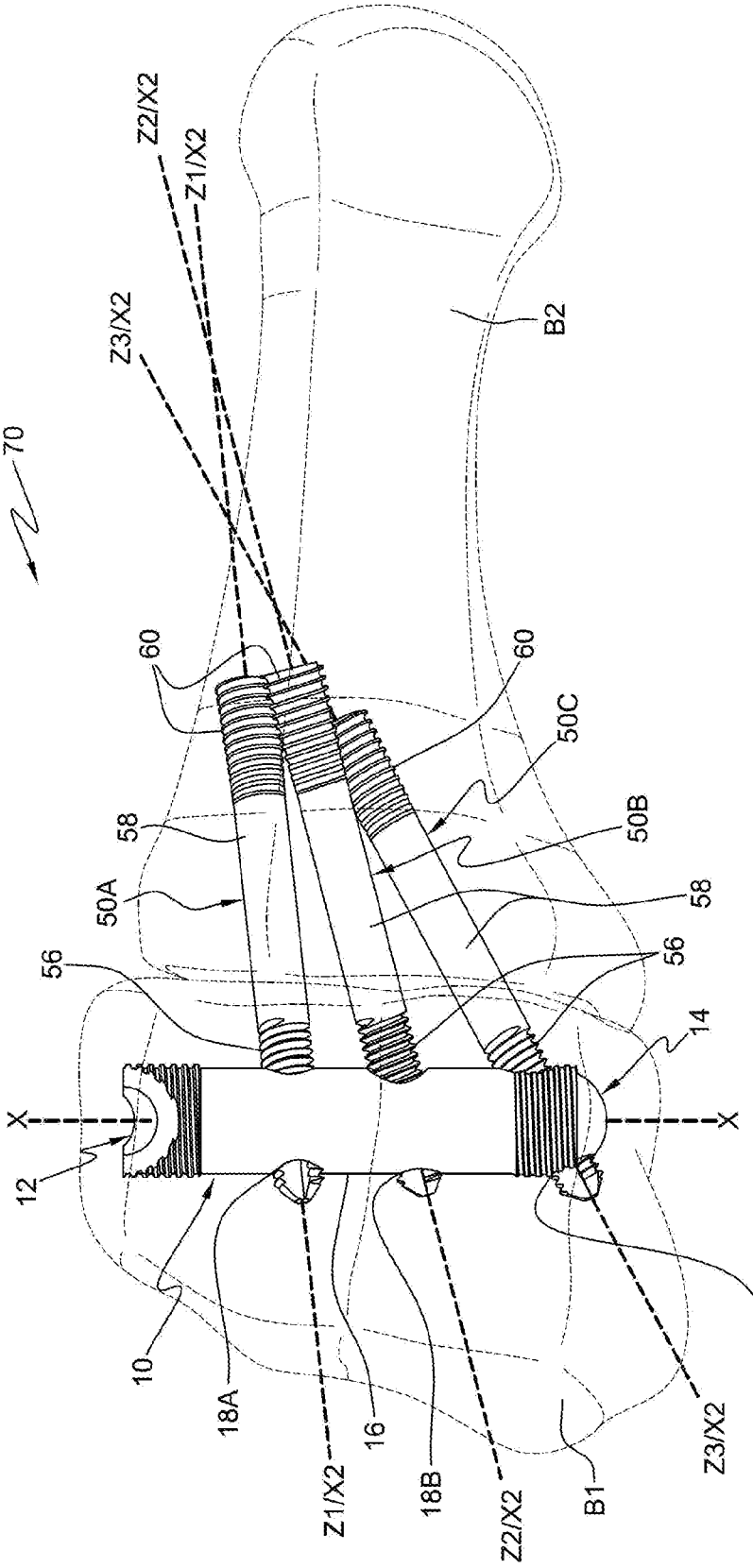
70
Z2/X2
Z1/X2
Z3/X2
B2
60
60
50C
58
50B
50A
58
56
56
14
X
X
12
10
18A
Z1/X2
16
18B
Z2/X2
B1
Z3/X2
18C

FIG. 17

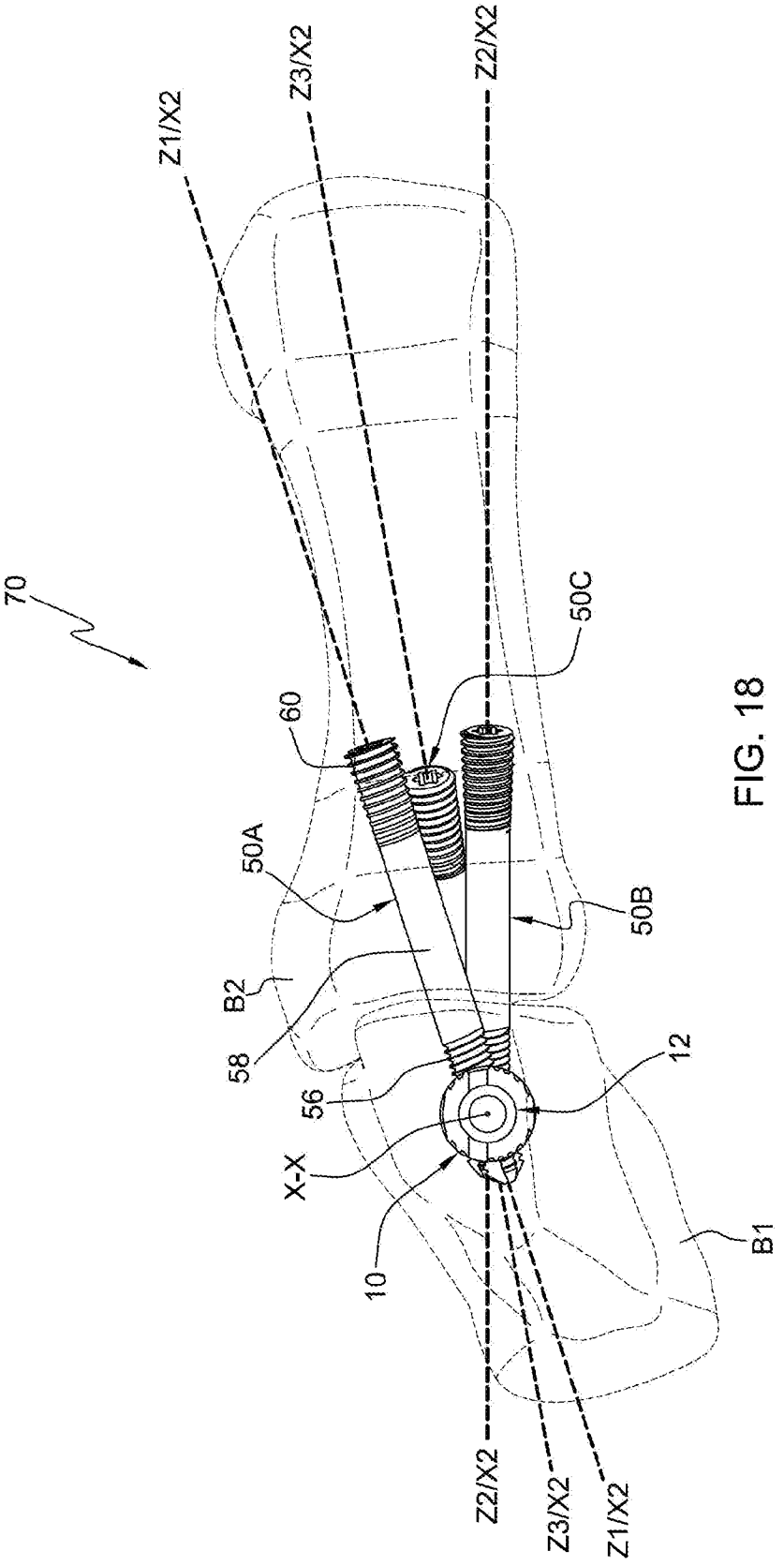
70
Z1/X2
Z3/X2
Z2/X2
50C
60
50A
50B
B2
58
56
12
X-X
10
B1
Z2/X2
Z3/X2
Z1/X2

FIG. 18

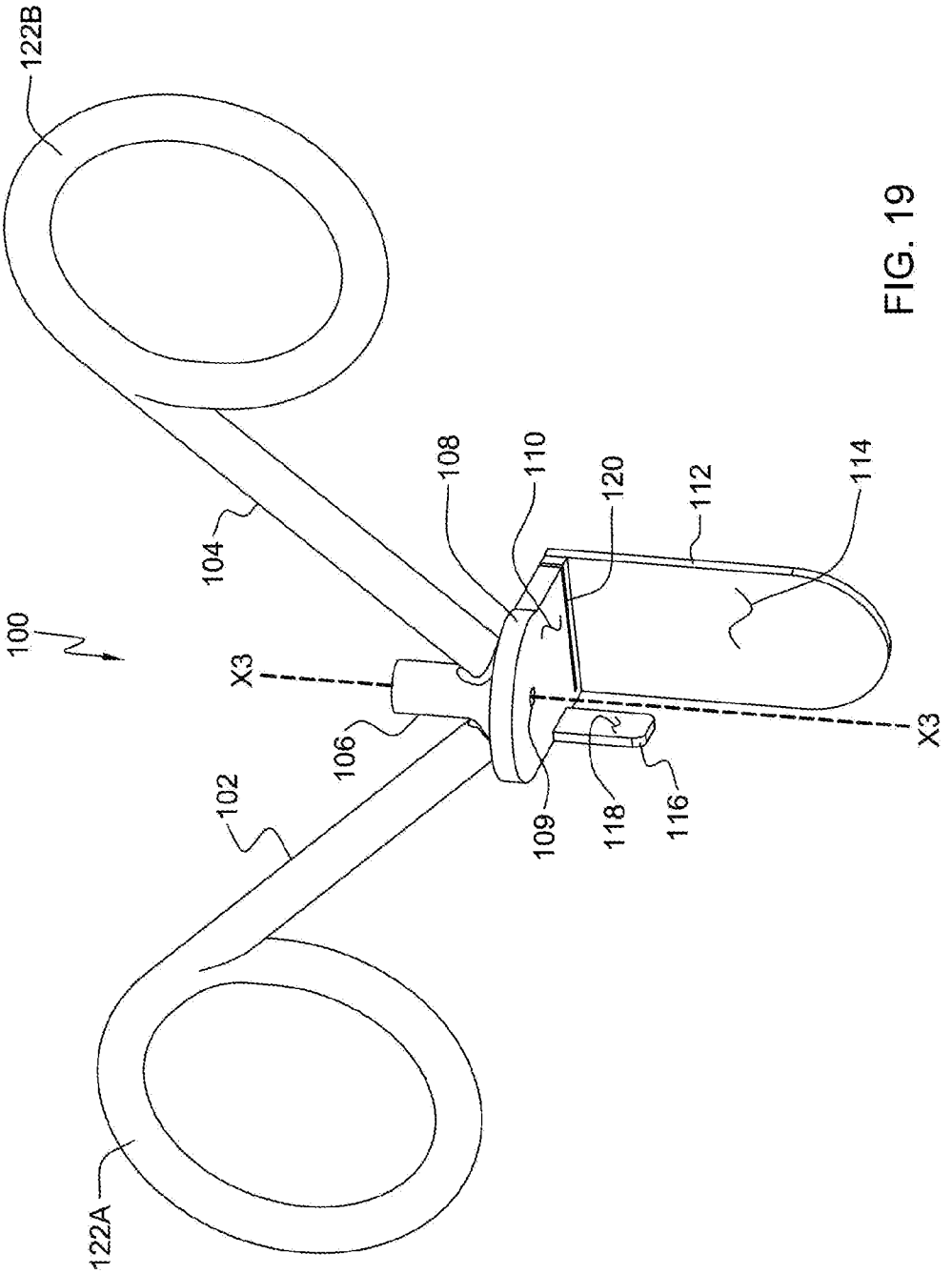

FIG. 19

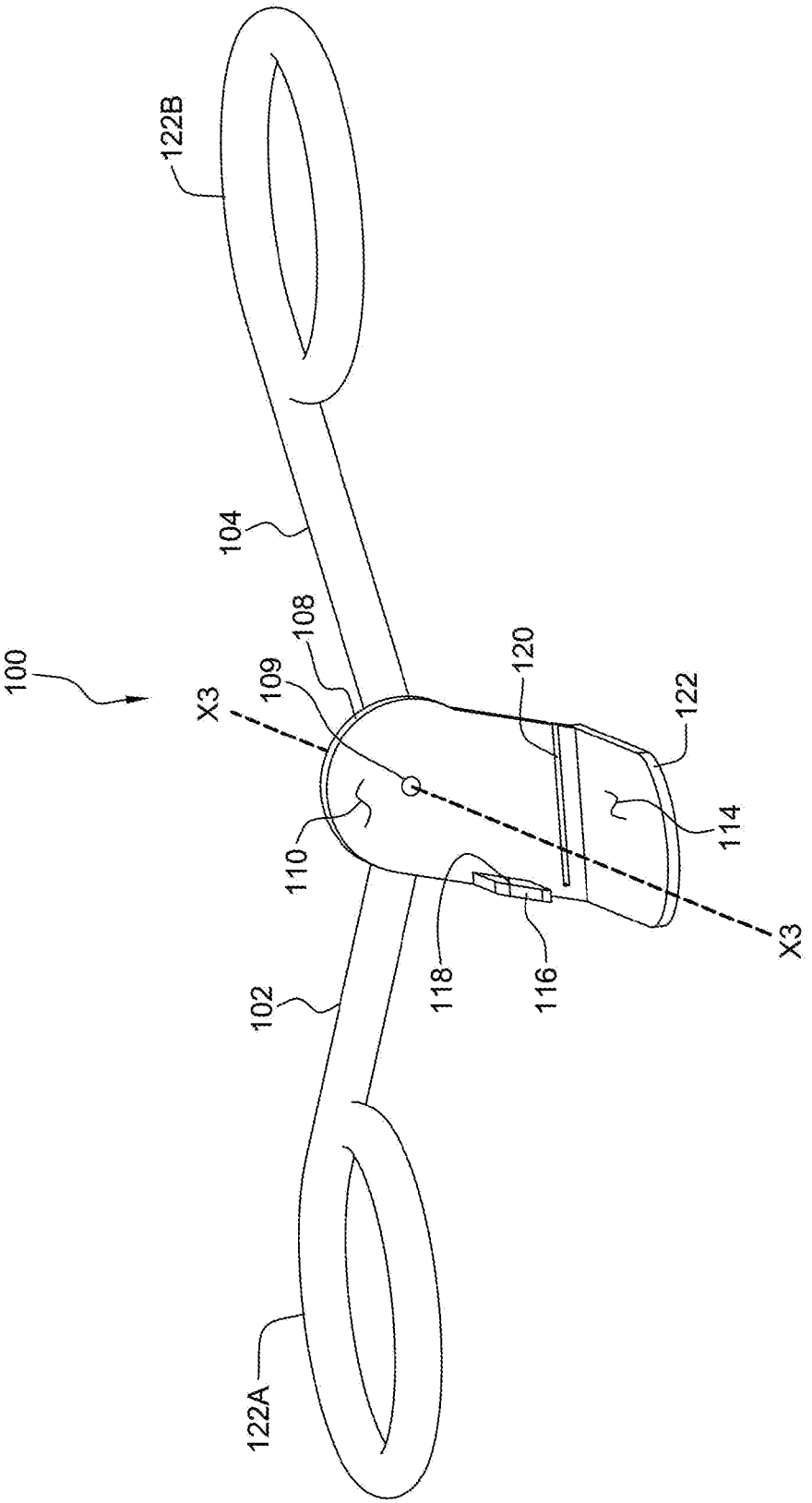

FIG. 20

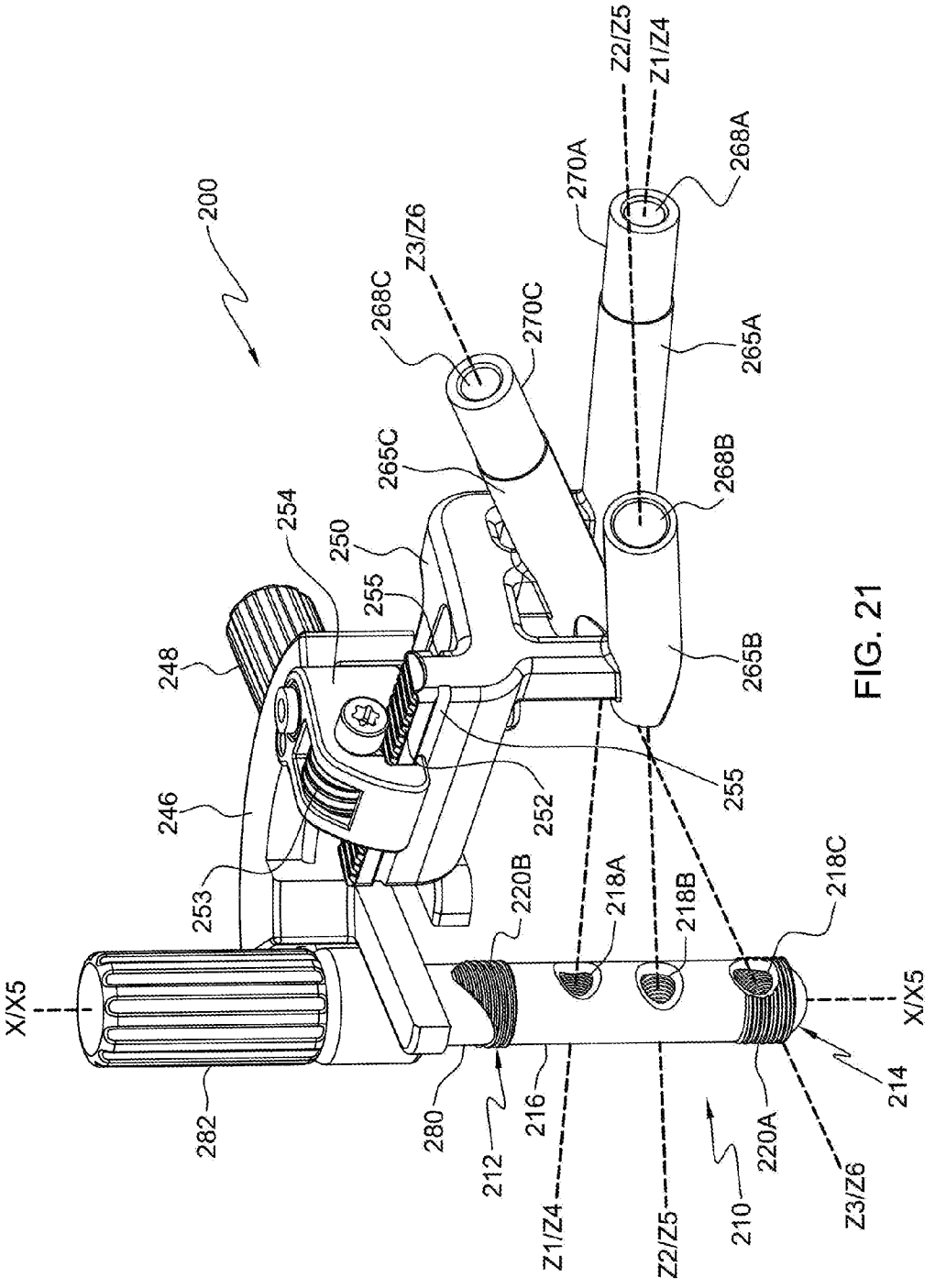
200
Z2/Z5
Z1/Z4
268A
270A
Z3/Z6
268C
270C
265A
265C
268B
254
250
255
248
265B
246
252
255
253
220B
218A
218B
218C
X/X5
X/X5
214
282
280
212
216
Z1/Z4
Z2/Z5
210
220A
Z3/Z6

FIG. 21

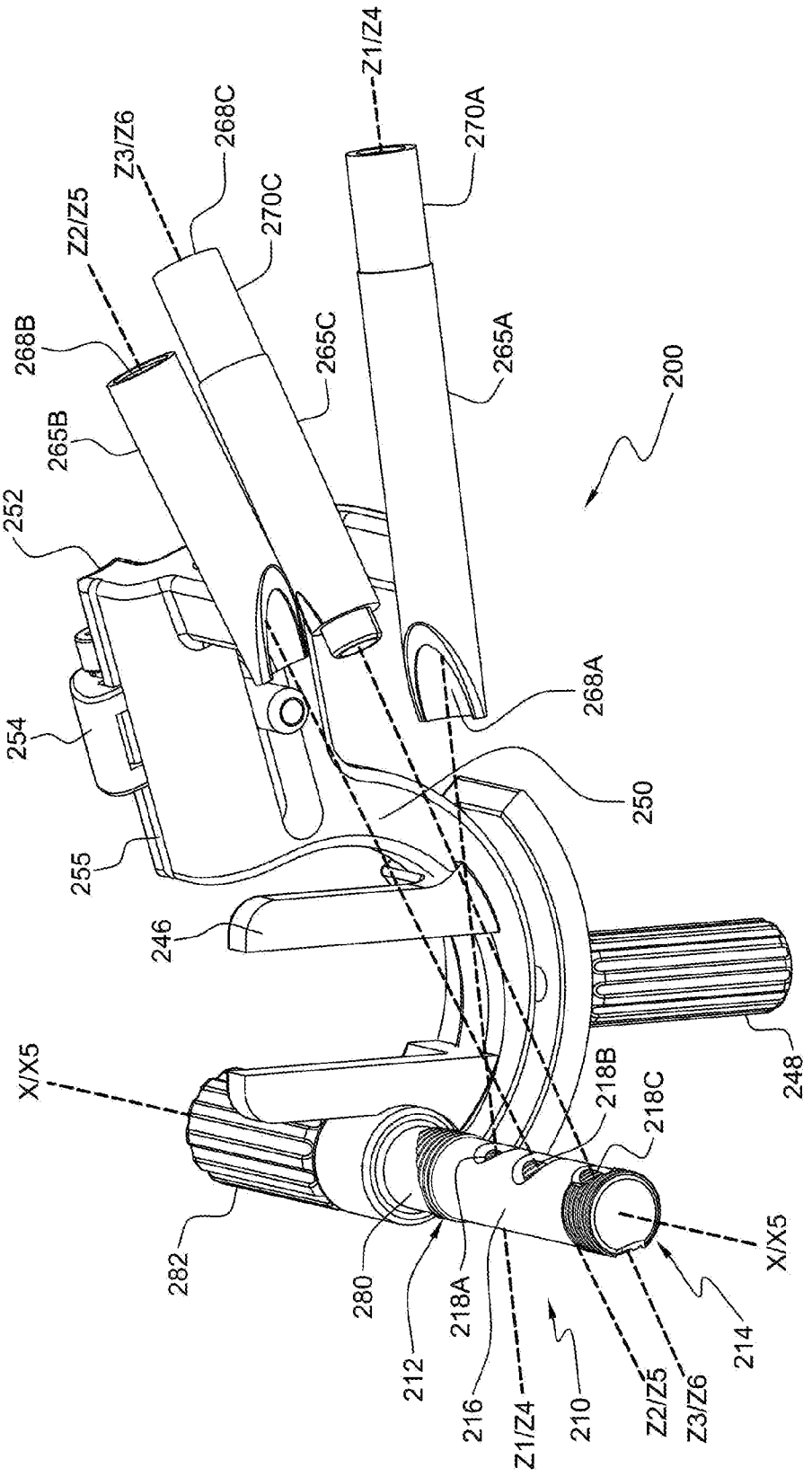
Z1/Z4
270A
268C
Z3/Z6
270C
Z2/Z5
268B
265C
265A
200
265B
252
254
268A
250
255
246
248
X/X5
218B
218C
282
280
218A
X/X5
214
212
216
Z1/Z4
210
Z2/Z5
Z3/Z6

FIG. 22

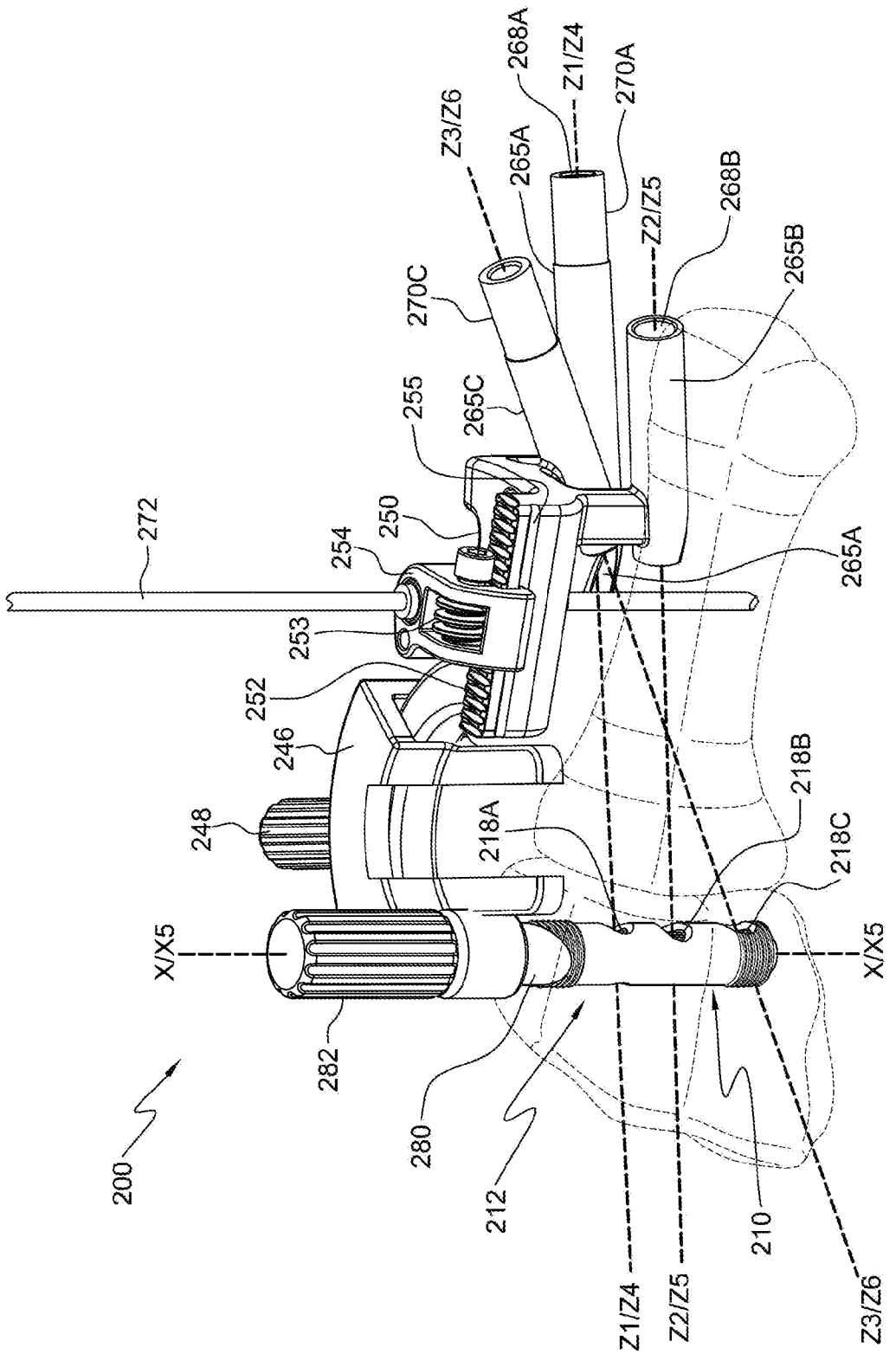
200
272
254
250
255
265C
270C
Z3/Z6
265A
268A
Z1/Z4
270A
Z2/Z5
268B
265B
265A
253
252
246
248
218A
218B
218C
X/X5
X/X5
282
280
212
210
Z1/Z4
Z2/Z5
Z3/Z6

FIG. 23

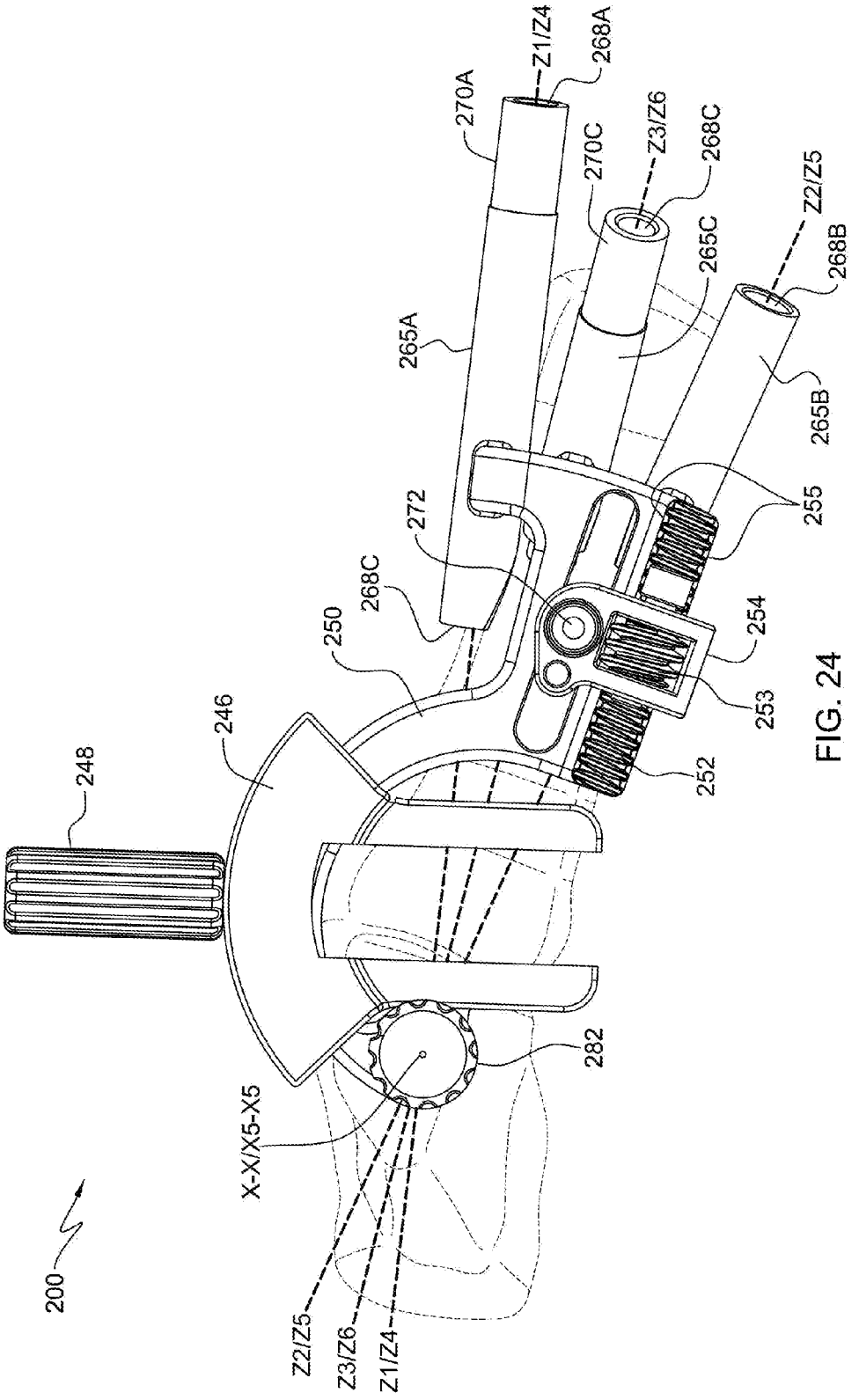
200
248
246
250
268C
272
270A
Z1/Z4
268A
270C
Z3/Z6
268C
265C
Z2/Z5
268B
265A
265B
255
254
253
252
282
X-X/X5-X5
Z2/Z5
Z3/Z6
Z1/Z4

FIG. 24

LOWER EXTREMITY FUSION DEVICES AND METHODS

FIELD OF THE INVENTION

[0001] The present invention relates to the field of fixation of anatomical structures, and, in particular, to devices, methods and instrumentation for facilitating bone fusion in a lower extremity of a patient.

BACKGROUND INFORMATION

[0002] In some instances bone fusion, or arthrodesis, of anatomy including multiple bone structures may be desirable, such as arthrodesis of the lower extremity bones of the ankle or foot. Foot or ankle arthrodesis is an established surgical technique to join or fuse adjacent bones in the foot or ankle by rigidly positioning them at their articular surfaces. By maintaining this placement, sometimes in the presence of a bone graft, bone cell growth or other anatomical growth may be stimulated which may cause the bones to fuse together. Once the bones are fixed to one another, all motion that existed at the corresponding joint surfaces of the bones ceases, stability is achieved and any pain caused by the irritation of corresponding nerves is significantly reduced or eliminated. For example, in certain patients with post-traumatic arthritis, rheumatoid arthritis, osteoarthritis, instability, complex or localized fractures or other injury, disease or destructive or painful conditions involving the bones of the foot or ankle, fusion of particular bones of the foot or ankle can alleviate resulting pain, discomfort and instability. Unfortunately, effective fusion of the foot or ankle which balances pain relief, joint stability and retention of some effective movement of the foot or ankle is rarely achieved, no less consistently achieved.

[0003] Several surgical approaches have been developed to maximize alleviation of foot or ankle pain and/or instability by arthrodesis. For example, total foot or ankle arthrodesis is very effective in relieving pain, but almost all foot or ankle motion is lost. Since the articulation afforded by the foot or ankle is important for mobility, strength and dexterity, such as during walking, running or the like, total foot or ankle arthrodesis is often thought of as a last resort. As another example, limited or partial foot or ankle arthrodesis is often desired in an effort to preserve motion of the foot or ankle to the greatest degree possible. Partial foot or ankle arthrodesis is fusion of a selected group of foot or ankle bones. Variations of the procedure, such as talus-tibia-fibia fusion (hereinafter "ankle fusion"), fibula-tibia fusion, calcaneus-cuboid fusion, talus-navicular fusion, navicular-cuneiform fusion, navicular-talus-cuboid-calcaneus fusion (hereinafter "triple arthrodesis"), cuneiform-metatarsal, tarsal-metatarsal fusion, metatarsal-phalanx fusion (hereinafter "MTP fusion"), and interphalangeal fusions, attempt to alleviate pain by fusing particular articulations determined or suspected of originating pain and/or instability. Partial foot or ankle arthrodesis is particularly advantageous in patients that desire full and uninhibited use of their foot or ankle because more residual motion of the foot or ankle can be preserved.

[0004] Currently, in both total and partial foot or ankle arthrodesis scenarios, it is common for plates, implants, wires, screws, staples and external fixation devices to be used as the fusion medium. These devices are used alone or in combination to attempt to achieve the desired level of fusion.

[0005] The placement and orientation of the bones of the foot or ankle at the time of a foot or ankle fixation is critical to obtaining a bony fusion, preserving maximal foot or ankle motion in partial fusion, and preventing, for example, progressive arthritis of the foot or ankle. One of the drawbacks encountered with prior art partial fusion devices, methods and instrumentation is that they fail to provide consistent and reproducible fusion, and therefore partial arthrodesis rarely results in full relief of pain. For example, when plates, implants, screws and the like are used to achieve partial foot or ankle fusion, the exact placement of the particular plate, implant or screws from surgeon to surgeon and patient to patient are rarely consistent. As such, the predictability of the exact clinical outcome of partial foot or ankle fusion with such prior art devices is low. As a result, there remains much room for improvement in the art for effective fusion devices, methods and instrumentation that provide reproducible alignment, orientation and configuration of the fusion medium with respect to target fixation bones in order to achieve predictable and consistent fusion of such target fixation bones.

[0006] Accordingly, it is an object of the present invention to overcome one or more of the above-described drawbacks and/or disadvantages of the prior art. For example, in view of the deficiencies of current designs of partial foot or ankle fusion devices and methods, and similar fusion devices and methods for other areas of the body where multiple bone structures exist including, but not limited to, the hand, wrist and spine, and the lack of proper associated devices, instrumentation and methods to achieve consistent post-operative results, it would be desirable to develop devices, instrumentation and methods to allow a surgeon to achieve satisfactory long term, predictable clinical outcomes for these types of fusion surgeries.

SUMMARY OF THE INVENTION

[0007] The present disclosure is directed to devices, instruments and methods for fusing, or facilitating fusion, of bones of a lower extremity.

[0008] In accordance with one aspect of the present invention, a fusion device for use with bones of a lower extremity is disclosed. In some embodiments, the fusion device includes a fusion implant configured for implantation into a cavity in at least one bone and at least two longitudinally extending bone fusion members. In some such embodiments, the fusion implant includes a first end including an attachment mechanism configured to couple with an instrument in a predefined first orientation, a second end substantially opposing the first end, and a body extending longitudinally between the first end and the second end and defining a longitudinal axis.

[0009] In some such embodiments, a first portion of the body is adjacent the first end and a second portion of the body is adjacent the second end. In some such embodiments, the first portion and second portion of the body includes exterior threading. In some such embodiments, the body further includes an intermediate portion between the first portion and the second portion including a non-threaded exterior surface.

[0010] In some such embodiments, the body includes at least two internally threaded apertures including a first thread lead extending laterally through the body. In some such embodiments, the at least two internally threaded apertures include a first threaded aperture proximate the first end and extending linearly from a first side surface to a second side surface of the medial portion and defining a first lateral axis,

and a second threaded aperture proximate the second end and extending linearly from a third side surface to a fourth side surface of the medial portion and defining a second lateral axis. In some such embodiments, the first side surface and the third side surface are spaced about the longitudinal axis of the body.

[0011] In some such embodiments, the at least two longitudinally extending bone fusion members include a tip, a head and a shank extending longitudinally between the tip and the head. In some such embodiments, the shank includes a first externally threaded portion, a second externally threaded portion, and a non-threaded portion.

[0012] In some such embodiments, the first externally threaded portion is positioned adjacent the tip and includes the first thread lead and is otherwise configured to couple to the at least two threaded apertures of the body of the fusion implant. In some such embodiments, the second externally threaded portion is adjacent the head and includes a second thread lead that is less than the first thread lead and an external taper extending from the head to the tip. In some such embodiments, the non-threaded portion extends between the first and second externally threaded portions.

[0013] In some embodiments, the first side surface and the third side surface of the body are spaced about the longitudinal axis of the body by at least about 10 degrees. In some embodiments, the first internally threaded aperture is oriented such that the first lateral axis angles away from the first end as it extends from the first side surface to the second side surface.

[0014] In some embodiments, the second internally threaded aperture is oriented such that the second lateral axis angles toward the second end as it extends from the third side surface to the fourth side surface. In some such embodiments, the first internally threaded aperture is oriented such that the first lateral axis angles toward the first end as it extends from the first side surface to the second side surface.

[0015] In some embodiments, the at least two internally threaded apertures further include a third internally threaded aperture positioned between the second internally threaded aperture and the second end. In some such embodiments, the third internally threaded aperture extends linearly from a fifth side surface to a sixth side surface and at least partially through the second threaded portion and defining a third lateral axis. In some such embodiments, the fifth side surface is spaced between the first side surface and the third side surface about the longitudinal axis of the body. In some such embodiments, the angle between the first lateral axis of the first internally threaded aperture and the longitudinal axis of the body adjacent the first side surface and first end of the body is within the range of about 77 degrees to about 94 degrees, the angle between the second lateral axis of the second internally threaded aperture and the longitudinal axis of the body adjacent the third side surface and first end of the body is within the range of about 69 degrees to about 83 degrees, and the angle between the third lateral axis of the third internally threaded aperture and the longitudinal axis of the body adjacent the third side surface and first end of the body is within the range of about 55 degrees to about 69 degrees.

[0016] In some embodiments, the first threaded portion and the non-threaded portion of the at least two bone fusion members define a first outer diameter, and the second threaded portion of the at least two bone fusion members defines a second outer diameter adjacent the head that is greater than the first outer diameter.

[0017] In accordance with another aspect of the present invention, a surgical instrument for use in obtaining fusion in a lower extremity of a patient is disclosed. In some such embodiments, the instrument includes a fusion implant, a frame member, an outrigger member, and at least one guide member.

[0018] In some such embodiments, the fusion implant includes a first end, a second end and a body extending longitudinally therebetween defining a first axis. In some such embodiments, the body includes external threading adjacent the first end and second end and at least one internally threaded laterally extending bone fusion member aperture defining a second axis.

[0019] In some such embodiments, the frame member includes at least one arm and a translatable bone anchor carriage member including an aperture configured to receive a bone anchor therein. In some such embodiments, the translatable bone anchor carriage member is configured to translate a bone anchor received within the aperture with respect to the fusion implant.

[0020] In some such embodiments, the outrigger member is coupled to the at least one arm of the frame member and is securely removably coupled to the first end of the fusion implant in a first orientation of the fusion implant.

[0021] In some such embodiments, the at least one guide member is coupled to the at least one arm of the frame member and includes an aperture extending through the at least one guide member and defines a third axis.

[0022] In some such embodiments, the outrigger member and the at least one guide member are configured such that the second axis of the bone fusion member aperture of the fusion implant and the third axis of the aperture of the at least one guide member are substantially aligned in the first orientation of the fusion implant.

[0023] In some embodiments, the at least one arm of the frame member includes at least a first arm extending from the frame member to the outrigger member, and a second arm extending from the frame member to the at least one guide member. In some such embodiments, the first arm and the second arm are configured to fixedly space the outrigger member and the at least one guide member from each other along the first axis of the fusion implant and along the third axis of the aperture of the at least one guide member. In some such embodiments, a resection guide is selectively slidably coupled to the first arm. In some such embodiments, resection guide includes two linear parallel spaced resection guide surfaces. In some such embodiments, the first arm is configured to position the resection guide surfaces of the resection guide above the third axis of the aperture of the at least one guide member and between the at least one guide member and the fusion implant.

[0024] In some embodiments, the outrigger member and the first end of the fusion implant are configured to be securely removably coupled to one another in only the first orientation. In some embodiments, the outrigger member and the first end of the fusion implant are configured to provide a visual or tactile indication when they are coupled to one another in an orientation different than the first orientation.

[0025] In some embodiments, the frame member includes a carriage rail including external threading and a slot extending through the carriage rail and the frame member adjacent to the external threading. In some such embodiments, the bone anchor carriage member is slidably coupled to the carriage rail, and the aperture of the carriage member is aligned with

the slot of the carriage rail and frame member. In some such embodiments, the carriage member includes an externally threaded rotatable member threadably engaged with the external threading off the carriage rail such that rotation of the externally threaded rotatable member slidably translates the carriage member along the carriage rail and the aperture of the carriage rail along a length of the slot of the carriage rail and frame member.

[0026] In accordance with another aspect of the present invention, a surgical guide instrument for use in preparing a bone for a fusion device for obtaining bone fusion in a lower extremity of a patient is disclosed. In some such embodiments, the instrument includes a based member, a distal positing tab, and a lateral positioning tab.

[0027] In some such embodiments, the base member defines a top surface and an opposing dorsal abutment surface configured to engage a dorsal surface of a first target bone. In some such embodiments, the base member includes a longitudinally extending aperture extending through an intermediate portion of the base member configured to accept a bone anchor therethrough. In some such embodiments, the longitudinally extending aperture defines a longitudinal axis.

[0028] In some such embodiments, the distal positioning tab extends from a distal portion of the dorsal abutment surface of the base member and includes a distal abutment surface configured to engage a distal surface of the first target bone. In some such embodiments, the distal abutment surface is distally spaced from the longitudinal axis of the longitudinally extending aperture of the base member.

[0029] In some such embodiments, the lateral positioning tab extends from a lateral portion of the dorsal abutment surface of the base member and includes a lateral abutment surface configured to engage a lateral surface of the first target bone. In some such embodiments, the lateral abutment surface is laterally spaced from the longitudinal axis of the longitudinally extending aperture of the base member.

[0030] In some such embodiments, the distal spacing of the distal positioning tab and the lateral spacing of the lateral positioning tab from the longitudinal axis of the longitudinally extending aperture positions the longitudinal axis of the longitudinally extending aperture in an intermediate position of the first target bone with respect to the in the medial-lateral and distal-proximal directions when the dorsal abutment surface is in abutment with a dorsal surface of a first target bone, the lateral abutment surface is in abutment with a lateral surface of a first target bone, and the distal abutment surface is in abutment with a distal surface of a first target bone.

[0031] In some such embodiments, the base member includes a resection slot extending in a medial-lateral direction and proximally spaced from the distal abutment surface of the distal positioning tab. In some such embodiments, the resection slot facilities resection of a distal portion of the first target bone when a bone anchor is received within the longitudinally extending aperture of the base member and the first target bone.

[0032] In accordance with another aspect of the present invention, a surgical method for fusing bones is disclosed. In some such embodiments, the method includes the step of drilling an implant aperture extending at least partially through a first bone.

[0033] In some such embodiments, the method further includes removably coupling a first end of a fusion implant including at least one internally threaded bone fusion member aperture including a first thread lead to a surgical instrument in a first predefined orientation dictated by the configuration of at least one of the first end of the fusion implant and the surgical instrument.

[0034] In some such embodiments, the method further includes rotatably inserting the fusion implant within the implant aperture at least partially through the first bone such that the at least one internally threaded bone fusion member aperture is positioned within the first bone and external threading of the fusion implant is engaged with the first bone.

[0035] In some such embodiments, the method further includes coupling a first portion of a first bone anchor to a bone anchor carriage member that is translatably coupled to the surgical instrument and coupling a second portion of the first bone anchor to a second bone that is disposed adjacent the first bone to couple the carriage member and the second bone to the first bone anchor.

[0036] In some such embodiments, the method further includes translating the bone anchor carriage member in a first direction to translate the second bone away from the first bone to distract the joint between the first bone and second bone.

[0037] In some such embodiments, the method further includes translating the bone anchor carriage member in a second direction that opposes the first direction to translate the second bone into contact with the first bone such that adjacent prepared surfaces of the first bone and second bone are compressed against each other.

[0038] In some such embodiments, the method further includes positioning a first elongated aperture defining a first axis provided on the surgical instrument proximate the second bone.

[0039] In some such embodiments, the method further includes positioning a drill bit within the first elongated aperture provided on the surgical instrument and drilling along the first axis to form a bone fusion member aperture extending through the second bone and at least partially through the first bone to at least the at least one internally threaded bone fusion member aperture of the fusion implant.

[0040] In some such embodiments, the method further includes rotationally inserting a first bone fusion member including a first externally threaded portion including the first thread lead adjacent a tip of the member and a second externally threaded portion of a second thread lead that is less than the first thread lead adjacent a head of the member into the bone fusion member aperture such that the first externally threaded portion is threadably engaged with the at least one internally threaded bone fusion member aperture, the second externally threaded portion is engaged with the second bone, and the fusion implant and the first bone fusion member apply a compressive force to the joint between the adjacent prepared surfaces of the first bone and the second bone to facilitate fusion therebetween.

[0041] In some embodiments, the step of drilling an implant aperture includes the steps of abutting a dorsal abutment surface of a surgical guide against a dorsal surface of the bone, abutting a lateral abutment surface of the surgical guide against a lateral surface of the first bone, and abutting a distal abutment surface of the surgical guide against a distal surface of the first bone. In some such embodiments, the step of drilling an implant aperture further includes the step of inserting a second bone anchor through an aperture of the guide member that is spaced in a plantar direction from the dorsal abutment surface, spaced in medial direction from the lateral abutment surface, and spaced in proximal direction from the

distal abutment surface, into a portion of the first bone member that is intermediate in the medial-lateral and distal-proximal directions. In some such embodiments, the step of drilling an implant aperture further includes the step of removing the surgical guide from the first bone and the second bone anchor. In some such embodiments, the step of drilling an implant aperture further includes the step of drilling along the second bone anchor with a cannulated drill bit to form the implant aperture in an intermediate portion of the first bone in the medial-lateral and distal-proximal directions. In some such embodiments, the step of drilling an implant aperture further includes the step of removing the second bone anchor from the first bone.

[0042] In some embodiments, the surgical method includes the step of utilizing a slot provided in the surgical guide to resect a portion of the first bone to form a substantially planar prepared bone surface adjacent the second bone after the second bone anchor is inserted into the first bone. In some such embodiments, the surgical method further includes the step of utilizing a resection guide surface of a resection guide provided on the surgical instrument to resect a portion of the second bone to form a substantially planar prepared bone surface adjacent the first bone after the after the joint between the first bone and second bone is distracted.

[0043] Other objects, aspects and advantages of the fusion devices and methods of the present invention, and/or of the currently preferred embodiments thereof, will become more readily apparent in view of the following detailed description of the currently preferred embodiments and the accompanying drawings.

BRIEF DESCRIPTION OF THE DRAWINGS

[0044] FIG. **1** is a front elevational perspective view of an exemplary embodiment of a fusion implant of the present invention;

[0045] FIG. **2** is a rear elevational perspective view of the fusion implant of FIG. **1**;

[0046] FIG. **3** is a rear side view of the fusion implant of FIG. **1**;

[0047] FIG. **4** is a front view of the fusion implant of FIG. **1**;

[0048] FIG. **5** is a first side view of the fusion implant of FIG. **1**;

[0049] FIG. **6** is a second side view of the fusion implant of FIG. **1**;

[0050] FIG. **7** is a longitudinal side view of the fusion implant of FIG. **1**;

[0051] FIG. **8** is a first cross-sectional side view of the fusion implant of FIG. **1** as indicated in FIG. **7**;

[0052] FIG. **9** is a second cross-sectional side view of the fusion implant of FIG. **1** as indicated in FIG. **7**;

[0053] FIG. **10** is a third cross-sectional side view of the fusion implant of FIG. **1** as indicated in FIG. **7**;

[0054] FIG. **11** is a fourth cross-sectional side view of the fusion implant of FIG. **1** as indicated in FIG. **7**;

[0055] FIG. **12** is a rear elevational perspective view of a first exemplary embodiment of a fusion member of the present invention;

[0056] FIG. **13** is a front elevational perspective view of the fusion implant of FIG. **12**;

[0057] FIG. **14** is a side view of the fusion implant of FIG. **12**;

[0058] FIG. **15** is a rear elevational perspective view of an exemplary embodiment of a fusion device of the present invention;

[0059] FIG. **16** is a first side view of the fusion device of FIG. **15**;

[0060] FIG. **17** is a first side view of the fusion device of FIG. **15** implanted in exemplary bones of a lower extremity;

[0061] FIG. **18** is a longitudinal side view of the fusion implant of FIG. **15** implanted in the exemplary bones of a lower extremity of FIG. **16**;

[0062] FIG. **19** is a front elevational perspective view of an exemplary embodiment of a first surgical instrument of the present invention;

[0063] FIG. **20** is a front side view of the first surgical instrument of FIG. **19**;

[0064] FIG. **21** is a rear elevational perspective view an exemplary embodiment of a second surgical instrument of the present invention;

[0065] FIG. **22** is a bottom elevational perspective view of the second surgical instrument of FIG. **21**;

[0066] FIG. **23** is a rear elevational perspective view the second surgical instrument of FIG. **21** partially implanted in exemplary bones of a lower extremity; and

[0067] FIG. **24** is a bottom elevational perspective view of the second surgical instrument of FIG. **21** partially implanted in the exemplary bones of a lower extremity of FIG. **23**.

DETAILED DESCRIPTION

[0068] In this application, the words proximal, distal, anterior or plantar, posterior or dorsal, medial and lateral are defined by their standard usage for indicating a particular part or portion of a bone or prosthesis coupled thereto, or directional terms of reference, according to the relative disposition of the natural bone. For example, "proximal" means the portion of a bone or prosthesis nearest the torso, while "distal" indicates the portion of the bone or prosthesis farthest from the torso. As an example of directional usage of the terms, "anterior" refers to a direction towards the front side of the body, "posterior" refers to a direction towards the back side of the body, "medial" refers to a direction towards the midline of the body and "lateral" refers to a direction towards the sides or away from the midline of the body. Further, specifically in regards to the foot or ankle, the term "dorsal" refers to the top of the foot or ankle and the term "plantar" refers the bottom of the foot or ankle.

[0069] Similarly, positions or directions may be used herein with reference to anatomical structures or surfaces. For example, as the current devices, instrumentation and methods are described herein with reference to use with the bones of the foot or ankle, the bones of the foot, ankle and lower leg may be used to describe the surfaces, positions, directions or orientations of the devices, instrumentation and methods. Further, the devices, instrumentation and methods, and the aspects, components, features and the like thereof, disclosed herein are described with respect to one side of the body for brevity purposes. However, as the human body is relatively symmetrical or mirrored about a line of symmetry (midline), it is hereby expressly contemplated that the devices, instrumentation and methods, and the aspects, components, features and the like thereof, described and/or illustrated herein may be changed, varied, modified, reconfigured or otherwise altered for use or association with another side of the body for a same or similar purpose without departing from the spirit and scope of the invention. For example, the devices, instru-

mentation and methods, and the aspects, components, features and the like thereof, described herein with respect to the left foot or ankle may be mirrored so that they likewise function with the right foot or ankle.

[0070] In FIGS. **1-10**, a fusion implant embodying a first embodiment is indicated generally by the reference numeral **10**. As shown in FIGS. **1-10**, the fusion implant **10** may be a post-like member. The exemplary illustrated fusion implant **10** is a substantially cylindrical member having a substantially circular cross-sectional geometry of constant thickness. In alternative embodiments, the fusion implant **10** may define a non-cylindrical shape or any other geometrical shape and thicknesses (constant or varying).

[0071] As shown in the perspective views of FIGS. **1** and **2**, the exemplary illustrated fusion implant **10** includes an exemplary first end or tip **12** and a substantially opposing exemplary second end **14**. A body **16** of the fusion implant **10** extends between the first end **12** and the second end **14** and defines a longitudinal axis X-X. In the illustrated embodiments, the longitudinal axis X-X of the body **16** defines the longitudinal axis of the fusion implant **10**. In alternative embodiments, the longitudinal axis X-X of the body **16** differs from the longitudinal axis of the fusion implant **10**.

[0072] The body **16** is of a generally cylindrical shape, and defines a first external threaded portion **20**A adjacent the first end **12**, a second external threaded portion **20**B adjacent the second end **14**, and a substantially smooth non-threaded outer surface portion **26** extending between the first threaded portion **20**A and the second threaded portion **20**B. In some embodiments, the fusion implant **10** and the body **16** define a non-cylindrical shape and thickness (constant or varying). In some embodiments, the outer surface of the implant **10** includes at least one of external threads at only one end, external threads only in an intermediate portion, an outer surface void of threads, and a macro, micro or nano texture or structure. For example, in one embodiment the non-threaded portion **26** includes at least one of macro, micro or nano texture or structure.

[0073] The external threading of the first and second external threaded portions **20**A, **20**B of the body **16** may be any thread configuration. For example, the threading of the first and second external threaded portions **20**A, **20**B may include coarse thread, fine thread, single start, multiple start, variable or contestant pitch, standard thread profiles, tapered threads, ISO standard threads, other standard threads or the like. In some embodiments, at least one characteristic of the threading of the first and external threaded portions **20**A, **20**B differs. In the illustrated embodiment, the threading of the first and second external threaded portions **20**A, **20**B is substantially identical, and defines a thread pitch of about 0.03 inch. In some embodiments, the threading of the first and second external threaded portions **20**A, **20**B includes a 60 degree stub thread profile with a base width of about 0.02 inch, and a crest width of about 0.009 inch and a height of about 0.0093 inch. The threading of the first and second external threaded portions **20**A, **20**B may facilitate insertion of the fusion implant **10** in an implant cavity in a bone and/or couple the fusion implant **10** within such implant cavity. As such, the entire outer surface of the body **16** may include threading (i.e., non-threaded portion **26** may include threading).

[0074] The apertures of the body **16** may include internally threaded and non-threaded apertures extending through, or partially through, the body **16** at different locations and angles or orientations. For example, some apertures may define an axis that passes through the longitudinal axis X-X, while other apertures may define an axis that is spaced from the longitudinal axis X-X. The apertures may also define any shape or size, such as circular and non-circular apertures, and may extend linearly or non-linearly through, or partially through, the body **16**. The number of the internally threaded and non-threaded apertures may also vary, such as a body **16** including at least one threaded aperture and not including any non-threaded apertures, or a body **16** including at least one threaded aperture and at least one non-threaded aperture. In some embodiments, the body **16** includes at least two threaded apertures. In some such embodiments, the body **16** includes only two threaded apertures. In other such embodiments, the body includes three threaded apertures.

[0075] In the illustrated embodiment, the exemplary body **16** includes three exemplary internally threaded apertures **18**A-C each defining axes. A first internally threaded aperture **18**A is provided adjacent the first end **12**, second a internally threaded aperture **18**B is provided in a intermediate portion of the body **16**, and a third internally threaded aperture **18**C is provided adjacent the second end **14**. However, one of the internally threaded apertures **18**A-C may not be provided in the body **16**, and such two-aperture fusion implant embodiments may be advantageous for certain clinical situations. As such, any embodiments described herein as including more than two internally threaded apertures **18**A-C may equally be employed with only two of the internally threaded apertures **18**A-C, and such two-aperture embodiments (and thus two fusion member embodiments) are hereby specifically contemplated. For example, in some such embodiments the third internally threaded aperture **18**C may not be provided (and therefore a third fusion member **50**C may not be provided).

[0076] The exemplary internally threaded apertures **18**A-C extend substantially linearly entirely through the body **16** and pass substantially through the longitudinal axis X-X (i.e., the apertures **18**A-C pass through the entire thickness of the body **16**). The exemplary internally threaded apertures **18**A-C define the same substantially circular cross-section, and thus are substantially cylindrical in nature and identical is shape and size. The internally threaded apertures **18**A-C may include internal threads extending substantially along the entire length of the apertures **18**A-C, or the threading may extend or only a portion of the length of the apertures **18**A-C. In the illustrated embodiment, the entire length or thickness of the internally threaded apertures **18**A-C includes internal threading (see FIGS. **8-10**). In alternative embodiments, each of the apertures **18**A-C is not threaded and defines substantially straight and smooth surfaces.

[0077] As shown best in FIGS. **3** and **4**, the first end **12** of the fusion implant **10** defines an exemplary tip profile with an asymmetrical or skewed shape with respect to at least one plane passing through the longitudinal axis X-X of the body **16**. As described in further detail below, the first end **12** is configured asymmetric or skewed with respect to at least one plane so that the fusion implant **10** properly mates or couples with an instrument in a predefined first orientation so that a specific, predefined alignment between the fusion implant **10** and the instrument is consistently achieved (as well as the orientation of the fusion implant **10** with respect to target fixation bones). For example, the first end **12** (and/or the instrument) may be configured so that it can only mate or couple with an instrument in the predefined first orientation. As another example, the first end **12** may be configured such that it is capable of mating or coupling with an instrument in

multiple orientations, including the first orientation, but provides a visual, tactile or other indication when the fusion implant **10** is mated or coupled in an orientation other than the first orientation. For example, the first end **12** (and/or the instrument) may include visual or tactile markings, members, shapes or the like that provide at least one visual or tactile indication for facilitating mating or coupling the fusion implant **10** in the first orientation.

[0078] As shown in FIGS. **3-6**, the exemplary first end **12** of the illustrated fusion implant **10** includes four exemplary planar surfaces extending from the outer surface of the body **16** toward the longitudinal axis X-X. Two of the exemplary surfaces extending from the outer surface of the body **16** at acute angles toward the longitudinal axis X-X. As best shown in FIGS. **3-6**, the first end **12** includes an exemplary first planar tip surface **22** extending from a lateral portion of the outer surface of the body **16** and an exemplary second planar tip surface **24** extending from an opposing intermediate portion of the outer surface of the body **16**. As illustrated in the medial and lateral side views of FIGS. **3** and **4**, the first and second tip surfaces **22**, **24** extend from the medial and lateral outer surface portions of the body **16**, respectively, linearly toward the outer surface of the body **16** at an angle θ**1**. As the outer surface of the exemplary body **16** is cylindrical and formed about the longitudinal axis X-X, the first and second tip surfaces **22**, **24** also extend from their respective outer surface portions at the angle θ**1** with respect to the longitudinal axis X-X. In the illustrated embodiment, the first and second tip surfaces **22**, **24** are planar and extend from opposing sides of the body **16** at angle θ**1** of about 45 degrees from outer surfaces of the body **16** and with respect to the longitudinal axis X-X, and therefore extend substantially perpendicular to each other. As such, in the illustrated embodiment, the edges formed by the outer surface of body **16** and the first and second tip surfaces **22**, **24** (i.e., the outer edges of the first and second tip surfaces **22**, **24**) are concaved towards the intermediate portion of the body **16**.

[0079] The exemplary second tip surface **24** extends from a more intermediate (or plantar) portion of the body **16** as compared to the intermediate (or plantar) portion of the body **16** from which the first tip surface **22** extends. However, the first and second tip surfaces **22**, **24** extend to the same longitudinal position along the longitudinal axis X-X. As such, the total length of the second tip surface **24** measured from the most intermediate (or plantar) point to the outer most point (or most dorsal) is greater than the corresponding length of the first tip surface **22** (whether measured along the longitudinal axis X-X or along respective planes defined by the surfaces **22**, **24**). As described above, and further described below, the difference in the total lengths of the first and second tip surfaces **22**, **24** allows a user to accurately and consistently couple the fusion implant **10** with an instrument in the pre-defined first orientation.

[0080] As also illustrated in the side views of FIGS. **3** and **4**, the exemplary illustrated first end **12** further includes exemplary third and fourth tip surfaces **26** extending from the portions of the outer surface of the body **16** between the first and second **22**, **24** tip surfaces toward the longitudinal axis X-X of the body **16**. The exemplary third and fourth tip surfaces **26** intersect, and extend between, the first and second tip surfaces **22**, **24**. Each of the third and fourth tip surfaces **26** extends substantially perpendicular to the longitudinal axis X-X of the body **16**, and defines the outer most surface of the fusion implant **10** at the first end **12**. In the illustrated embodiment, the third and fourth tip surfaces **26** are of identical shape, size, orientation and longitudinal position along the axis X-X. Due to the configuration of the first and second tip surfaces **22**, **24**, as described above, the third and fourth tip surfaces **26** are not opposed from each other about the longitudinal axis X-X of the body **16**, but rather are skewed towards the top (or lateral) portion of the body **16**. As described below, this skewed or off-center configuration ensures that the fusion implant **10** will be coupled to an instrument in a pre-defined orientation. As such, the features of the fusion implant **10** can be designed with respect the pre-defined orientation.

[0081] This skewed relationship or configuration of the first end **12** limits the orientations in which the first end **12** of the fusion member **10** can be coupled to an instrument including a reversed or mirrored configuration of the first end **12**, as described further below. For example, an instrument including a reversed or mirrored configuration of the first end **12** will be capable of properly or securely coupling to the first end **12** of the fusion member **12** in only two predefined orientations, because of the "V" shape. One of the predefine orientations being a "proper" orientation and the other being "improper." Further, the off-center orientation of the aspects of the first end **12** will provide a visual or tactile indication when the fusion implant **10** is coupled to the instrument in the "improper" orientation. In this way, the aspects of the "proper" orientation of the fusion member **10** can be predetermined and designed for a specific fusion application, since the first end **12** ensures the fusion member **10** will be orientated in the "proper" orientation.

[0082] As shown in FIG. **1**, and described further below with respect to FIGS. **7-10**, the first end **12** further includes an aperture **40** extending from the first, second, third and fourth **22**, **24**, **26** tip surfaces towards an intermediate portion of the body **16** about the longitudinal axis X-X. The axially extending aperture **40** thereby forms the inner edges of the first and second tip surfaces **22**, **24** and the third and fourth **26** tip surfaces. As a result, in the illustrated embodiment, the inner edges of the first, second, third and fourth **22**, **24**, **26** are curved about the longitudinal axis X-X with the radius of curvature of the axially extending aperture **40**. Also, the inner edges of the first and second tip surfaces **22**, **24** formed by the axially extending aperture **40** are concaved towards the intermediate portion of the body **16**. As the outer edges of the first and second tip surfaces **22**, **24** are also concaved, as discussed above, the profile of the first end **12** of the body **16** is concaved towards the intermediate portion of the body **16** when viewed from the medial and lateral portions of the body **16** (see FIGS. **5** and **6**).

[0083] The second end **14** of the fusion implant **10** and body **16** substantially opposes the first end **12**, as shown in FIGS. **1-8**. The second end **14** may include any configuration or shape. In the illustrated embodiment, as best shown in FIGS. **2-6**, the second end **14** includes a radiused second end surface **30** that extends out from the body **16** at the second end **14** (i.e., the surface is convex). In some embodiments, the center of curvature of the radiused end surface **30** is substantially aligned with longitudinal axis X-X of the body **16**. The second end surface **30** defines the outer most surface (or most dorsal surface) of the fusion implant **10** at the second end **14**. As such, the blunt profile provided by the curvature of the second end surface **30** may minimize soft tissue irritation or other damage during implantation of the fusion member **10**. In alternative embodiments, the second end **14** includes a

planar end surface. In the illustrated embodiment, the second end surface **14** also includes a circumferential edge **32** extending between the second threaded portion **20**B and the second end surface **30**. In alternative embodiments, the second end **14** does not include the circumferential edge **32**, and the second end surface **30**, whatever its configuration or shape, extends directly to the outer surface of the body **16**.

[0084] As illustrated in FIG. **3**, the total axial length L**1** of the fusion implant **10** along the longitudinal axis X-X can be measured from the first end surfaces **28** of the first end **12** to the second end surface **30** of the second end **14**. The outer or major diameter D**1** of the body **16** (and therefore the diameter of the fusion implant **10**) and can be measured from opposing sides of the first or second threaded portions **20**A, **20**B, and the inner or minor diameter D**2** of the body **16** (and therefore the diameter of the fusion implant **10**) and can be measured from opposing sides of the non-threaded portion **26**. The axial length L**1**, major diameter D**1** and minor diameter D**2** of the fusion implant **10** may vary and depend upon, or at least be related to, the particular target fusion bones. For example, in the illustrated embodiment the fusion implant **10** is particularly well suited for implantation into the medial or transverse cuneiform bone for fusion of the first metatarsal bone thereto (i.e., 1st TMT fusion), and defines an axial length L**1** of about 1.3 inches, a major diameter D**1** of about 0.29 inch and a minor diameter D**2** of about 0.28 inch. In some 1st TMT embodiments, the axial length L**1** of the body **16** and implant **10** is about 32 millimeters, and the major diameter D**1** of the body **16** and implant **10** is about 7 millimeters. In some 1st TMT embodiments of the implant **10**, the axial length L**1** of the fusion implant **10** may preferably range from about 0.9 inch to about 1.3 inches, and more preferably from about 0.94 in to about 1.26 inches. Further, in some such embodiments, the axial length L**1** of the fusion implant **10** may range in about 0.16 inch increments. As such, an exemplary fusion kit may include a plurality of fusion implants **10** of differing axial lengths L**1**, such as a kit including fusion implants **10** of axial lengths from about from 0.9 inch to about 1.3 inches in about 0.16 inch increments. In some such embodiments, the kit further includes at least one fusion member configured to couple to the fusion implants.

[0085] However, the axial length L**1** of the fusion implant **10**, as well as the major and minor diameters D**1** and D**2** of the fusion implant **10**, may depend upon, or at least be related to, a particular clinical need, injury, patient size or the like, and therefore fusion implants **10** including axial lengths L**13** outside the ranges presented above may be desirable. Also, the major and minor diameters D**1** and D**2** of the fusion implant **10** may further vary depending upon the length of the fusion implant **10**. As an example, in some implant **10** embodiments particularly well suited for triple arthrodesis, the axial length L**1** of the fusion implant **10** may be about 1.2 inch, and the major D**1** and/or minor D**2** diameter of the fusion implant **10** may be about 0.5 inch. In one such triple arthrodesis embodiment, the axial length L**1** of the fusion implant **10** is about 30 millimeters, and the major D**1** and/or minor D**2** diameter of the fusion implant **10** is about 12 millimeters. As another example, in some implant **10** embodiments particularly well suited for MTP fusion, the axial length L**1** of the fusion implant **10** may be about 0.9 inch, and the major D**1** and/or minor D**2** diameter of the fusion implant **10** may be about 0.2 inch. In one such MTP fusion embodiment, the axial length L**1** of the fusion implant **10** is about 24 millimeters, and the major D**1** and/or minor D**2** diameter of the fusion implant **10** is about 6 millimeters. As yet another example, in some implant **10** embodiments particularly well suited for ankle fusion, the axial length L**1** of the fusion implant **10** may be about 1.4 inches, and the major D**1** and/or minor D**2** diameter of the fusion implant **10** may be about 0.4 inch. In one such ankle fusion embodiment, the axial length L**1** of the fusion implant **10** is about 36 millimeters, and the major D**1** and/or minor D**2** diameter of the fusion implant **10** is about 10 millimeters.

[0086] As shown in the front and rear side (or distal and proximal) views of FIGS. **3** and **4**, the threaded apertures **18**A-C may be countersunk into the body **16** at the front (or distal) portion of the fusion implant **10** (FIG. **3**) and flush with the outer surface of the body **16** at the rear (or proximal) portion of the fusion implant **10** (FIG. **4**). The countersink of the threaded apertures **18**A-C may include respective conical-like grooves **36**A-C about each threaded aperture **18**A-C extending from the outer surface of the body **16** to the threaded apertures **18**A-C. The grooves **36** may be of an oblong or other non-circular shape because such grooves **36** may be formed in the body **16** on an angle with respect to the outer surface of the body **16**, and thus the longitudinal axis X-X as well (i.e., the axis of the grooves **36** not being formed normal to the outer surface of the body **16**). In one embodiment, the grooves **36** are angled about 45 degrees from the outer surface of the body **16**. In the illustrated embodiment, the angled axis of the grooves **36** is substantially aligned with the axis of the threaded apertures **18**A-C. The grooves **36** may act to guide or reposition a fusion member, such as a bone screw, that is not aligned and/or oriented with the position and orientation of the threaded apertures **18**A-C into proper alignment and/or orientation therewith so the fusion member can engage the internal threads. As such, grooves **36** that define axes substantially aligned with the axes of the internally threaded apertures **18**A-C may be particularly advantageous. The grooves **36** may or may not be considered part of the internally threaded apertures **18**A-C.

[0087] As shown in FIGS. **1-6**, the internally threaded apertures **18**A-C of the fusion implant **10** of the illustrated embodiment are axially spaced along the longitudinal axis X-X of the body **16**. As further seen from FIGS. **1-6**, the illustrated internally threaded apertures **18**A-C of the fusion implant **10** also pass through different sides of the body **16** such that the threaded apertures **18**A-C are spaced about the body **16** and the longitudinal axis X-X defined thereby. The particular axial spacing (or dorsal-plantar spacing) along the longitudinal axis X-X, in combination with the angular spacing about the body **16** and longitudinal axis X-X, of the threaded apertures **18**A-C of the fusion implant **10** may depend upon the particular target bones. For example, some target bones may dictate that the threaded apertures **18**A-C (and therefore the fusion members coupled thereto) be relatively spread out along the longitudinal axis X-X (i.e., relatively large spacing between adjacent apertures). As another example, some target bones may dictate that the threaded apertures **18**A-C be relatively condensed along the longitudinal axis X-X (i.e., relatively small spacing between adjacent apertures). Still further, some target bones may dictate that two of the threaded apertures **18**A-C be positioned relatively close to one another, while the third being spaced therefrom a relatively large distance. Similarly, the angular relationship of the apertures **18**A-C about the body **16** and longitudinal axis X-X may be dependent or dictated by the particular geometry of the target bones.

[0088] As shown best in FIGS. **1-4** and **7**, the applicants have determined that a fusion implant **10** including at least two internally threaded apertures **18**A, **18**B that are longitudinally spaced along the longitudinal axis X-X of the body **16**, angularly spaced about the longitudinal axis X-X, and/or angularly oriented with respect to the longitudinal axis X-X, is particularly advantageous for facilitating fusion in the lower extremities. The applicants have also determined that a fusion implant **10** including three internally threaded apertures **18**A-C that are spaced both longitudinally and angularly about the longitudinal axis X-X of the body **16**, and/or angularly oriented with respect to the longitudinal axis X-X, is particularly advantageous for facilitating fusion in several bones of the foot and ankle.

[0089] As such, the illustrated exemplary fusion implant **10**, as shown in FIGS. **5** and **6**, includes a first internally threaded aperture **18**A adjacent the first end **12** defining a first lateral axis Z**1**-Z**1**, a second internally threaded aperture **18**B in a intermediate portion of the body **16** defining a second lateral Z**2**-Z**2**, and a third internally threaded aperture **18**C adjacent the second end **14** defining a third lateral axis Z**3**-Z**3**. As the exemplary internally threaded apertures **18**A-C are circular or cylindrical, the internally threaded apertures **18**A-C are formed about the respective axes Z**1**-Z**1**, Z**2**-Z**2** and Z**3**-Z**3**. As shown best in FIGS. **1-4** and **7**, the internally threaded apertures **18**A-C are spaced from one another along the longitudinal axis X-X of the body **16** and are oriented such that they pass through different outer surfaces of the body **18** (i.e., spaced both longitudinally and angularly about the longitudinal axis X-X of the body **16**).

[0090] As shown in the end view of FIG. **7**, when viewed along the longitudinal axis X-X from the first end **12**, the angular direction of each internally threaded apertures **18**A-C can be seen and represented by their respective axes Z**1**-Z**1**, Z**2**-Z**2** and Z**3**-Z**3**. In some embodiments, the internally threaded apertures **18**A-C extend linearly laterally through the body **16** such that their axes Z**1**-Z**1**, Z**2**-Z**2** and Z**3**-Z**3** intersect with the longitudinal axis X-X of the body **16** (i.e., the threaded apertures **18**A-C extend through the entire thickness of the body **16**), as shown in FIG. **7**. In such embodiments, the orientation of the threaded apertures **18**A-C through the body can be expressed as the angular difference between the axes Z**1**-Z**1**, Z**2**-Z**2** and Z**3**-Z**3** of the threaded apertures **18**A-C about the longitudinal axis X-X. Similarly, in such embodiments the angular difference between the axes Z**1**-Z**1**, Z**2**-Z**2** and Z**3**-Z**3** of the threaded apertures **18**A-C about the longitudinal axis X-X will correspond to the angular difference between the sides or surfaces of the body **16** which the threaded apertures **18**A-C, and therefore their respective axes Z**1**-Z**1**, Z**2**-Z**2** and Z**3**-Z**3** pass through (because the body is cylindrical and oriented about the longitudinal axis X-X).

[0091] In the illustrated embodiment, the second internally threaded aperture **18**B is angularly offset or spaced from the first internally threaded aperture **18**A an angle θ**2** and from the third internally threaded aperture **18**C an angle θ**3**, and the first internally threaded aperture **18**A is angularly offset or spaced from the third internally threaded aperture **18**C an angle θ**4**, with respect to the same direction of rotation or angulation about longitudinal axis X-X of the body **16**, as illustrated in FIG. **7**. The particular target fusion bones and/or desired clinical outcome may dictate, or at least affect, the particular angulation of the internally threaded apertures **18**A-C about the longitudinal axis X-X of the body **16**. For example, fusion implant **10** embodiments particularly well suited for implantation into the medial or transverse cuneiform and first metatarsal bones of the foot for fusion of the cuneiform and first metatarsal (i.e., 1st TMT fusion), as in the illustrated embodiment, the second internally threaded aperture **18**B may angular spaced or offset from the third internally threaded aperture **18**C an angle θ**2** within a range of about 10 degrees to about 25 degrees, and more preferably from about 12 degrees to about 23 degrees. In some such 1st MTP embodiments, the second internally threaded aperture **18**B is angular spaced or offset from the third internally threaded aperture **18**C an angle θ**3** within a range of about 3 degrees to about 17 degrees, and more preferably from about 5 degrees to about 15 degrees. In some such 1st MTP embodiments, the first internally threaded aperture **18**A is angular spaced or offset from the third internally threaded aperture **18**C an angle θ**4** within a range of about 0 degrees to about 15 degrees, and more preferably from about 2 degrees to about 13 degrees. In alternative embodiments, the internally threaded apertures **18**A-C are angularly spaced from one another such that their respective angles θ**2**, θ**3** and θ**4** are outside of the above ranges, or are not angular spaced from one or more the apertures **18**A-C. As stated above, a particular clinical need or scenario may require an angular arrangement of the internally threaded apertures **18**A-C at least partially outside of, or different than, the above preferred ranges. For example, in fusion implant embodiments particularly well suited for ankle fusion, MTP fusion or triple arthrodesis, the internally threaded apertures **18**A-C may include ranges of the angles θ**2**, θ**3** and θ**4** that are different than the ranges discussed above with respect to the exemplary illustrated 1st TMT embodiment. For example, such ankle fusion, MTP fusion or triple arthrodesis implant **10** embodiments may include ranges of the angles θ**2**, θ**3** and θ**4** that fully overlap, partially overlap or do not overlap the ranges discussed above with respect to the exemplary illustrated 1st TMT embodiment.

[0092] For example, in the illustrated embodiment the fusion implant **10** is particularly suited for insertion into the medial or transverse cuneiform bone for fusion of the first metatarsal bone thereto. As such, the second internally threaded aperture **18**B is angular spaced or offset from the third internally threaded aperture **18**C an angle θ**2** of about 18 degrees, the second internally threaded aperture **18**B is angular spaced or offset from the third internally threaded aperture **18**C an angle θ**3** of about 10 degrees, and the first internally threaded aperture **18**A is angular spaced or offset from the third internally threaded aperture **18**C an angle θ**4** of about 8 degrees.

[0093] As noted above and shown in FIG. **7**, as the above described angular orientations θ**2**, θ**3** and θ**4** of the internally threaded apertures **18**A-C about the longitudinal axis X-X of the body **16** was referenced with respect to the same direction of rotation or angulation about the longitudinal axis X-X, the third internally threaded aperture **18**C is angularly positioned between the first and second internally threaded apertures **18**A, **18**B. As also noted above, such a construct is particular advantageous for use with implantation of the fusion implant into the medial or transverse cuneiform bone for fusion of the first metatarsal bone thereto. However, in some alternative embodiments the first internally threaded aperture **18**A is angularly positioned between the second and third internally threaded apertures **18**B, **18**C, and in other alternative embodiment the second internally threaded aperture **18**B is angularly

positioned between the first and third internally threaded apertures **18**A, **18**C. Again, the particular target fusion bones and/or desired clinical outcome may dictate the angular positioning of the internally threaded apertures **18**A-C with respect to each other.

[0094] As briefly discussed above, the internally threaded apertures **18**A-C may be oriented such that they are angled with respect to the longitudinal axis X-X. As indicated in FIG. **7**, FIGS. **8-10** illustrate sectional views of the exemplary fusion implant **10** taken along planes defined by the axes Z**1**-Z**1**, Z**2**-Z**2** and Z**3**-Z**3** of the internally threaded apertures **18**A-C and the longitudinal axis X-X. As such, the sectional views of FIGS. **8-10** are taken across a diameter of the internally threaded apertures **18**A-C and reveal the orientation of the axes Z**1**-Z**1**, Z**2**-Z**2** and Z**3**-Z**3** of the internally threaded apertures **18**A-C with respect to the longitudinal axis X-X. As the exemplary internally threaded apertures **18**A-C are angularly spaced about the longitudinal axis X-X (i.e., not coplanar), none of the sectional views of FIGS. **8-10** are taken along planes defined by more than one axes Z**1**-Z**1**, Z**2**-Z**2** and Z**3**-Z**3** of the internally threaded apertures **18**A-C.

[0095] As indicated in FIG. **7**, FIG. **8** illustrates a sectional view of the implant **10** taken along a plane defined by the longitudinal axis X-X of the body **16** and the axis Z**2**-Z**2** of the second internally threaded aperture **18**B. As such, the orientation of the axis Z**2**-Z**2** of the second internally threaded aperture **18**B, and therefore the orientation of the second internally threaded aperture **18**B itself, with respect to the longitudinal axis X-X of the body **16** (and fusion implant **10**) can be seen. As shown in FIG. **8**, the exemplary illustrated second internally threaded aperture **18**B of the fusion implant **10** is angled with respect to the longitudinal axis X-X of the body **16** at an angle θ**5** with respect to the first end **12** and the side of the body **16** that includes the second countersink groove **36**B and which the axis Z**2**-Z**2** of the second internally threaded aperture **18**B passes through (a distal facing side of the body **10**). Further, because the outer surface of the exemplary illustrated body **16** is cylindrical and oriented about the longitudinal axis X-X of the body **16**, the angle θ**5** also represents the angle, with respect to the first end **12**, between the second internally threaded aperture **18**B and the side of the body **16** that includes the second countersink groove **36**B and which the axis Z**2**-Z**2** of the second internally threaded aperture **18**B passes through. In some embodiments particularly well suited for 1st TMT fusion, the second internally threaded aperture **18**B is angled with respect to the longitudinal axis X-X of the body **16** such that the angle θ**5** of the axis Z**2**-Z**2** preferably ranges between about 68 degrees and about 73 degrees, and more preferably between about 70 degrees and about 71 degrees. In the illustrated 1st TMT fusion embodiment, the second internally threaded aperture **18**B is angled with respect to the longitudinal axis X-X of the body **16** such that the angle θ**5** is about 76 degrees. As stated above, a particular clinical need or scenario may dictate, at least in part, the arrangement of the internally threaded apertures **18**A-C. Therefore, in fusion implant embodiments particularly well suited for ankle fusion, MTP fusion or triple arthrodesis, such fusion implant **10** embodiments may include ranges of the angle θ**5** that are different than the ranges discussed above with respect to the exemplary illustrated 1st TMT embodiment. For example, such ankle fusion, MTP fusion or triple arthrodesis implant **10** embodiments may include ranges of the angle θ**5** that fully overlap, partially overlap or do not overlap the ranges discussed above with respect to the exemplary illustrated 1st TMT embodiment.

[0096] As indicated in FIG. **7**, FIG. **9** illustrates a sectional view of the implant **10** taken along a plane defined by the longitudinal axis X-X of the body **16** and the axis Z**1**-Z**1** of the first internally threaded aperture **18**A. As such, the orientation of the axis Z**1**-Z**1** of the first internally threaded aperture **18**A, and therefore the orientation of the first internally threaded aperture **18**A itself, with respect to the longitudinal axis X-X of the body **16** (and fusion implant **10**) can be seen. As shown in FIG. **9**, the exemplary illustrated first internally threaded aperture **18**A of the fusion implant **10** is angled with respect to the longitudinal axis X-X of the body **16** at an angle θ**6** with respect to the first end **12** and the side of the body **16** that includes the first countersink groove **36**A and which the axis Z**1**-Z**1** of the first internally threaded aperture **18**A passes through (a distal facing side of the body **10**). Further, because the outer surface of the exemplary illustrated body **16** is cylindrical and oriented about the longitudinal axis X-X of the body **16**, the angle θ**6** also represents the angle, with respect to the first end **12**, between the first internally threaded aperture **18**A and the side of the body **16** that includes the first countersink groove **36**A and which the axis Z**1**-Z**1** of the first internally threaded aperture **18**A passes through. In some embodiments particularly well suited for 1st TMT fusion, the first internally threaded aperture **18**A is angled with respect to the longitudinal axis X-X of the body **16** such that the angle θ**6** of the axis Z**1**-Z**1** preferably ranges between about 77 degrees and about 91 degrees, and more preferably between about 79 degrees and about 89 degrees. In the illustrated embodiment, the first internally threaded aperture **18**A is angled with respect to the longitudinal axis X-X of the body **16** such that the angle θ**6** is about 84 degrees. As stated above, a particular clinical need or scenario may dictate, at least in part, the arrangement of the internally threaded apertures **18**A-C. Therefore, in fusion implant embodiments particularly well suited for ankle fusion, MTP fusion or triple arthrodesis, such fusion implant **10** embodiments may include ranges of the angle θ**6** that are different than the ranges discussed above with respect to the exemplary illustrated 1st TMT embodiment. For example, such ankle fusion, MTP fusion or triple arthrodesis implant **10** embodiments may include ranges of the angle θ**6** that fully overlap, partially overlap or do not overlap the ranges discussed above with respect to the exemplary illustrated 1st TMT embodiment.

[0097] As indicated in FIG. **7**, FIG. **10** illustrates a sectional view of the implant **10** taken along a plane defined by the longitudinal axis X-X of the body **16** and the axis Z**3**-Z**3** of the third internally threaded aperture **18**C. As such, the orientation of the axis Z**3**-Z**3** of the third internally threaded aperture **18**C, and therefore the orientation of the third internally threaded aperture **18**C itself, with respect to the longitudinal axis X-X of the body **16** (and fusion implant **10**) can be seen. As shown in FIG. **9**, the exemplary illustrated third internally threaded aperture **18**C of the fusion implant **10** is angled with respect to the longitudinal axis X-X of the body **16** at an angle θ**7** with respect to the first end **12** and the side of the body **16** that includes the third countersink groove **36**C and which the axis Z**3**-Z**3** of the third internally threaded aperture **18**C passes through (a distal facing side of the body **10**). Further, because the outer surface of the exemplary illustrated body **16** is cylindrical and oriented about the longitudinal axis X-X of the body **16**, the angle θ**7** also represents the angle, with respect to the first end **12**, between the third internally

threaded aperture **18**C and the side of the body **16** that includes the third countersink groove **36**C and which the axis Z**3**-Z**3** of the third internally threaded aperture **18**C passes through. In some embodiments particularly well suited for 1st TMT fusion, the third internally threaded aperture **18**C is angled with respect to the longitudinal axis X-X of the body **16** such that the angle θ**7** of the axis Z**3**-Z**3** preferably ranges between about 55 degrees and about 69 degrees, and more preferably between about 57 degrees and about 67 degrees. In the illustrated embodiment, the third internally threaded aperture **18**C is angled with respect to the longitudinal axis X-X of the body **16** such that the angle θ**7** is about 62 degrees. As stated above, a particular clinical need or scenario may dictate, at least in part, the arrangement of the internally threaded apertures **18**A-C. Therefore, in fusion implant embodiments particularly well suited for ankle fusion, MTP fusion or triple arthrodesis, such fusion implant **10** embodiments may include ranges of the angle θ**7** that are different than the ranges discussed above with respect to the exemplary illustrated 1st TMT embodiment. For example, such ankle fusion, MTP fusion or triple arthrodesis implant **10** embodiments may include ranges of the angle θ**7** that fully overlap, partially overlap or do not overlap the ranges discussed above with respect to the exemplary illustrated 1st TMT embodiment.

[0098] As each of the angles θ**5**, θ**6** and θ**7** of the exemplary illustrated embodiment of the implant **10** are acute, each of the exemplary illustrated internally threaded apertures **18**A-C is angled with respect to the longitudinal axis X-X of the body **16** such that as the respective aperture **18**A-C extends from a first dorsal side of the body **16** including the respective countersink groove **62**A-C and respective axis Z**1**-Z**1**, Z**2**-Z**2** or Z**3**-Z**3** to an opposing side of the body **16** such that the respective aperture **18**A-C angles away from the first end. In some such embodiments, the third internally threaded aperture **18**C is not provided in the implant **10**. In some alternative embodiments, each of the angles θ**5**, θ**6** and θ**7** is either substantially right (i.e., about 90 degrees) or obtuse. In some alternative embodiments, at least one of the angles θ**5**, θ**6** and θ**7** is obtuse, and at least of the angles θ**5**, θ**6** and θ**7** is acute. In some such embodiments, the third internally threaded aperture **18**C is not provided in the implant **10**. In some such embodiments, the angle θ**5** of the first internally threaded aperture **18**A is acute. In some other such embodiments, the angle θ**5** of the first internally threaded aperture **18**A is obtuse.

[0099] As described above, in addition to being angularly spaced about the longitudinal axis X-X of the body **16** and angularly oriented with respect to the longitudinal axis X-X of the body **16**, the internally threaded apertures **18**A-C may be axial spaced along the longitudinal axis X-X of the body **16**. As the internally threaded apertures **18**A-C extend through the body **16** at different angles about the longitudinal axis X-X, at different locations in the outer surface of the body **16**, and at different angles with respect to the longitudinal axis X-X of the body **16**, the axial positioning or spacing of the internally threaded apertures **18**A-C along the longitudinal axis X-X of the body **16** may differ depending upon where the measurement is taken. However, to provide a reference of at least an embodiment particularly configured for advantageous fusion of the medial or transverse cuneiform bone and first metatarsal bone, such as in the illustrated embodiment, the relative axial spacing or lengths are illustrated in FIG. **11** with reference to the plane identified in FIG. **7**. As shown in FIG. **7**, the plane of reference of FIG. **11** is a plane extending through the longitudinal axis X-X of the body **16** and normal to the axis Z**2**-Z**2** of the second internally threaded aperture **18**B.

[0100] As shown in FIG. **8**, with respect to such a reference plane, the first internally threaded aperture **18**A positioned proximate the first end **12** of the body **16** is axially spaced a length L**2** from the second internally threaded aperture **18**B positioned in an intermediate portion of the body **16** that may be less than the length L**3** of the axial spacing between the second internally threaded aperture **18**B and the third internally threaded aperture **18**C positioned proximate the second end **14** of the body **16**. In the illustrated exemplary embodiment, with respect to such a reference plane, the length L**2** of the axial spacing between the first internally threaded aperture **18**A and the second internally threaded aperture **18**B at the locations where their respective axes Z**1**-Z**1**, Z**2**-Z**2** intersect the longitudinal axis X-X of the body **16** is about 0.3 inches, the length L**3** of the axial spacing between the third internally threaded aperture **18**C and the second internally threaded aperture **18**B at the locations where their respective axes Z**3**-Z**3**, Z**2**-Z**2** intersect the longitudinal axis X-X of the body **16** is about 0.37 inches, and therefore such an axial spacing between the first internally threaded aperture **18**A and the third internally threaded aperture **18**C is a length L**4** about 0.67 inches. As also shown in FIG. **11**, with respect to such a reference plane, the axial distance L**5** between the most axial aspect of the first end **14** and the first internally threaded aperture **18**A at the location where its axis Z**1**-Z**1** intersects the longitudinal axis X-X of the body **16** may be greater than the axial distance L**6** between the most axial aspect of the second end **14** and the third internally threaded aperture **18**C at the location where its axis Z**3**-Z**3** intersects the longitudinal axis X-X of the body **16**. In the illustrated exemplary embodiment, with respect to such a reference plane, the axial spacing between the most axial aspect of the first end **14** and the first internally threaded aperture **18**A at the location where its axis Z**1**-Z**1** intersects the longitudinal axis X-X of the body **16** is a length L**5** of about 0.44 inches, and the axial spacing between the most axial aspect of the second end **14** and the third internally threaded aperture **18**C at the location where its axis Z**3**-Z**3** intersects the longitudinal axis X-X of the body **16** is a length L**6** of about 0.13 inches. As stated above, a particular clinical need or scenario may dictate, at least in part, the arrangement of the internally threaded apertures **18**A-C.

[0101] It is noted that the illustrated exemplary embodiment of the implant **10** and internally threaded apertures **18**A-C is particularly well suited for 1st TMT fusion. Therefore, in fusion implant embodiments particularly well suited for ankle fusion, MTP fusion or triple arthrodesis, such fusion implant **10** embodiments may include lengths L**2**, L**3**, L**4**, L**5** and L**6**, or ranges of the lengths L**2**, L**3**, L**4**, L**5** and L**6**, that are different than the lengths L**2**, L**3**, L**4**, L**5** and L**6**, or ranges of the lengths L**2**, L**3**, L**4**, L**5** and L**6**, discussed above with respect to the exemplary illustrated 1st TMT embodiment. For example, such ankle fusion, MTP fusion or triple arthrodesis implant **10** embodiments may include lengths L**2**, L**3**, L**4**, L**5** and L**6** that are the same or different than the above described lengths, or may include ranges of the lengths L**2**, L**3**, L**4**, L**5** and L**6**, that fully overlap, partially overlap or do not overlap the ranges discussed above with respect to the exemplary illustrated 1st TMT embodiment.

[0102] The internal or female threads of the threaded apertures **18**A-C may be configured to interact with a fusion member, such as a bone screw, to couple the fusion member to

the device **10**. Thus, if the fusion implant **10** is implanted in one or more bones, and multiple fusion members are implanted into one or more adjacent bones and into engagement with the threaded apertures **18**A-C, the fusion implant **10** and threaded apertures **18**A-C act in concert to fuse the adjacent bones to one another. The characteristics of the threading of the threaded apertures **18**A-C, such as thread lead, may thus be dependent upon, or related to, the characteristics of the threading of fusion members. In some embodiments, the internal threading of the threaded apertures **18**A-C is a two-start, right handed threading, when viewed from the grooves **36** or rear side of the body **16**, that includes an about 0.14 inch nominal diameter, a thread lead of about 0.05 inches, and a thread pitch of about 0.02 inches. In the illustrated embodiment, the internal threading of the threaded apertures **18**A-C is a two-start, right handed threading (when viewed from the grooves **36** or rear side of the body **16**) that includes an about 3.5 millimeters nominal diameter, a thread lead of about 1.2 millimeters, and a thread pitch of about 0.6 millimeter. In alternative embodiments, locking mechanisms other than internal threads may be used. For example, in some embodiments the apertures **18**A-C do not include internal threads, rather they are configured to mate with fusion members through alternative locking mechanisms, such as key and slot agreement, detent mechanism, friction taper and interference fit. In addition, the use of different materials (metals or biologics) between the fusion implant **10** and fusion members could facilitate the locking of the fusion members and resultant securement.

[0103] As shown best in the cross-sectional views of FIGS. **8-11**, the first end **12** includes a substantially cylindrical aperture **40** extending into the body **16** about longitudinal axis X-X of the body **16**. The cylindrical aperture **40** may include an internally threaded portion **42** positioned at an intermediate portion of the cylindrical aperture **40**. The internally threaded portion **42** may define a diameter that is less than the diameter of the outer non-threaded portion of the cylindrical aperture **40** that is adjacent the first end **12**. The cylindrical aperture **40** may be used to couple the first end **12** of the fusion implant **10** to an instrument in a predefined orientation of the fusion implant **10**.

[0104] As discussed above, the fusion implant **10** may be paired with fusion members, such as bone screws, to form a fusion device capable of fusing adjacent bones. An exemplary fusion member is shown in FIGS. **12-14**. Exemplary fusion member **50** of FIGS. **12-14** is an externally threaded bone screw. Exemplary bone screw **50** may preferably be configured to couple to the threaded apertures **18**A-C of the fusion implant **10** to form a fusion device (as shown in FIGS. **15-18**), such as a bone fusion device. For example, the fusion implant **10** may be implanted into a first bone, and bone screws **50** may be implanted through a second bone adjacent the first bone and into engagement with the threaded apertures **18**A-C of the fusion implant **10** to at least facilitate fusion of the first and second bones.

[0105] In some embodiments, exemplary bone screw **50** is a self-tapping screw configured to cut threads and advance into bone through rotation of the screw **50**, as shown in FIGS. **12-14**. As shown in the illustrated bone screw **50**, the bone screw **50** may include a tip **52** defining a first end of the bone screw **50** and a head **54** defining an opposing second end of the bone screw **50**, and a longitudinal axis X**2**-X**2** extending between the tip **52** and the head **54**. The tip **52** may define a substantially flat circular surface, and the portion of the bone screw **50** adjacent the tip may narrow or taper to provide a tapered profile, as shown best in FIG. **12**. In alternative embodiments, the tip **52** is radiused, curved or otherwise configured to provide a smooth tip surface void of sharp edges (other than the threads, for example). The head **54** may also define a substantially flat surface, but may include an aperture configured to engage a tool to apply rotational force to the bone screw **50** via the aperture. For example, in the illustrated embodiment show best in FIG. **13**, the head **54** includes a flat surface with a hexagonal or hexalobe shaped aperture extending therein.

[0106] The bone screw **50** may define a cylindrical-like shank or body extending between the tip **52** and the head **54** and be substantially symmetrically disposed about the longitudinal axis X**2**-X**2**. The total axial length of the bone screw **50** measured from the tip **52** to the head **54**, and the largest diameter of the screw **50**, may vary depending upon the particular target fusion bones. As shown in FIG. **14**, the illustrated bone screw **50** is particularly well suited for implantation into the medial or transverse cuneiform and first metatarsal bones of the foot for fusion of the cuneiform and first metatarsal (i.e., 1st TMT fusion), and therefore preferably defines a total axial length within the range of about 0.8 inch to about 2.4 inches, such as axial lengths L**12** of about 0.79 inch, about 0.98 inch, about 1.18 inches, about 1.38 inches, about 1.57 inches, about 1.77 inches, about 1.97 inches, about 2.17 inches and about 2.36 inches. In some such 1st TMT fusion embodiments the total axial length L**12** of the bone screw **50** more preferably ranges from about 20 millimeters to about 60 millimeters. In the illustrated 1st TMT embodiment, the total axial length L**12** of the bone screw **50** is about 0.94 inch. In one embodiment, a fusion kit may include a plurality of bone screws **50** of differing axial lengths L**12**, such as a kit including bone screws **50** of axial lengths **12** from about from 0.8 inch to about 2.4 inches in about 0.2 inch increments. In some such embodiments the kit may further include at least one fusion implant **10** configured to couple to the bone screws **50**. However, the axial length L**12** of the bone screw **50** may depend upon, or at least be related to, a particular clinical need, injury, patient size, the particular fusion implant **10** or the like, and therefore bone screws **50** including axial lengths L**12** outside the ranges presented above may be desirable.

[0107] As an example, in some fusion member **50** embodiments particularly well suited for triple arthrodesis, the total axial length L**12** of the bone screw **50** may range from about 2.8 inches to about 3.3 inches. In one such triple arthrodesis embodiment, the total axial length L**12** of the bone screw **50** is about 71 millimeters. As another example, in some fusion member **50** embodiments particularly well suited for MTP fusion, the total axial length L**12** of the bone screw **50** may range from about 0.8 inch to about 1.8 inches. As yet another example, in some fusion member **50** embodiments particularly well suited for ankle fusion, the total axial length L**12** of the bone screw **50** may range from about 1.8 inch to about 2.6 inches.

[0108] As shown in FIGS. **12-14**, the shank or body of the fusion member **50** may include a first threaded portion **56** adjacent the tip **52**, a second threaded portion **60** adjacent the head **54**, and an intermediate non-threaded portion **58** axially positioned between the first threaded portion **56** and the second threaded portion **60**. The first threaded portion **56** adjacent the tip **52** may include male or exterior helical threading, and such exterior threading may include a double start or double lead thread and a self-tapping feature. As illustrated

best in FIG. **12**, the self-tapping feature may include at least one flute or relief **62** disposed into the periphery of the shank of the first threaded portion **56**, such as three reliefs **62** symmetrically disposed about the axis X**2**-X**2** of the fusion member **50**. In such an embodiment including multiple reliefs **62**, such, flutes or reliefs **62** interrupt the threaded portion **60** and the threading thereon to form interrupted threaded portions **61** therebetween.

[0109] The at least one relief **62** may axially extent partially along the axial length L**13** of the first threaded portion **56** from the tip **52**. For example, in the illustrated embodiment shown in FIG. **14**, the axial length L**13** of the first threaded portion **56** of the fusion member **50** is about 0.48 inch, and the axial length L**14** of each of the three reliefs or flutes **62** is less than 0.48 inch. In some embodiments, the axial length L**13** of the first threaded portion **56** is preferably greater than about 10 percent, and less than about 90 percent, of the total axial length L**12** of the fusion member **50**, and more preferably greater than about 25 percent, and less than about 75 percent, of the total axial length L**12** of the fusion member **50**. Further, in some embodiments, the axial length L**14** of each relief **62** is preferably greater than about 10 percent, and less than about 90 percent, of the axial length L**13** of the first threaded portion **56**, and more preferably greater than about 25 percent, and less than about 75 percent, of the axial length L**13** of the first threaded portion **56**. It is noted however, that the axial length L**13** of the first threaded portion **56** and the axial length L**14** of each relief **62** may depend upon, or at least be related to, the axial lengths of the other portions of the fusion member **50**. Further, the axial length L**13** of the first threaded portion **56**, as well as the axial length of each relief **62**, may depend upon, or at least be related to, a particular clinical need, injury, patient size and/or fusion implant, and therefore fusion members **50** including axial lengths L**13** and L**14** outside the ranges presented above may be desirable.

[0110] The intermediate portion of the at least one flute or relief **62** may be radiused to provide a smooth transition between the at least one relief **62** and the adjacent portion of the shank, such as a relief-free portion of the first threaded portion **56** in embodiments where the axial length of the at least one relief **62** is less than the axial length of the first threaded portion **56**. For example, as shown in the illustrated embodiment in FIGS. **12-14**, the trailing surface **64** of each relief **62**, with respect to the direction of rotation R, may include a radiused portion **66** that transitions the junction of each relief **62** and the intermediate portion of the first threaded portion **56** that is void of the at least one relief **62**. In one embodiment, the radius of the radiused portion **66** is about 0.08 inch.

[0111] The at least one relief **62** may also include a leading surface **68** that defines a leading edge extending between the leading surface **68** and the exterior of the adjacent interrupted portion **61**, with respect to the direction of rotation R. In such an embodiment, the leading surface **68** may be angled with respect to the longitudinal axis X**2**-X**2** such that an acute angle is formed between the leading surface **68** and the interrupted exterior threaded portion **61**. The acute angle formed between the surfaces may facilitate the cutting of threads in bone via the leading edge when the screw **50** is applied to a bone surface and rotated in the direction of rotation R. During such a self-tapping process, the at least one flute or relief **62** may provide a cavity or channel in which bone chips, dust or other debris resulting from the self-tapping process can collect and thereby prevented from interfering with the self-tapping process.

[0112] As described above, the exterior threading of the first threaded portion **56** is provided helically along the first portion **56** with respect to a direction of rotation R about the axis X**2**-X**2**. In the illustrated embodiment, the exterior threading of the first threaded portion **56** is right-hand thread such that the threading causes the fusion member **50** to advance in a direction along the axis X**2**-X**2** from the head **54** to the tip **52** upon clockwise rotation of the member **50** about the axis X**2**-X**2**. In an alternative embodiment, the exterior threading of the first threaded portion **56** is left-hand thread. It is noted, however, that the particular handedness of the exterior threading of the first threaded portion **56** of the fusion member **50** is dependent only with respect to the handedness of the internal threading of the internally threaded apertures **18**A-C of the fusion implant **10**, as the fusion member **50** and fusion implant **10** are preferably configured to threadably coupled to one another via the internally threaded apertures **18**A-C.

[0113] The exterior or male threading of the first threaded portion **56** may be a single, double or other multiple start threading and may include a constant for varying diameter, pitch and lead. For example, in one embodiment the threading of the first threaded portion **56** is a double start threading that includes an about 0.14 inch nominal diameter, a thread lead of about 0.05 inches, and a thread pitch of about 0.02 inches. In the illustrated embodiment, the threading of the first threaded portion **56** is a two-start, right handed thread (when viewed from the head **54**) that includes an about 3.5 millimeters nominal diameter, a thread lead of about 1.2 millimeters, and a thread pitch of about 0.6 millimeter. In some embodiments, the threading of the first threaded portion **56** is a machine type threading. It is noted, however, that the type, diameter, pitch, length, number of starts, thread profile and any other characteristic of the threading of the first threaded portion **56** may be dependent upon, or at least related to, the respective characteristic of the threading of the internally threaded apertures **18**A-C of the fusion implant **10**. As such, the exterior threading of the first threaded portion **56** of the bone screw **50** and the internal threading of the threaded apertures **18**A-C of the fusion implant **10** of the illustrated embodiment are configured to mate with one another, and therefore both define two-start, right handed threading (when viewed from the head **54** of the fusion member **50** and from the rear side or grooves **36** of the implant **10**) that includes about a 3.5 millimeters nominal diameter, a thread lead of about 1.2 millimeters, and a thread pitch of about 0.6 millimeter. In some such embodiments, the diameter is about 0.135 inch. As explained further below with respect to the non-threaded portion **58**, the diameter of the first threaded portion **56** (either major, minor or nominal), may depend upon, or at least be related to the particular target fusion bones (besides the internally threaded apertures **18**A-C of the fusion implant **10**).

[0114] The portion of the bone screw **50** that is positioned adjacent the first threaded portion **56** may be a non-threaded portion **58**, as shown in FIGS. **12-14**. The non-threaded portion **58** may define a relatively smooth, uninterrupted outer surface of a diameter D**3**. In some embodiments, the diameter D**3** of the non-threaded portion **58** may be substantially similar to the major diameter of the first threaded portion **56**. As such, in some such embodiments the diameter D**23** may refer to both the diameter of the non-threaded portion **58** and the

major diameter of the first threaded portion **56**. In the illustrated exemplary embodiment, the diameter D**3** of the non-threaded portion **58** and the major diameter of the first threaded portion **56** of the fusion member **50** are substantially the same (i.e., both D**2**), and therefore the reference D**3** refers to both diameters.

[0115] The diameter D**3** of the fusion member **50** may vary and depend upon, or at least be related to, the particular target fusion bones (besides the internally threaded apertures **18**A-C of the implant **10**). For example, in the illustrated embodiment the fusion implant **10** is particularly well suited for 1st TMT fusion, and defines a diameter D**3** that preferably ranges from about 0.1 inch to about 0.2 inch, and more preferably from about 4 millimeters to about 6 millimeters. In the illustrated 1st TMT embodiment, the diameter D**3** of the fusion member **50** is about 0.13 to about 0.14 inch. As another example, in some fusion member **50** embodiments particularly well suited for MTP fusion, the diameter D**3** of the fusion member **50** may be about 0.137 inch. As yet another example, in some fusion member **50** embodiments particularly well suited for ankle fusion, the diameter D**3** of the fusion member **50** may be about 0.2 inch. As a further example, in some fusion member **50** embodiments particularly well suited for triple arthrodesis, the diameter D**3** of the fusion member **50** may range from about 0.15 inch to about 0.24 inch, such as a diameter D**3** of about 0.157 inch or about 0.236 inch.

[0116] In some embodiments, the non-threaded portion **58** may include some type of macro, micro or nano texture, structure or coating. As shown in FIG. **14**, the non-threaded portion **58** may extend along the longitudinal axis X**2**-X**2** of the bone screw for an axial length L**16**. In some embodiments, the axial length L**16** of the non-threaded portion **58** is greater than the axial length of the first threaded portion **56**. In some embodiments, the axial length L**16** of the non-threaded portion **58** is preferably greater than about 10 percent, and less than about 90 percent, of the total axial length L**12** of the fusion member **50**, and more preferably greater than about 25 percent, and less than about 75 percent, of the total axial length L**12** of the fusion member **50**. It is noted however, that the axial length L**16** of the non-threaded portion **58** may depend upon, or at least be related to, the axial lengths of the other portions of the fusion member **50**. Further, the axial length L**16** of the non-threaded portion **58** may depend upon, or at least be related to, a particular clinical need, injury, patient size and/or fusion implant, and therefore fusion members **50** including axial length L**16** outside the ranges presented above may be desirable. As an example, in some exemplary 1st TMT embodiments the total axial length L**12** of the bone screw ranges from about 20 millimeters to about 60 millimeters in about 5 millimeter increments, and such 5 millimeter axial length increments are provided by 5 millimeter differences in the axial length of the non-threaded portion **58** (i.e., the length L**13** of the first threaded portion **56** and the length L**17** of the second threaded portion **60** remain the same).

[0117] As shown in FIGS. **12-14**, the fusion member **50** may include a second threaded portion **60** adjacent the head **54** and non-threaded portion **58**. The second threaded portion **60** may include male or exterior helical threads. The exterior or male threading of the second threaded portion **60** may be a single, double or other multiple start threading, and may include constant or varying diameter, pitch and lead. In some embodiments, the threading is a cancellous type threading (e.g., a coarse thread threaded to only the first third of the length of the fusion member **50**).

[0118] In some embodiments, the thread lead is dependent upon, or related to, the thread lead of the exterior threading of the first threaded portion **56** and the internal threading of the internally threaded apertures **18**A-C of the fusion implant **10**. In some such embodiments, the thread lead of the threading of the second threaded portion **60** is less than the thread lead of the threading of the first threaded portion **56** and the internally threaded apertures **18**A-C. Stated differently, in some embodiments the thread lead of the threading of the first threaded portion **56** (i.e., the threading adjacent the tip **52**) and the internally threaded apertures **18**A-C may be greater than the thread lead of the threading of the second threaded portion **60** (i.e., the threading adjacent the head **54**). In some such embodiments where the threading of the second threaded portion **60** is a single start thread, the thread lead and pitch are less than the thread lead of the first threaded portion **56** and the internally threaded apertures **18**A-C (because the thread lead and pitch are the same). For example, in one embodiment the threading of the second threaded portion **60** is a single start threading that includes an about 0.03 inch thread lead and thread pitch, and the threading of the internally threaded apertures **18**A-C and second threaded portion **56** include an about 0.05 inch thread lead. In the illustrated embodiment, the threading of the second threaded portion **60** is a single-start, right handed threading (when viewed from the head **54**) that includes a thread lead and pitch of about 0.28 millimeter.

[0119] In some embodiments, the axial length L**17** of the second threaded portion **60** is less than the axial lengths L**16**, L**13** of the non-threaded portion **58** and the first threaded portion **56**. In some embodiments, the axial length L**17** of the second threaded portion **60** is preferably greater than about 10 percent, and less than about 90 percent, of the total axial length L**12** of the fusion member **50**, and more preferably greater than about 25 percent, and less than about 75 percent, of the total axial length L**12** of the fusion member **50**. It is noted however, that the axial length L**17** of the second threaded portion **60** may depend upon, or at least be related to, the axial lengths of the other portions of the fusion member **50**. Further, the axial length L**17** of the second threaded portion **60** may depend upon, or at least be related to, a particular clinical need, injury, patient size and/or fusion implant, and therefore fusion members **50** including axial lengths L**17** outside the ranges presented above may be desirable. In the illustrated embodiment shown in FIGS. **12-14**, the axial length L**17** of the second threaded portion **60** is about 0.3 inch.

[0120] The second threaded portion **60** may include a compression wedge or tapered profile extending from the head **54** to the non-threaded portion **58**, as shown in FIGS. **12-14**. In some such embodiments, the major diameters formed by the outer edges of the threads and the minor diameters formed by the gullets between the threads both taper (i.e., tapered threading). In some other such embodiments, only one of the major and minor diameters of the threading of the threaded portion **60** tapers. In the illustrated embodiment, the major diameter of the threads tapers from the head **54** to the non-threaded portion **58**, but the minor diameter defined by the gullets remains constant along the axial length L**17** of the second threaded portion **60**. The tapering of the major diameter of the threads of the second threaded portion **58** may be formed by threads of differing thread profile with differing

thread depth or percentage of thread. For example, as shown in the illustrated embodiment, the threads of the second threaded portion **60** may be machined to define progressively shorter thread depths and wider crests which are angled with respect to the longitudinal axis X**2**-X**2** of the fusion member **50** from the head **54** to the non-threaded portion **58** to form the tapered profile. In the illustrated embodiment, the major diameter of the threads of the second threaded portion **60** taper at an angle of about 3 degrees with respect to the longitudinal axis X**2**-X**2** of the fusion member **50**. In some embodiments, the taper of the major diameter of the threads of the second threaded portion **60** preferably ranges from a minimum taper angle that will effectively provide a "wedge" characteristic that prevents the fusion member **50** from being pulled through the particular bone that the second threaded portion **60** is implanted in, to a maximum taper angle that will effectively allow the fusion member **50** to be implanted at least partially through a fusion bone **50** and rotate therein to, eventually, achieve fusion.

[0121] As shown best in FIG. **13**, the second threaded portion **60** is adjacent the head **54** of the fusion member **50**. The head **54** may include a lateral surface defining the end or most axial surface of the fusion member **50** opposing the tip **52**. In the illustrated embodiment, the head **54** includes a planar surface that is normal to the longitudinal axis X**2**-X**2** of the fusion member **50**. As discussed above, the head **54** may include an aperture or other mechanism capable of applying torque to the fusion member **50**. The threading of the second threaded portion **60** may continue to the head surface **54** such that the major diameter of the threads decreases at is approaches the head **54**. In an alternative embodiment, the head **50** may not be a lateral surface, but may be a member defined along the longitudinal axis X2-X**2** and positioned adjacent the second threaded portion **50**.

[0122] Fusion member **50** embodiments including such a greater thread lead of the threading adjacent the tip **52** (e.g., the first threaded portion **56**) and the threading of the internally threaded apertures **18**A-C of the fusion implant **10** as compared to threading adjacent the head **54** (e.g., the second threaded portion **60**), may be advantageous for facilitating bone fusion because such a thread arrangement may act to pull adjacent bones into contact with each other and, depending upon the level of rotation of the fusion member, apply a compressive force or load to the joint between the bone surfaces contacting each other. For example, when a fusion implant **10** is implanted into a first bone, such a fusion member **50** can be rotatably advanced into an adjacent but spaced second bone to such a degree that the second threaded portion **60** is in engagement with the first bone and the first threaded portion **56** has partially or primarily passed through the second bone and into the first bone and engagement with an internally threaded aperture **18**A-C of the fusion implant **10** implanted therein. In such a position, further clockwise rotation of the fusion member **50** results in the fusion member **50** traveling farther along its longitudinal axis X**2**-X**2** per unit of revolution through the first bone and implant **10** than in the second bone (because the differences of thread lead of the first threaded portion **56** and second threaded portion **60**). As a result, rotation of the fusion member **50** acts to pull the second bone (via the threads of the second threaded portion **60**) towards the first bone to reduce the space between adjacent surfaces of the bones.

[0123] After the space between the first and second bones is eliminated and the adjacent surfaces meet (i.e., first and second bones in abutment), further rotation of the fusion member **50** will apply compressive forces to the joint between the adjacent surfaces because the second threaded portion **60** engages the inner surfaces of second bone and thereby resists being pulled through the second bone as the first threaded **56** portion advances in the first bone and fusion implant **10**. The wedge or taper shape of the second threaded portion **60** may facilitate such engagement with the interior of the second bone that prevents the second threaded portion **60** from being pulled therethrough, and application of the compressive force. As a result, the thread leads and the relative lengths of the first and second bones, the first threaded portion **56**, the second threaded portion **60** and the non-threaded portion **58** must be properly proportioned to utilize the fusion member **50** and implant **10** to provide a secure construct that facilitates fusion of the first and second bones. For example, the above mentioned aspects must be properly proportioned or related such that the first threaded portion **56** does not pass through the implant **10** before the space between the target fusion bones is eliminated, the space between the target fusion bones is not eliminated before the fusion member **50** engages the fusion implant **10**, the first and second threaded portions **56**, **60** do not substantially engage the same bone at the same time (the non-threaded portion **58** spans the joint), and the fusion member **50** does not strip out or fail to engage the first bone, second bone or fusion implant **10**.

[0124] As shown in FIGS. **15** and **16**, an exemplary fusion device **70** may include a fusion implant and at least two fusion members, such as the illustrated exemplary fusion implant **10** and the illustrated exemplary fusion member **50** described above. A first fusion member **50**A may be threadably engaged with the implant **10** via the first internally threaded aperture **18**A adjacent the first end or tip **12** and a second fusion member **50**B may be threadably engaged with the implant **10** via the second internally threaded aperture **18**B intermediately positioned in the body **16**. The third internally threaded aperture **18**C adjacent the second end **14** may or may not include a third fusion member **50**C. Further, as discussed above, implant **10** may not even include the third internally threaded aperture **18**C. In the illustrated embodiment, the exemplary fusion device **70** includes the implant **10** that includes the third internally threaded aperture **18**C, and further includes a third fusion member **50**C provided in the third internally threaded aperture **18**C.

[0125] As illustrated best in FIGS. **15** and **16**, in such an arrangement or construct the axes X**2**-X**2** of the first, second and third fusion members **50**A-C will substantially align with the lateral axes Z**1**-Z**1**, Z**2**-Z**2** and Z**3**-Z**3** of the internally threaded apertures **18**A-C, respectively. Therefore, in such a construct the description presented above with respect to the illustrated and described positioning, arrangements, orientations and the like of the internally threaded apertures **18**A-C and/or their respective axes Z**1**-Z**1**, Z**2**-Z**2** and Z**3**-Z**3** equally applies to the respective fusion members **50**A-C coupled thereto, and is not repeated herein with respect to the fusion members **50**A-C for brevity purposes.

[0126] As shown in FIG. **16**, the fusion members **50**A-C may be positioned within the respective internally threaded apertures **18**A-C (e.g., via rotation) such that the first threaded portions **56** thereof partially pass through the apertures **18**A-C and body **16** of the implant **10**. In such an arrangement, each fusion member **50**A-C may be engaged with its respective internally threaded aperture **18**A-C to a degree that is more, less or the same as the degree to which another of the

fusion members **50**A-C is engaged with the internally threaded apertures **18**A-C. Further, the first threaded portions **56** of the fusion members **50**A-C may be positioned on both the front (or distal) and rear (or proximal) sides of the body **16**, or may be positioned only on the rear (or proximal) side of the body **16** (in addition to within the internally threaded apertures **18**A-C). In some other embodiments, the first threaded portions **56** may be positioned only on the front side (or distal side) of the body (in addition to within the internally threaded apertures **18**A-C). In the illustrated embodiment, the first threaded portion **56** of the third fusion member **50**C partially passes through the third internally threaded aperture **18**C to an extent that is greater than the extent that the first threaded portion **56** of the first fusion member **50**A passes through the first internally threaded aperture **18**A, and the first threaded portion **56** of the first fusion member **50**A passes through the first internally threaded aperture **18**A to an extend that is greater than the extent that the first threaded portion **56** of the second fusion member **50**B passes through the second internally threaded aperture **18**B. Also in the illustrated embodiment, the fusion members **50**A-C are positioned within the respective internally threaded apertures **18**A-C such that a portion of the flutes or reliefs **62** of the first threaded portions **56** are positioned on the front side (or distal side) of the body **16** and the remaining portions of the fusion members **50**A-C are positioned on the rear side (or proximal side) of the body **16** (besides the portions that are positioned within the internally threaded apertures **18**A-C).

[0127] Exemplary fusion device **70** may be particularly well suited for providing or facilitating fusion of adjacent bones, as shown in FIGS. **17** and **18**. The fusion implant **10** may be particularly well suited for implantation into a first B**1**, and the fusion members **50**A-C may be particularly well suited for implantation into a second B**2** adjacent the first bone B**1** and into the first bone B**1** (and into the respective internally threaded apertures **18**A-C). In such a construct, the fusion device **70** provides or facilitates fusion of the first bone B**1** and the second bone B**2** (via the fusion members **50**A-C and implant **10**) internally threaded apertures **18**A-C. In the illustrated embodiment, the first bone B**1** is the medial or transverse cuneiform bone, and the second bone B**2** is the first metatarsal bone. In the illustrated embodiment, the device **70** provides fusion of the medial or transverse cuneiform bone and the first metatarsal bone because the implant **10** and fusion members **50** are effective in drawing the bones together and, ultimately, applying a compressive force to the joint between the bones, as shown in FIGS. **17** and **18**.

[0128] As shown in the lateral elevational (dorsal) perspective view of FIG. **17** and the top or dorsal view of FIG. **18**, the fusion implant **10** can be implanted in an orientation such that the distal or first side portion of the body **16** (the portion that includes the grooves **36**A-C and the axes Z**1**-Z**1**, Z**2**-Z**2**, Z**3**-Z**3** of the internally threaded apertures **18**A-C) generally faces distally, the proximal or second side portion of the body **16** (the side that opposes the distal or first side portion) generally faces proximally, the dorsal or third side portion of the body **16** generally faces dorsally, and the plantar or fourth side portion of the body **16** (the side that opposes the dorsal or third side) generally faces in a plantar direction. As such, the longitudinal axis X-X of the body **16** generally extends in a dorsal-plantar direction from the first end **12** to the second end **14**, and the axes Z**1**-Z**1**, Z**2**-Z**2**, Z**3**-Z**3** of the internally threaded apertures **18**A-C generally extend in a distal-proximal direction from the head **54** to the tip **52**.

[0129] As shown in FIG. **17**, the fusion implant **10** of the fusion device **70** may preferably be positioned generally intermediate in the first bone B**1** in the dorsal-plantar direction. As shown in FIG. **18**, the fusion implant **10** of the fusion device **70** may also preferably be positioned generally intermediate in the first bone B**1** in the medial-lateral direction. Further, the fusion implant **10** of the fusion device **70** may preferably be oriented and configured, such as the configurations of the internally threaded apertures **18**A-C discussed above, such that the fusion members **50**A-C are also positioned generally intermediate in the first bone B**1** and the second bone B**2** in the dorsal-plantar and medial-lateral directions, as shown in FIGS. **17** and **18**.

[0130] The fusion implant **10** may also be positioned in a distal portion of the first bone B**1** in the distal-proximal direction, as shown in FIGS. **17** and **18**. The distal-proximal positioning of the implant **10** and/or the lengths L**13**, L**17** and L**16** of the first threaded portion **56**, second threaded portion **60** and non-threaded portion **58**, respectively, of the fusion members **50**A-C may be configured such that when the first threaded portion **56** of the fusion members **50**A-C are threadably engaged with the respective internally threaded apertures **18**A-C of the fusion implant **10**, the first threaded portion **56** is at least primarily positioned in the first bone B**1** and the second threaded portion **60** is at least primarily positioned in the second bone B**2**. In some embodiments, the distal-proximal positioning of the implant **10** and/or the relative lengths L**13**, L**17** and L**16** of the first and second threaded and non-threaded portions **56**, **60**, **58**, of the fusion members **50**A-C may be configured such that when the first threaded portion **56** of the fusion members **50**A-C is threadably engaged with the respective internally threaded apertures **18**A-C of the fusion implant **10**, the first threaded portion **56** is only positioned in the first bone B**1**, the second threaded portion **60** is only positioned in the third second bone B**2**, and the non-threaded portion **58** spans the joint between the first bone B**1** and second bone B**2**, as shown in FIGS. **17** and **18**.

[0131] FIGS. **19** and **20** illustrate an exemplary instrument for use in positioning a fusion implant, such as fusion implant **10**, into at least one bone to obtain a bone fusion in a lower extremity of a patient. The instrument is an exemplary surgical guide instrument **100** that includes an exemplary base member **108**. As shown in FIGS. **19** and **20**, the exemplary base member **108** is a substantially planar member defining a top surface and an exemplary dorsal abutment surface **110** substantially opposing the top surface. The exemplary base member **108** also includes an exemplary first arm **102** and an exemplary second arm **104** extending vertically or in a dorsal direction from the top surface (the first arm **102** and a second arm **104** extending away from the dorsal abutment surface **110**). In the illustrated embodiment, the first arm **102** and second arm **104** angularly extend away from each other as they extend from the base member **108** such that they form a "V" shape. The dorsal ends of the first arm **102** and second arm **104** may include first and second manually engageable member **122**A, **122**B, respectively, as shown in FIGS. **19** and **20**. In the illustrated embodiment, the manually engageable members **122**A, **122**B form apertures sized and shape to allow a user to pass at least a portion of their fingers through the manually engageable members **122**A, **122**B. As such, the manually engageable members **122**A, **122**B may allow the guide instrument **100** to be manually applied to target fusion bones, and manually removed therefrom.

[0132] The exemplary base member **108** also includes an exemplary guide member **106** coupled thereto or integral therewith. The exemplary guide member **106** defining a tube or barrel shape extending in a dorsal-plantar direction from the exemplary base member **108**. The exemplary guide member **106** preferably further defines a longitudinally extending aperture **109** aligned and extending through the tube or barrel and base member **108** defining a longitudinal axis X**3**-X**3** extending in the dorsal-plantar direction. Thereby, the longitudinally extending aperture **109** of the guide member **106** passes through the base member **108** from the top surface to the dorsal abutment surface **110**, as shown in FIGS. **19** and **20**. Also, the tube or barrel shape of the exemplary guide member **106** provides a visual and tactile indication of the orientation and position of the longitudinal axis X**3**-X**3** of the longitudinally extending aperture **109**.

[0133] The longitudinally extending aperture **109** of the guide member **108** may be sized and shaped to allow a bone anchor therethrough. The longitudinally extending aperture **109** may further be sized and shaped to guide a bone anchor along the longitudinal X**3**-X**3**. In the illustrated embodiment, the longitudinally extending aperture **109** of the guide member **108** is shaped and sized to receive a k-wire therethrough. In some embodiments, the longitudinally extending aperture **109** may be cylindrical and define a diameter substantially similar to known standard k-wire sizes. For example, in the illustrated embodiment, the longitudinally extending aperture **109** is cylindrical and defines a diameter of about 0.63 inches to accept a standard k-wire therethrough.

[0134] In the illustrated embodiment of FIGS. **19** and **20**, the exemplary dorsal abutment surface **110** of the base member **108** is planar and extends about the longitudinally extending aperture **109** such that the dorsal abutment surface **110** defines the plantar end or opening of the longitudinally extending aperture **109**. In the illustrated embodiment, the dorsal abutment surface **110** is oriented substantially normal to the longitudinally extending aperture **109**. The illustrated dorsal abutment surface **110** also extends about the opening of the longitudinally extending aperture **109** in both the medial-lateral and proximal-distal directions. As such, the dorsal abutment surface **110** can be placed in abutment with a dorsal surface of a target bone, and thereby the opening of the longitudinally extending aperture **109** can placed in abutment with the dorsal surface of the target bone.

[0135] The guide instrument **100** may also include an exemplary distal positioning tab **112** and an exemplary lateral positioning tab **116** extending from the dorsal abutment surface **110** of the base member **108** in a plantar direction (away from the top surface of the base member **108**). The exemplary lateral positioning tab **116** may define a substantially planar member, and may extend perpendicularly from the dorsal abutment surface **110**. The exemplary lateral positioning tab **116** may preferably include a lateral abutment surface **118** facing the medial direction. The lateral positioning tab **116** may also preferably be positioned such that the lateral abutment surface **118** is laterally spaced from the longitudinal X**3**-X**3** of the longitudinally extending aperture **109**. The medial-lateral width, proximal-distal length and dorsal-plantar height of the lateral positioning tab **116** should be configured such that the lateral abutment surface **118** of the lateral positioning tab **116** can abut or engage a medial facing surface of the target bone (such as being positioned between the medial and intermediate cuneiform) when the dorsal abutment surface **110** abuts or engages a dorsal surface of the target bone.

[0136] In such a configuration, the lateral positioning tab **116** can be effective in positioning the longitudinal X**3**-X**3** of the longitudinally extending aperture **109** in a medial-lateral direction of the target bone. In such embodiments, the medial-lateral spacing between the lateral abutment surface **118** of the lateral positioning tab **116** and the longitudinal X**3**-X**3** of the longitudinally extending aperture **109** is preferably configured to position the longitudinal X**3**-X**3** of the longitudinally extending aperture **109** in an intermediate position in the medial-lateral direction in the target bone. The illustrated embodiment of the guide instrument **100** is particularly well suited for use with the medial or transverse cuneiform bone. As such, the lateral abutment surface **118** of the lateral positioning tab **116** is spaced from the longitudinal X**3**-X**3** of the longitudinally extending aperture **109** about 7 millimeters, such that when the when the dorsal abutment surface **110** abuts or engages the dorsal surface of the medial or transverse cuneiform bone, and the lateral abutment surface **118** abuts or engages a medial surface of the medial or transverse cuneiform bone (such as being positioned between the medial and intermediate cuneiform), the longitudinal X**3**-X**3** of the longitudinally extending aperture **109** is positioned in an intermediate position of the medial or transverse cuneiform bone in the medial-lateral direction.

[0137] Similar to the lateral abutment surface **118** of the medial positioning tab **116**, the illustrated exemplary distal positioning tab **112** includes a distal abutment surface **114** extending from the dorsal abutment surface **110** of the base member **108** in a plantar direction (away from the top surface of the base member **108**). The exemplary distal positioning tab **112** may define a substantially planar member, and may extend perpendicularly from the dorsal abutment surface **110**. The exemplary distal abutment surface **114** may preferably face the proximal direction. The distal positioning tab **112** may also preferably be positioned such that the distal abutment surface **114** is distally spaced from the longitudinal X**3**-X**3** of the longitudinally extending aperture **109**. The medial-lateral width, proximal-distal length and dorsal-plantar height of the distal positioning tab **112** should be configured such that distal abutment surface **114** of the distal positioning tab **112** can abut or engage a distal facing surface of the target bone when the dorsal abutment surface **110** abuts or engages a dorsal surface of the target bone.

[0138] In such a configuration, the distal positioning tab **112** can be effective in positioning the longitudinal X**3**-X**3** of the longitudinally extending aperture **109** in a distal-proximal direction of the target bone. In such embodiments, the distal-proximal spacing between the distal abutment surface **114** of the distal positioning tab **112** and the longitudinal X**3**-X**3** of the longitudinally extending aperture **109** is preferably configured to position the longitudinal X**3**-X**3** of the longitudinally extending aperture **109** in an intermediate position in the distal-proximal direction in the target bone. The illustrated embodiment of the guide instrument **100** is particularly well suited for use with the medial or transverse cuneiform bone. As such, the distal abutment surface **114** of the distal positioning tab **112** is spaced from the longitudinal X**3**-X**3** of the longitudinally extending aperture **109** about 15 millimeters, such that when the dorsal abutment surface **110** abuts or engages a dorsal surface of the medial or transverse cuneiform bone, the lateral abutment surface **118** abuts or engages

a medial surface of the medial or transverse cuneiform bone, the distal abutment surface **114** abuts or engages a distal surface of the medial or transverse cuneiform bone (such as being positioned between the medial cuneiform and first metatarsal), and the longitudinal X**3**-X**3** of the longitudinally extending aperture **109** is thereby positioned in an intermediate position of the medial or transverse cuneiform bone in the distal-proximal direction.

[0139] In such an arrangement with the longitudinal X**3**-X**3** of the longitudinally extending aperture **109** positioned intermediate in the medial-lateral and proximal-distal directions, as well as the opening of the longitudinally extending aperture **109** on the dorsal abutment surface **109** in abutment with the dorsal surface of the intermediate portion of the target bone (e.g., the medial or transverse cuneiform), a bone anchor, such as a k-wire, can be inserted through the longitudinally extending aperture **109** and along the longitudinal X**3**-X**3** and into the intermediate portion of the target bone. In this manner, the surgical guide instrument **100** can provide for accurate and repeatable placement of the bone anchor in the intermediate portion of the target bone with respect to the medial-lateral and proximal-distal directions. One the bone anchor is placed in coupled a position in the target bone, the bone anchor can be utilized to create an implant cavity for insertion of the above described exemplary fusion member **10** into the cavity, as discussed further below. Thus, the surgical guide instrument **100** facilitates intermediate positioning of the exemplary fusion member **10** in the medial-lateral and proximal-distal directions.

[0140] As also shown in FIGS. **19** and **20**, the guide instrument **100** may include a resection slot **120** extending in a medial-lateral direction from a lateral side of the base member **120**. In the illustrated embodiment, a resection slot **120** is provided on the medial side of the base member **120** and extends in a medial-lateral direction towards the lateral side of the base member **120**. As shown in FIGS. **19** and **20**, the resection slot **120** is preferably spaced from the distal abutment surface **114** in the proximal direction. When the bone anchor is received within the longitudinally extending aperture **109** and coupled to the target bone, the resection slot **120** can be utilized to resect a distal portion of the target bone. Such resection of the distal portion of the target bone may facilitate fusion of the target bone with an adjacent second target bone through the use of the exemplary fusion device **70** (see FIGS. **15-18**) and an exemplary surgical instrument **200** described below.

[0141] FIGS. **21** and **22** illustrate an exemplary instrument for use in positioning a fusion implant and fusion members into adjacent bones to obtain bone fusion in a lower extremity of a patient. The instrument is an exemplary targeting guide **200** that includes an exemplary fusion implant **210**, an exemplary targeting member **250**, at least one exemplary guide member **265**, and an exemplary outrigger member **280**. The exemplary fusion implant **210** is substantially the same as the exemplary fusion implant **10** described above with reference to FIGS. **1-11** and **15-18**, and therefore like reference numerals preceded by the numeral "2" are used to indicate like elements. The description presented above with respect to fusion implant **10** of FIGS. **1-11** and **15-18** therefore equally applies to fusion implant **210**, but is not repeated here for brevity purposes.

[0142] As best shown in FIGS. **21** and **22**, the exemplary targeting member **250** includes at least one arm that couples to the exemplary at least one guide member **265** and the exemplary outrigger member **280**. In one embodiment, the targeting member **250**, the at least one guide member **265** and the outrigger member **280** are monolithic. The outrigger member **280** may include at least one aperture (not shown) extending longitudinally through the outrigger member **280** and defining an axis X**5**-X**5**. The at least one aperture of the outrigger member **280** is configured such that a bone anchor (not shown) can pass through the outrigger member **280**. A bone anchor may take any form capable of acting as a bone anchor. For example, the bone anchor may be a k-wire, screw, nail, or wire. The bone anchor aperture is thereby shaped and sized to accept at least one particular bone anchor, or vice versa. The outrigger member **280** may include a bushing (not shown) that selectively couples the outrigger member **280** to the bone anchor received within the bone anchor aperture. In some such embodiments, the bone anchor is coupled to a target fusion bone. In such a configuration, when the outrigger member **280** is coupled to the bone anchor via the bone anchor aperture and bushing, the targeting guide is orientated in a substantially similar orientation and position as compared to if the fusion member where implanted in the target bone along the bone apertures trajectory. In this way, the bone anchor, bone anchor aperture and bushing allow a user to selectively couple the exemplary targeting guide **200** in a position and orientation that simulates the targeting guide's **200** position and orientation if a cavity were formed along the bone anchor. As such, a surgeon can ensure proper positioning of the fusion implant cavity (which results in proper positioning of the targeting guide **200**) before the cavity is formed in the fusion target bone(s).

[0143] The outrigger member **280** may be coupled to the targeting member **250** by an arm extending from the outrigger member **280** to the targeting member **250**. In such arrangements, the arm coupling the outrigger member **280** and the targeting member **250** may be considered part of the targeting member **250**, part of the outrigger member **280**, or the targeting member **250** and the outrigger member **280** may both include a portion of the arm. As shown best in FIGS. **21** and **22**, the outrigger member **280** may couple to the first end **212** of the fusion implant **210**.

[0144] As shown in FIGS. **21** and **22**, the outrigger member **280** may include an end portion that is shaped and sized to receive therein, couple or mate with the first end **212** of the fusion implant **210**. Specifically, in the illustrated embodiment, the outrigger member **280** includes the shape of the fusion implant **210** (cylindrical) and an end profile that mimics or mirrors the profile of the first end **212** of the fusion member **210**, but in reverse. In such embodiments, the above described configuration of the first end **12** of the fusion member **10** equally applies to the configuration of the profile of the outrigger member **280**, but in a reversed or mirrored configuration so that the outrigger member **280** can mate with the first end **212**. As described above, the skewed or off-center profile or configuration of the first end **212** of the fusion member **210** allows the fusion member **210** to be coupled to such an outrigger member **280** in only two orientations—an "improper" orientation and a "proper" orientation. Further, the skewed or off-center profile or configuration of the first end **212** provides a visual or tactile indication when it is configured in an "improper" orientation with the outrigger member **280**, as compared with the "proper" orientation. In the illustrated embodiment, as the profile or configuration of the first end **212** of the fusion implant **210** and the end of the outrigger member **280** take skewed or off-center "V" shapes

(e.g., when viewed from the proximal or distal direction), with one leg of the "V" being longer than the other leg, the outer surfaces of the fusion member **210** and the outrigger member **280** will be skewed or otherwise not aligned when they are coupled or mated in the "improper" orientation. As shown in FIGS. **21** and **22**, the targeting instrument **200** includes the first end **212** of the fusion member **210** and the end of the outrigger member **280** coupled in the "proper" orientation, and the outer surfaces of the fusion member **212** and the outrigger member **280** are aligned and even.

[0145] Further, as described above, the first end **212** of the fusion implant **210** includes a threaded aperture **240** (see FIGS. **8-11**) extending longitudinally about the axis X-X of the fusion member **210**. Similarly, the outrigger member **280** includes an aperture (not shown) that extends longitudinally through the outrigger member **280** defining an axis X**5**-X**5**. The axis X**5**-X**5** of the aperture of the outrigger member **280** is configured to align with the axis X-X of the aperture of the first end **212** of the fusion member **210** when the fusion member **210** is coupled to the outrigger member **280** in the "proper" orientation. In such an orientation, as shown in FIGS. **21** and **22**, a threaded tightening bolt **282** can be received within the longitudinally extending aperture of the outrigger member **280** and into threaded engagement with the internal threading **242** (not shown) of the longitudinally extending aperture **240**. By including a stop surface configured to contact the outer surface of the outrigger member **280** opposing the first end **212** of the fusion member **210**, the tightening bolt **282** can be rotated and the first end **12** of the fusion member **210** pulled into engagement with the outrigger member **280**. Further rotation of the tightening bolt **282** will securely selectively couple the fusion member **210** to the outrigger member **280** in the "proper" orientation (because the axis X**5**-X**5** of the outrigger member **280** is aligned with the axis of the threaded aperture **240** of the fusion implant **210**, as explained below).

[0146] As described further below, by securing the fusion member **210** in such a predefined orientation, the aspects of the targeting instrument **200** can be designed or configured to align, cooperate or engage with particular aspects of the fusion implant **210**. For example, the off-center or skewed profile of the first end **212** of the fusion member **210**, as well as the profile of the end of the outrigger member **280**, will prevent the alignment of the longitudinally extending apertures of the outrigger member **280** and fusion member **210** when the outrigger member **280** and the fusion implant are coupled in the "improper" orientation (they will be askew). As such, the configuration or profile of the outrigger member **280** and first end **212** of the fusion implant **212** prevents the instrument **200** and the fusion implant **210** to be selectively or removably coupled to one another in any orientation other than the "proper" orientation via the threaded tightening bolt **282**.

[0147] The targeting member **250** may include a carriage rail **252** and a bone anchor carriage member **254** slidably attached thereto, as shown in FIGS. **21** and **22**. The exemplary illustrated carriage rail **252** extends linearly in a distal-proximal direction generally extending along the axes Z**1**-Z**1**, Z**2**-Z**2** and Z**3**-Z**3** of the internally threaded apertures **218**A-C (when the fusion implant **210** is coupled to the targeting instrument **200** in the "proper" alignment or orientation). As shown in FIGS. **22** and **23**, the carriage rail **252** may include external threading and a slot extending through the carriage rail **252** and the targeting member **250** along a substantial portion of the carriage rail **252** in the distal-proximal direction. The carriage rail **252** may also include a detent **255** that extends on both the lateral and medial sides of the carriage rail **252** and extends over at least a substantial portion of the carriage rail **252** in the distal-proximal direction, as shown in the illustrated embodiment FIGS. **22** and **23**. As the detent **255** is provided on both sides of the exemplary carriage rail **252**, the carriage rail **252** takes on a "T" shape in the illustrated embodiment. In some embodiments, the detent **255**, and therefore the carriage rail **252**, preferably defines a length in the distal-proximal direction of at least about 0.5 inch, and more preferably at least about 0.75 inch.

[0148] The carriage member **254** may be engaged to the carriage rail **252** through the detents **255**. For example, the carriage member **254** may be "C" shaped such that the carriage member **254** extends over the carriage rail **252** and into the detents **255** on both the medial and lateral sides of the carriage rail **252**. As stated above, the carriage member **254** may be a bone anchor carriage member **254**. For example, as show in FIGS. **23** and **24**, a bone anchor aperture is provided through the carriage member **254** and substantially aligned with the slot of the carriage rail **252**. In such embodiments, the aperture may be sized and shaped to allow a bone anchor to pass through the bone anchor aperture, through the slot of the carriage rail **252**, and into a target fusion bone below the targeting instrument **200**, as shown in FIG. **23**. In the illustrated embodiment, the bone anchor is an elongate, cylindrical pin **372** with a stop member that limits the dorsal-plantar extension of the pin **372**. Such a configuration may be advantageous as the pin **372** may thereby be configured to only penetrate the target fusion bone, and thereby prevented from otherwise damaging other anatomical structure and/or interfere with the distraction and compression features described below.

[0149] The exemplary illustrated carriage rail **252** and bone anchor carriage member **254** of the illustrated embodiment are configured to be selectively slidably engaged with each other. In the exemplary illustrated embodiment, the carriage rail **252** and/or the bone anchor carriage member **254** includes an externally threaded rotatable member **253** threadably engaged with the external threading off the carriage rail **252** and rotatably coupled to the bone anchor carriage member **254**. The rotatable member **253** includes an engageable head that allows a user to apply torque to the rotatable member **253** to rotate the rotatable member **253** with respect to the external threading of the carriage rail **252**. In this manner, as the rotatable member **253** is rotatably coupled to the bone anchor carriage member **254**, and rotation of the rotatable member **253** acts as a worm gear to drive the bone anchor carriage member **254** along the carriage rail **252** and within the detents **255** in a distal-proximal direction. The position of the bone anchor carriage member **254** shown in FIGS. **21** and **22** can be considered a neutral location because the rotatable member **253** can be rotated either clockwise or counterclockwise to translate the bone anchor carriage member **254** in either of a distal direction or a proximal direction. As explained further below, translation of the bone anchor carriage member **254** may result in translation of a target fusion bone coupled to the bone anchor carriage member **254** via a pin **372** or other bone anchor.

[0150] As shown in FIGS. **21** and **22**, a resection guide **246** may be provided on the target instrument **200**. In the illustrated embodiment, an exemplary resection guide **246** is provided on an arm extending from the targeting member **250** to

the outrigger member **280**. The exemplary resection guide **246** is selectively secured to the arm via a thumb screw **246**. In such embodiments, the thumb screw **246** can be rotated within the resection guide **246** and into, or out of, abutment with the arm. Thereby, the thumb screw **246** can apply a compressive force to the arm to selectively couple the resection guide **246** to the arm. The exemplary illustrated resection guide **246** is configured to provide two planar parallel resection guide surfaces positioned in a dorsal direction over the joint of the target fusion bones. As such, and as described further below, the resection guide **246** can be positioned via the thumb screw **248** to a position such that at least one of the resection guide surfaces is dorsally located over a proximal portion of one of the target fusion bones, and the resection guide surfaces can facilitate resection of the proximal portion of the respective target fusion bone.

[0151] As illustrated in FIGS. **21** and **22**, the guide members **265**A-C may be coupled to the targeting member **250** by an arm extending from the guide members **265**A-C to the targeting member **250**. In such arrangements, the arm coupling the guide members **265**A-C and the targeting member **250** may be considered part of the targeting member **250**, part of the guide members **265**A-C, or the targeting member **250** and the guide members **265**A-C may both include a portion of the arm. As shown in FIGS. **21** and **22**, constructs including multiple guide members **265** may include multiple arms coupling the guide members **265** to the targeting member **250**.

[0152] In the illustrated embodiments, the targeting instrument **200** includes three guide members **265**A-C corresponding to the internally threaded apertures **18**A-C of the fusion implant **210** that are spaced in a proximal-distal direction from the outrigger member **280** and the fusion implant **210** coupled thereto. The guide members **265**A-C are also spaced from one another along the medial-lateral direction. The guide members **265**A-C define tubes or barrels that include elongate laterally extending guide apertures **268**A-C defining axes that extend generally in a proximal-distal direction, as discussed further below. The spacing and the arrangement of the guide members **265**A-C corresponds to, or is dictated at least in part by, the positioning and orientation of the internally threaded apertures **218**A-C, as described further below

[0153] As shown in FIGS. **21** and **22**, a first guide member **265**A defines a first laterally or proximally extending guide aperture **268**A defining an axis Z**3**-Z**3**, a second guide member **265**B defines a second laterally or proximally extending guide aperture **268**B defining an axis Z**4**-Z**4**, and a third guide member **265**C defines a third laterally extending guide aperture **268**C defining axes Z**5**-Z**5**. The target instrument **200** is preferably configured such that, when the fusion implant is coupled in the first or "proper" orientation with the outrigger member **280**, the first guide aperture **268**A corresponds to the first internally threaded aperture **18**A, the second guide aperture **268**B corresponds to the second internally threaded aperture **18**B, and the third guide aperture **268**C corresponds to the third internally threaded aperture **18**C, as shown in FIGS. **21** and **22**. More specifically, the target instrument **200** is preferably configured such that when the fusion implant is coupled in the first or "proper" orientation with the outrigger member **280**, the axis Z**4**-Z**4** of the first guide aperture **268**A is aligned with the axis Z**1**-Z**1** of the first internally threaded aperture **218**A of the fusion implant **210**, the axis Z**5**-Z**5** of the second guide aperture **268**B is aligned with the axis Z**2**-Z**2** of the second internally threaded aperture **218**B of the fusion implant **210**, and the axis Z**5**-Z**5** of the third guide aperture **268**C is aligned with the axis Z**3**-Z**3** of the third internally threaded aperture **218**C of the fusion implant **210**, as shown in FIGS. **21** and **22**. In such an embodiment, at least the positioning and orientation of the first, second and third guide apertures **268**A-C are thereby dependent upon the positioning and orientation of the first, second and third internally threaded apertures **218**A-C, respectively, of the fusion implant **210**, or vice versa. As such, when the targeting instrument **200** includes the fusion implant **10** of FIGS. **1-8** and **12-16** coupled in the "proper" orientation, at least the above described configuration, orientation and positions of the internally threaded apertures **18**A-C and their respective axes Z**1**-Z**1**, Z**2**-Z**2** and Z**3**-Z**3** equally applies to the guide apertures **268**A-C and their respective axes Z**3**-Z**3**, Z**4**-Z**4** and Z**5**-Z**5**, but is not repeated herein for brevity purposes.

[0154] In such an arrangement, as illustrated in FIGS. **21** and **22**, the guide apertures **268**A-C of the respective guide members **265**A-C can facilitate the drilling of cavities through bone to the respective internally threaded apertures **218**A-C of the fusion implant **210**. For example, as show in FIGS. **21** and **22**, the guide members **265**A-C are proximally spaced from the fusion implant **210** along the axes Z**1**-Z**1**, Z**2**-Z**2** and Z**3**-Z**3** of the internally threaded apertures **218**A-C, and therefore the axes Z**3**-Z**3**, Z**4**-Z**4** and Z**5**-Z**5** of the guide apertures **268**A-C of the guide members **265**A-C. In such a spaced relationship, when the fusion implant **210** is coupled to the outrigger member **280** in the "proper" orientation and inserted into a fusion implant cavity in a first target fusion bone, for example, the targeting instrument **200**, and therefore the fusion implant **210**, can be rotated about the longitudinal axis X-X of the fusion implant **210** and into an orientation such that at least a second target fusion bone adjacent the first target fusion bone are positioned between the fusion implant **201** and the guide member **265**A-C, as shown in FIGS. **23** and **24**. The fusion implant **210** may then be inserted into the implant cavity, via rotation, facilitated by the first and second external threaded portions **220**A, **220**B of the body **216**. At this stage, the targeting instrument **200** and fusion implant **210** may then be secured to the second target fusion bone utilizing a pin **372** and the above described carriage rail **252** and bone anchor carriage member **254**.

[0155] As shown best in FIGS. **23** and **24**, once the fusion implant **210** is coupled within the cavity of the first target bone, and the targeting instrument **200** is otherwise aligned with the first and second target fusion bones, the targeting instrument **200** may be coupled to the second target fusion bone through the bone anchor carriage member **254** carried on the carriage rail **252** of the targeting member **250** of the fusion implant **210** via a bone anchor. In the illustrated embodiment, the bone anchor is an elongate pin **372** with a stop. In some embodiments, the pin **372** may be a 1.6 millimeter k-wire with a stop.

[0156] As shown best in FIG. **23**, the pin **372** can be inserted into the bone anchor aperture of the bone anchor carriage member **254**, passed through the slot of the carriage rail **252** and targeting member **250**, and implanted into the second targeting bone. The stop of the pin **372** may be configured to prevent the pin from passing through the second target fusion bone. In such a configuration, the guide instrument **200** is coupled to the first target bone via the fusion implant **210** being threadably engaged in the implant cavity, and the guide instrument **200** is coupled to the second target bone via the pin **375** and the bone anchor carriage member **254**.

[0157] As described above, the bone anchor carriage member **254** may be slidable or translatable along the carriage rail **252** by the externally threaded rotatable member **253** threadably engaged with the external threading off the carriage rail **252** and rotatably coupled to the bone anchor carriage member **254**. As such, as described above, the rotatable member **253** can be rotated such that the bone anchor carriage member **254** is translated distally, the pin **372** translated distally thereby, and the second target fusion bone also thereby translated distally to distract the joint between the first and second target fusion bones. During distraction, as described above, the proximal portion of the second target fusion bone may be resected through the use of the resection guide **246**. After resection, the rotatable member **253** can be rotated such that the bone anchor carriage member **254** is translated proximally, the pin **372** is translated proximally thereby, and the second target fusion bone is also translated proximally thereby to compress the joint between the first and second target fusion bones. Both the first and second target fusion bones may be prepared for fusion via resection, as described further below. The compression of the joint between the first and second target fusion bones may be maintained by the targeting instrument **200** until the fusion members **50** are inserted into the first and second target fusion bones and the fusion implant **210** to permanently or semi-permanently compress the joint and achieve, or at least facilitate, fusion of the first and second target fusion bones.

[0158] In such a configuration or orientation, drill bushings **270**A-C may be coupled to respective guide apertures **268**A-C, as shown in FIGS. **21-24**. The second drill bushing **270**B corresponding to the second guide aperture **268**A-C is not shown for exemplary purposed only. The drill bushings **270**A-C preferably define laterally extending apertures of a diameter less than the diameter of the guide members **265**A-C, and apertures defining axes that are aligned with the axes Z**3**-Z**3**, Z**4**-Z**4** and Z**5**-Z**5** of the guide apertures **268**A-C. In such an arrangement, the axes of the drill bushings **270**A-C align with the axes Z**1**-Z**1**, Z**2**-Z**2**, Z**3**-Z**3** of the internally threaded apertures **218**A-C of the fusion member **210**. As such, a drill bit can be inserted into the drill bushings **270**A-C, and the drill bushings **270**A-C used to guide the drill bit through the first and second target fusion bones to the internally threaded apertures **218**A-C of the fusion member **210**.

[0159] As the distance along the axes Z**3**-Z**3**, Z**4**-Z**4**, Z**5**-Z**5** of the guide apertures **268**A-C between the internally threaded apertures **218**A-C of the fusion member **210** and the outer edges of the guide members **256**A-C, for example, are constant distances, a depth gauge (not shown) can be inserted into the guide members **256**A-C before the drill bushings **270**A-C are coupled thereto and used to determine the distance between such a fixed point and the internally threaded apertures **218**A-C of the fusion member **210**. Based on the depth reading taken from the depth gauge, particular drill bushings **270**A-C providing a stop surface corresponding to the depth of the internally threaded apertures **218**A-C of the fusion member **210** being used may be inserted into the guide members **256**A-C before the drilling process. Then, during the drilling process, the drill bit **290** may be guided by the particular drill bushings **270**A-C and particular drill bushings **270**A-C to the stop, such that the tip of the drill bit is extended to the internally threaded apertures **218**A-C of the fusion member **210**. It is noted that tolerances involved in the machining and manufacturing process may result in the drill bit coming very close to the internally threaded apertures **218**A-C, such as about 2 millimeters away, or the drill bit may enter the internally threaded apertures **218**A-C slightly.

[0160] Once the drilling process is complete, the drill bushings **270**A-C may be removed from the guide members **256**A-C. A fusion member, such as the exemplary bone screw **50** described above, may then be inserted into each of the guide members **256**A-C and guided thereby into the fusion member cavities corresponding to the internally threaded apertures **218**A-C of the fusion member **210**. A driver may then be used to rotatably advance fusion members **50**A-C into the target fusion bones and, eventually, into threaded engagement with the internally threaded apertures **218**A-C of the fusion member **210**. As described above, the configuration of the internally threaded apertures **218**A-C and bone fusion members **50** will act to pull the target fusion bones together upon rotation of the fusion members **50** within the internally threaded apertures **218**A-C. Further, depending upon the level of rotation of the fusion members **50**, the fusion members **50** may apply a compressive force to the joint between the targeting fusion bones after the adjacent surfaces of the target fusion bones have been pulled together.

[0161] A surgical method for fusing target fusion bones will now be described. The method utilizes some of the devices, instruments, features, aspects, components and the like described above, and therefor reference will be made to the above described embodiments, such as the illustrated embodiments presented in the figures and discussed above. However, such references are made for exemplary purposes only and are not intended to limit the surgical method beyond the specifically recited steps. Further, the surgical method may be discussed under the umbrella of particular bones, but such an application is not intended to be limiting and the method described herein may be used or conducted with bones or other tissue not specifically discussed herein without departing from the spirit and scope of the surgical method.

[0162] Assuming two adjacent, potentially spaced, bones were targeted for fusion, a fusion implant, such as fusion implant **10**, **210**, and fusion members, such as fusion member **50**, may be used to fuse the bones to one another. For example, in reference to the bones of the foot or ankle, the medial or transverse cuneiform and the first metatarsal bones may be the fusion target bones. As the medial or transverse cuneiform and the first metatarsal bones are being used for exemplary purposes only, the generic term "first target fusion bone" or simply "first target bone" may be used hereinafter to refer to the medial or transverse cuneiform bone, or any other bone that includes similar features, positioning, orientation, function or the like. Similarly, the generic term "second target fusion bone" or simply "second target bone" may be used hereinafter to refer to the first metatarsal bone, or any other bone that includes similar features, positioning, orientation, function or the like.

[0163] In order to implant the fusion implant **10**, **210** into the first target fusion bone, an implant cavity will first be formed in a dorsal-plantar orientation in the first target fusion bone. It is preferable that the implant fusion cavity be formed in an intermediate position in the first target bone in respect to the medial-lateral and proximal-distal directions. This positioning may be particularly advantageous if the location is predetermined in some respect such that the fusion implant **10**, **201**, fusion members **50** and/or the targeting instrument **200** can be configured, designed or arranged so that an effective fusion construct results. For example, the predefined location may determine the length of the fusion members **50**,

such as the axial lengths of the first threaded portion **56**, the non-threaded portion **58** and/or the second threaded portion **60**.

[0164] The method of forming the implant fusion cavity in the first target bone may include usage of the above described surgical guide instrument **100**, as shown in FIGS. **19** and **20**. In some embodiments, the joint of the first and second target fusion bones is exposed. In some such embodiments, the first and second bones are separated. For example, an osteotome may be slipped into the joint to free up soft tissues in the joint, such as soft tissue in the plantar aspect of the joint. Once the joint between the target fusion bones is exposed and separated, the surgical guide instrument **100** may be applied to the target bones to form the fusion implant cavity.

[0165] In some embodiments, the dorsal abutment surface **110** of the surgical guide **100** is abutted against a dorsal surface of the first target bone, thereby coupling the guide member **106** and the aperture **109** therein to the dorsal surface of the first bone. In some such embodiments, the lateral abutment surface **118** of the surgical guide **100** is abutted against a lateral surface of the first target bone and the distal abutment surface **114** is abutted against a distal surface of the first target bone. The lateral abutment surface **118** and distal abutment surface **114** may be configured with respect to the first target bone such that the abutment of the lateral and distal abutment surfaces **118**, **114** against respective surfaces of the first target bone result in a positioning of the guide member **106** and the aperture **109** therein in a intermediate position in the medial-lateral and distal-proximal direction on the dorsal surface of the first bone.

[0166] In such a configuration, the guide member **106** and the aperture **109** therein may be utilized by inserting a bone anchor therethrough and into the medial-lateral and distal-proximal intermediate location of the first target bone. In one embodiment, the bone anchor is a k-wire. The surgical guide **100** may thereby be coupled to the first target bone. During such a coupling state, the resection slot **120** extending in a medial-lateral direction and proximally spaced from the distal abutment surface **114** can be utilized to resect a distal portion of the first target bone to prepare the distal surface for fusion with the second target bone thereto.

[0167] After the resection of the distal portion of the first target bone is completed (if the step is performed), the surgical guide **100** may be removed from the first target bone, but the bone anchor left therein. The targeting instrument **200** may then be selectively coupled to the bone anchor via the outrigger member **280**. The alignment of the internally threaded apertures **18**A-C and the fusion members **50**A-C potentially coupled thereto may then visually checked by viewing the position and orientation of the guide members **265** of the targeting instrument **200**, for example. If the axis of the guide members **265** (and therefore the internally threaded apertures **18**A-C and the fusion members **50**A-C) are aligned through substantially intermediate aspects of the first and second target bones, for example, the targeting instrument **200** may be removed from the bone anchor and the bone anchor used to form a fusion implant cavity about the bone anchor. For example, in one embodiment, a cannulated drill bit is applied to the bone anchor, and the drill bit is used to form a fusion implant cavity sized and shaped to correspond to the fusion implant **10**, **210** in the first target bone.

[0168] Once the implant cavity in the first target bone is formed, a fusion implant **10**, **210** may be prepared for insertion into the cavity. The method for preparing the fusion implant **10**, **210** for insertion into the implant cavity may include the step of coupling the fusion implant **10**, **210** to an instrument, such as the targeting instrument **200**, in a predefined first or "proper" orientation, as shown in FIGS. **21**-**24**. The predefined orientation may result from the profile of the second end **14**, **214** of the fusion member **10**, **210** and/or the profile of the end of the outrigger member **280**. In some embodiments, coupling the fusion implant **10**, **210** to the targeting instrument **200** includes the step of orienting the fusion implant **10**, **210** and the outrigger member **280** of the targeting instrument **200** with respect to each other such that the first end **12**, **212** of the fusion implant **10**, **210** is properly mated with the end of the outrigger member **280** of the targeting instrument **200**. In some such embodiments, such a step may include orienting the fusion implant **10**, **210** with respect to the outrigger member **280** such that the first end **14**, **214** of the fusion implant **10**, **210** and the end profile of the outrigger member **280** mate and a visual or tactile indication indicating a incorrect orientation is not present. In some embodiments, such an orienting step may include orienting the fusion implant **10**, **210** with respect to the outrigger member **280** such that longitudinally extending apertures in the first end **14**, **214** of the fusion implant **10**, **210** and the outrigger member **280** are aligned.

[0169] In some embodiments, once the fusion implant **10**, **210** and the outrigger member **280** are mated in the first or "proper" predefined orientation, the fusion implant **10**, **210** and the outrigger member **280** are selectively coupled to each other in the orientation. Coupling the fusion implant **10**, **210** and the outrigger member **280** in the predefined orientation may include the step of inserting a threaded tightening bolt **282** into the outrigger member **280** aperture and the aperture **40**, **240** of the fusion implant **10**, **210**. The threaded tightening bolt **282** may be rotatably inserted into the aperture **40**, **240** of the fusion implant **10**, **210**, and the further rotated to pull the first end **14**, **214** of the fusion implant **10**, **210** into the end of the outrigger member **280** to selectively couple the fusion implant **10**, **210** and the outrigger member **280**.

[0170] Coupling the fusion implant **10**, **210** and the outrigger member **280** to one another in the first orientation may include the step of aligning the internally threaded apertures **18**A-C, **218**A-C of the fusion implant **10**, **210** with apertures **268**A-C of the guide members **265**A-C of the targeting instrument **200**, such as aligning the axes Z**1**-Z**1**, Z**2**-Z**2** and Z**3**-Z**3** of the internally threaded apertures **18**A-C, **218**A-C of the fusion implant **10**, **210** with the axes Z**4**-Z**4**, Z**5**-Z**5** and Z**6**-Z**6** of the apertures **268**A-C of the guide members **265**A-C of the targeting instrument **200**, as shown in FIGS. **21**-**24**.

[0171] Once the fusion implant **10**, **210** and the outrigger member **280** are coupled to one another, the fusion implant **10**, **210** may be inserted into the implant cavity formed in the first target fusion bone, as shown in FIGS. **23** and **34**. In some embodiments, the fusion member **10**, **210** is positioned in the implant cavity by rotating the fusion member **10**, **210** and targeting instrument **200** coupled thereto about the longitudinal axis X-X of the body **16**, **216** of the fusion implant **10**, **210** such that the second threaded portion **20**B, **220**B threadably engages the boney walls of the implant cavity and threadably advancing along the longitudinal axis X-X into the cavity thereby. The insertion step may further include rotatably engaging the first threaded portion **20**A, **220**A with the boney walls of the implant cavity and threadably advancing the fusion implant **10**, **210** along the longitudinal axis X-X into the cavity thereby.

[0172] Once the fusion implant **10**, **210** in fully implanted into the fusion cavity of the first target bone, the targeting instrument **200** may be positioned such that the axes Z**4**-Z**4**, Z**5**-Z**5** and Z**6**-Z**6** of the apertures **268**A-C of the guide members **265**A-C of the targeting instrument **200** pass through intermediate portions of the first and second target bones in the dorsal-plantar, medial-lateral and proximal-distal directions. After the fusion implant **10**, **210** and targeting instrument **200** are properly positioned, the targeting instrument **200** may be coupled to the second target bone.

[0173] The second target bone may be coupled to the bone anchor carriage member **254** of the targeting instrument **200** via a bone anchor **272**. For example, the bone anchor carriage member **254** may first be translated to an intermediate position in the distal-proximal direction along the carriage rail **250** by rotation of the rotatable member **253**, as shown in FIGS. **21** and **22**. Once in the intermediate position in the distal-proximal direction, the bone anchor **272** may be inserted into the bone anchor aperture of the bone anchor carriage member **254**, through the slot provided in the carriage rail **250**, and into the second target bone, as shown in FIGS. **23** and **24**. The rotatable member **253** may then be rotated such that the bone anchor carriage member **254**, the bone anchor **272** coupled thereto, and the second target bone coupled to the bone anchor **272** are translated along the distal-proximal direction such that the joint between the first and second target bones is distracted.

[0174] After the joint between the first and second target bones is distracted, the resection guide **246** provided on the targeting instrument **200** can be utilized to resect a proximal portion of the second target bone to prepare the proximal surface for fusion with the prepared distal surface of the second target bone thereto. Once the distal surface of the second target bone is prepared for fusion via resection, the rotatable member **253** may then be rotated such that the bone anchor carriage member **254**, the bone anchor **272** coupled thereto, and the second target bone coupled to the bone anchor **272** are translated along the distal-proximal direction such that the joint between the first and second target bones is compressed.

[0175] Once the joint between the first and second target bones is compressed by the targeting instrument **200**, fusion member cavities may be formed in the first and second target bones to the internally threaded apertures **18**A-C, **218**A-C of the fusion implant **10**, **210**. Before the fusion member cavities are formed, a depth gauge may be inserted into the guide members **256**A-C to determine the depth of the internally threaded apertures **18**A-C, **218**A-C of the fusion implant **10**, **210**, and therefore the proper length that the cavities should be drilled to and how far the fusion members **50**A-C should be advanced into the cavities.

[0176] In some embodiments, after the depth gauges are used to determine the proper lengths of the fusion member cavities, particular drill bushings **270**A-C configured to stop the drill drilling process at the correct depths are inserted into the guide apertures **268**A-C of the guide members **256**. In some embodiments, a drill and drill bit are guided by the drill bushings **270**A-C to created fusion member apertures in the first and second target bones to the internally threaded apertures **18**A-C, **218**A-C. In some such embodiments, the fusion member apertures may be spaced about 2 millimeters or less from the internally threaded apertures **18**A-C, **218**A-C.

[0177] In some embodiments, once the fusion member apertures are formed, the fusion members **50**A-C are inserted and driven into the cavities. In some embodiments, the fusion members **50** are rotatably inserted into the cavities such that the first externally threaded portion **56** including the first thread lead is threadably coupled to the internally threaded apertures **18**A-C, **218**A-C of the fusion implant **10**, **210**, as shown in FIGS. **17** and **18**. In some such embodiments, the second externally threaded portion **60** is engaged with the second target bone, as also shown in FIGS. **17** and **18**. In some embodiments, the non-threaded portion **58** spans the compressed joint between first and second target bones, as shown in FIGS. **17** and **18**.

[0178] In some embodiments, insertion of a fusion members **50**A-C into the first internally threaded apertures **18**A-C, **218**A-C substantially eliminates any space between the adjacent surfaces of the first and second target bones. In some such embodiments, the fusion members **50**A-C applies a permanent or semi-permanent compressive force to the joint between the prepared surfaces of first and second target bones.

[0179] One advantage of the embodiments discussed herein of the present invention is that the fusion implants and associated fusion members draw adjacent spaced bones together. Another advantage of the fusion implants and associated fusion members of the embodiments discussed herein is that they apply a compressive force to the joint of abutting bones. Another advantage of the fusion implant, instruments and methods discussed herein is that they provide consistent, repeatable alignment between the fusion member, target fusion bones and fusion processes, such as securement and drilling processes. Another advantage of the fusion implant, instruments and methods discussed herein is that the target fusion bones are secured such that a predetermined orientation or positioning of the fusion implant and associated fusion members is consistently achieved.

[0180] The fusion implants, fusion members, fusion devices, constructs, instruments and methods disclosed herein may include one or more features of the fusion implants, fusion members, fusion devices, constructs, instruments and methods disclosed and/or claimed in the following co-pending patent application that is assigned to the assignee of the present invention and is hereby expressly incorporated by reference in its entirety as part of the present disclosure: the International PCT Patent Application filed on even date herewith, Attorney Docket No. 3132.042AWO, and entitled "Upper Extremity Fusion Devices and Methods."

[0181] As may be recognized by those of ordinary skill in the pertinent art based on the teachings herein, numerous changes and modifications may be made to the above-described and other embodiments of the present invention without departing from the spirit of the invention as defined in the claims. For example, the particular devices, instruments, constructs and methods discussed herein with respect to particular bones may be used with other bones or tissue to achieve advantageous fusion. As another example, particular aspects or features described or illustrated herein as integral may be made from individual separate components. Similarly, particular aspects or features described or illustrated herein as individual separate components may be combined into an integral unit. As another example, the threading described herein may take any thread form known in the art that differs from the described or illustrated threading. As another example, any aspect of the devices discussed herein that may be temporarily or permanently implanted into a patient may include a texture, coating, surface finish or the like to facilitate

coupling of the aspect with the patient. As another example, the fusion members may include at least one aperture configured to facilitate other fusion members from attaching or coupling thereto. Therefore, the implants, fusion devices or constructs disclosed herein may include at least one fusion member coupled to at least one other fusion member. As yet another example, the fusion implants, fusion members, fusion devices, constructs, instruments and methods discussed herein may be configured to facilitate fusion of more than two bones, whether naturally adjacent or not. For example, the implants may be configured for implantation, at least partially into two or more bones. Similarly, for example, the fusion members may be configured to pass through, at least partially, two or more bones. As another example, fusion devices, constructs, instruments and methods discussed herein may be configured for use with one fusion member, or more than one fusion members, such as more than three fusion members. As such, the number of internally threaded apertures disclosed herein may differ. Further, the fusion devices, constructs, instruments and methods discussed herein may be configured with implants with non-threaded apertures for coupling bone anchors through at least one bone and through the non-threaded aperture to stabilize the implant with the at least one bone. As another example, the targeting instrument disclosed herein may be configured to interact with, and include, a bone anchor clamp.

[0182] Accordingly, this detailed description of the illustrated and exemplary embodiments of the present invention is to be taken in an illustrative, as opposed to a limiting sense.

What is claimed is:

1. A fusion device for use with bones of a lower extremity, the fusion device including:

a fusion implant configured for implantation into a cavity in at least one bone, the fusion implant including:

a first end including an attachment mechanism configured to couple with an instrument in a predefined first orientation;

a second end substantially opposing the first end; and

a body extending longitudinally between the first end and the second end and defining a longitudinal axis, a first portion of the body adjacent the first end and a second portion of the body adjacent the second end including exterior threading, an intermediate portion of the body between the first portion and the second portion including a non-threaded exterior surface, the body further including at least two internally threaded apertures including a first thread lead extending laterally through the body, the at least two internally threaded apertures including a first threaded aperture proximate the first end and extending linearly from a first side surface to a second side surface of the medial portion and defining a first lateral axis, and a second threaded aperture proximate the second end and extending linearly from a third side surface to a fourth side surface of the medial portion and defining a second lateral axis, the first side surface and the third side surface being spaced about the longitudinal axis of the body; and

at least two longitudinally extending bone fusion members including a tip, a head and a body extending longitudinally between the tip and the head, the body including:

a first externally threaded portion adjacent the tip including the first thread lead and being otherwise configured to couple to the at least two threaded apertures of the body of the fusion implant;

a second externally threaded portion adjacent the head including a second thread lead that is less than the first thread lead and an external taper extending from the head to the tip; and

a non-threaded portion extending between the first and second externally threaded portions.

2. The fusion device of claim **1**, wherein the first side surface and the third side surface are spaced about the longitudinal axis of the body by at least about 10 degrees.

3. The fusion device of claim **1**, wherein the first internally threaded aperture is oriented such that the first lateral axis angles away from the first end as it extends from the first side surface to the second side surface.

4. The fusion device of claim **1**, wherein the second internally threaded aperture is oriented such that the second lateral axis angles toward the second end as it extends from the third side surface to the fourth side surface.

5. The fusion device of claim **4**, wherein the first internally threaded aperture is oriented such that the first lateral axis angles toward the first end as it extends from the first side surface to the second side surface.

6. The fusion device of claim **1**, wherein the at least two internally threaded apertures further include a third internally threaded aperture positioned between the second internally threaded aperture and the second end, the third internally threaded aperture extending linearly from a fifth side surface to a sixth side surface and at least partially through the second threaded portion and defining a third lateral axis.

7. The fusion device of claim **6**, wherein the fifth side surface is spaced between the first side surface and the third side surface about the longitudinal axis of the body.

8. The fusion device of claim **7**, wherein the angle between the first lateral axis of the first internally threaded aperture and the longitudinal axis of the body adjacent the first side surface and first end of the body is within the range of about 77 degrees to about 94 degrees, the angle between the second lateral axis of the second internally threaded aperture and the longitudinal axis of the body adjacent the third side surface and first end of the body is within the range of about 69 degrees to about 83 degrees, and the angle between the third lateral axis of the third internally threaded aperture and the longitudinal axis of the body adjacent the third side surface and first end of the body is within the range of about 55 degrees to about 69 degrees.

9. The fusion device of claim **1**, wherein the first threaded portion and the non-threaded portion of the at least two bone fusion members define a first outer diameter, and the second threaded portion of the at least two bone fusion members defines a second outer diameter adjacent the head that is greater than the first outer diameter.

10. A surgical instrument for use in obtaining fusion in a lower extremity of a patient, the instrument including:

a fusion implant including a first end, a second end and a body extending longitudinally therebetween defining a first axis, the body including external threading adjacent the first end and second end and at least one internally threaded laterally extending bone fusion member aperture defining a second axis;

a frame member including at least one arm and a translatable bone anchor carriage member including an aperture configured to receive a bone anchor therein, the translatable bone anchor carriage member configured to

translate a bone anchor received within the aperture with respect to the fusion implant;

an outrigger member coupled to the at least one arm of the frame member and securely removably coupled to the first end of the fusion implant in a first orientation of the fusion implant; and

at least one guide member coupled to the at least one arm of the frame member and including an aperture extending through the at least one guide member defining a third axis,

wherein the outrigger member and the at least one guide member are configured such that the second axis of the bone fusion member aperture of the fusion implant and the third axis of the aperture of the at least one guide member are substantially aligned in the first orientation of the fusion implant.

11. The surgical instrument of claim **10**, wherein the at least one arm of the frame member includes at least a first arm extending from the frame member to the outrigger member, and a second arm extending from the frame member to the at least one guide member.

12. The surgical instrument of claim **11**, wherein the first arm and the second arm are configured to fixedly space the outrigger member and the at least one guide member from each other along the first axis of the fusion implant and along the third axis of the aperture of the at least one guide member.

13. The surgical instrument of claim **12**, further including a resection guide including two linear parallel spaced resection guide surfaces, wherein the resection guide is selectively slidably coupled to the first arm, and the first arm is configured to position the resection guide surfaces of the resection guide above the third axis of the aperture of the at least one guide member and between the at least one guide member and the fusion implant.

14. The surgical instrument of claim **10**, wherein the outrigger member and the first end of the fusion implant are configured to be securely removably coupled to one another in only the first orientation.

15. The surgical instrument of claim **10**, wherein the outrigger member and the first end of the fusion implant are configured to provide a visual or tactile indication when they are coupled to one another in an orientation different than the first orientation.

16. The surgical instrument of claim **10**, wherein the frame member includes a carriage rail including external threading and a slot extending through the carriage rail and the frame member adjacent to the external threading, and wherein the bone anchor carriage member is slidably coupled to the carriage rail, the aperture of the carriage member is aligned with the slot of the carriage rail and frame member, and the carriage member includes an externally threaded rotatable member threadably engaged with the external threading off the carriage rail such that rotation of the externally threaded rotatable member slidably translates the carriage member along the carriage rail and the aperture of the carriage rail along a length of the slot of the carriage rail and frame member

17. A surgical guide instrument for use in preparing a bone for a fusion device for obtaining bone fusion in a lower extremity of a patient, the instrument comprising:

a base member defining a top surface and an opposing dorsal abutment surface configured to engage a dorsal surface of a first target bone, the base member further including a longitudinally extending aperture extending through an intermediate portion of the base member configured to accept a bone anchor therethrough and defining a longitudinal axis;

a distal positioning tab extending from a distal portion of the dorsal abutment surface of the base member and including a distal abutment surface configured to engage a distal surface of the first target bone and being distally spaced from the longitudinal axis of the longitudinally extending aperture of the base member; and

a lateral positioning tab extending from a lateral portion of the dorsal abutment surface of the base member and including a lateral abutment surface configured to engage a lateral surface of the first target bone and being laterally spaced from the longitudinal axis of the longitudinally extending aperture of the base member,

wherein the distal spacing of the distal positioning tab and the lateral spacing of the lateral positioning tab from the longitudinal axis of the longitudinally extending aperture positions the longitudinal axis of the longitudinally extending aperture in an intermediate position of the first target bone with respect to the in the medial-lateral and distal-proximal directions when the dorsal abutment surface is in abutment with a dorsal surface of a first target bone, the lateral abutment surface is in abutment with a lateral surface of a first target bone, and the distal abutment surface is in abutment with a distal surface of a first target bone.

18. The surgical guide instrument of claim **16**, wherein the base member includes a resection slot extending in a medial-lateral direction and proximally spaced from the distal abutment surface of the distal positioning tab, the resection slot facilitating resection of a distal portion of the first target bone when a bone anchor is received within the longitudinally extending aperture of the base member and the first target bone.

19. A surgical method for fusing bones, the method comprising:

drilling an implant aperture extending at least partially through a first bone;

removably coupling a first end of a fusion implant including at least one internally threaded bone fusion member aperture including a first thread lead to a surgical instrument in a first predefined orientation dictated by the configuration of at least one of the first end of the fusion implant and the surgical instrument;

rotatably inserting the fusion implant within the implant aperture at least partially through the first bone such that the at least one internally threaded bone fusion member aperture is positioned within the first bone and external threading of the fusion implant is engaged with the first bone;

coupling a first portion of a first bone anchor to a bone anchor carriage member that is translatably coupled to the surgical instrument and coupling a second portion of the first bone anchor to a second bone that is disposed adjacent the first bone to couple the carriage member and the second bone to the first bone anchor;

translating the bone anchor carriage member in a first direction to translate the second bone away from the first bone to distract the joint between the first bone and second bone;

translating the bone anchor carriage member in a second direction that opposes the first direction to translate the second bone into contact with the first bone such that

adjacent prepared surfaces of the first bone and second bone are compressed against each other;

positioning a first elongated aperture defining a first axis provided on the surgical instrument proximate the second bone;

positioning a drill bit within the first elongated aperture provided on the surgical instrument and drilling along the first axis to form a bone fusion member aperture extending through the second bone and at least partially through the first bone to at least the at least one internally threaded bone fusion member aperture of the fusion implant; and

rotationally inserting a first bone fusion member including a first externally threaded portion including the first thread lead adjacent a tip of the member and a second externally threaded portion of a second thread lead that is less than the first thread lead adjacent a head of the member into the bone fusion member aperture such that the first externally threaded portion is threadably engaged with the at least one internally threaded bone fusion member aperture, the second externally threaded portion is engaged with the second bone, and the fusion implant and the first bone fusion member apply a compressive force to the joint between the adjacent prepared surfaces of the first bone and the second bone to facilitate fusion therebetween.

20. The surgical method of claim **19**, wherein the step of drilling an implant aperture includes the steps of:

abutting a dorsal abutment surface of a surgical guide against a dorsal surface of the bone, abutting a lateral abutment surface of the surgical guide against a lateral surface of the first bone, and abutting a distal abutment surface of the surgical guide against a distal surface of the first bone;

inserting a second bone anchor through an aperture of the guide member that is spaced in a plantar direction from the dorsal abutment surface, spaced in medial direction from the lateral abutment surface, and spaced in proximal direction from the distal abutment surface, into a portion of the first bone member that is intermediate in the medial-lateral and distal-proximal directions;

removing the surgical guide from the first bone and the second bone anchor;

drilling along the second bone anchor with a cannulated drill bit to form the implant aperture in an intermediate portion of the first bone in the medial-lateral and distal-proximal directions; and

removing the second bone anchor from the first bone.

21. The surgical method of claim **20**, wherein the surgical method includes the following method steps:

utilizing a slot provided in the surgical guide to resect a portion of the first bone to form a substantially planar prepared bone surface adjacent the second bone after the second bone anchor is inserted into the first bone; and

utilizing a resection guide surface of a resection guide provided on the surgical instrument to resect a portion of the second bone to form a substantially planar prepared bone surface adjacent the first bone after the after the joint between the first bone and second bone is distracted.

* * * * *