US 20050066209A1

(19) United States

(12) Patent Application Publication

(10) Pub. No.: US 2005/0066209 A1

(43) Pub. Date: Mar. 24, 2005

Kee et al.

(54) PORTABLE ELECTRONIC DEVICE HAVING HIGH AND LOW POWER PROCESSORS OPERABLE IN A LOW POWER MODE

(76) Inventors: **Martin J. Kee**, Sammamish, WA (US); **Chao-Chi Chen**, Sammamish, WA (US); **Rod G. Fleck**, Bellevue, WA (US); **Craig W. O'Connell**, Snohomish, WA (US); **Stephen L. Perrin**, Lake Forest Park, WA (US); **Michael S. Clarke**, Mercer Island, WA (US)

Correspondence Address:
Edward W. Bulchis, Esq.
DORSEY & WHITNEY LLP
Suite 3400
1420 Fifth Avenue
Seattle, WA 98101 (US)

(21) Appl. No.: **10/871,871**

(22) Filed: **Jun. 17, 2004**

Related U.S. Application Data

(60) Provisional application No. 60/504,165, filed on Sep. 18, 2003.

Publication Classification

(51) **Int. Cl.**[7] **G06F 1/26**

(52) **U.S. Cl.** **713/323**

(57) **ABSTRACT**

A computer system has a main display attached to a computer chassis. The computer chassis includes a high power, high performance main processor running applications on a first operating system platform. The auxiliary display module has a low power, low performance auxiliary processor, a small touch-screen display and a keypad. The main processor interfaces with a keyboard on the upper surface of the chassis and a main display. In a high power mode, there is no display and keypad input in the auxiliary display module. In a power sleep mode, power is removed from the first processor, the main display and many of the components in the computer chassis. However, key functions, such as email, a contact list, and an appointment calendar can be accessed using the auxiliary display module. In a low power mode, the main display shuts off and many of the components in the computer chassis are powered down. However, key functions, such as email, a contact list, an appointment calendar, and a media player, can be accessed using the auxiliary display module.

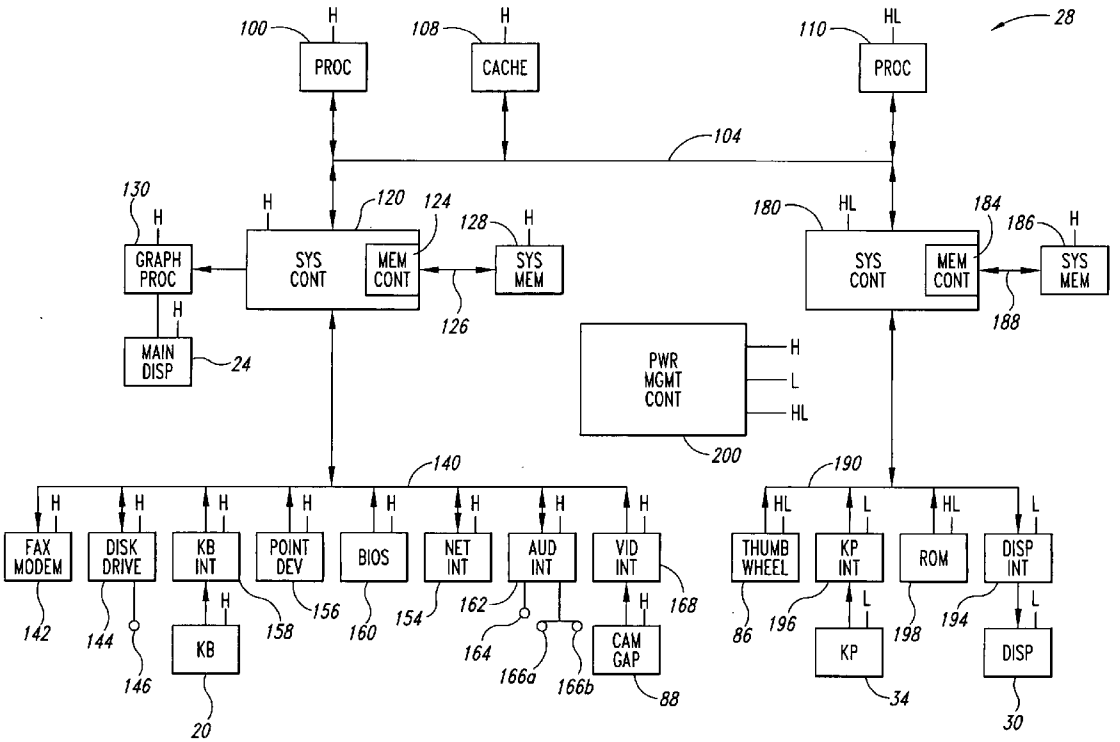

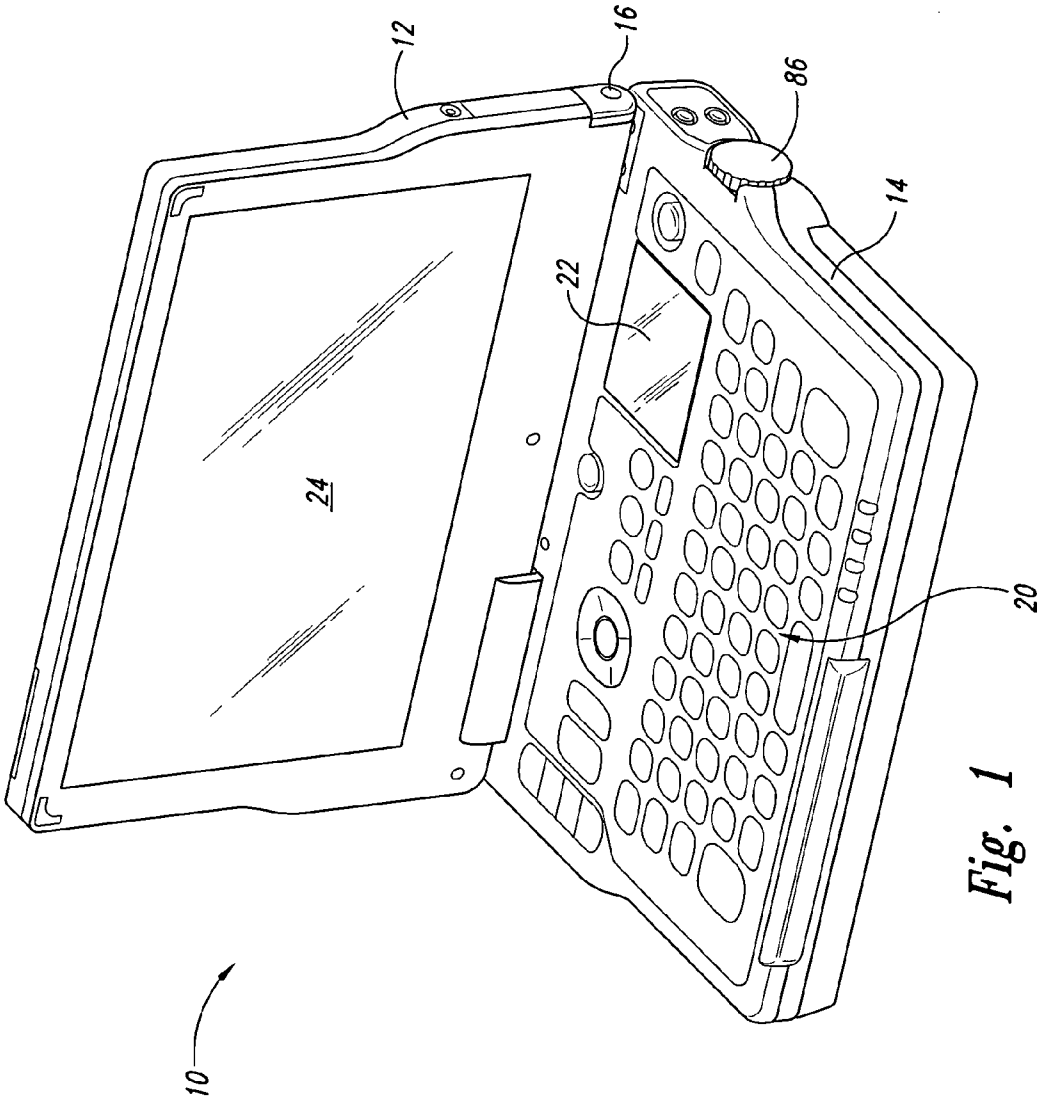

Fig. 1

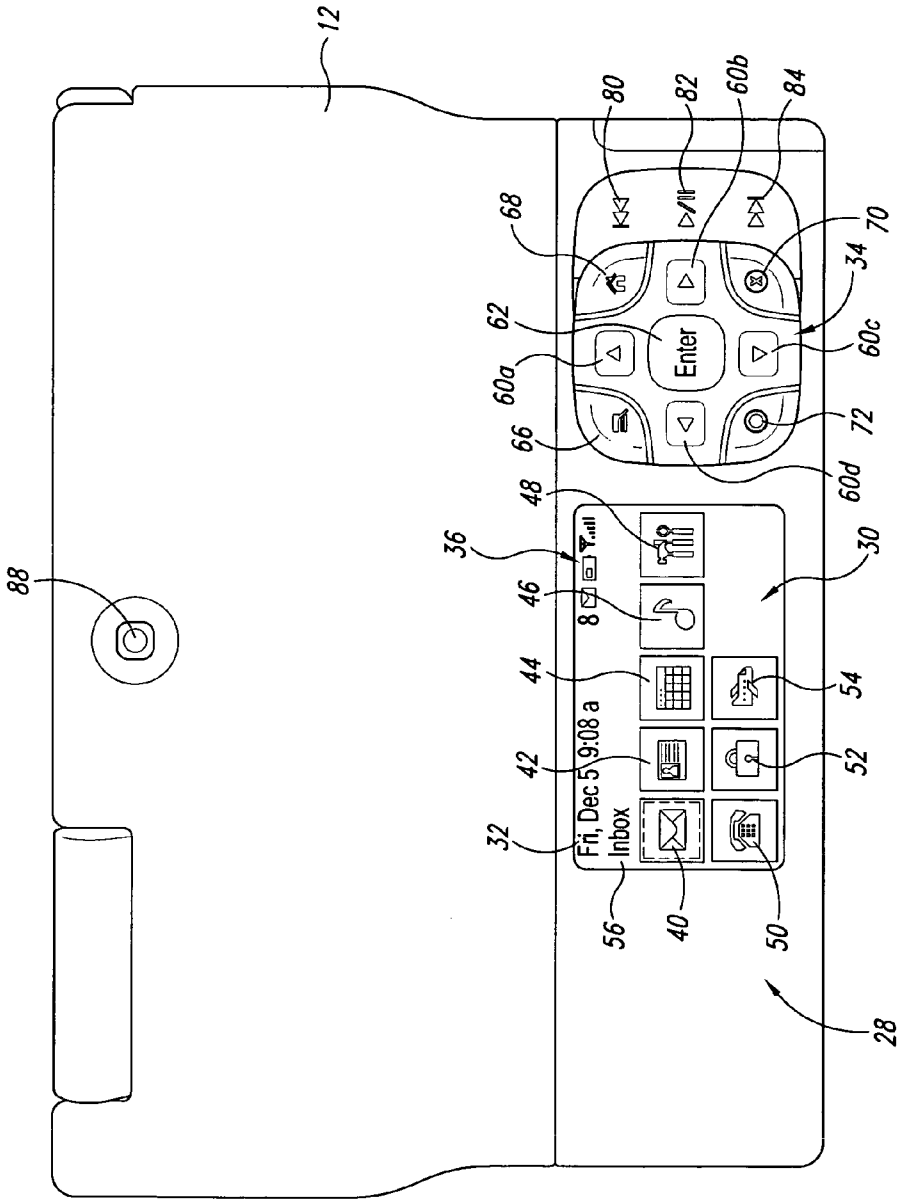
12
80
82
60b
84
68
70
34
62
Enter
60c
60a
66
72
60d
48
36
30
46
8
44
54
42
52
Fri, Dec 5 9:08 a
Inbox
32
56
40
50
28
88

Fig. 2

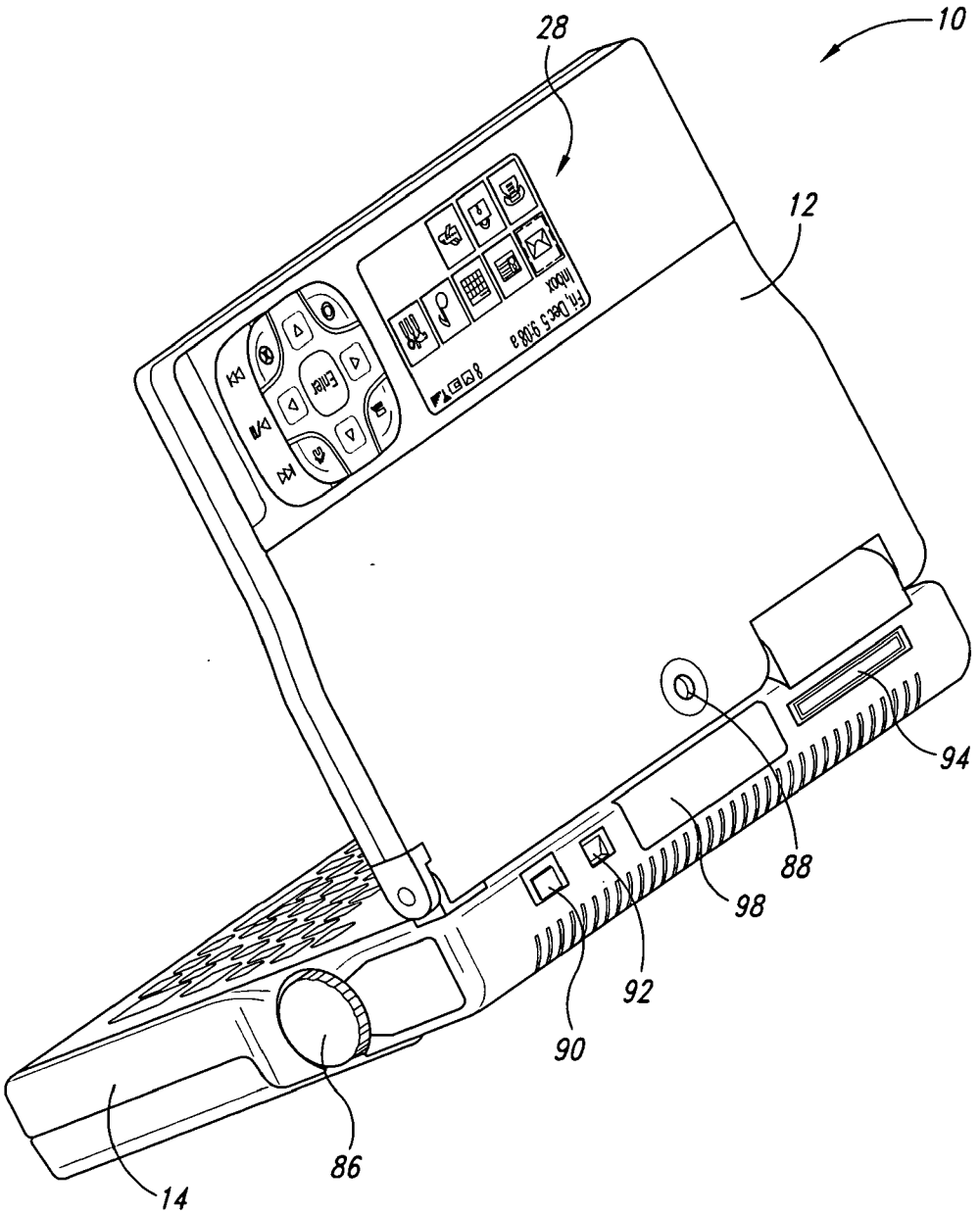

Fig. 3

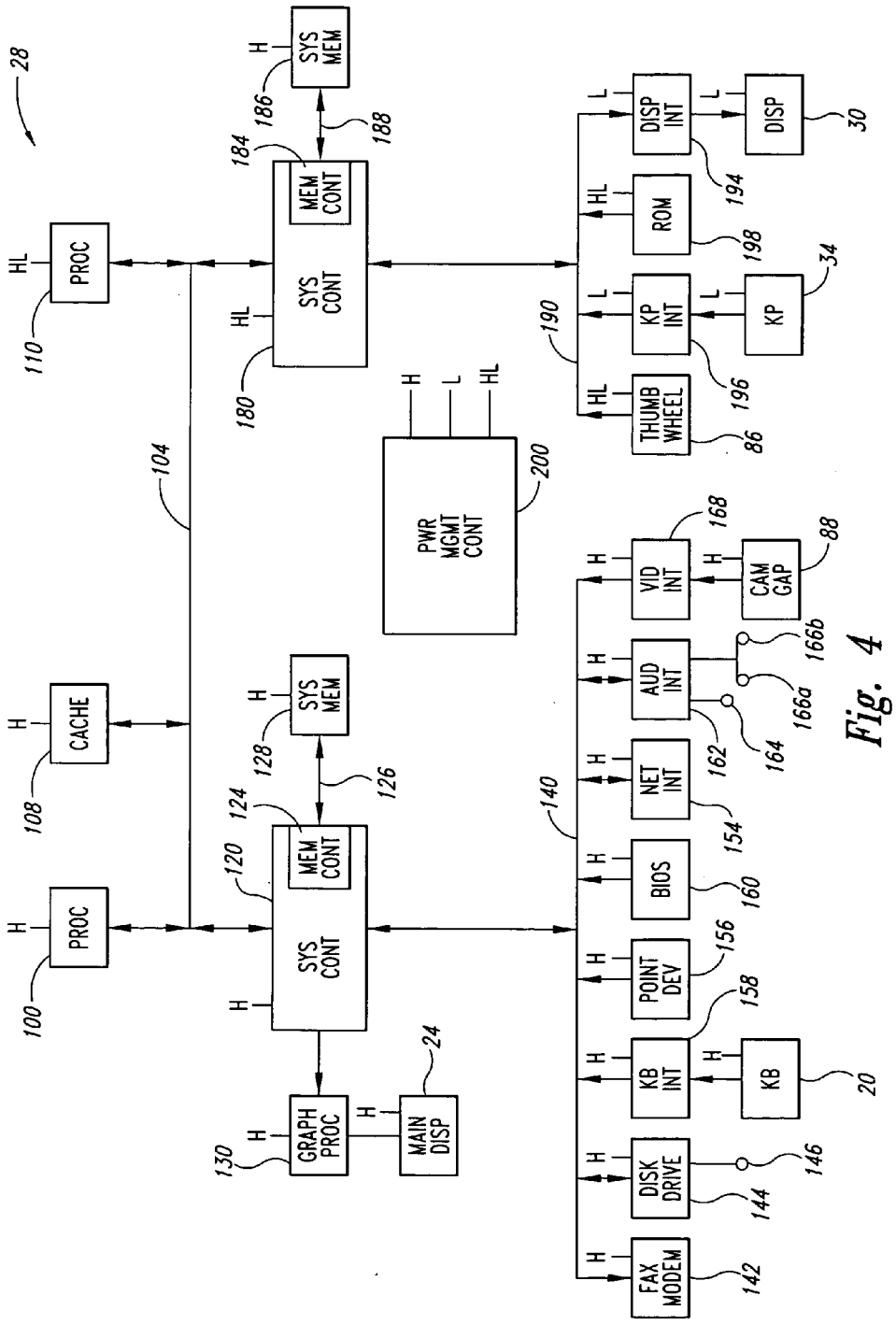
28
PROC
110
HL
CACHE
108
H
PROC
100
H
104
SYS CONT
180
HL
MEM CONT
184
SYS MEM
186
H
188
SYS CONT
120
H
MEM CONT
124
SYS MEM
128
H
126
GRAPH PROC
130
H
MAIN DISP
24
H
PWR MGMT CONT
200
H
L
HL
140
FAX MODEM
142
H
DISK DRIVE
144
146
H
KB INT
158
H
KB
20
H
POINT DEV
156
H
BIOS
160
H
NET INT
154
H
AUD INT
162
164
166a
166b
H
VID INT
168
H
CAM GAP
88
HL
THUMB WHEEL
86
HL
190
KP INT
196
L
KP
34
L
HL
ROM
198
L
DISP INT
194
L
DISP
30

Fig. 4

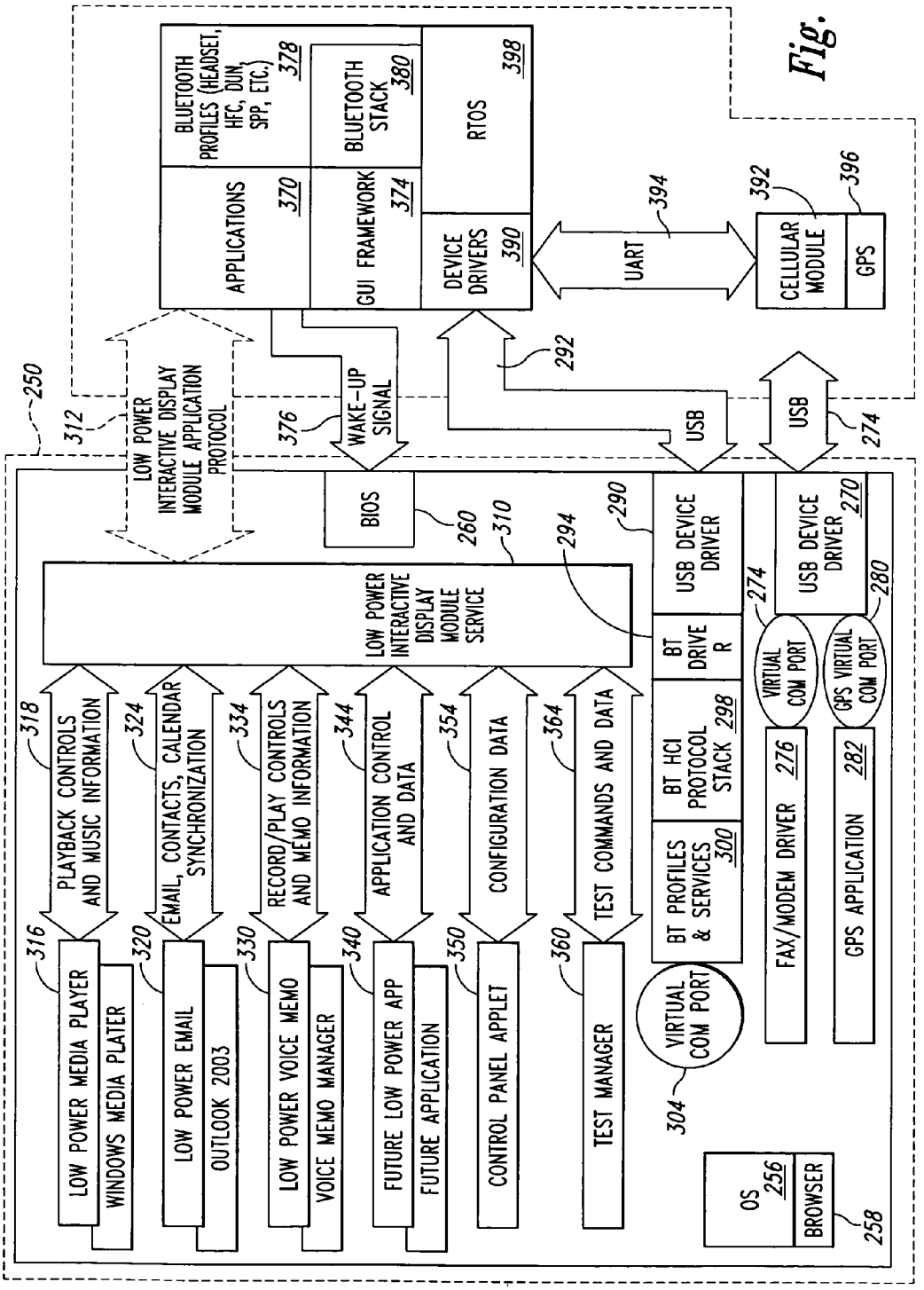
250
312
LOW POWER INTERACTIVE DISPLAY MODULE APPLICATION PROTOCOL
APPLICATIONS 370
BLUETOOTH PROFILES (HEADSET, HFC, DUN, SPP, ETC.) 378
GUI FRAMEWORK 374
BLUETOOTH STACK 380
DEVICE DRIVERS 390
RTOS 398
UART 394
CELLULAR MODULE 392
GPS 396
376
WAKE-UP SIGNAL
292
USB
USB
274
BIOS 260
310
294
290
USB DEVICE DRIVER
USB DEVICE DRIVER 270
280
LOW POWER INTERACTIVE DISPLAY MODULE SERVICE
BT DRIVE R
274
VIRTUAL COM PORT
GPS VIRTUAL COM PORT
318
PLAYBACK CONTROLS AND MUSIC INFORMATION
324
EMAIL, CONTACTS, CALENDAR SYNCHRONIZATION
334
RECORD/PLAY CONTROLS AND MEMO INFORMATION
344
APPLICATION CONTROL AND DATA
354
CONFIGURATION DATA
364
TEST COMMANDS AND DATA
BT HCI PROTOCOL STACK 298
BT PROFILES & SERVICES 300
FAX/MODEM DRIVER 276
GPS APPLICATION 282
316
LOW POWER MEDIA PLAYER
WINDOWS MEDIA PLATER
320
LOW POWER EMAIL
OUTLOOK 2003
330
LOW POWER VOICE MEMO
VOICE MEMO MANAGER
340
FUTURE LOW POWER APP
FUTURE APPLICATION
350
CONTROL PANEL APPLET
360
TEST MANAGER
VIRTUAL COM PORT
304
OS 256
BROWSER
258

Fig. 5

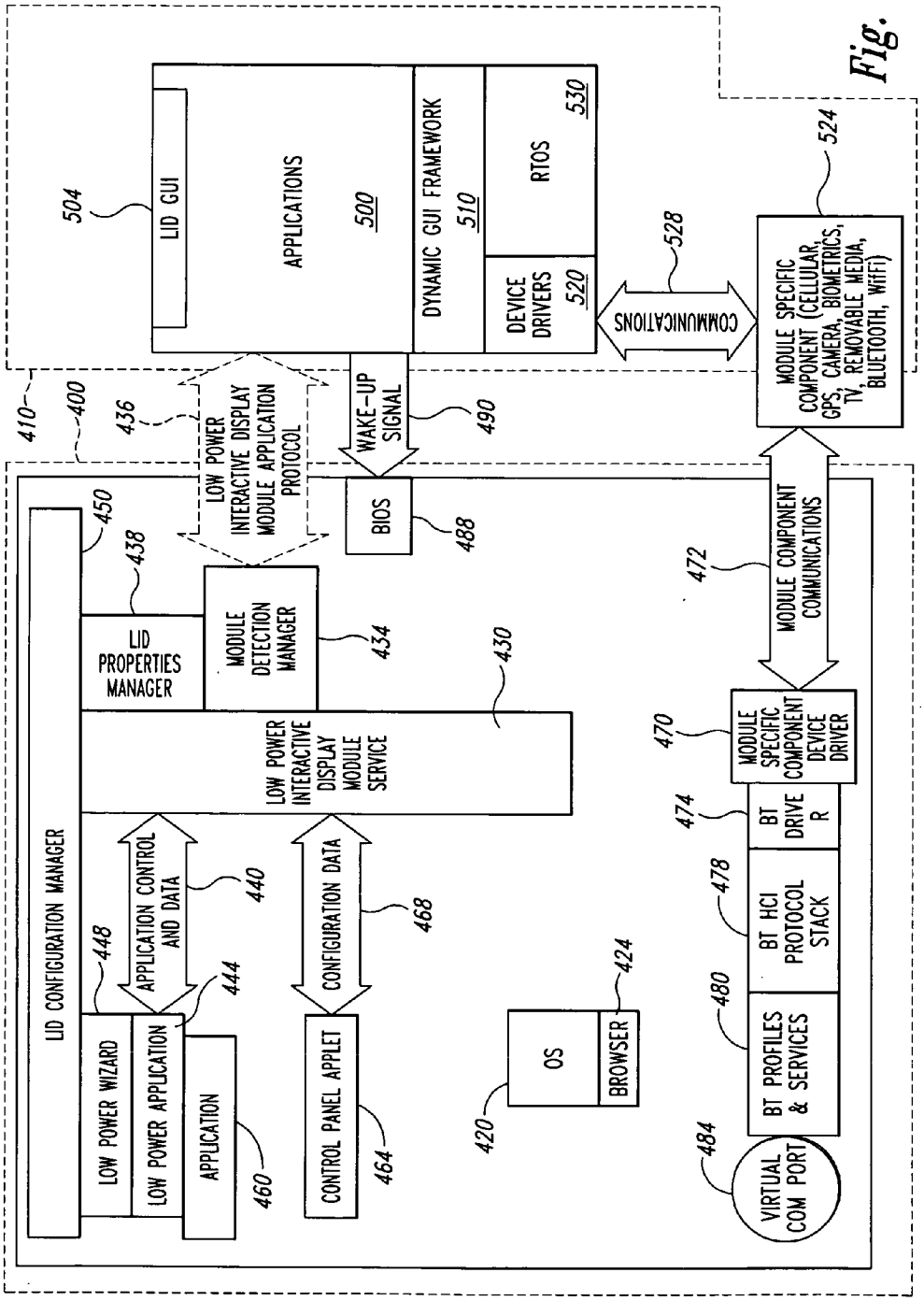
LID GUI
504
APPLICATIONS
500
DYNAMIC GUI FRAMEWORK
510
RTOS
530
DEVICE DRIVERS
520
COMMUNICATIONS
528
MODULE SPECIFIC COMPONENT (CELLULAR, GPS, CAMERA, BIOMETRICS, TV, REMOVABLE MEDIA, BLUETOOTH, WiFi)
524
410
400
436
LOW POWER INTERACTIVE DISPLAY MODULE APPLICATION PROTOCOL
WAKE-UP SIGNAL
490
BIOS
488
MODULE COMPONENT COMMUNICATIONS
472
450
438
LID PROPERTIES MANAGER
MODULE DETECTION MANAGER
434
430
LOW POWER INTERACTIVE DISPLAY MODULE SERVICE
470
MODULE SPECIFIC COMPONENT DEVICE DRIVER
474
BT DRIVER
478
BT HCI PROTOCOL STACK
480
BT PROFILES & SERVICES
484
VIRTUAL COM PORT
LID CONFIGURATION MANAGER
448
APPLICATION CONTROL AND DATA
440
444
CONFIGURATION DATA
468
LOW POWER WIZARD
LOW POWER APPLICATION
APPLICATION
460
CONTROL PANEL APPLET
464
420
OS
BROWSER
424

Fig. 6

PORTABLE ELECTRONIC DEVICE HAVING HIGH AND LOW POWER PROCESSORS OPERABLE IN A LOW POWER MODE

CROSS-REFERENCE TO RELATED APPLICATIONS

[0001] The present application claims the benefit of the filing date of U.S. Provisional Application No. 60/504,165 entitled SOFTWARE AND HARDWARE FEATURES FOR MINI-PC, filed Sep. 18, 2003, which is incorporated herein by reference.

FIELD

[0002] This relates generally to processor-based systems, and more particularly, to a dual processor computer system operable in a reduced power consumption mode having limited performance.

BACKGROUND

[0003] Personal computers have become indispensable tools for business and personal use. In addition to a wide variety of stand-alone applications that may be run on a personal computer, personal computers also serve as communications terminals for access to the Internet. Portable personal computers, generally known as "laptop" or "notebook" computers, have become increasingly popular because their portability allows access to the wide variety of computer applications when traveling, such as on airplanes. However, the usefulness of such portable computers are frequently limited by the limited useful life of batteries powering the computers before the batteries need to be recharged. Furthermore, although continued progress has been made in reducing the weight and bulk of portable personal computers, they are still fairly difficult to carry in many instances.

[0004] Another limitation of conventional personal computers is the inability to use them to quickly review information, such as to look up a phone number or an address. Before the computer can be used to access the information, the computer must be turned on and it then must "boot up" by running an initialization sequence and loading an operating system. This process can take a considerable period of time. Furthermore, it is generally necessary to open the portable computer to turn it on and access the information. It can be difficult to perform this function under certain circumstances, such as when driving a car or sitting in the small confines of an aircraft seat.

[0005] Various devices have been developed to address these and other limitations of conventional portable personal computers, such as laptop and notebook computers. The most prevalent of these devices is the personal digital assistant, or "PDA," which provides some of the functionality of a portable personal computer without the size and weight of such computers. This limited functionality generally includes an appointment calendar, an address or contact list, a task list and email capability when coupled to a suitable communication link, which may be wireless. In some cases, a cellular telephone is built into the PDA, and various applications having limited functionality, such as spreadsheets and word processors, are also available. PDAs offer a convenient means of using the limited functionality that they offer because it is not necessary to open a cover to view their display screens. Furthermore, there is minimal delay in accessing PDAs because their operating system remains stored in random access memory when the PDA is turned off so it may be executed by an internal processor as soon as power is applied to the processor. It is therefore not necessary to wait for a boot sequence to execute and an operating system to be loaded. When the PDA is turned off, power continues to be applied only to essential circuitry like a volatile random access memory, thus preserving the useful life of an internal battery before recharge is needed.

[0006] Another approach has been to include auxiliary components in notebook computers either to make them more convenient to use when a display lid of the computer is closed or to consume less power when a limited function, such as playing music, is operational. For example, U.S. Pat. No. 5,768,164 discloses a notebook computer having a small display on an outer surface of the display lid of the computer. A subset of the pixels in a larger main display on the inner surface of the lid is mapped to the small display, which can be viewed when the display lid of the computer is closed. Although the disclosed notebook computer does allow some information to be viewed when the display lid is closed, it provides the complete functionality of the computer at this time, thus making it impractical for long-term use.

[0007] Although PDAs have been very successful in making limited computer functions conveniently available to users, they are not without their limitations. In particular, the limited functionality of PDAs coupled with their small display and inconvenient data entry mechanism, make it difficult to use them for many applications, such as word processing and drafting lengthy emails. As a result, travelers using PDA's often bring portable computers with them, and, in many cases, also carry a cellular telephone and sometimes an MP3 music player. All of this functionality could be provided by the personal computer alone, but the limited battery life and inconvenience of use described above make such use impractical.

[0008] There is therefore a need for a computer system that provides the ease of use and long battery life of a PDA with the functionality of a notebook computer thus making it unnecessary to own or travel with one or more electronic devices in addition to a notebook computer.

SUMMARY

[0009] One preferred aspect provides a computer system having a first processor supporting the operation of a main display and keyboard, and a second processor supporting the operation of an auxiliary user interface, such as a keypad and either an auxiliary display or a portion of the main display. The first processor is a high power processor that has relatively high processing capabilities but consumes a great deal of power, and the components with which it interfaces also consume a great deal of power. This high power processor provides the substantial functionality of the computer system. The second processor is a low power processor that has relatively low processing capabilities but consumes relatively little power, and it interfaces with components that also consume relatively little power. This low power processor provides limited functionality similar to that of a PDA when the computer system is turned off or is in a low power mode.

BRIEF DESCRIPTION OF THE DRAWINGS

[0010] **FIG. 1** is a front isometric view of a computer system according to one embodiment showing a display lid in its open position.

[0011] **FIG. 2** is a top plan view of the surface of the display lid of the computer system of **FIG. 1**.

[0012] **FIG. 3** is a rear isometric view of a rear panel of the computer system of **FIG. 1**

[0013] **FIG. 4** is a hardware system block diagram of one embodiment of the computer system of **FIG. 1**.

[0014] **FIG. 5** is a software system block diagram of one embodiment of the computer system of **FIG. 1**.

[0015] **FIG. 6** is a software system block diagram of another embodiment of the computer system of **FIG. 1**.

DETAILED DESCRIPTION

[0016] A computer system **10** according to one embodiment of the present invention is shown in **FIG. 1**. The computer system **10** is an example of a computer system with a "clam shell" structure formed by a lid **12** pivotally mounted to a chassis **14** at one edge **16**. A keyboard **20** covers substantially the entire inner surface of the chassis **14** except for an area occupied by a touchpad **22** pointing device. A main display **24** covers substantially the entire inner surface of the lid **12**. The computer system **10** is turned on by pressing an appropriate key on the keyboard **20**, and the keyboard **20** is used to enter alphanumeric data. Although the computer system **10** may be substantially the size of a conventional notebook computer, i.e., on the order of 250 mm by 300 mm in plan form, it is preferable only slightly larger than a conventional PDA, i.e., on the order of 100 mm by 150 mm with a thickness of about 25 mm. However, it will be understood that the computer system may have a physical structure and user interface device that are different from those shown in **FIG. 1**. With reference to **FIG. 2**, the outer surface of the lid **12** includes a Low Power Interactive Display Module ("LID module") **28** that includes an auxiliary touch-screen display **30** and a membrane keypad **34**. Shown on the display **30** are the current date and time **32**, status icons **36**, including status indicators showing the number of new email messages, the charge status of an internal battery, and the signal strength for an internal cell phone application. The touch-screen display **30** also includes an icon **40** for accessing the "Inbox" of an email application, an icon **42** for accessing a contacts application, an icon **44** for accessing an appointment calendar application, an icon **46** for accessing an audio player application, an icon **48** for accessing an voice memo application, an icon **50** for accessing a modem, an application **52** for locking the system, and an icon **54** for turning off wireless functionality when flying in an airplane. The functions represented by each of these icons **40-54** can be selected by pressing the icon on the touch-screen display **30**. The particular icon **40-54** that is selected is shown in the display **30** at **56**.

[0017] The keypad **34** includes directional keys **60***a-d* that perform different functions depending on which application is being accessed. The directional keys **60***a-d* are used to move a cursor up, to the right, down, and to the left, respectively, when alphanumeric text is shown in the touch-screen display **30**. When the audio player application is active, the directional keys **60***a,c* are used to increase or decrease the volume, respectively, and the directional keys **60***b,d* are used for respectively moving forwardly or a rearwardly in an audio selection. The directional keys **60***a-d* surround an Enter key **62** that is used in a conventional manner.

[0018] The keypad **34** also includes a menu key **66** that causes menu items to be shown in the touch-screen display **30**, a home key **68** that causes the display **30** to show the icons **40-54** illustrated in **FIG. 2**, an "Esc" or cancel key **70** that is used to cancel a current selection, and an Enter key **72** that essentially performs the same function as the Enter key **62**. The key **72** and key **70** can also be used as "call" and "end call" buttons, respectively, when the module LID **28** is used to implement telephone applications.

[0019] Also included with the keypad **34** are three audio control keys that are used when the audio playback application is active. These audio control keys are a key **80** for selecting a previous track, a play/pause key **82**, and a next track key **84**, which are used in a conventional manner.

[0020] In one embodiment, the computer system **10** also includes a side wheel **86** (shown in **FIG. 1**) mounted on the side of the computer system **10** that can be rotated in either direction by manipulating the wheel **86** with a thumb. The side wheel **86** allows a user to scroll through menu items shown on the touch-screen display **30** when either the menu key **66** or an application running on the computer system **10** displays a menu. The side wheel **86** can also be used for other functions that are supported by the LID module **28**, such as a "zoom" control in certain applications to change the scale at which an item is shown on the display **30**. Finally, the side wheel **86** may be used to configure the computer system **10**, such to adjust the contrast of the main display **24** and the touch-screen display **30**, to toggle the touch-screen display **30** on and off, to control the volume of internal speakers, etc. The side wheel **86** can also be pressed inwardly along the axis of rotation to generate a key click, which is generally used to perform an enter or select a function. As also shown in **FIG. 2**, the computer system also includes a video camera lens **88** that allows video frames to be saved as a video file, and may be used with a Webcam application. It will be understood, however, that user input devices other than the touch screen display **30**, keypad **34**, side wheel **86**, etc. may be used.

[0021] The LID module **28** may be used to provide access to the applications corresponding to the icons **40-54** when the lid **12** is closed and the computer system **10** is turned off or when the lid **12** is closed and the computer system **10** is in a low power mode. As explained in greater detail below, the applications corresponding to the icons **40-54** are executed by a low power processor that consumes relatively little power. Therefore, the LID module **28** can be used to perform key tasks like checking emails, viewing contact and calendar information, and recording voice memos when the computer system **10** is in a low power mode. When the computer system **10** is turned on, a high power processor is used to provide all of the functionality of the computer system **10**, and it consumes a substantial amount of power at that time.

[0022] As shown in **FIG. 3**, the computer system **10** includes most of the usual connectors for connecting to external devices. More specifically, the computer system **10**

includes a conventional mini-universal serial bus ("USB") port **90**, a DC power input jack **92**, and a docking connector **94** including additional USB ports. The various communication ports can be used to provide communication between an external device and the computer system **10**. Many such peripheral devices are well known, for example, printers, digital cameras, scanners, external disk drives, and the like. Although not shown in **FIG. 3**, the computer system also includes an Ethernet port, a modem port, a serial port, etc. The rear portion of the computer system **10** further includes an antenna **98** for wireless communication. The computer system **10** can be equipped with wireless capability using IEEE 802.11 WiFi, Bluetooth, or other wireless communication protocols. The antenna **98** can be utilized for transmission as well as reception of wireless signals. The computer system **10** also includes an internal battery (not shown in **FIGS. 1-3**) as well as in internal AC powered battery charger (not shown).

[**0023**] The hardware architecture of the computer system **10** will now be explained with reference to the block diagram of **FIG. 4**. The hardware of the computer system **10** provides a suitable computing environment for the software architecture, which will be described with reference to **FIGS. 5 and 6**. The computer system **10** includes a high power processor **100** coupled to a processor bus **104**. The processor bus **104** preferably includes a command/status bus, an address bus and a data bus. Although the high power processor **100** preferably includes a level 1 ("L1") cache, the computer system **10** includes a level 2 ("L2") cache **108**, which is coupled to the high power processor **100** through the processor bus **104**. The L2 cache **108** includes the usual tag and data memories, which are normally implemented using static random access memory ("SRAM") devices. A low power processor **110** is also coupled to the processor bus **104**, although the low power processor **110** preferably does not access the L2 cache **108**. The low power processor **110** is used to support the functionality that is available using the LID module **28**.

[**0024**] The high power processor **100** accesses a number of computer components through a system controller **120**, which is also connected to the processor bus **104**. The system controller **120** includes a memory controller **124** that is coupled through a memory bus **126** to a system memory **128**. The memory bus **126** includes a command bus through which memory commands are passed to the system memory **128**, an address bus specifying a location in memory that is being accessed by a read or write command, and a bi-directional data bus through which write data are passed to the system memory **128** and read data are passed from the system memory **128**. A suitable random access memory device, typically a dynamic random access memory ("DRAM") device, is used as the system memory **128**.

[**0025**] The system controller **120** also includes a graphics port that is coupled to a graphics processor **130**. The graphics processor **130** is, in turn, coupled to the main display **24**, which may be a liquid crystal display ("LCD"), but may also be an organic light emitting diode ("OLED") display, a plasma display, a field emission display ("FED"), or some other type of display.

[**0026**] The system controller **120** also serves as a bus bridge between the processor bus **104** and a peripheral bus **140**, which may be a peripheral component interconnect ("PCI") bus. The peripheral bus **140** is coupled to a FAX/modem **142** and a disk drive **144** accessing a hard disk **146**, which together provide non-volatile storage of computer readable instructions, program modules, data structures, and other data. However, other types of non-volatile storage may also be used, such as flash memory cards, recordable CD-ROM and DVD disks, Bernoulli cartridges, smart cards, to name a few. The peripheral bus **140** is also coupled to a network interface **154** that is used to provide communications through a suitable local area network ("LAN"), such as an Ethernet network. The network interface **154** may also provide access to a wireless network, such as 802.11 WiFi, Bluetooth, cellular using TDMA, FDMA and/or CDMA protocols, or some other wireless communication link. As part of the user interface for the computer system **10**, the peripheral bus **140** is also coupled to a pointing device **156**, such as an external mouse and the touchpad **22**, and a keyboard interface **158**, which is coupled to the keyboard **20**. The peripheral bus **140** is coupled to a read only memory ("ROM") device **160**, which stores a basic input/output system ("BIOS") program that includes a boot sequence, which is executed by the high power processor **100** at power-up. The BIOS program stored in the ROM device **160** will be described in greater detail with reference to **FIG. 5**. The BIOS program is preferably shadowed by being transferred from the ROM device **160** to the system memory **128** as part of the boot sequence, and it is then executed by the high power processor **100** from the system memory **128**.

[**0027**] The peripheral bus **140** is also coupled to an audio interface **162** that is connected to an internal microphone **164** and a pair of speakers **166***a, b*. The audio interface **162** includes a digital-to-analog converter having a pair of outputs that are coupled to the speakers **166***a, b*. The audio interface **162** also includes a sampler producing analog samples of a signal from the microphone **164**, and an analog-to-digital converter, which digitizes the analog samples and passes the digital sample data to the peripheral bus **140**. Finally, a video interface **168** is coupled to the peripheral bus **140** for receiving an analog video signal from the camera **88** (**FIG. 2**). The video interface **168** includes a sampler producing analog samples of a video signal from the camera **88**, and an analog-to-digital converter, which digitizes the video samples and passes the digital video data to the peripheral bus **140**.

[**0028**] As mentioned above, the computer system **10** also includes the low power processor **110**. The low power processor **110** is coupled through the processor bus **104** to an auxiliary system controller **180**, which also includes a memory controller **184**. The memory controller **184** is coupled to a system memory **186**, which may be a DRAM device, through a memory bus **188**. The system memory **186** has a capacity that is smaller than the capacity of the system memory **128**, and it may operate at a substantially slower speed. The system memory **186** may be accessed by either the high power processor **100** or the low power processor **110**.

[**0029**] The system controller **184** is coupled to a peripheral bus **190**, which may be a PCI bus, and ISA bus or some other type of bus. The system controller **184** and the peripheral bus couple the low power processor **110** to the side wheel **86**, a display interface **194** for the touch-screen display **30**, and a keypad interface **196**, which is coupled to the membrane keypad **34**. The peripheral bus **190** is also

coupled to a ROM **198** that stores a BIOS program and operating system for the low power processor **110**. The ROM **198** also stores the firmware for the applications used by the LID module **28**. These applications are run on the low power processor **110**, which, in conjunction with the system controller **180**, system memory **186** and components coupled to the peripheral bus **190**, are used to support the functionality of the LID module **28**.

[**0030**] The final component of the computer system **10** shown in **FIG. 4** is a power management controller **200**. A variety of conventional power conserving suspend states and sleep modes are supported by the BIOS program stored in the ROM **160**, including S4 hibernation, S3 standby, S3 standby with the low power processor **110**, the touch-screen display **30**, and the keypad interface **196** powered, and S2 with only the components needed for audio playback powered. In some of these modes, the contents of the system memory **128** are transferred to the hard disk **146**, and power is then removed from the system memory **128**.

[**0031**] Unlike conventional computer systems, the power management controller **200** used in the computer system **10** of **FIG. 4** includes a high power supply output "H," which is powered in a high power mode, a low power supply output "L," which is powered in a low power mode, and a high/low power supply output "HL," which is powered in both modes. As shown in **FIG. 4**, the high power processor **100**, the cache **108**, the system controller **120**, and all of the components that are directly or indirectly coupled to the system controller **120** are powered in the high power mode. In the low power mode, only the components needed to support the LID module **28**, i.e., the low power processor **110**, the system controller **184**, and the components directly or indirectly coupled to the system controller **184**, are powered. However, in the high power mode, all of the components that are powered in the low power mode also receive power except for the touch-screen display **30** and the keypad interface **196**. Thus, in the high power mode, the low power processor **110** can continue to execute code from the system memory **186** in the LID module **28** even though the touch-screen display **30** is off and inputs from the keypad **34** are ignored. However, the LID module **28** will continue to synchronize email, contacts, calendar and other information needed to keep the data in the LID module **28** coherent with the data in the other portion of the computer system **10**.

[**0032**] Although the high power processor **100** is shown as being coupled to the low power processor **110** through a common processor bus **104**, it will be understood that they may be coupled to each other by other means. For example, the high power processor **100** and the low power processor **110** may be coupled to respective processor buses (not shown) that are isolated from each other, and the processors may be coupled to each other through communications links (not shown).

[**0033**] In operation, the computer system **10** boots up in the high power mode at power-up using the high power processor **100** after the boot sequence and the operating system have been transferred to the system memory **128**. The low power processor **110** boots up by executing a BIOS program stored in the ROM **198** after it has been shadowed to the system memory **186**. The operating system for the low power processor **110** is also transferred from the ROM **198** to the system memory **186**. However, the BIOS program and the operating system for the low power processor **110** may be transferred to the system memory **186** by other means. For example, the BIOS program and operating system may be stored in the hard disk **146** and transferred to the system memory **186** by the high power processor **100**. Once the operating systems have been loaded into the system memories **128**, **186**, the computer system **10**, including the LID module **28**, are operational. However, the touch-screen display **30** and keyboard interface **158** are not operational. Therefore, the user interface is provided primarily by the keyboard **22**, the touchpad **22**, and the main display **24**.

[**0034**] When the computer system **10** switches to the low power mode, the power management controller **200** removes power from the high power supply output H, and applies power to the touch-screen display **30** and keyboard interface **158** by applying power to the HL output of the power management controller **200**. Thereafter, only the LID module **28** components are powered, and the only operable user interface for the computer system **10** are the touch-screen display **30**, the keypad **34**, and the side wheel **86**. However, the low power processor **110** does have the ability to "wake-up" or re-power the high performance processor **100** to access components in the computer system **10**. Although the relatively low performance of the processor **110** and the relatively small capacity and slow speed of the system memory **186** do not provide nearly the processing capabilities of the high power processor **100** and system memory **128**, they provide adequate processing capability to perform the functions accessed through the LID module **28**. As explained above, these functions include email, access to a contacts listing, access to an appointment calendar, and playing audio tracks. Moreover, these functions can be easily accessed since it is not necessary to open the lid **12** (**FIGS. 1-3**) or wait for a boot sequence to run and operating system to be loaded.

[**0035**] When returning to the high power mode, the high power processor **100** executes the BIOS program stored in the ROM device **160** in the same manner as at power-up. The power management controller **200** then removes power from the touch screen display **30** and keyboard interface **20** by removing power from the L output of the power management controller **200**. Thereafter, the user interface for the computer system **10** includes the main display **24** and the keyboard **20**, although the LID module **28** is still operational in the high power mode except for the touch-screen display **30** and the keypad **34**.

[**0036**] The software architecture of the computer system **10** is shown in **FIG. 5**. The software for the computer system **10** is essentially divided between computer system software **250** executed by the high power processor **100** (**FIG. 4**), and LID module software **254** executed by the low power processor **110**, which is used to support the LID module **28**. The software **250** includes an operating system **256**, such as Microsoft® Windows XP®, which provides a suitable computer environment for the other software **250**. The operating system **256** also includes a web browser **258** that may be markup language-based, such as Hypertext Markup Language ("HTML"), Extensible Markup Language ("XML") or Wireless Markup Language ("WML"). A suitable browser **258** that may be used is the Microsoft® Internet Explorer®.

[**0037**] A BIOS program **260** is transferred from the ROM device **160** and the operating system **256** is transferred from

the disk drive **144** to system memory **128** at power-up. The BIOS program **260** is then executed by the high power processor **100** from the system memory **128**. The BIOS program **260** allows for multiple boot sources, including the disk drive **144**, a USB floppy connected to the USB port, a USB CD-ROM/DVD, and a USB Ethernet port. The BIOS program **260** also provides a crisis recovery for the BIOS and the operating system, and it includes a conventional BIOS Flash Utility.

[**0038**] The computer system software **250** also includes a universal serial bus ("USB") device driver **270** that is used to establish serial communications through a USB bus **274** with the LID module software **254** executed by the low power processor **110**. The USB device driver **270** interfaces with a virtual communications port **274** that provides communications with a driver **276** for the Fax/Modem **142** (**FIG. 4**). The cellular module **392**, in combination with the USB device driver **270**, virtual communications port **274** and Fax/Modem **276** allow a cellular phone to be used as a cellular modem. The USB device driver **270** also interfaces with a global positioning system ("GPS") virtual communications port **280** that allows one or more GPS applications **282** to receive real time position information.

[**0039**] The computer system software **250** executed by the high power processor **100** also includes a second USB device driver **290** that is also used to establish serial communications through a USB bus **292** with the software **254** executed by the low power processor **110**. The USB device driver **290** interfaces with a Bluetooth driver **294**, which, in turn, interfaces with a Bluetooth CHI Protocol Stack **298** and a Bluetooth Profiles & Services List **300**. These Bluetooth components are accessed by the operating system **256** through a virtual communications port **304** for use by various applications, such as mapping programs, that require position information.

[**0040**] As previously explained, the low power processor **110** provides access to certain applications in the low power mode using the LID module **28**. The low power processor **110** can access these applications and other software running on the LID module **28** through a Low Power Interactive Display Module Service (the "Module Service") **310** and a Low Power Interactive Display Module Application Protocol (the "Protocol") **312**. The Module Service **310** interacts with software components running under the operating system **256** to provide access to a Low Power Media Player application **316**, such as Windows® Media Player, through playback controls and music information **318**. The Module Service **310** also provides access to a Low Power Email and other applications **320**, such as Outlook **2003**, through email, contacts and calendar synchronization **324**. The email application may receive emails though a wireless link accessed through the network interface **154** (**FIG. 4**), and it may periodically download emails, such as every 10 minutes, and cache them for viewing by a user. As a result, email messages can be made instantly available. The email application may allow the user to select in advance which attachments to emails will be downloaded with periodically downloaded messages. These attachments are then downloaded in background so the email application is not tied up. In the high power mode, email capability is provided by an email application running on the operating system **256** of the computer system **10**.

[**0041**] The Protocol **312** allows the functions available on the LID module **28** to also be available in the computer system **10**. To accomplish this, the Protocol **312** uses platform-independent data types to allow data types to be defined appropriately for each platform. The Protocol **312** also provides interfaces for suitable programming languages, such as C and C++. The core of the Protocol **312** is a set of messages or data packets that are passed between the Module Service **310** and the applications being run in the LID module **28**. The Protocol **312** uses messages that are tailored to the needs of each application, i.e. the email, contacts, calendar and audio player applications. The general format of each message in the Protocol **312** is a Type field, a Length field, and a Data field. The Type field indicates the kind of message, the length field specifies the number of bytes of data in the message, and the Data field is variable length block of data providing information having a format implied by the kind of message designated by the Type field. Message types and the format of their corresponding data may be defined in a header file containing structures that can be used by both C code for the software executed by the low power processor **110** and C++ for the software executed by the high power processor **100** through the Module Service **310**. Thus, a Type field for an email message will imply a format for the Data field that is different from the format of the Data field implied by a Type field for a calendar message. However, other message formats for the Protocol **312** may be used. For example, a Sequence number, cyclic redundancy check ("CRC") value and Priority Level may be added. The use of a Sequence number allows a receiver of a message to determine if a message has been lost. The CRC field allows errors in the Data field to be detected, and the Priority Level field allows the receiver to prioritize sequentially received messages.

[**0042**] A Low Power Voice Memo application **330**, such a Voice Memo Manager, is also accessible through the Module Service **310**, which extracts the Protocol **312** from record/play controls and memo information **334**. Expandability is built into the computer system **10** to support a Future Low Power application **340** through application control and data **344**. As explained below, the application control and data **344**, and the Protocol **312** from which they are generated by the Module Service **340**, may be specific to an application or they may be generic to whatever application is needed to support a feature of the LID module **28**.

[**0043**] The LID module software **254** being executed by the low power processor **110** is configured using a Control Panel Applet **350** through configuration data **354**, which is provided to the LID module software **254** through the Module Service **310**. Finally, a Test Manager **360** provides the LID module software **254** with test commands and data **364** that allows the low power processor **110** to execute various self-test routines.

[**0044**] The LID module software **254** includes various applications **370** that are executed by the low power processor **110**, and a graphics user interface framework **374** that configures the touch-screen display **30** to provide an interface with a user, keypad **34** and side wheel **86**. The LID module software **254** provides a wake up signal **376** when one of the applications **370** or other LID module software **254** requires access to the computer system software **250**. The wake-up signal is coupled to an interrupt port of the high power processor **100**, which, after be interrupted by the

wake-up signal, causes power to be applied to the components that are powered by the high power supply voltage H from the Power Management Controller **200 (FIG. 4)** so that the LID module software **254** can access the computer system software **250**.

[**0045**] Also included are Bluetooth profiles **378** that interface with a Bluetooth stack **380** to provide Bluetooth wireless capability using a Bluetooth capable cell phone. The LID module software **254** includes device drivers **390** that are coupled to the USB bus **292** and to a Cellular Module **392** through a universal asynchronous receiver/transmitter ("UART") **394**, which provides access to cellular service, and a GPS module **396** that provides real time position data.

[**0046**] The platform on which the above-described LID module software **254** runs is a suitable real time operating system ("RTOS") **398**. As explained above, the operating system **398** is executed by the low power processor **110** from the system memory **186** to provide the functionality of the LID module **28**. The RTOS **398** and the Application **370** cause the low power processor **110** to act as a master to the high power processor **100** in the low power mode. In the high power mode, the RTOS **398** and the Application **370** cause the high power processor **100** to act as a master to the low power processor **110**.

[**0047**] Another embodiment of computer system software **400** is shown in **FIG. 6**. The software **400** has the advantage of providing generic support to another embodiment of LID module software **410** so that the software **400** need not be specific to functions performed by the LID module **28**. Instead, the software **400** can generically support the LID module software **410** as new functionality is incorporated in the LID module **28**. As a result, the LID module **28** can automatically configure an application added to the computer system **10** for execution by the high power processor **100**. The software **400** thus provides the LID module **28** with "plug and play" capability of new applications.

[**0048**] With reference to **FIG. 6**, the computer system software **400** includes an operating system **420**, such as Microsoft® Windows XP®, which, as previously mentioned, includes a web browser **424**, such a Microsoft® Internet Explorer®. The computer system software **400** also includes a Low Power Interactive Display Module Service ("Module Service") **430** that interfaces with the LID module software **410** through a Module Detection Manager **434** using a low power interactive display module application protocol ("Application Protocol") **436**. The Application Protocol **436** messages are not tied to specific applications. Instead the Application Protocol **436** messages provide sufficient information about the LID module software **410** based on information from the Module Detection Manager **434** that the Module Service **430** can configure the applications included in the computer system software **400**. Similarly, a Lid Properties Manager **438** provides information about the properties of specific components in the LID module **28** that allow the Module Service **430** to also configure various applications included in the computer system software **400**. More specifically, the Module Service **340** uses the information to provide application control and data **440**, which is passed to a Low Power Application **444**. The application control and data **440** is used to configure the Low Power Application **444** so that it can suitably operate with specific hardware and software in the LID module **28**, such as cellular phones with or without GPS, camera or Bluetooth capabilities. The Low Power Application **444** is configured by a Low Power Wizard **448** using the application control and data **350** under control of a Lid Configuration Manager **450**.

[**0049**] The computer system software **400** also includes various applications **460** that use the platform of the operating system **420** when the computer system **10** is operating in the high power mode. As with the computer system software **250** of **FIG. 5**, the computer system software **400** also includes a Control Panel Applet **464** to which configuration data **468** is passed.

[**0050**] The computer system software **400** also includes a Module Specific Component Device Driver **470** that provides communications with specific components in the LID module **28** using Module Component Communications **472**. The Module Specific Component Device Driver **470** interfaces with a Bluetooth driver **474**, which, in turn, interfaces with a Bluetooth HCI Protocol Stack **478** and a Bluetooth Profiles & Services List **480**. These Bluetooth components are accessed by the operating system **420** through a virtual communications port **484**.

[**0051**] Finally, a Kernel **488** is provided in the computer system software **400** to allow the LID module software **410** to switch the computer system **10** to the high power mode responsive to a wake-up signal **490**.

[**0052**] The LID module software **410** includes various applications **500** that are executed by the low power processor **110**, and a graphics user interface **504** that provides an interface with a user through the touch-screen display **30**, keypad **34** and side wheel **86**. The LID module software **410** provides the wake-up signal **490** when one of the applications **500** or other LID module software **410** requires access to the computer system software **400**. As mentioned above, the wake-up signal causes power to be applied to the components that are powered by the high power supply voltage H from the Power Management Controller **200 (FIG. 4)** so that the LID module software **410** can access the computer system software **400**.

[**0053**] Also included in the LID module software **410** is a Dynamic GUI Framework **510** that configures the interface provided by the touch-screen display **30**, keypad **34** and side wheel **86** to specific components that may be used in the LID module **28**. Device drivers **520** are used to access various Module Specific Components **524** through a communications link **528**. These Module Specific Components **524** may be a cellular telephone, a GPS receiver, a camera, a biometric identification device, a television receiver, removable media, and various wireless protocols such as WiFi and Bluetooth, to name a few. Finally, a suitable real time operating system ("RTOS") **530** is executed by the low power processor **110** from the system memory **186** to provide the functionality of the LID module **28**.

[**0054**] Although the present invention has been described with reference to the disclosed embodiments, persons skilled in the art will recognize that changes may be made in form and detail without departing from the spirit and scope of the invention. Such modifications are well within the skill of those ordinarily skilled in the art. Accordingly, the invention is not limited except as by the appended claims.

We claim:

1. A computer system, comprising:

a computer chassis comprising a base and a lid for the base;

a keyboard mounted on an inner surface of the base for the chassis;

a main display mounted on an inner surface of the lid;

a first processor operatively coupled to the keyboard and main display;

an auxiliary display mounted on an outer surface of the lid;

a keypad mounted on the outer surface of the lid;

a second processor having less computing performance than the first processor and consuming substantially less power than the first processor, the second processor being operatively coupled to the auxiliary display and keypad; and

a power controller operatively coupled to the first and second processors, the power controller causing the computer system to operate in either a high power mode or a low power mode.

2. The computer system of claim 1 wherein the power controller causes power to be applied to the first processor in the high power mode and causes power to be removed from the first processor and applied to the second processor in the low power mode, the second processor operating with the auxiliary display and the keypad to provide functionality in the low power mode that is less than the functionality of the computer system provided in the high power mode.

3. The computer system of claim 2 wherein the power controller is operative to cause power to be applied to the second processor in the high power mode so that the second processor is operative in the high power mode.

4. The computer system of claim 2 wherein the power controller is operative to cause power to be removed from the auxiliary display in the high power mode so that the auxiliary display provides no functionality to the computer system.

5. The computer system of claim 2 wherein the power controller is operative to cause power to be removed from the keypad in the high power mode so that the auxiliary display provides no functionality to the computer system.

6. The computer system of claim 1, further comprising an auxiliary random access memory operatively coupled to the second processor and being powered in the low power mode, the auxiliary random access memory hosting the execution environment of an operating system and at least one application program that are accessed by the second processor in the low power. mode.

7. The computer system of claim 6, further comprising a non-volatile memory storing the operating system and the at least one application program, the operating system and the at least one application program being transferred from the non-volatile memory to the auxiliary memory for execution by the second processor.

8. The computer system of claim 7 wherein the non-volatile memory comprises a read only memory device.

9. The computer system of claim 1 wherein the second processor accesses at least one application program in the low power mode.

10. The computer system of claim 9 wherein the application program comprises an email application program.

11. The computer system of claim 10 wherein the email application program is operable to periodically synchronize email messages without user action.

12. The computer system of claim 11 wherein the email application program is operable to select whether attachments will be downloaded with the periodically synchronized email messages.

13. The computer system of claim 6 wherein the application program comprises an appointment calendar application program.

14. The computer system of claim 6 wherein the application program comprises a contact address application program.

15. The computer system of claim 6, further comprising a mass storage device operable to store music files, the mass storage device being coupled to the second processor and being powered in the low power mode, and wherein the application program comprises a music player application program.

16. The computer system of claim 6 further comprising a side wheel that can provide user input for use by the at least one application program in the low power mode.

17. The computer system of claim 1, further comprising a wireless transceiver coupled to the second processor and being powered in the low power mode, the wireless transceiver being operatively coupled to the second processor to provide wireless communication capability in the low power mode.

18. The computer system of claim 2, wherein the first processor accesses a first application running on a first operating system platform, and wherein the second processor accesses a second application running on a second operating system platform.

19. The computer system of claim 18 wherein the first processor is operable to access the second application in both the high power mode and the low power mode.

20. The computer system of claim 18 wherein the second processor is operable to access the first application in both the high power mode and the low power mode.

21. The computer system of claim 20 wherein the second processor is operable to access the first application in the low power mode by use of an application protocol message.

22. The computer system of claim 21 wherein the application protocol message comprises a type field identifying an application pertaining to the application protocol message, the application protocol message further comprising a data field having a format corresponding to the application identified by the type field.

23. The computer system of claim 20 wherein the application protocol message is operable to configure the first application so that the first application provides plug and play compatibility to features provided by applications accessed by the second processor.

24. The computer system of claim 20 the second processor is operable to cause the power controller to apply power to the first processor when the computer system is in the low power mode.

25. A computer system, comprising:

a main computer chassis, comprising:

a keyboard;

a main display;

a first processor operatively coupled to the keyboard and main display; and

a first operating system running on the first processor;

an auxiliary computer module, comprising:

an auxiliary user interface device;

a second processor having less computing performance than the first processor and consuming substantially less power than the first processor, the second processor being operatively coupled to the auxiliary user interface device; and

a second operating system running on the second processor; and

a power controller operatively coupled to the first and second processors, the power controller causing the computer system to operate in either a high power mode or a low power mode.

26. The computer system of claim 25 wherein the power controller causes power to be applied to the first processor in the high power mode and causes power to be removed from the first processor and applied to the second processor in the low power mode, the second processor operating with the auxiliary user interface device to provide functionality in the low power mode that is substantially less than the functionality of the computer system provided in the high power mode.

27. The computer system of claim 26 wherein the power controller is operative to cause power to be applied to the second processor in the high power mode so that the second processor is operative in the high power mode.

28. The computer system of claim 25 wherein the user interface device comprises an auxiliary display and a keypad.

29. The computer system of claim 26 wherein the power controller is operative to cause power to be removed from the auxiliary display in the high power mode so that the auxiliary display provides no functionality to the computer system.

30. The computer system of claim 26 wherein the power controller is operative to cause power to be removed from the keypad in the high power mode so that the auxiliary display provides no functionality to the computer system.

31. The computer system of claim 26 wherein the auxiliary computer module further comprises a random access memory operatively coupled to the second processor and being powered in the low power mode, the auxiliary random access memory storing the operating system and at least one application program that are accessed by the second processor in the low power mode.

32. The computer system of claim 31 wherein the auxiliary computer module further comprises a non-volatile memory storing the operating system and the at least one application program, the operating system and the at least one application program being transferred from the non-volatile memory to the auxiliary memory for execution by the second processor.

33. The computer system of claim 25 wherein the second processor accesses at least one application program in the low power mode.

34. The computer system of claim 33 wherein the application program comprises an email application program.

35. The computer system of claim 34 wherein the email application program is operable to periodically download email messages without user action.

36. The computer system of claim 35 wherein the email application program is operable to select whether attachments will be downloaded with the periodically downloaded email messages.

37. The computer system of claim 33 wherein the application program comprises an appointment calendar application program.

38. The computer system of claim 33 wherein the application program comprises a contact address application program.

39. The computer system of claim 33 wherein the main computer chassis further comprises a mass storage device operable to store music files, the mass storage device being coupled to the second processor and being powered in the low power mode, and wherein the application program comprises a music player application program.

40. The computer system of claim 33 wherein the main computer chassis further comprises a side wheel that may provide user input for use by the at least one application program in the low power mode.

41. The computer system of claim 26, further comprising a wireless transceiver coupled to the second processor and being powered in the low power mode, the wireless transceiver being operatively coupled to the second processor to provide wireless communication capability in the low power mode.

42. The computer system of claim 26 wherein the auxiliary computer module is operable to access an application running on the first operating system using the first processor by use of an application protocol message passed between the auxiliary computer module and the main computer chassis.

43. The computer system of claim 42 wherein the application protocol message comprises a type field identifying an application pertaining to the application protocol message, the application protocol message further comprising a data field having a format corresponding to the application identified by the type field.

44. The computer system of claim 42 wherein the application protocol message is operable to configure the application running on the first operating system so that the application running in the main computer chassis on the first operating system provides plug and play compatibility for features provided by the auxiliary computer module.

45. The computer system of claim 42 wherein the application protocol message is passed from the auxiliary computer module to the main computer chassis.

46. The computer system of claim 45 wherein the main computer chassis further comprises a module service to which the application protocol message is passed, the module service being operative to extract control information from the application protocol to control the running of the application running on the first operating system.

47. The computer system of claim 42 wherein the application protocol message is passed from the auxiliary computer module to the main computer chassis.

48. The computer system of claim 47 wherein the main computer chassis further comprises a module service from which the application protocol message is passed, the module service being operative to generate the application

protocol from data passed to the module service by the application running on the first operating system using the first processor.

49. A computer system, comprising:

a main computer chassis having a first processor running first application on a first operating system platform; and

an auxiliary computer module having a second processor running a second application on a second operating system platform, an application protocol message passing between the auxiliary computer module and the main computer chassis in connection with the running of the first application on the first operating system platform.

50. The computer system of claim 49 wherein the application protocol message comprises a type field identifying an application pertaining to the application protocol message, the application protocol message further comprising a data field having a format corresponding to the application identified by the type field.

51. The computer system of claim 49 wherein the application protocol message is operable to configure the first application running on the first operating system platform so that the main computer chassis provides plug and play compatibility for features provided by the auxiliary computer module.

52. The computer system of claim 49 wherein the application protocol message is passed from the auxiliary computer module to the main computer chassis.

53. The computer system of claim 49 wherein the main computer chassis further comprises a module service to which the application protocol message is passed, the module service being operative to extract control information from the application protocol to control the running of the first application running on the first operating system platform.

54. The computer system of claim 49 wherein the application protocol message is passed from the auxiliary computer module to the main computer chassis.

55. The computer system of claim 54 wherein the main computer chassis further comprises a module service from which the application protocol message is passed, the module service being operative to generate the application protocol from data passed to the module service by the first application running on the first operating system platform.

56. The computer system of claim 49 wherein the main computer chassis further comprises a power controller operatively coupled to the first and second processors, the power controller causing the computer system to operate in either a high power mode or a low power mode, the power controller causing power to be applied to the first processor in the high power mode and causing power to be removed from the first processor and applied to the second processor in the low power mode, the second processor operating with the auxiliary display and the keypad to provide functionality in the low power mode that is substantially less than the functionality of the computer system provided in the high power mode.

57. The computer system of claim 49 wherein the first application running on the first operating system platform comprises a media player application.

58. The computer system of claim 49 wherein the first application running on the first operating system platform comprises an email application.

59. The computer system of claim 58 wherein the email application is operable to periodically download email messages without user action.

60. The computer system of claim 59 wherein the email application is operable to allow selection of whether attachments will be downloaded with the periodically downloaded email messages.

61. The computer system of claim 49 wherein the first application running on the first operating system platform comprises a voice memo application.

62. The computer system of claim 49 wherein computer system software, including the first operating system and the first application, run on the first computer processor, and wherein auxiliary computer module software, including the second operating system and the second application, run on the second computer processor, and wherein the computer system further comprises a module service that interfaces the computer system software with the auxiliary computer module software using application protocol messages, the application protocol messages providing information about the auxiliary computer system software to configure the computer system software.

63. The computer system of claim 62, further comprising an auxiliary computer module detection manager that provides information about properties of a plurality of components in the auxiliary computer module to allow the module service to configure the computer system software.

64. The computer system of claim 62, further comprising a configuration wizard that is operable to configure the computer system software using the application protocol messages providing information about the auxiliary computer system software.

65. A method of operating a computer system having a first processor operatively coupled to a main display and a second processor operatively coupled to an auxiliary display, the first processor having substantially higher performance and substantially higher power consumption than the second processor, the method comprising:

in a high power mode, applying power to the first processor so that the first processor can function with the main display in the high power mode; and

in a low power operating mode, removing power to the first processor and applying power to the second processor so that the second processor can function with the auxiliary display in the low power operating mode.

66. The method of claim 65, further comprising applying power to the second processor in the high power mode so that the second processor and auxiliary display are functional in the high power mode.

67. The method of claim 65, further comprising passing an application protocol message between the first processor and the second processor in connection with the running of a first application using the first processor.

68. The method of claim 67 wherein the application protocol message comprises a type field identifying an application pertaining to the application protocol message, the application protocol message further comprising a data field having a format corresponding to the application identified by the type field.

69. The method of claim 67 wherein the application protocol message is operable to configure the first application to provide plug and play compatibility for features provided by the first application.

70. The method of claim 67 wherein the application protocol message is passed from the second processor to the first processor.

71. The method of claim 70 wherein the computer system further comprises a module service to which the application protocol message is passed, and wherein the method further comprises using the module service to extract control information from the application protocol to control the running of a first application using the first processor.

72. The method of claim 67 wherein the application protocol message is passed from the second processor to the first processor.

73. The method of claim 72 wherein the computer system further comprises a module service to which the application protocol message is passed, and wherein the method further comprises using the module service to generate the application protocol from data passed to the module service by the first application.

74. A method of operating a computer system having a main computer chassis running a first application on a first operating system platform, and an auxiliary computer module running a second application on a second operating system platform, the method comprising passing an application protocol message passing between the auxiliary computer module and the main computer chassis in connection with the running of the first application on the first operating system platform.

75. The method of claim 74 wherein the application protocol message comprises a type field identifying an application pertaining to the application protocol message, the application protocol message further comprising a data field having a format corresponding to the application identified by the type field.

76. The method of claim 74, further comprising using the application protocol message to configure the first application running on the first operating system platform so that the main computer chassis provides plug and play compatibility for features provided by the auxiliary computer module.

77. The method of claim 74 wherein the application protocol message is passed from the auxiliary computer module to the main computer chassis.

78. The method of claim 74 wherein the main computer chassis further comprises a module service to which the application protocol message is passed, and wherein the method further comprises using the module service to extract control information from the application protocol to control the running of the first application running on the first operating system platform.

79. The method of claim 74 wherein the application protocol message is passed from the auxiliary computer module to the main computer chassis.

80. The method of claim 79 wherein the main computer chassis further comprises a module service from which the application protocol message is passed, and wherein the method further comprises using the module service to generate the application protocol from data passed to the module service by the first application running on the first operating system platform.

81. The method of claim 74 wherein the application protocol message provides information about the second application that is sufficient to configure the first application.

82. The method of claim 74, further comprising providing to the first application information about the properties of components in the auxiliary computer module that is sufficient to allow the first application to be configured.

83. The method of claim 74 wherein the main computer chassis further comprises a first processor running the first application on the first operating system platform, and the auxiliary computer module comprises a second processor running the second application on the second operating system platform, and wherein the method further comprises operating the computer system in either a high power mode or a low power mode, power being applied to the first processor in the high power mode and power being removed from the first processor and applied to the second processor in the low power mode.

84. The method of claim 74 wherein the first application running on the first operating system platform comprises a media player application.

85. The method of claim 74 wherein the first application running on the first operating system platform comprises an email application.

86. The method of claim 85 wherein the method further comprises periodically downloading email messages without user action.

87. The method of claim 86 wherein the method further comprises allowing selection of whether attachments will be downloaded with the periodically downloaded email messages.

88. The method of claim 74 wherein the first application running on the first operating system platform comprises a voice memo application.

* * * * *