US012642422B2

(12) **United States Patent**
Feddema et al.

(10) **Patent No.: US 12,642,422 B2**
(45) **Date of Patent: Jun. 2, 2026**

(54) **DISHWASHER WITH A DISH RACK**

(71) Applicant: **WHIRLPOOL CORPORATION**, Benton Harbor, MI (US)

(72) Inventors: **Mark S. Feddema**, Kalamazoo, MI (US); **William J. Snell**, Elkhart, IN (US); **Sachie Kakehi**, St. Joseph, MI (US); **Steven B. Balinski**, Rockford, MN (US); **David Jason Brightbill**, Berrien Ceter, MI (US); **Joseph T. Ferencevich**, St. Joseph, MI (US); **Sujit S. Naik**, St. Joseph, MI (US); **Frederick Thomas Roderick**, Coloma, MI (US); **Ryan Kevin Roth**, Grandville, MI (US)

(73) Assignee: **Whirlpool Corporation**, Benton Harbor, MI (US)

(*) Notice: Subject to any disclaimer, the term of this patent is extended or adjusted under 35 U.S.C. 154(b) by 0 days.

(21) Appl. No.: **19/452,686**

(22) Filed: **Jan. 19, 2026**

(65) **Prior Publication Data**

US 2026/0137262 A1 May 21, 2026

Related U.S. Application Data

(63) Continuation of application No. 19/297,954, filed on Aug. 12, 2025, now Pat. No. 12,543,922, which is a
(Continued)

(51) **Int. Cl.**
A47L 15/50 (2006.01)
A47L 15/22 (2006.01)
(Continued)

(52) **U.S. Cl.**
CPC ***A47L 15/502*** (2013.01); ***A47L 15/22*** (2013.01); ***A47L 15/4217*** (2013.01);
(Continued)

(58) **Field of Classification Search**
None
See application file for complete search history.

(56) **References Cited**

U.S. PATENT DOCUMENTS

7,365 A 5/1850 Houghton
51,000 A 11/1865 Alexader
(Continued)

FOREIGN PATENT DOCUMENTS

BR 112018070373 A2 1/2019
CN 1579313 A 2/2005
(Continued)

OTHER PUBLICATIONS

Dons Appliances, An Overview of KitchenAid Dishwasher KDTM404KPS, announced in YouTube on Jan. 19, 2021 [online], [site visited Apr. 5, 2022], Available from the internet URL: https://www.youtube.com/watch?v=2gO_C6t6tBM , An Overview of KitchenAid Dishwasher (KDTM404KPS) | KitchenAid Dishwasher Review 2021 (Year: 2021).
(Continued)

Primary Examiner — Rita P Adhlakha
(74) *Attorney, Agent, or Firm* — Price Heneveld LLP

(57) **ABSTRACT**

A dishwasher includes a tub that defines a dish treating chamber. First and second lower dish racks are located in the dish treating chamber. An upper dish rack is located above the first and second lower dish racks in the dish treating chamber. The upper dish rack defines a planar portion on a first side of the upper dish rack and a depression on a second side of the upper dish rack. The depression includes a first and second angled walls which define first and second sets of cup seats, respectively. The first set of cups seats is configured to angle an opening of a drinking vessel positioned in the first set of cup seats toward an opening of a drinking vessel positioned in the second set of cup seats. The
(Continued)

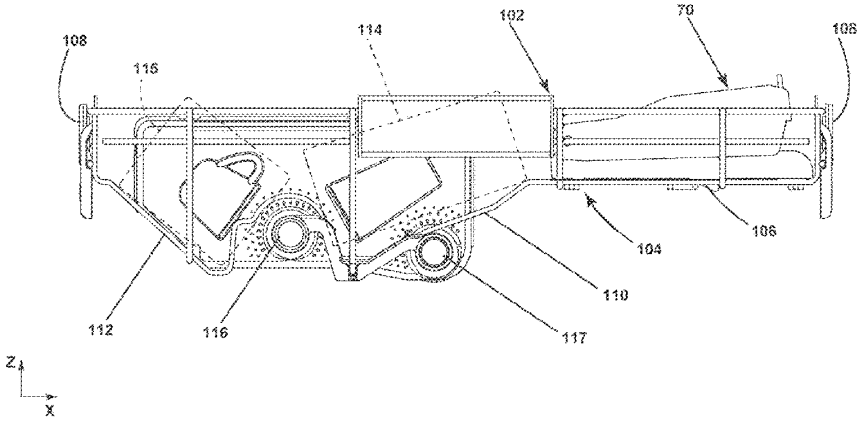

planar portion is configured to support a plurality of utensil holders configured to horizontally support utensils.

27 Claims, 9 Drawing Sheets

Related U.S. Application Data

continuation of application No. 19/039,228, filed on Jan. 28, 2025, which is a continuation of application No. 18/535,327, filed on Dec. 11, 2023, now Pat. No. 12,232,681, which is a continuation of application No. 17/830,947, filed on Jun. 2, 2022, now Pat. No. 11,864,712, which is a continuation of application No. 16/833,984, filed on Mar. 30, 2020, now Pat. No. 11,375,874.

(51) **Int. Cl.**
A47L 15/42 (2006.01)
A47L 15/46 (2006.01)

(52) **U.S. Cl.**
CPC ***A47L 15/4221*** (2013.01); ***A47L 15/4246*** (2013.01); ***A47L 15/428*** (2013.01); ***A47L 15/46*** (2013.01); ***A47L 15/503*** (2013.01); ***A47L 15/505*** (2013.01)

(56) **References Cited**

U.S. PATENT DOCUMENTS

355,139	A	12/1886	Cochrane
2,527,178	A	10/1950	Elsaesser
2,648,588	A	8/1953	Ruspino
2,734,520	A	2/1956	Abresch et al.
2,745,707	A	5/1956	Sebens
2,910,207	A	10/1959	Andrew
2,987,260	A	6/1961	Sasnett
3,040,901	A	6/1962	Andrew
3,044,842	A	7/1962	Abresch et al.
D196,450	S	10/1963	Claywell
3,269,548	A	8/1966	Geiger et al.
3,361,361	A	1/1968	Schutte
D212,121	S	8/1968	Tuthill
3,402,975	A	9/1968	Smith
3,433,363	A	3/1969	Clearman et al.
3,464,566	A	9/1969	Gilson
3,752,322	A	8/1973	Fiocca et al.
4,046,261	A	9/1977	Yake
4,339,051	A	7/1982	Crawford
4,402,556	A	9/1983	Schwind
4,475,656	A	10/1984	Collier
4,917,248	A	4/1990	Friskney
5,158,185	A	10/1992	Michael et al.
5,205,419	A	4/1993	Purtilo
5,332,105	A	7/1994	Standfield
D376,451	S	12/1996	Osborn
5,601,195	A	2/1997	Finola et al.
5,626,242	A	5/1997	Weizer
D383,505	S	9/1997	Wise et al.
D383,879	S	9/1997	Good
5,673,714	A	10/1997	Campagnolo et al.
D393,505	S	4/1998	Good
D398,092	S	9/1998	Good
6,571,965	B1	6/2003	Beck et al.
6,848,585	B2	2/2005	VanLandingham
6,869,029	B2	3/2005	Ochoa, Sr. et al.
7,032,604	B2	4/2006	Welch
7,231,929	B2	6/2007	Landsiedel et al.
7,594,513	B2	9/2009	Vanderroest et al.
7,621,286	B2	11/2009	Frei et al.
7,896,977	B2	3/2011	Gillum et al.
8,007,598	B2	8/2011	Chen et al.
8,168,006	B2	5/2012	Bengston et al.
8,408,403	B2	4/2013	Hedstrom et al.
8,646,620	B2	2/2014	Klump et al.
8,651,287	B2	2/2014	Moser et al.
8,778,094	B2	7/2014	Blanchard et al.
8,801,863	B2	8/2014	Blanchard et al.
8,813,766	B2	8/2014	Bhajak et al.
8,820,544	B2	9/2014	Lindgren et al.
8,915,560	B2	12/2014	Cox et al.
9,113,773	B2	8/2015	Bartloff et al.
D739,094	S	9/2015	Ovesen
9,241,607	B2	1/2016	Porcaro, II et al.
D750,854	S	3/2016	Lee et al.
D750,855	S	3/2016	Lee et al.
9,295,369	B2	3/2016	Fauth et al.
9,326,657	B2	5/2016	Thiyagarajan
9,420,938	B2	8/2016	Forst et al.
9,445,703	B2	9/2016	Hiedel et al.
9,510,729	B2	12/2016	Fey et al.
9,532,701	B2	1/2017	Feddema et al.
9,579,009	B2	2/2017	Bhajak et al.
9,596,731	B1	3/2017	Lin
9,596,975	B2	3/2017	Bhajak et al.
9,609,999	B2	4/2017	Delle
9,629,516	B2	4/2017	Chen et al.
9,901,240	B2	2/2018	Lee
9,914,155	B2	3/2018	Disch et al.
9,949,613	B2	4/2018	Blanchard et al.
10,045,681	B2	8/2018	Schessl et al.
D827,953	S	9/2018	Lee et al.
10,349,804	B2	7/2019	Tuller
10,463,226	B2	11/2019	Mesa et al.
10,512,385	B2	12/2019	Tuller et al.
10,602,910	B2	3/2020	Gutkowski
10,638,912	B1	5/2020	Visin et al.
10,716,449	B2	7/2020	Balinski et al.
D900,417	S	10/2020	Baldwin et al.
10,835,098	B2	11/2020	Disch et al.
10,888,212	B2	1/2021	Feddema et al.
10,952,589	B2	3/2021	Brightbill et al.
11,006,813	B2	5/2021	Naik et al.
D927,101	S	8/2021	Baldwin et al.
11,179,019	B2	11/2021	Sayir
11,219,350	B2	1/2022	Fawaz et al.
D950,877	S	5/2022	Tuang
11,337,583	B2	5/2022	Feddema et al.
D956,372	S	6/2022	Pugh et al.
D957,779	S	7/2022	Zang
11,375,874	B2	7/2022	Feddema et al.
D960,466	S	8/2022	Viswanathan et al.
11,484,180	B2	11/2022	Dietrich et al.
D973,290	S	12/2022	Naik et al.
D977,768	S	2/2023	Ding et al.
2003/0226580	A1	12/2003	Welch
2005/0109378	A1	5/2005	Landsiedel et al.
2005/0241680	A1	11/2005	Noh
2006/0127051	A1	6/2006	Tsumagari et al.
2006/0237051	A1	10/2006	Bengston et al.
2006/0250058	A1	11/2006	Stevens et al.
2006/0254992	A1	11/2006	Lim
2006/0254994	A1	11/2006	Lim
2007/0158472	A1	7/2007	Calhoun et al.
2007/0247039	A1	10/2007	Anderson et al.
2008/0083678	A1	4/2008	Graute
2008/0109387	A1	5/2008	Deaver et al.
2008/0169009	A1	7/2008	Mailander
2009/0120883	A1	5/2009	Jadhav et al.
2009/0159103	A1	6/2009	Gillum et al.
2009/0255560	A1	10/2009	Lehmann et al.
2009/0320883	A1	12/2009	Falk
2010/0101611	A1	4/2010	Chen et al.
2010/0235008	A1	9/2010	Forbes, Jr. et al.
2011/0139181	A1	6/2011	Lee et al.
2011/0203616	A1	8/2011	Berner et al.
2012/0138106	A1	6/2012	Fountain et al.
2012/0298598	A1	11/2012	Ennen et al.
2013/0002107	A1	1/2013	Paschini et al.
2013/0255733	A1	10/2013	Ju et al.
2014/0190528	A1	7/2014	Wegener et al.
2015/0053238	A1	2/2015	Lee et al.

(56) **References Cited**

U.S. PATENT DOCUMENTS

2015/0129004	A1	5/2015	Lee et al.
2015/0190033	A1	7/2015	Shaffer et al.
2015/0196189	A1	7/2015	Shaffer et al.
2015/0201823	A1	7/2015	Poojary et al.
2015/0245762	A1	9/2015	Tuller
2015/0320290	A1	11/2015	Hederstierna
2017/0135547	A1	5/2017	Tuller
2017/0285081	A1	10/2017	Silverman
2017/0292999	A1	10/2017	Turner et al.
2018/0220867	A1	8/2018	Carr et al.
2018/0242816	A1	8/2018	Cao et al.
2019/0290094	A1	9/2019	Balinski et al.
2019/0290097	A1	9/2019	Naik et al.
2019/0298146	A1	10/2019	Gutkowski
2020/0027096	A1	1/2020	Cooner
2020/0187750	A1	6/2020	Feddema et al.
2021/0076900	A1	3/2021	Feddema et al.
2021/0298561	A1	9/2021	Feddema et al.
2023/0066054	A1	3/2023	Feddema

FOREIGN PATENT DOCUMENTS

CN	101049224	A	10/2007
CN	101612027	A	12/2009
CN	101966069	A	2/2011
CN	102215985	A	10/2011
CN	104905745	A	9/2015
CN	105431070	A	3/2016
CN	105496336	A	4/2016
CN	109475265	A	4/2016
CN	105559725	A	5/2016
CN	106073675	A	11/2016
CN	205697665	U	11/2016
CN	106923767	A	7/2017
CN	106998989	A	8/2017
CN	107320043	A	11/2017
CN	108135432	A	6/2018
CN	109259690	A	1/2019
CN	106343937	B	12/2019
CN	304875005	S	10/2020
CN	307125899	S	2/2022
DE	6810173	U	8/1969
DE	2907916	A1	9/1980
DE	9317963	U1	3/1995
DE	102009033895	A1	4/2010
DE	102013213612	A1	1/2015
DE	102014208843	A1	11/2015
DE	102014223373	B3	11/2015
DE	102017200272	A1	7/2018
EP	0186157	A1	7/1986
EP	0963733	A1	12/1999
EP	1138249	A2	10/2001
EP	1334687	A1	8/2003
EP	2192852	B1	9/2011
EP	2368479	A1	9/2011
EP	2594186	B1	1/2014
EP	2815690	A1	12/2014
EP	2912983	A2	9/2015
EP	3222191	A1	9/2017
EP	3439527	A1	2/2019
FR	2643809	A1	9/1990
GB	219103	A	7/1924
GB	1123787	A	8/1968
GB	2058852	A	4/1981
KR	200300795	Y1	12/2002
KR	20050068480	A	7/2005
KR	101217384	B1	12/2012
KR	301079101	S	10/2020
KR	301079752	S	10/2020
KR	301079754	S	10/2020
KR	301130470	S	10/2021
WO	2009041899	A1	4/2009
WO	2014094897	A1	6/2014
WO	2016206712	A1	12/2016
WO	2017176286	A1	10/2017
WO	2018082321	A1	5/2018

OTHER PUBLICATIONS

Appliance Factory Parts, Part GEHWD28X10210, available in https://www.appliancefactoryparts.com customer review oldest date Dec. 27, 2014 [online], [site visited Apr. 5, 2022], Available from the internet URL: https://www.appliancefactoryparts.com/search/part/1109159/, (Year: 2014).

Bosch Customer Brochure, 2019, Bosch 800 Series Dishwasher (SHPM88Z75N).

Bosch Press Release, "Bosch Takes Silence to the Next Level with Innovative Dishwasher Line," May 15, 2013, Toronto, ON, Available from the internet URL: https://www.bosch-home.ca/en/press/pressrelease-320 [site visited Dec. 15, 2025].

Jeff Clemens, Grand Blog, "New Bosch Dishwashers Have Arrived At Grand," May 31, 2013, Available from the internet URL: https://grandapplianceandtv.wordpress.com/2013/05/31/new-bosch-dishwashers-have-arrived-at-grand/ [site visited Dec. 15, 2025].

Ed Perratore, Consumer Reports News, "Four new Bosch dishwashers added to our list of top picks," Jul. 18, 2013, Available from the internet URL: https://www.consumerreports.org/cro/news/2013/07/four-new-bosch-dishwashers-added-to-our-list-of-top-picks/index.html [site visited Dec. 15, 2025].

Bosch Home Appliances, GlobeNewswire by notified, "Bosch Home Appliances Revolutionizes Dishwasher Category with New Advanced Drying Technologies," "New Dishwasher Line Answers Demand for Superior Drying and Cleaning Performance," Feb. 19, 2019, Available from the internet URL: https://www.globenewswire.com/news- release/2019/02/19/1734216/0/en/Bosch-Home-Appliances-Revolutionizes-Dishwasher-Category-with-New-Advanced-Drying-Technologies.html [site visited Dec. 15, 2025].

ABT Electronics, YouTube Video, "Bosch 800 Series Dishwasher SHPM88Z75N," Apr. 5, 2022, Available from the internet URL: https://www.youtube.com/watch?v=v8lwDWJc-CQ [site visited Dec. 15, 2025].

Dr. Kimberly K. Cameron, "Expert Declaration of Dr. Kimberly K. Cameron Regarding Non-Infringement and Invalidity of the Asserted Patents" and related exhibits, U.S. District Court for the Eastern District of Texas Marshall Division, Civil Action No. 2:25-cv-01042-JRG-RSP, Dated Dec. 12, 2025.

Samsung Electronics Co, Ltd., *Samsung Electronics America, Inc. V. Whirlpool Corporation*, Petition for Inter Partes Review of U.S. Pat. No. 10,512,385, Case No. IPR2026-00337, Submitted by Benjamin Haber (Reg. No. 67,129), Dated Apr. 15, 2026.

Samsung Electronics Co, Ltd., *Samsung Electronics America, Inc. V. Whirlpool Corporation*, Petition for Post Grant Review of U.S. Pat. No. 12,543,922, Case No. PGR2026-00043, Submitted by Benjamin Haber (Reg. No. 67,129), Dated Apr. 14, 2026.

Samsung Electronics Co, Ltd., *Samsung Electronics America, Inc. V. Whirlpool Corporation*, Petition for Inter Partes Review of U.S. Pat. No. 12,232,681, Case No. IPR2026-00336, Submitted by Benjamin Haber (Reg. No. 67,129), Dated Apr. 13, 2026.

Dr. Kimberly K. Cameron, "Declaration of Dr. Kimberly K. Cameron in Support of Petition for Inter Partes Review of U.S. Pat. No. 10,512,385" and related exhibits, United States Patent and Trademark Office Before The Patent Trial and Appeal Board, Case No. IPR2026-00337, Dated Apr. 15, 2026.

Dr. Kimberly K. Cameron, "Declaration of Dr. Kimberly K. Cameron in Support of Petition for Post Grant Review of U.S. Pat. No. 12,543,922" and related exhibits, United States Patent and Trademark Office Before The Patent Trial and Appeal Board, Case No. PGR2026-00043, Dated Apr. 14.

Dr. Kimberly K. Cameron, "Declaration of Dr. Kimberly K. Cameron in Support of Petition for Inter Partes Review of U.S. Pat. No. 12,232,681" and related exhibits, United States Patent and Trademark Office Before The Patent Trial and Appeal Board, Case No. IPR2026-00336, Dated Apr. 13, 2026.

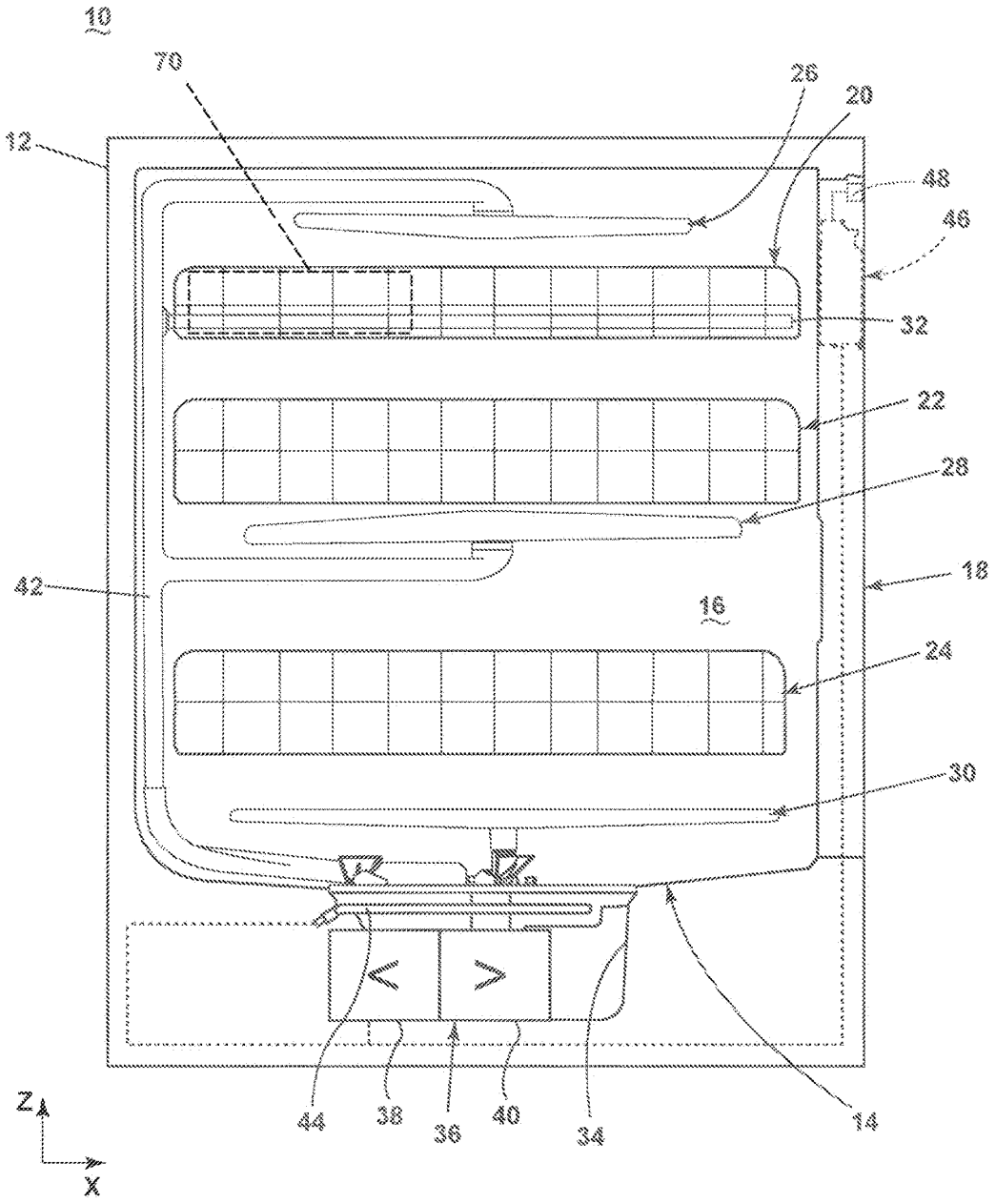

FIG. 1

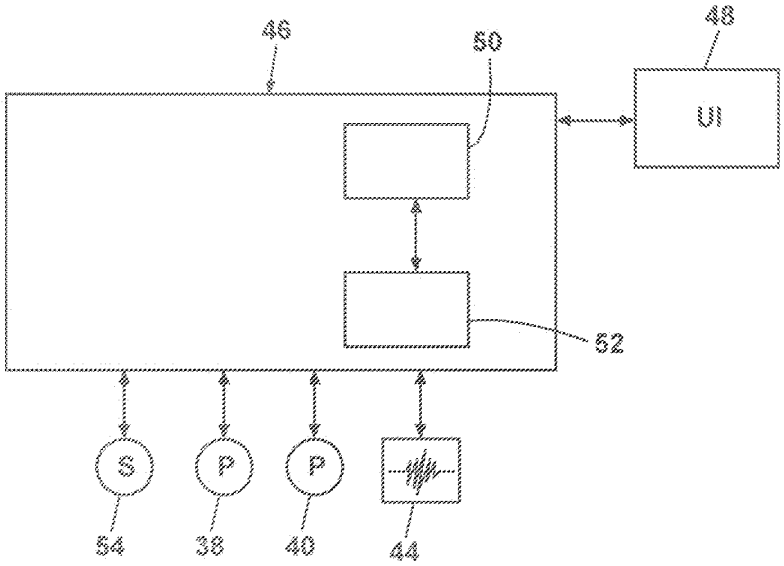

FIG. 2

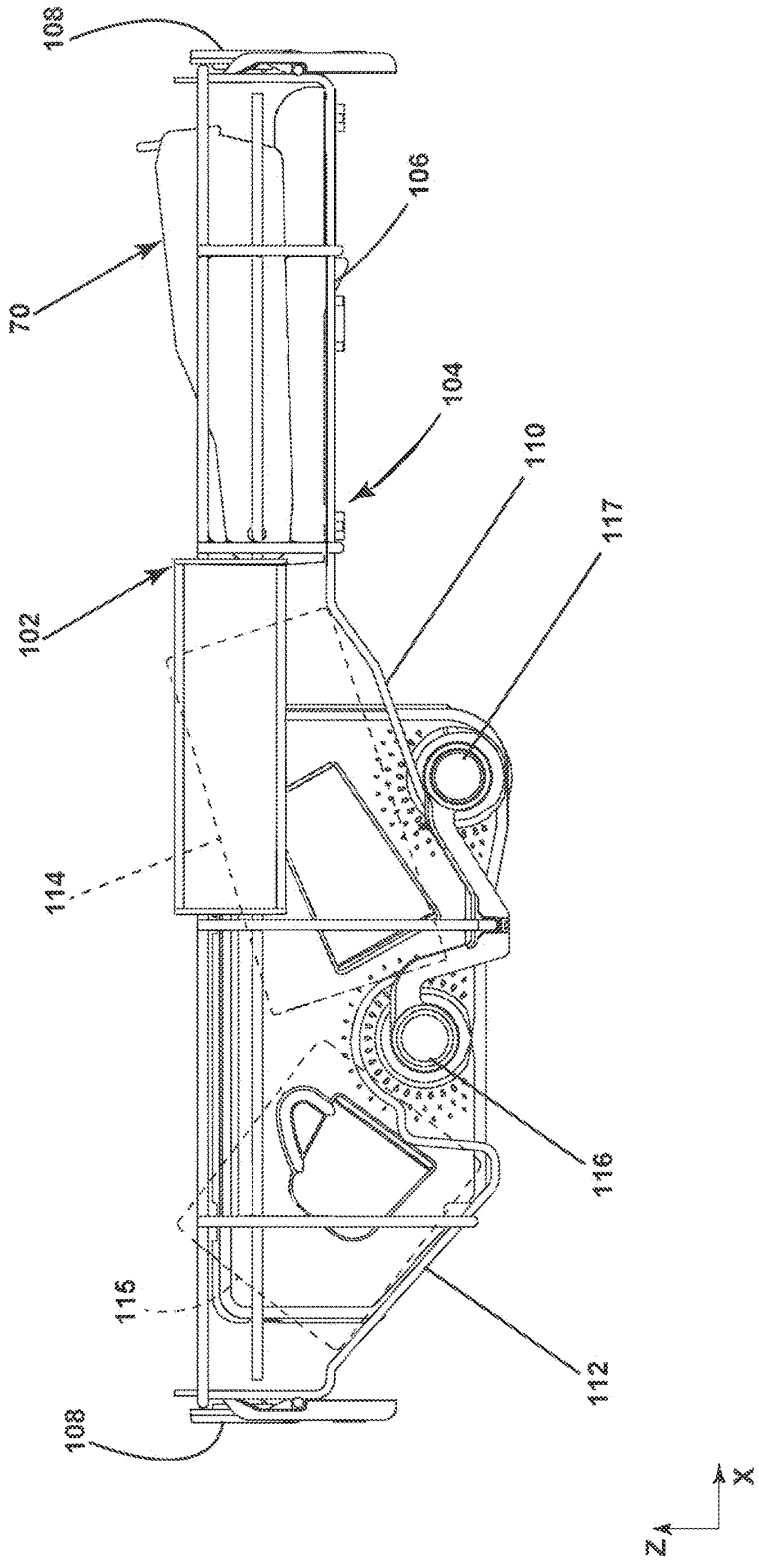

FIG. 3

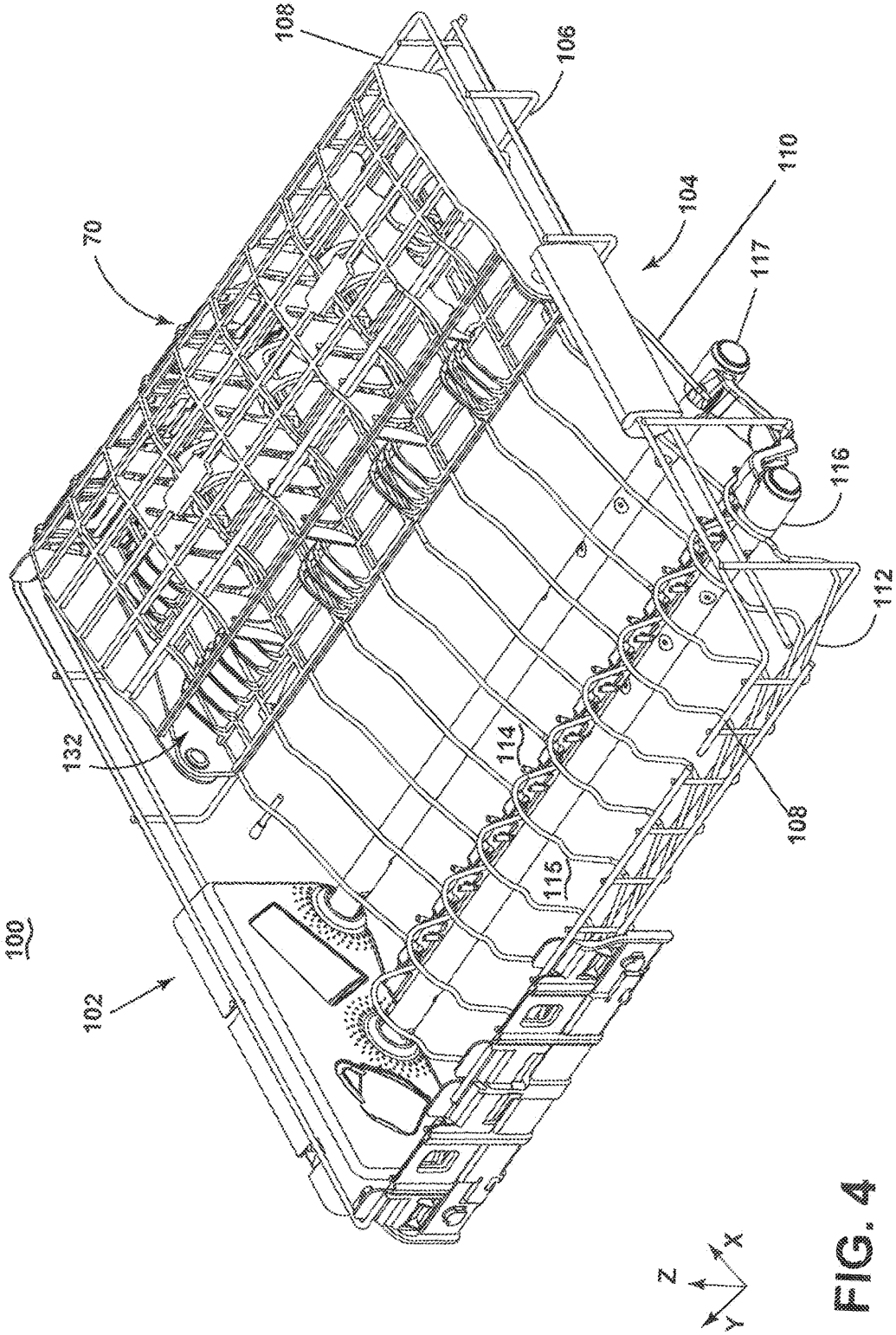

FIG. 4

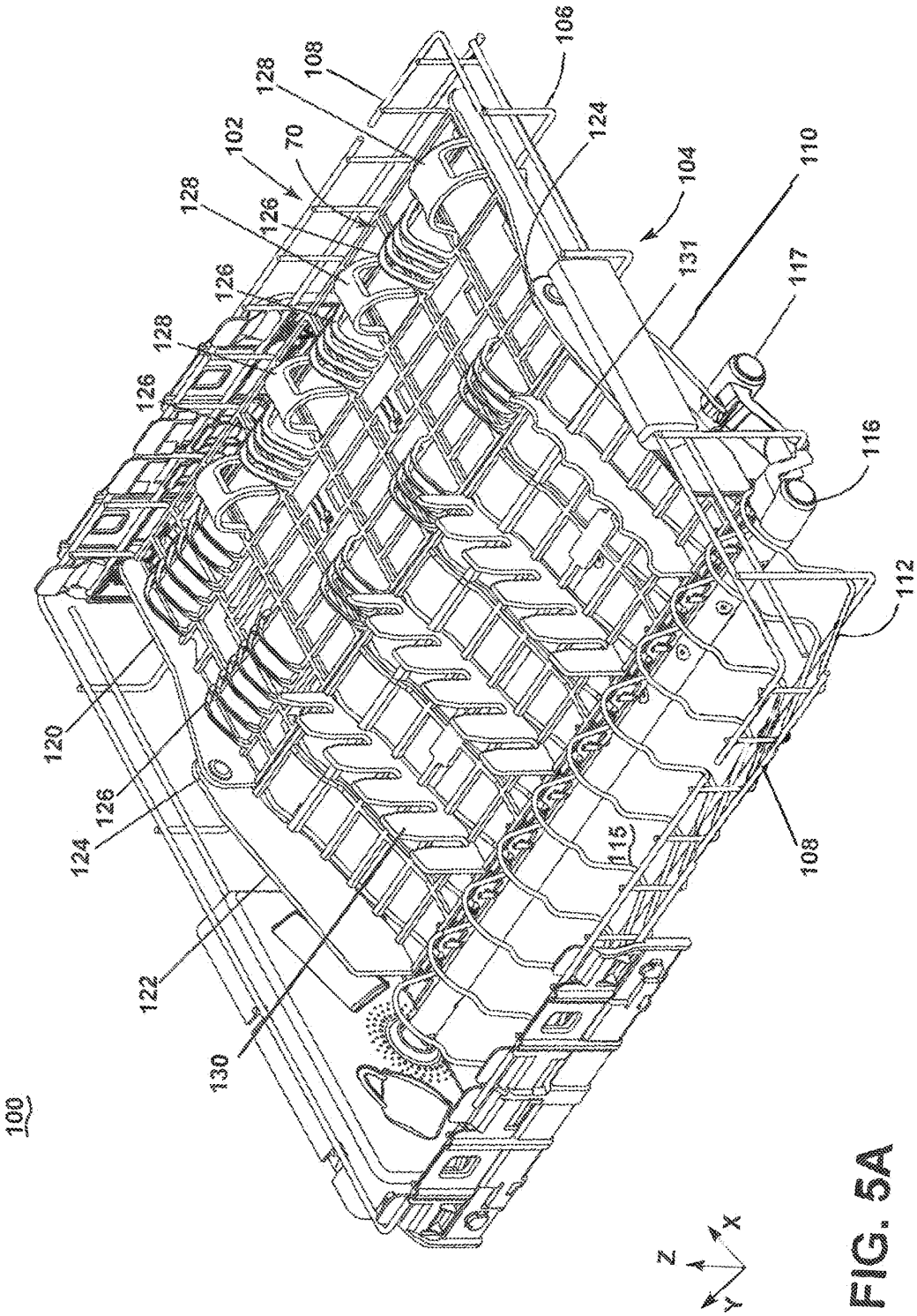
100
102
104
106
108
110
112
115
116
117
120
122
124
126
128
130
131
70
X
Y
Z

FIG. 5A

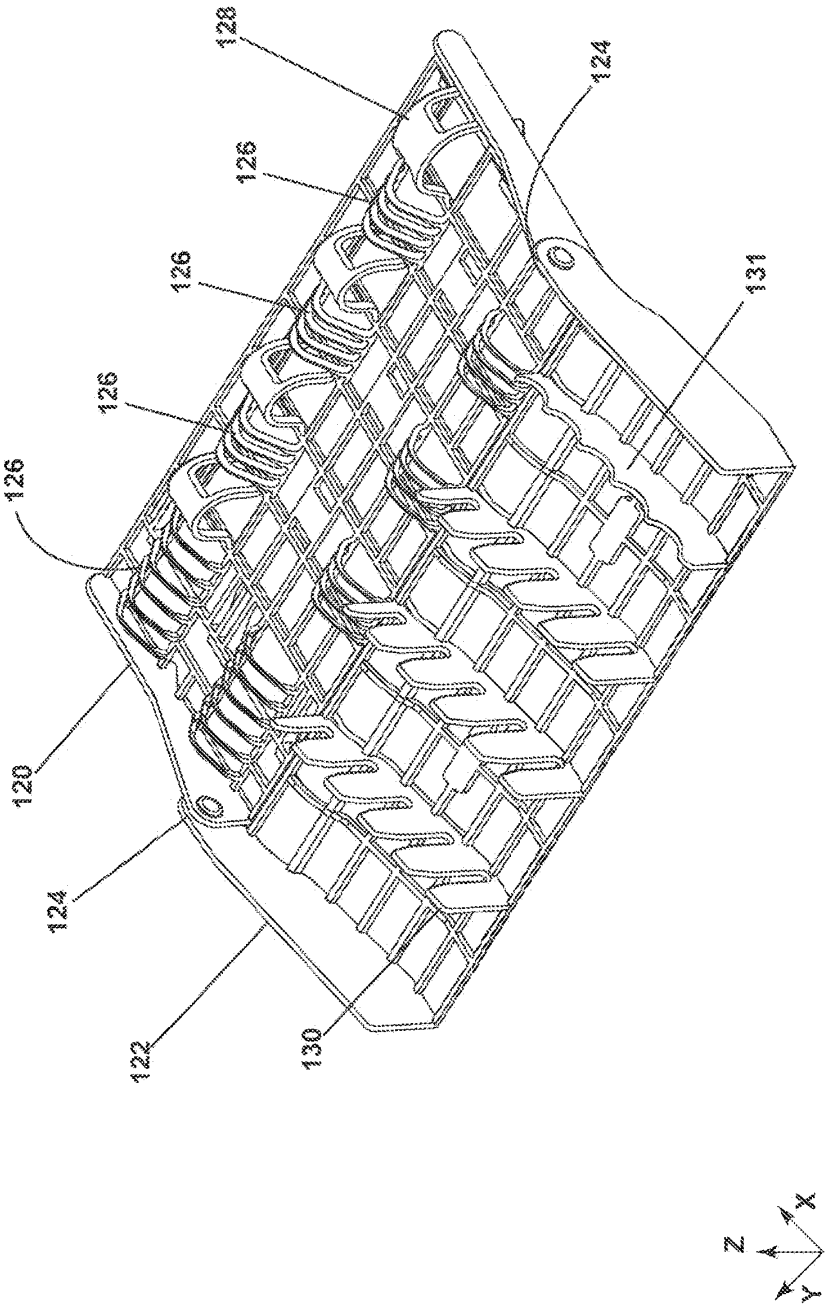

FIG. 5B

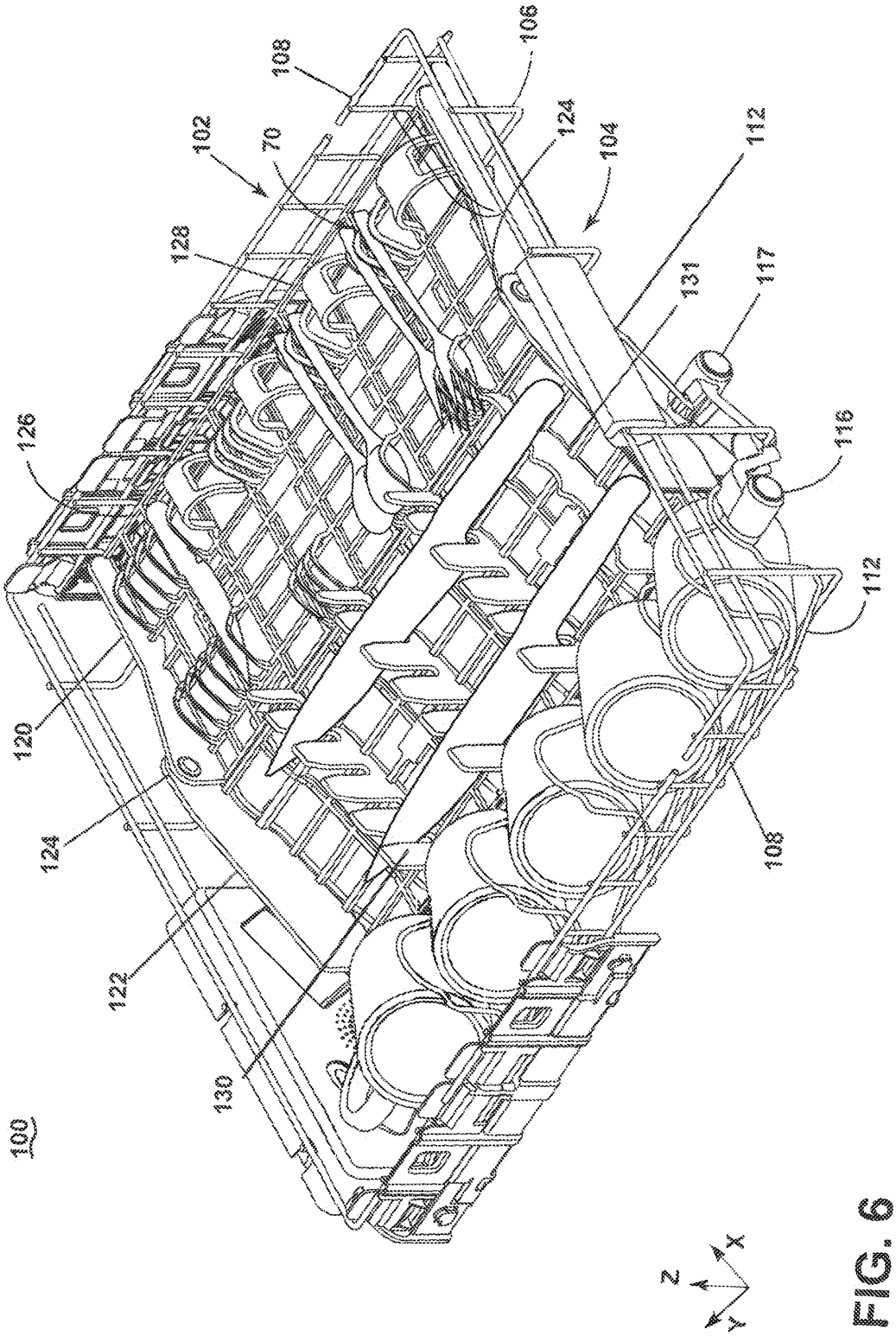
100
102
104
106
108
108
112
112
116
117
120
122
124
124
126
128
130
131
70
Z
X
Y

FIG. 6

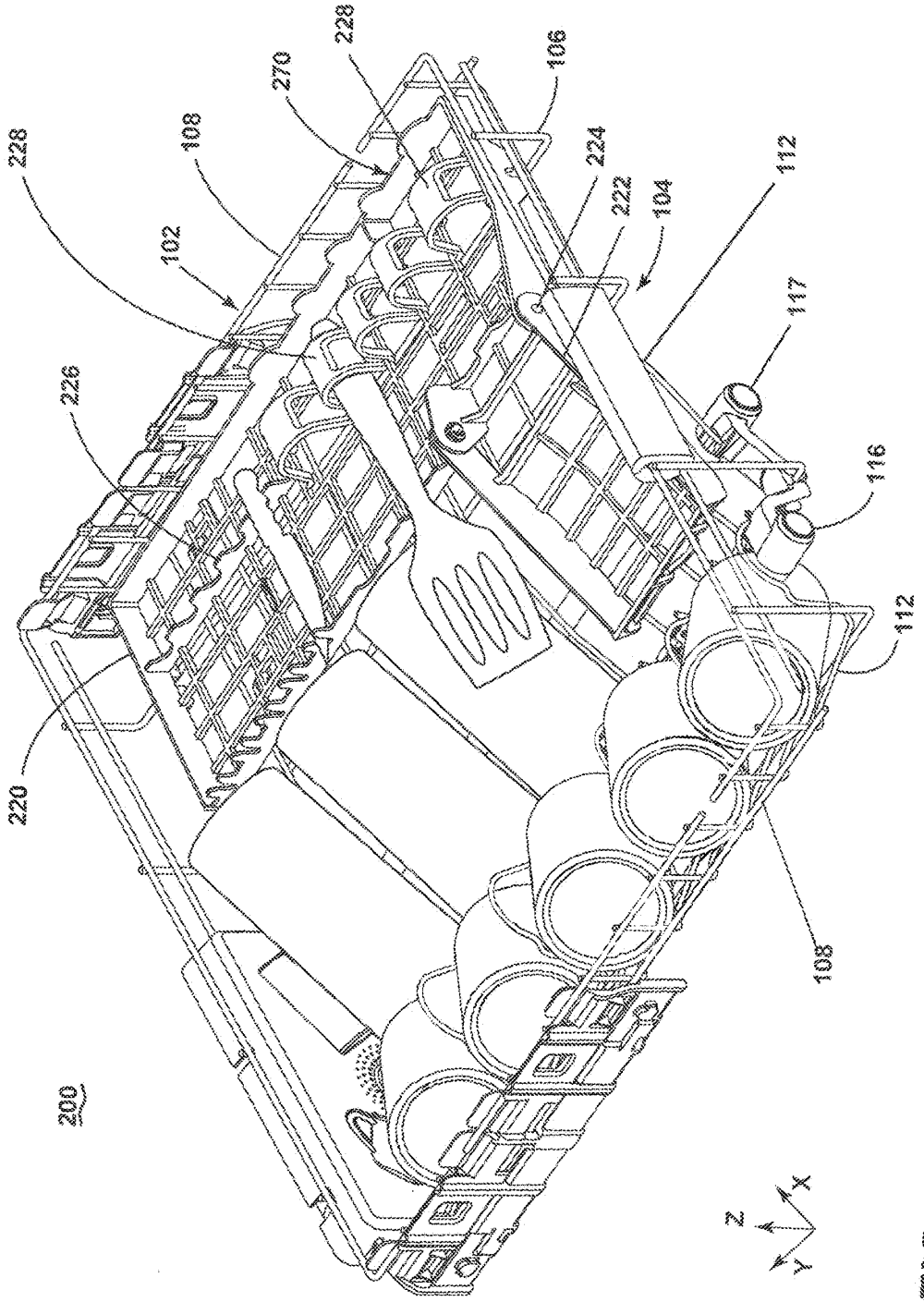
200
220
226
228
102
108
270
228
106
224
222
104
112
117
116
112
108
Z
X
Y

FIG. 7

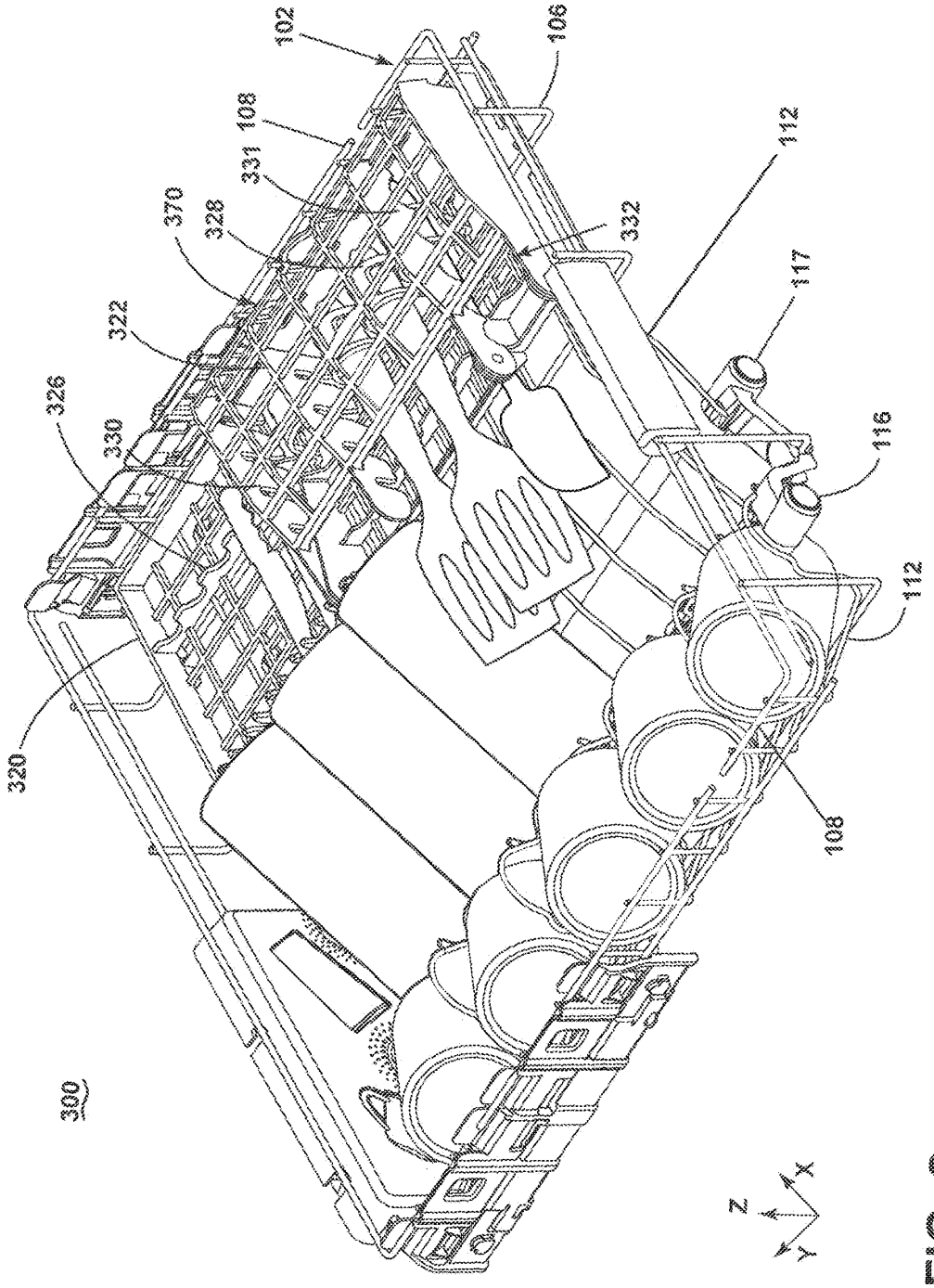
300
320
326
330
322
370
328
331
108
102
106
332
112
117
116
112
108
Z
X
Y

FIG. 8

DISHWASHER WITH A DISH RACK

CROSS-REFERENCE TO RELATED APPLICATIONS

This application is a continuation of U.S. patent application Ser. No. 19/297,954, filed on Aug. 12, 2025, now U.S. Pat. No. 12,543,922, issued Feb. 10, 2026, which is a continuation of U.S. patent application Ser. No. 19/039,228, filed on Jan. 28, 2025, which is a continuation of U.S. patent application Ser. No. 18/535,327, filed on Dec. 11, 2023, now U.S. Pat. No. 12,232,681, issued Feb. 25, 2025, which is a continuation of U.S. patent application Ser. No. 17/830,947, filed on Jun. 2, 2022, now U.S. Pat. No. 11,864,712, issued Jan. 9, 2024, which is a continuation of U.S. patent application Ser. No. 16/833,984, filed Mar. 30, 2020, now U.S. Pat. No. 11,375,874, issued Jul. 5, 2022, all of which are incorporated herein by reference in their entirety.

TECHNICAL FIELD

This disclosure generally relates to a dishwasher, and more specifically to dishwasher including a dish rack.

BACKGROUND

Household dishwashers typically include one or more dish racks for holding various types of dishes in the dishwasher tub. Traditionally, a dishwasher includes an upper dish rack that holds glassware and small dishes, and a lower dish rack that holds larger dishes, such as plates. The upper and lower dish racks usually consume most of the space inside the dishwasher tub. Some dishwashers can also include a third dish rack, often referred to as a third level rack, of a much shorter height the upper and lower dish racks, with the height being such as to only accommodate silverware or other low profile utensils.

A utensil caddy is often used to specifically hold silverware. Utensil caddies are normally removably carried by the lower dish rack or on the inner surface of the door closing the dishwasher. These utensil caddies are oriented such that they hold the utensils in an upright or vertical orientation during washing.

Some dishwashes can have both a utensil caddy and a third level rack. The third level rack can normally accommodate long handle items, such as spatulas, severing spoons, stirring spoons, which, if put into the utensil caddy, would extend far enough vertically to interfere with the rotation of the sprayer below the upper rack.

SUMMARY

According to one aspect of the present disclosure, a dishwasher includes a tub that defines a dish treating chamber. A first lower dish rack and a second lower dish rack are located in the dish treating chamber. An upper dish rack is located above the first lower dish rack and the second lower dish rack in the dish treating chamber. The upper dish rack defines a planar portion on a first side of the upper dish rack and a depression on a second side of the upper dish rack. The depression includes a first angled wall and a second angled wall. The first angled wall defines a first set of cup seats and the second angled wall defines a second set of cup seats. The first set of cups seats is configured to angle an opening of a drinking vessel positioned in the first set of cup seats toward an opening of a drinking vessel positioned in the second set of cup seats. The planar portion is configured to support a plurality of utensil holders configured to horizontally support utensils.

BRIEF DESCRIPTION OF THE DRAWINGS

In the drawings:

FIG. **1** is a schematic, cross-sectional view of a dishwasher with a dish rack according to an aspect of the present disclosure.

FIG. **2** is a schematic diagram of a control system for the dishwasher of FIG. **1**.

FIG. **3** is a side view of a dish rack assembly including the dish rack of FIG. **1** with a utensil caddy according aspects of the disclosure.

FIG. **4** is a perspective view of the utensil caddy of FIG. **3** in a first position according to aspects of the disclosure.

FIG. **5**A is a perspective view of the utensil caddy of FIG. **3** in a second position according to aspects of the disclosure.

FIG. **5**B is a perspective view of the utensil caddy in the second position of FIG. **5***a* according to aspects of the disclosure.

FIG. **6** is a perspective view of the utensil caddy in the second position of FIG. **5** including utensils according to aspects of the disclosure

FIG. **7** is a perspective view of the dish rack including an exemplary utensil caddy of FIG. **3** which extends across a quarter of the dish rack assembly according to aspects of the disclosure.

FIG. **8** is a perspective view of the dish rack including an exemplary utensil caddy of FIG. **3** which extends across half of the dish rack assembly according to aspects of the disclosure.

DESCRIPTION OF EMBODIMENTS OF THE INVENTION

Aspects of the present disclosure relate to a utensil caddy including on a dish rack of dishwasher, specifically an automatic dishwasher. The utensil caddy can be configured to include, at least, a first side wall including a first set of utensil holders and a second side wall including a second set of utensil holders. The second side wall can be further configured to be moveable relative to the utensil caddy between a first position and a second position.

FIG. **1** illustrates a schematic, cross-sectional view of an exemplary dishwasher **10**, specifically an automatic dishwasher, according to an embodiment of the present disclosure. The dishwasher **10** shares many features of a conventional automatic dishwasher, which will not be described in detail herein except as necessary for a complete understanding of the disclosure. While the present disclosure is described in terms of a conventional dishwashing unit, it can also be implemented in other types of dishwashing units, such, but not limited to, as in-sink dishwashers, multi-tub dishwashers, or drawer-type dishwashers. A chassis **12** can define an interior of the dishwasher **10** and can include a frame, with or without panels mounted to the frame. For built-in dishwashers, outer panels are typically not needed. For dishwashers that are not built into existing cabinetry, the chassis **12** can include the panels mounted to the frame to form a cabinet for the dishwasher **10**. An open-faced tub **14** can be provided within the interior of and mounted to the chassis **12** and can at least partially define a treating chamber **16** or a dish treating chamber for washing or otherwise treating dishes. The open face of the tub **14** defines an access opening for the treating chamber **16**.

A closure element, such as a door assembly **18**, can be movably mounted to the dishwasher **10** for movement between opened and closed positions. The door assembly **18** can be configured selectively open and close the treating chamber access opening defined by the open face of the tub **14**. Thus, the door assembly **18** provides accessibility to the treating chamber **16** for the loading and unloading of dishes or other washable items. It should be appreciated that the door assembly **18** can be secured to the lower front edge of the chassis **12** or to the lower front edge of the tub **14** via a hinge assembly (not shown) configured to pivot the door assembly **18**. When the door assembly **18** is closed, user access to the treating chamber **16** can be prevented, whereas user access to the treating chamber **16** can be permitted when the door assembly **18** is open. Alternatively, the closure element can be slidable relative to the chassis **12**, such as in a drawer-type dishwasher, wherein the access opening for the treating chamber **16** is formed by an open-top tub. Other configurations of the closure element relative to the chassis **12** and the tub **14** are also within the scope of the disclosure.

Dish holders, illustrated in the form of an upper dish rack **22**, a lower dish rack **24**, and a third level rack **20**, can be located within the treating chamber **16** and receive dishes for treatment, such as washing. The third level, upper, and lower dish racks **20**, **22**, **24** can be vertically oriented with respect to one another. That is, third level, upper, and lower dish racks **20**, **22**, **24** can be spaced from one another in a vertical direction denoted by a Z-axis. The third level, upper, and lower dish racks **20**, **22**, **24** are typically mounted for slidable movement in and out of the treating chamber **16** for ease of loading and unloading. Other dish holders can be provided, such as a silverware basket, separate from or combined with third level, upper, and lower dish racks **20**, **22**, **24**. As used in this description, the term "dish(es)" is intended to be generic to any item, single or plural, that may be treated in the dishwasher **10**, including, without limitation, dishes, plates, pots, bowls, pans, glassware, and silverware. While the dishwasher **10** is illustrated herein as having three dish racks **20**, **22**, **24**, it will be understood that any suitable number and configuration of dish racks is also within the scope of the disclosure.

A utensil caddy **70** can be included with the third level rack **20**. Specifically, the utensil caddy **70** can be provided on a lateral side of third level dish rack **20**. As used herein, the term lateral can denote any direction corresponding to the X-axis. The utensil caddy **70** can be configured to hold a set of utensils so they can be treated within the treating chamber **16**. As used herein, the term utensil can refer to any implement, article or container suitable for treatment within the treating chamber **16**. For example, the set of utensils can include, but is not limited to, a spoon, a fork, a spork, a knife, a spatula, a baby-bottle nipple, a measuring spoon, a ladle, a tong, or the like. It will be appreciated that there can be any number of one or more utensil caddy's **70** within the treating chamber **16** and included with any of the third level, upper, and lower dish racks **20**, **22**, **24**.

A spray system can be provided for spraying liquid in the treating chamber **16** and may be provided in the form of, for example, an upper spray assembly **26**, a middle spray assembly **28**, and a lower spray assembly **30**. The upper spray assembly **26**, the middle spray assembly **28**, and the lower spray assembly **30** are located, respectively, above the third level dish rack **20**, beneath the upper dish rack **22**, and beneath the lower dish rack **24** and are illustrated as rotating spray arms by example but are not limited to such positions and sprayer type. The spray system can further include a rack spray assembly **32** coupled to the third level dish rack **20**; the rack spray assembly **32** will be discussed in further detail below. Furthermore, the spray system can include additional and/or alternative spray assemblies. For example, a distribution header or spray manifold can be located at the rear of the tub **14** at any vertical position. An exemplary spray manifold is set forth in detail in U.S. Pat. No. 7,594,513, issued Sep. 29, 2009, and titled "Multiple Wash Zone Dishwasher," which is incorporated herein by reference in its entirety.

A recirculation system can be provided for recirculating liquid from the treating chamber **16** to the spray system. The recirculation system can include a sump **34** and a pump assembly **36**. The sump **34** collects the liquid sprayed in the treating chamber **16** and can be formed by a sloped or recess portion of a bottom wall of the tub **14**. The pump assembly **36** can include both a drain pump **38** and a recirculation pump **40**. The drain pump **38** can draw liquid from the sump **34** and pump the liquid out of the dishwasher **10** to a household drain line (not shown). The recirculation pump **40** can draw liquid from the sump **34**, and the liquid can be simultaneously or selectively pumped through a supply conduit or tube **42** to each of the upper, middle, lower, and rack spray assemblies **26**, **28**, **30**, **32** for selective spraying. The liquid supply tube **42** extends along a wall of the tub **14** and fluidly connect the pump assembly **36** to the upper, middle, lower, and rack spray assemblies **26**, **28**, **30**, **32**. While not shown, a liquid supply system can include a water supply conduit coupled with a household water supply for supplying water to the treating chamber **16**.

While the pump assembly **36** is illustrated herein as having separate drain and recirculation pumps **38**, **40**, in an alternative embodiment, the pump assembly **36** can include a single pump configured to selectively supply wash liquid to either the spray system or the drain line, such as by configuring the pump to rotate in opposite directions, or by providing a suitable valve system.

A heating system including a heater **44** can be located, for example, within the sump **34** for heating the liquid contained in the sump **34**. The heater **44** can also heat air contained in the treating chamber **16**. Alternatively, a separate heating element (not shown) can be provided for heating the air circulated through the treating chamber **16**. A filtering system (not shown) can be fluidly coupled with the recirculation flow path for filtering the recirculated liquid.

A control system including a controller **46** can also be included in the dishwasher **10**, which can be operably coupled with various components of the dishwasher **10** to implement a cycle of operation. The controller **46** can be located within the door assembly **18** as illustrated, or it can alternatively be located somewhere within the chassis **12**. The controller **46** can also be operably coupled with a control panel or user interface **48** for receiving user-selected inputs and communicating information to the user. The user interface **48** can include operational controls such as dials, lights, switches, and displays enabling a user to input commands, such as a cycle of operation, to the controller **46** and receive information.

FIG. **2** is a schematic illustration of the controller **46** of FIG. **1**. The controller **46** can be coupled with the heater **44** for heating the wash liquid during a cycle of operation, the drain pump **38** for draining liquid from the treating chamber **16**, and the recirculation pump **40** for recirculating the wash liquid during the cycle of operation. The controller **46** can be provided with a memory **50** and a central processing unit (CPU) **52**. The memory **50** can be used for storing control software that can be executed by the CPU **52** in completing

an automatic cycle of operation using the dishwasher **10** and any additional software. For example, the memory **50** can store one or more pre-programmed cycles of operation that can be selected by a user and completed by the dishwasher **10**. A cycle of operation for the dishwasher **10** can include one or more of the following steps: a wash step, a rinse step, and a drying step. The wash step can further include a pre-wash step and a main wash step. The rinse step can also include multiple steps such as one or more additional rinsing steps performed in addition to a first rinsing. The amounts of water and/or rinse aid used during each of the multiple rinse steps can be varied. The drying step can have a non-heated drying step (so called "air only"), a heated drying step or a combination thereof. These multiple steps can also be performed by the dishwasher **10** in any desired combination.

The controller **46** can also receive input from one or more sensors **54**. Non-limiting examples of sensors that can be communicably coupled with the controller **46** include a temperature sensor and turbidity sensor to determine the soil load associated with a selected grouping of dishes, such as the dishes associated with a particular area of the treating chamber **16**.

The dishwasher **10** can include all of the above exemplary systems, a selection of the above exemplary systems, and/or other systems not listed above as desired. Further, some of the systems can be combined with other systems and/or can share components with other systems. Examples of other systems that the dishwasher can further include are a dispensing system that supplies one or more treating agents or chemistries to the treating chamber **16** and an air supply system that can provide air, which can be heated or not heated, to the treating chamber **16**, such as for drying and/or cooling the dishes. An exemplary air supply system is set forth in U.S. patent application Ser. No. 12/959,673, filed Dec. 3, 2010 and published as U.S. Patent Application Publication No. 2012/0138106 on Jun. 7, 2012, both of which are incorporated herein by reference in their entireties.

FIG. **3** illustrates a side view of a dish rack assembly **100** including the utensil caddy **70** of FIG. **1** and a dish rack **102**. It will be appreciated that the dish rack assembly **100** can include any dish rack **102** as described herein. For example, the dish rack **102** can be any of the upper or lower dish racks **22**, **24**, or the third level rack **20**.

The dish rack **102** has a wire frame construction forming a bottom wall **104** from which extends a peripheral wall **108** defining the sides of the dishrack. The bottom wall **104** and peripheral wall **108** define an interior where utensils and the like can be placed for washing.

While the bottom wall **104** can have any shape, including planar, the bottom wall **104** is illustrated as having a planar portion **106** and a depression defined by a first and second angled wall **110**, **112**. The depression, as illustrated, forms a first set of cup seats **114** and a second set of cup seats **115**, which hold cups as illustrated.

The bottom wall **104** can define multiple planes. For example, the planar portion **106** can define a first plane transverse to the X-axis, while the first angled wall **110** can define a second plane and the second angled wall **112** can define a third plane. The second and the third planes can both be angled with respect to the X-axis such that they intersect with the first plane. Specifically, the second plane can intersect the first plan at the point where the planar portion **106** and the first angled wall **110** meet.

A spray assembly is carried by the dish rack **102** and includes first and second sprayers **116**, **117**, with the first sprayer **116** located between the first and second set of cup seats **114**, **115** to emit a spray into the open top of the cups, and the second sprayer **117** located to emit a spray into the planar portion **106**.

The utensil caddy **70** can be received within a region of the dish rack **102** adjacent to a portion of the bottom wall **104**, specifically the planar portion **106**. It is contemplated that the utensil caddy **70** can be removably mounted to a portion of the dish rack **102**, specifically the planar portion **106**. As such, the utensil caddy **70** can be moved to other portions of the dish rack **102** or to another dish rack **102** altogether. Alternatively, at least a portion of the utensil caddy **70** can be integrally formed with the planar portion **106** and hence the dish rack **102**. It is further contemplated that the utensil caddy **70** can be laid on its side or otherwise be defend as a horizontal utensil caddy such that utensils can be received within the utensil caddy **70** in a horizontal fashion transverse to the X-axis. Traditional utensil caddies, on the other hand, are vertically mounted such that they can be defined as a vertical utensil caddy. As such, utensils can be received within the vertical utensil caddy in a vertical fashion transverse to the Z-axis.

FIG. **4** is a perspective view of the dish rack assembly **100** of FIG. **3** including the utensil caddy **70** in a first position. As used herein, the first position can be defined as a closed configuration of the utensil caddy **70** where at least a portion of the utensil caddy **70** abuts a portion of the bottom wall **104** and does not abut the first angled wall **110**. As illustrated, the first and second set of cup seats **114**, **115**, the first and second sprayers **116**, **117**, and the utensil caddy **70** can extend along the entirety of the dish rack **102** along the Z-axis.

The utensil caddy **70** can include a periphery defining an interior with an open top **132**. The open top **132** can be defined as a portion of the utensil caddy **70** in which utensils can be passed through. The open top **132** can lie at a junction point between the first plane of the planar portion **106** and the second plane of the first angled wall **110**.

FIG. **5**A is a perspective view of the dish rack assembly **100** of FIG. **3** including the utensil caddy **70** in a second position. The second position can be defined as an open configuration of the utensil caddy **70** where at least a portion of the utensil caddy **70** is carried by, received on, or abuts a portion of the bottom wall **104**, specifically the first angled portion **112** as illustrated. It will be appreciated that the utensil caddy **70** can be advantageously shaped so that a portion of the utensil caddy **70** can transition from the closed or first position to the opened or second position and conform with the first angled wall **110**.

FIG. **5**B is a perspective view of the utensil caddy **70** in the second position of FIG. **5**A without the dish rack **102**. The utensil caddy **70** can include a first side wall **120**, a second side wall **122**, and a set of hinges **124**.

The first side wall **120** can rest on, be directly coupled to, or form a portion of the bottom wall **104** of the dish rack **102**, specifically, the planar portion **106**. The first side wall **120** can include a first set of utensil holders illustrated as a set of utensil seats **126** or loops **128**. The utensil holders can be configured to retain or hold a set of utensils such as, but not limited to, spoons, forks, sporks, knives, ladles, spatulas, or the like. Specifically, the set of utensil seats **126** can be configured to hold smaller utensils (e.g., spoons, forks, sporks, etc.) while the loops **128** can be configured to hold larger utensils (e.g., spatulas, ladles, whisks, etc.). Although illustrated as four separate loops **128** and four sets of utensil seats **126**, it will be appreciated that there can be any number of loops **128** or utensil seats **126** provided on the first side wall **120**. It will be further appreciated, that one or more of

the sets of utensils seats **126** can be provided between adjacent loops **128** as illustrated.

The second side wall **122** can be configured to rotate along the Y-axis about the set of hinges **124** and with respect to the first side wall **120**. As such, the second side wall **122** can be moveable between the first position where at least a portion of the second side wall **122** abuts the first side wall **120**, and the second position where at least a portion of the second side wall **122** rests against or abuts the bottom wall **104**, specifically against the first angled portion **112**. As illustrated, the second side wall **122** can overlie the entire first set of cup seats **114** and not overlie the second set of cup seats **115** when in the second position.

The second side wall **122** can further include a second set of utensil holders illustrated as a pin **130** and a seat **131**. The pin **130** can be formed as a triangular projection extending from a surface while the seat **131** can be formed as a curved projection of the second side wall **122**. A space or slot can be included between adjacent pins **130**. As such, the slot can be configured to accept the blade of a knife while the seat **131** accept the handle of the knife, as illustrated. Additionally, or alternatively, the utensil holders of the second side wall **122** can be configured to hold the any suitable utensils such as, but not limited to, a spatula, a ladle, or the like.

The first side wall **120** and the second side wall **122** can be coupled together through the set of hinges **124**, specifically two hinges **124** provided on either distal end of the utensil caddy **70** along the Y-Axis. The set of hinges **124** can act as a method of coupling or a point of connection between first side wall **120** and the second side wall **122** and also provide for rotational movement about the Y-Axis for the second side wall **122** with respect to the first side wall **120**. As such, the second side wall **122** can pivot from the first position to the second position.

FIG. **6** is a perspective view of the dish rack assembly **100** of FIG. **3** in the first position and including various sets of utensils received within the utensil caddy **70** in the first position. As illustrated, a set of cups is received within the first set of cup seats **114**, and a set of mugs is received within the second set of cup seats **115**. Further, a set of utensils are received within the utensil caddy **70**, specifically, a set of knives, forks, and spoons are received within the set of utensil seats **126** and a set of larger knives are received within the second utensil holders, specifically the pins **130** and the seats **131**. It will be appreciated, however, that other such as sporks, measuring cups, or the like can be received within the utensil seats **126** and larger utensils such as spatulas, ladles, or the like can be received within the loops **128**. It will be further appreciated that although illustrated as cups and mugs either the first or the second set of cup seats **114**, **115** can receive other objects to be treated within the treating chamber **16** such as, but not limited to, baby bottles, plates, bowls, pans, or the like.

A diffuser section can be included within a portion of the utensil caddy **70**, specifically a portion of the second side wall **122**. The diffuser section can be defined as a portion of the utensil caddy **70** which directly contacts a stream of water from one or more of the first and second sprayers **116**, **117**. The stream of water emitted from the first and second sprayers **116**, **117** can, in some instances, be defined as a straight-line stream of water. This straight-line stream of water can be used to effectively clean targeted portions of various utensils, cups, mugs, or plates within the treating chamber **16**. It is contemplated, however, that placing a portion of the utensil caddy **70**, specifically the diffuser section on the second side wall **122**, in the path of the stream of water can diffuse the stream of water outward to form a fan pattern covering a larger area than the straight-line stream can be more effective at cleaning various utensils. For example, if it is desired to clean a spatula or other utensils with a large surface area, at least a portion of the stream of water from the first and second sprayers **116**, **117** that is directed toward the spatula can impact the diffuser region of the utensil caddy **70**. Once the stream of water hits the diffuser section, the stream of water can fan-out or form a cone-shaped spray area which can cover a larger surface area than the straight-line stream of water. This, in turn, can be more effective in cleaning utensils on the utensil caddy **70** which have a large surface area than through the use of non-diffused, straight-line stream of water.

In operation, the first and second sprayers **116**, **117** or any other sprayer within the treating chamber **16** (e.g., upper, lower, or middle spray assemblies **26**, **28**, **30**) can be configured to treat a set of utensils within a spray zone created by the sprayers. As used herein, the term spray zone can be defined as a region or section within the treating chamber which receives a direct or indirect flow of treating fluid. As such, utensils, cups, plates, or the like, placed within the spray zone will be washed or treated. The utensil caddy **70** can be placed in either the first or second position depending on the utensils which need to be treated. For example, if it is desired to clean a set of mugs and a set of cups, the utensil caddy **70** can be positioned in the first position such that cups and mugs can be placed within the first and second sets of cup seats **114**, **115** as illustrated in FIG. **6**. On the other hand, if it is desired to clean a set of utensils, the utensil caddy **70** can be positioned in the second position and a set of utensils can be placed within the respective utensil holders or seats, as illustrated in FIG. **6**. It is further contemplated that when the utensil caddy **70** is positioned in the second position that only the first set of cup seats **114** are covered by the second side wall **122**. As such, cups or mugs can still be received within the second set of cup seats **115**.

FIG. **7** is a perspective view of a dish rack assembly **200**. The dish rack assembly **200** is similar to the dish rack assembly **100**; therefore, like parts will be identified by like numerals in the **200** series, with it being understood that the description of the like parts of the dish rack assembly **100** applies to the dish rack assembly **200** unless otherwise noted.

The dish rack assembly **200** includes a utensil caddy **270** which includes a second side wall **222** similar to the second side wall **122** except the overall length along the Y-axis of the second side wall **222** is smaller than the overall length of a first side wall **220** along the Y-axis. Specifically, the second side wall **222** is configured to have an overall length that is a quarter of the overall length of the first side wall **220**. As such, when the utensil caddy **270** is in the second position as illustrated, an uncovered portion or an opening is formed within the first set of cup seats **114**. This, in turn, ensures that at least a portion of the first set of cup seats **114** are free or open regardless of whether the utensil caddy **270** is in the first position or the second position.

The second side wall **222** can be configured to hold smaller, more delicate utensils than the second side wall **122**. For example, the second side wall **222** can be configured to hold baby bottle nipples, caps, burrs, or the like. Additionally, or alternatively, the second side wall **222** can include a utensil holder similar to a utensil loop **228** or a utensil seat **226** to hold a set of utensils.

FIG. **9** is a perspective view of a dish rack assembly **300**. The dish rack assembly **300** is similar to the dish rack assembly **100**, **200**; therefore, like parts will be identified by

like numerals in the **300** series, with it being understood that the description of the like parts of the dish rack assembly **100**, **200** applies to the dish rack assembly **300** unless otherwise noted.

The dish rack assembly **300** includes a utensil caddy **370** which includes a second side wall **322** similar to the second side wall **122**, **222** except that the second side wall **322** includes an overall length along the Y-axis that is half the overall length of a first side wall **320** along the Y-axis. This is similar to the second side wall **222** in that a portion of the first set of cup seats **114** are free or open regardless of whether the utensil caddy **370** is in the first position or the second position. However, the second side wall **322** includes the overall length of half the overall length of the first side wall **320**. This, in turn, allows for larger utensils, such as large knives, to be mounted on the second side wall **322** when the utensil caddy **370** is in the second position while still allowing for at least a portion of the first set of cup seats **114** to be open regardless of the position of the utensil caddy **370**.

A set of loops **328** can be provided on the first side wall **320** such that a set of larger utensils, illustrated as three spatulas, can be secured within the utensil caddy **370**. It is contemplated, that a set of larger utensils can be secured by the set of loops **328** regardless of whether the utensil caddy **370** is in the first position or the second position. As illustrated, the utensil caddy **370** is in the first position such that a portion of the larger utensils extend beyond the utensil caddy along the X-axis.

Benefits of the present disclosure include a dish rack assembly which is more versatile when compared to traditional dish rack assemblies. For example, traditional dish rack assemblies can include a vertical utensil caddy in a fixed position on the dish rack and a set of cup seats. Utensils can be secured within the utensil caddy while cups and mugs can be provided within the cup seats. The set of cup seats, however, are not configured to receive a set of utensils, so in cases where it is desired to treat a large amount of utensils there may not be adequate space to secure the utensils. The utensil caddy as disclosed herein, however, can be further as a horizontal utensil caddy in that utensils can be horizontally placed within the utensil caddy through the open top when the utensil caddy is in the first position and be laid horizontally across either the first or second side walls when the utensil caddy is in the second position. This allows for a more versatile dish rack assembly as the utensil caddy can be in either the first position or the second position depending on the utensils which are desired to be treated. For example, if a large amount of cups or mugs are desired to be treated, the utensil caddy can be positioned in the first position such that all the cup seats are opened. If, on the other hand, it is desired to treat a large amount of utensils, the utensil caddy can be positioned in the second position and allow for a larger amount of utensils to be secured by the first and second side walls.

Further benefits of this disclosure include the dish rack assembly, specifically the utensil caddy, with an improved washing efficiency of utensils when compared to traditional vertical utensil caddies. For example, in traditional vertical utensil caddies receive or secure the utensils in a vertical fashion. This, in turn, can place portions of the utensils out of the spray zone such that they are not as effectively cleaned. The utensil caddy as described herein, however, ensures that all of the utensils are horizontally secured and that all portions of the utensils which need to be treated are within the spray zone. Further, the utensil caddy can include a diffuser section which can diffuse the streams of water from the sprayers and effectively cover a larger surface area for the treating fluid or water to reach. As such, the washing efficiency of the utensils placed or secured within the utensil caddy can be improved when compared to the traditional vertical utensil caddies.

It will also be understood that various changes and/or modifications can be made without departing from the spirit of the present disclosure. By way of non-limiting example, although the present disclosure is described for use with a wire dish rack, it will be recognized that the rack height adjustment assembly can be employed with various rack constructions, including molded racks, such as racks molded of plastic.

To the extent not already described, the different features and structures of the various embodiments may be used in combination with each other as desired. That one feature may not be illustrated in all of the embodiments is not meant to be construed that it cannot be, but is done for brevity of description. Thus, the various features of the different embodiments may be mixed and matched as desired to form new embodiments, whether or not the new embodiments are expressly described. All combinations or permutations of features described herein are covered by this disclosure.

While the invention has been specifically described in connection with certain specific embodiments thereof, it is to be understood that this is by way of illustration and not of limitation. Reasonable variation and modification are possible within the scope of the forgoing disclosure and drawings without departing from the spirit of the invention which is defined in the appended claims.

It is intended that the following concepts can define at least a portion of the scope of the disclosure and that the apparatus and/or method(s) within the scope of these concepts and their equivalents be covered thereby. This disclosure should be understood to include all novel and non-obvious combinations of elements described herein, and the concepts may be presented in this or a later application to any novel and non-obvious combination of these elements. Any aspect of any embodiment can be combined with any aspect of any other embodiments. Moreover, the foregoing embodiments are illustrative, and no single feature or element is essential to all possible combinations that may be included in this or a later application. Further aspects of the invention are provided by the subject matter of the following clauses:

An automatic dishwasher configured to implement an automatic treating cycle of operation, comprising a tub defining a dish treating chamber, a dish rack located within the dish treating chamber and comprising a bottom wall defining a first cup seat and a second cup seat, a first sprayer, carried by the dish rack, and emitting a spray into the first cup seat and a second sprayer, carried by the dish rack, and emitting a spray into the second cup seat.

The automatic dishwasher of the preceding clause wherein at least one of the first and second cup seats is defined by a depression.

The automatic dishwasher of any of the preceding clauses wherein the bottom wall further comprises a substantially planar portion extending across a first portion of the bottom wall and the depression extends across a second portion of the bottom wall.

The automatic dishwasher of any of the preceding clauses wherein the first substantially planar portion defines a utensil seat.

The automatic dishwasher of any of the preceding clauses wherein the dish rack is an upper dishrack and located within a top portion of the dish treating chamber.

The automatic dishwasher of any of the preceding clauses wherein the depression is defined by a second and a third planar portion angled with respect to the first planar portion.

The automatic dishwasher of any of the preceding clauses wherein the second planar portion defines the first cup seat and the third planar portion defines the second cup seat.

The automatic dishwasher of any of the preceding clauses further comprising a utensil caddy, removably mounted to the dish rack, and comprising a periphery defining an interior with an open top, the periphery having at least first and second opposing side walls, the first side wall abutting and laying parallel to the bottom wall, and the second side wall movable relative to the utensil caddy between a first position, in opposition to the first side wall, and a second position, abutting the bottom wall.

The automatic dishwasher of any of the preceding clauses further comprising a first set of utensil holders provided on the first side wall comprising loops extending from the first side wall and a second set of utensil holders provided on the second side wall comprising pairs of spaced pins defining a slot to receive at least one of a blade or handle of a utensil.

The automatic dishwasher of any of the preceding clauses wherein the first set of utensil holders is different from the second set of utensil holders.

The automatic dishwasher of any of the preceding clauses wherein the second set of utensil holders is only operationally functional when the second side wall is in the second position.

The automatic dishwasher of any of the preceding clauses wherein the first set of utensil holders is nested within the second set of utensil holders when the second side wall is in the first position.

The automatic dishwasher of any of the preceding clauses wherein the first sprayer is a dedicated sprayer emitting spray into the first cup seat.

A dishrack for a dishwasher comprising a bottom wall defining a first cup seat and a second cup seat, a first sprayer, carried by the dish rack, and emitting a spray into the first cup seat and a second sprayer, carried by the dish rack, and emitting a spray into the second cup seat.

The dishrack of the preceding clause wherein at least one of the first and second cup seats is defined by a depression.

The dishrack of any of the preceding clauses wherein the bottom wall further comprises a substantially planar portion extending across a first portion of the bottom wall and the depression extends across a second portion of the bottom wall.

The dishrack of any of the preceding clauses wherein the first substantially planar portion defines a utensil seat.

The dishrack of any of the preceding clauses wherein the dish rack is an upper dishrack and located within a top portion of the dish treating chamber.

The automatic dishwasher of any of the preceding clauses wherein the depression is defined by a second and a third planar portion angled with respect to the first planar portion.

The automatic dishwasher of any of the preceding clauses wherein the second planar portion defines the first cup seat and the third planar portion defines the second cup seat.

What is claimed is:

1. A dishwasher, comprising:

a tub defining a dish treating chamber;

a first lower dish rack and a second lower dish rack located in the dish treating chamber; and

an upper dish rack having a wire frame forming a bottom wall from which extends a peripheral wall defining sides of the upper dish rack, the upper dish rack located above the first lower dish rack and the second lower dish rack in the dish treating chamber, the bottom wall defining a planar portion on a first side of the upper dish rack and a depression on a second side of the upper dish rack, wherein the depression includes a first angled wall and a second angled wall;

wherein the first angled wall is configured to support a first drinking vessel on its cylindrical edge and at a first angle, and wherein the second angled wall is configured to support a second drinking vessel on its cylindrical edge and at a second angle such that an opening of the first drinking vessel is angled toward an opening of the second drinking vessel; and

wherein the first angled wall is located between the second angled wall and the planar portion.

2. The dishwasher of claim **1**, wherein the planar portion includes a plurality of utensil holders operably coupled to the bottom wall.

3. The dishwasher of claim **2**, wherein the plurality of utensil holders is disposed in a utensil caddy removably coupled to the bottom wall.

4. The dishwasher of claim **3**, wherein the utensil caddy includes a first side wall, a second side wall, and a set of hinges.

5. The dishwasher of claim **4**, wherein the first side wall and the second side wall of the utensil caddy are coupled together through the set of hinges.

6. The dishwasher of claim **3**, further comprising:

at least one sprayer adjacent to the first angled wall and configured to emit a spray of water into the first drinking vessel.

7. The dishwasher of claim **6**, wherein the at least one sprayer is located between the first angled wall and the second angled wall.

8. The dishwasher of claim **6**, wherein the at least one sprayer extends from a front of the upper dish rack to a back of the upper dish rack.

9. The dishwasher of claim **6**, wherein the at least one sprayer is also configured to emit the spray of water into the second drinking vessel.

10. The dishwasher of claim **6**, wherein the at least one sprayer is configured to provide a straight-line stream of water.

11. The dishwasher of claim **6**, wherein the at least one sprayer includes a plurality of spray nozzles, and wherein each of the spray nozzles is configured to rotate as the at least one sprayer emits the spray of water into the first drinking vessel.

12. The dishwasher of claim **6**, wherein the utensil caddy includes a diffuser that diffuses the spray of water emitted by the at least one sprayer.

13. The dishwasher of claim **6**, wherein the at least one sprayer is configured to emit a straight-line steam of water to the planar portion of the upper dish rack.

14. The dishwasher of claim **6**, wherein the at least one sprayer is configured to emit a fan pattern of water.

15. The dishwasher of claim **6**, wherein the at least one sprayer is located between the first angled wall and the second angled wall, the at least one sprayer configured to emit the spray of water into the first and second drinking vessels.

16. The dishwasher of claim **6**, wherein a portion of the spray of water emitted by the at least one sprayer is directed toward the plurality of utensil holders.

17. The dishwasher of claim **6**, wherein the plurality of utensil holders is integrally formed with the wire frame.

18. The dishwasher of claim **17**, wherein the wire frame construction also forms the planar portion and side walls of the upper dish rack.

19. The dishwasher of claim **17**, wherein a plurality of spray nozzles of the at least one sprayer are located beneath the wire frame.

20. The dishwasher of claim **19**, wherein the plurality of spray nozzles are configured to rotate during operation of said dishwasher.

21. The dishwasher of claim **19**, wherein the wire frame includes a raised section disposed between the first angled wall and the second angled wall.

22. The dishwasher of claim **21**, wherein the plurality of spray nozzles are disposed below a portion of the raised section.

23. The dishwasher of claim **22**, wherein the plurality of spray nozzles are disposed below the planar portion.

24. The dishwasher of claim **6**, wherein a lowermost portion of the first angled wall and a lowermost portion of the second angled wall is disposed below the at least one sprayer.

25. The dishwasher of claim **6**, wherein the at least one sprayer is disposed below the planar portion.

26. The dishwasher of claim **1**, wherein the first angled wall is configured to support a set of cups and the second angled wall is configured to support a set of mugs.

27. The dishwasher of claim **1**, wherein the first angled wall at least partially defines a first set of cup seats and the second angled wall at least partially defines a second set of cup seats.

* * * * *