US007967111B2

(12) **United States Patent**
Meyers et al.

(10) **Patent No.: US 7,967,111 B2**
(45) **Date of Patent: Jun. 28, 2011**

(54) **STEPLADDER**

(75) Inventors: **Thomas J. Meyers**, Greenwood, IN (US); **Wyatt Compton**, Garretson, SD (US); **Paul T. Zink**, Indianapolis, IN (US)

(73) Assignee: **Cosco Management, Inc.**, Wilmington, DE (US)

(*) Notice: Subject to any disclaimer, the term of this patent is extended or adjusted under 35 U.S.C. 154(b) by 578 days.

(21) Appl. No.: **11/956,787**

(22) Filed: **Dec. 14, 2007**

(65) **Prior Publication Data**

US 2008/0142301 A1 Jun. 19, 2008

Related U.S. Application Data

(60) Provisional application No. 60/870,464, filed on Dec. 18, 2006.

(51) **Int. Cl.**
E06C 7/00 (2006.01)

(52) **U.S. Cl.** **182/129**; 182/165; 182/161; 182/180.1

(58) **Field of Classification Search** 182/129, 182/165, 161, 180.1, 33, 115; 297/162, 173, 297/41; 312/322; 280/163
See application file for complete search history.

(56) **References Cited**

U.S. PATENT DOCUMENTS

0,162,075	A	4/1875	Isaacs et al.	
5,531,159	A	7/1996	Stubblefield	108/102
5,722,507	A	3/1998	Kain	
5,903,380	A	5/1999	Motamedi et al.	
6,039,149	A	3/2000	Bedja et al.	182/20
6,427,805	B1	8/2002	Gibson et al.	182/165
6,550,579	B2	4/2003	Gibson et al.	
6,902,034	B2	6/2005	Gibson et al.	182/129
7,108,103	B2	9/2006	Meeker	182/165
7,128,187	B2	10/2006	Simpson	182/129
7,182,176	B2	2/2007	Gibson et al.	182/129
2003/0057022	A1	3/2003	Leng	182/165
2003/0209387	A1	11/2003	Burr	182/129

Primary Examiner — Katherine Mitchell
Assistant Examiner — Daniel Cahn
(74) *Attorney, Agent, or Firm* — Barnes & Thornburg LLP

(57) **ABSTRACT**

A stepladder includes a step frame having legs and steps and a tray unit coupled to the step frame. The tray unit includes a utility tray mounted for pivotable movement relative to the step frame.

19 Claims, 6 Drawing Sheets

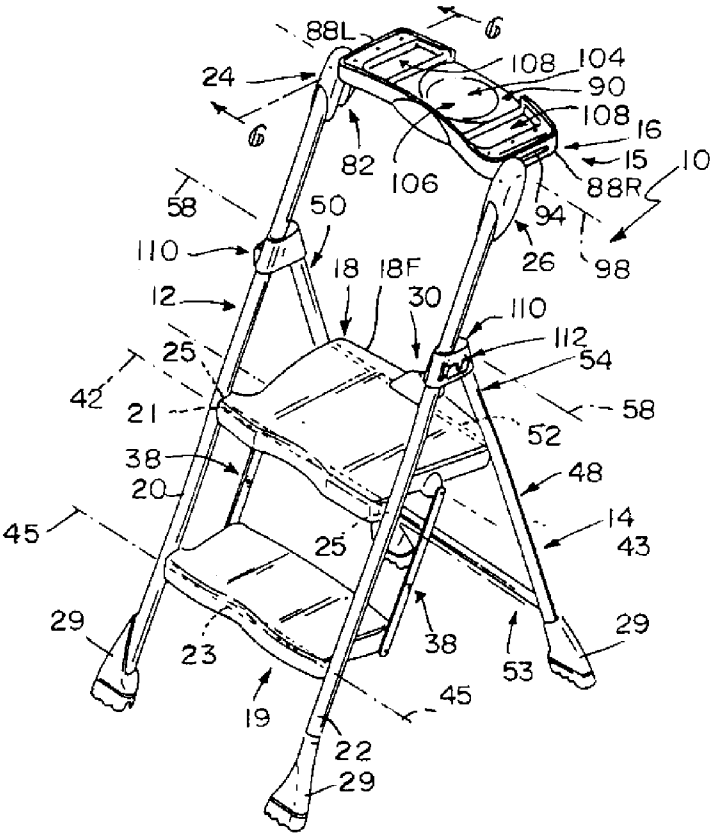

PGR2026-00044
TRICAM EX1007

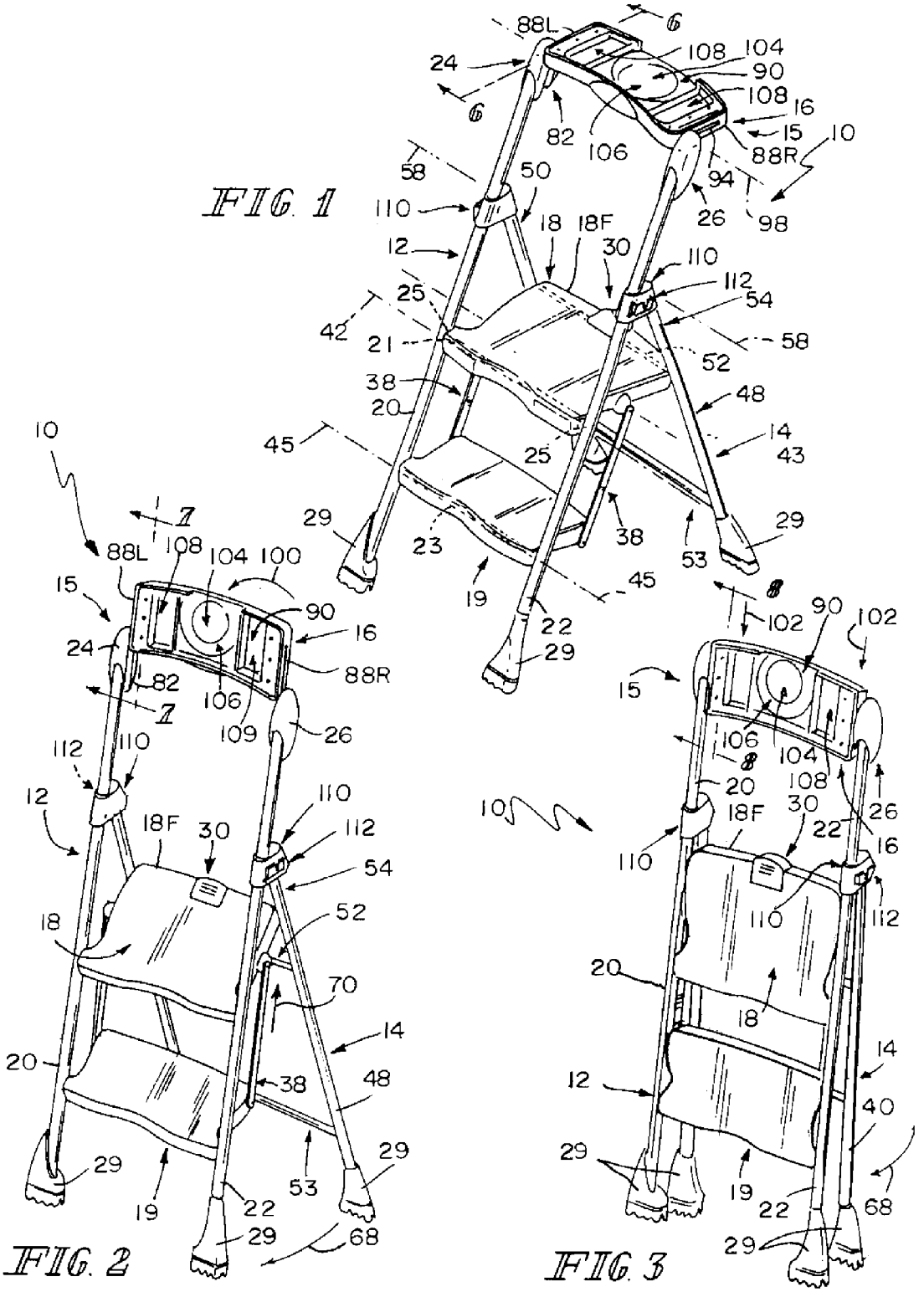

PGR2026-00044
TRICAM EX1007

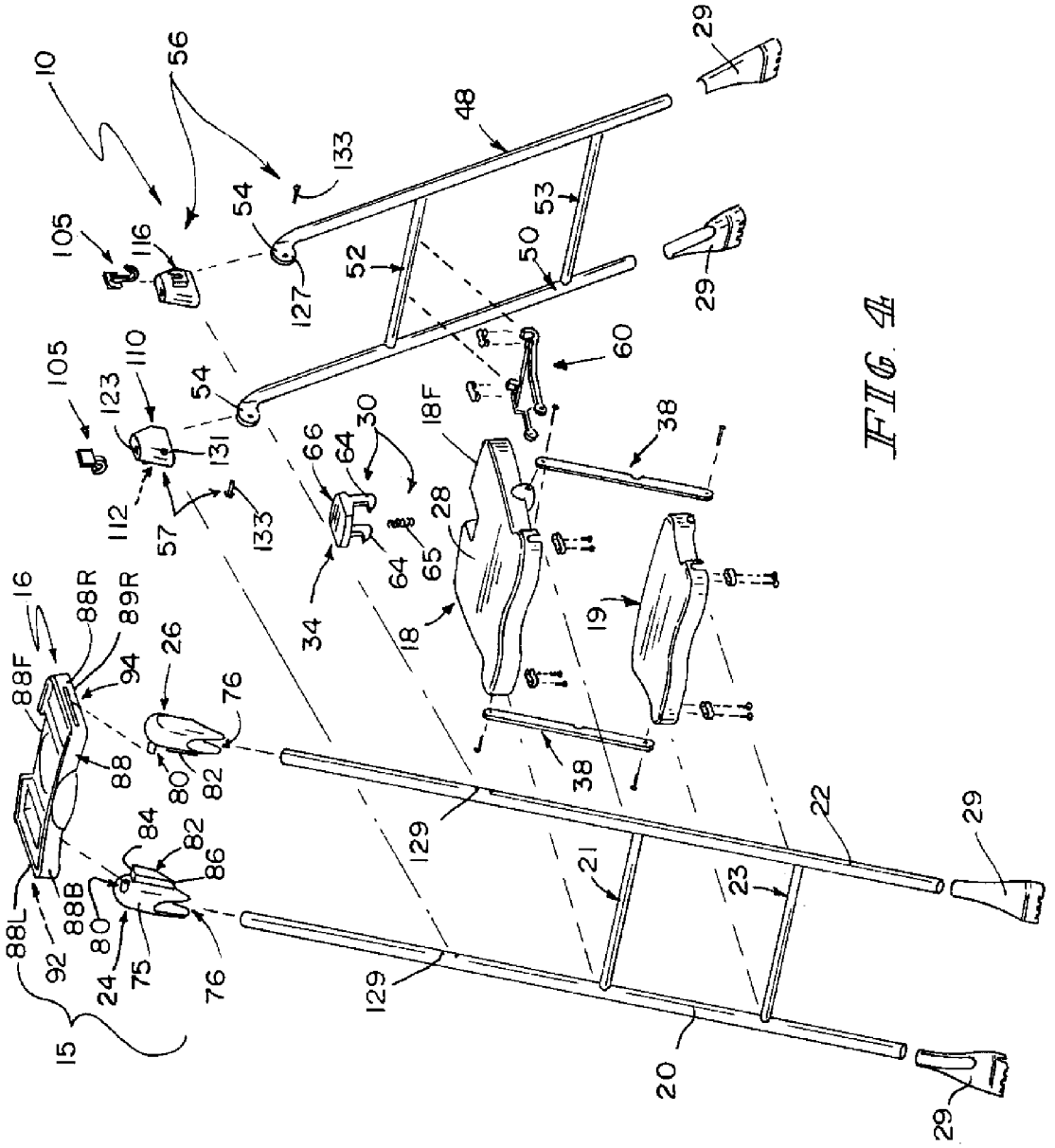

FIG. 4

PGR2026-00044
TRICAM EX1007

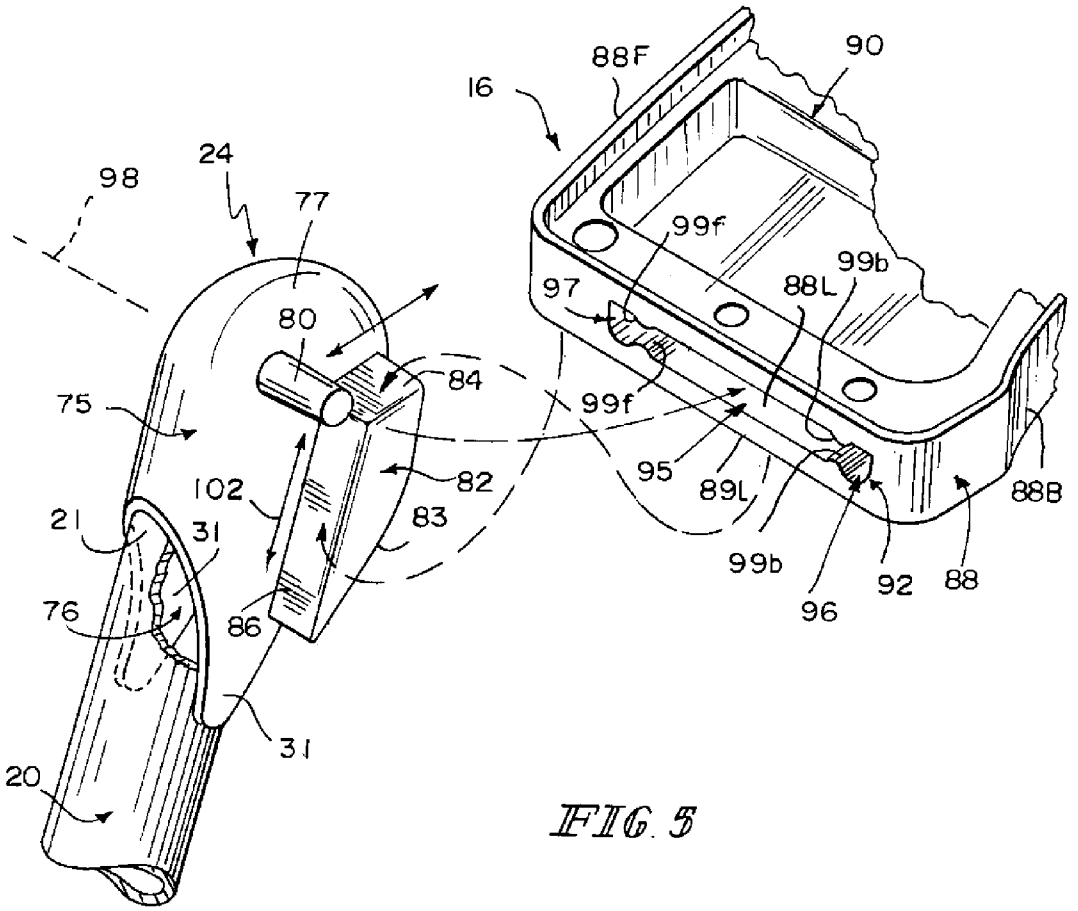
88F
90
16
24
98
77
99f
99b
97
88L
80
84
75
99f
95
102
82
89L
88B
21
31
83
99b
92
88
76
86
96
31
20

FIG. 5

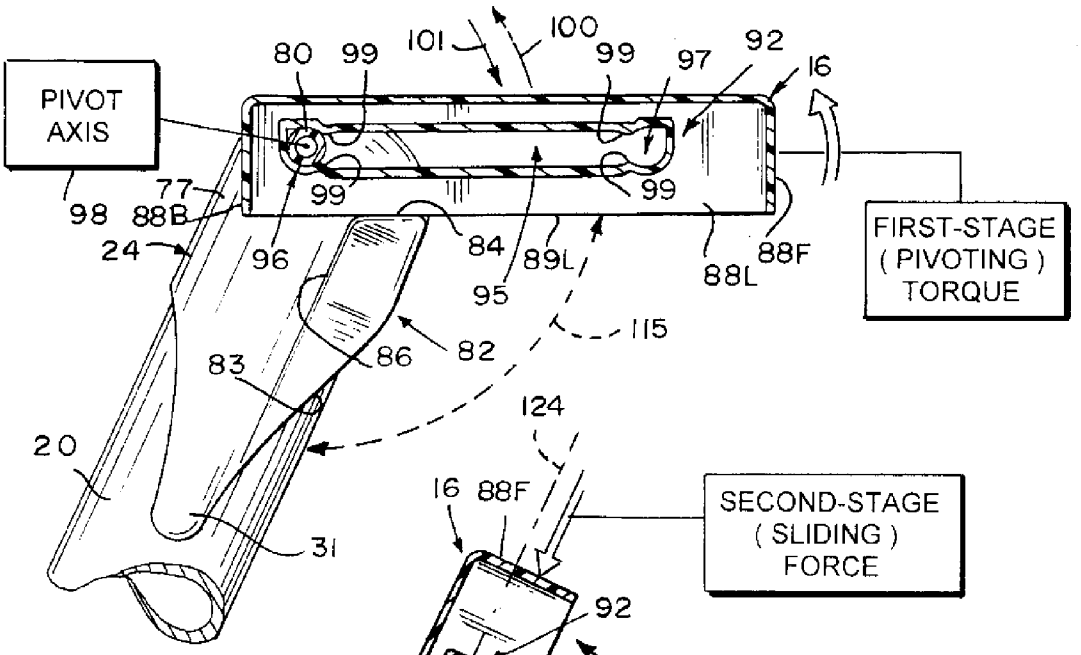

FIG. 6

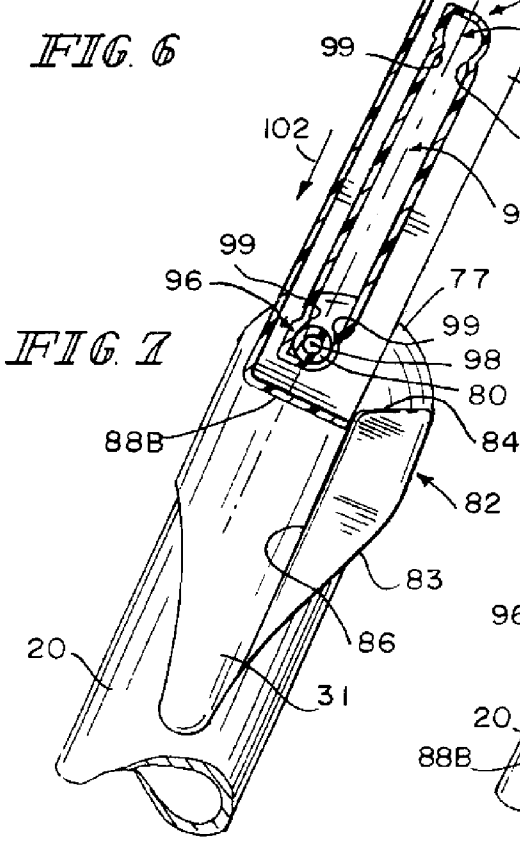

FIG. 7

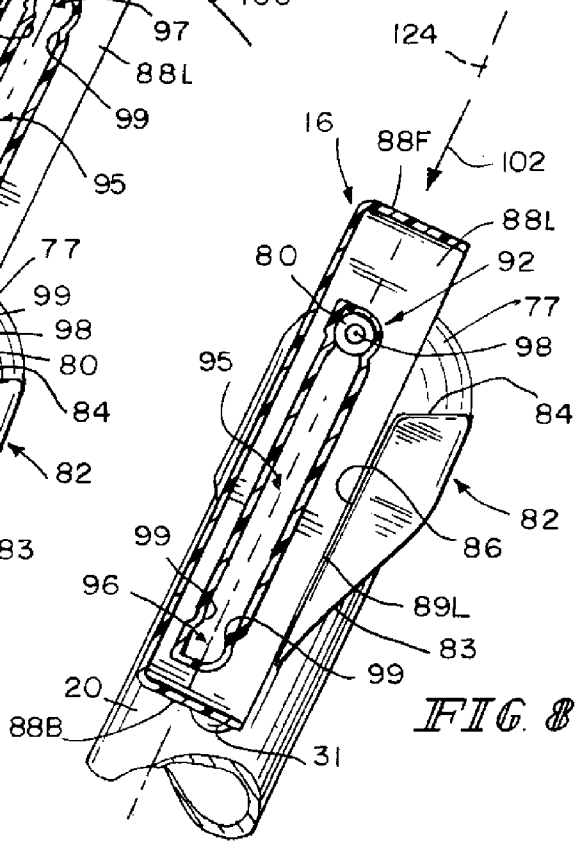

FIG. 8

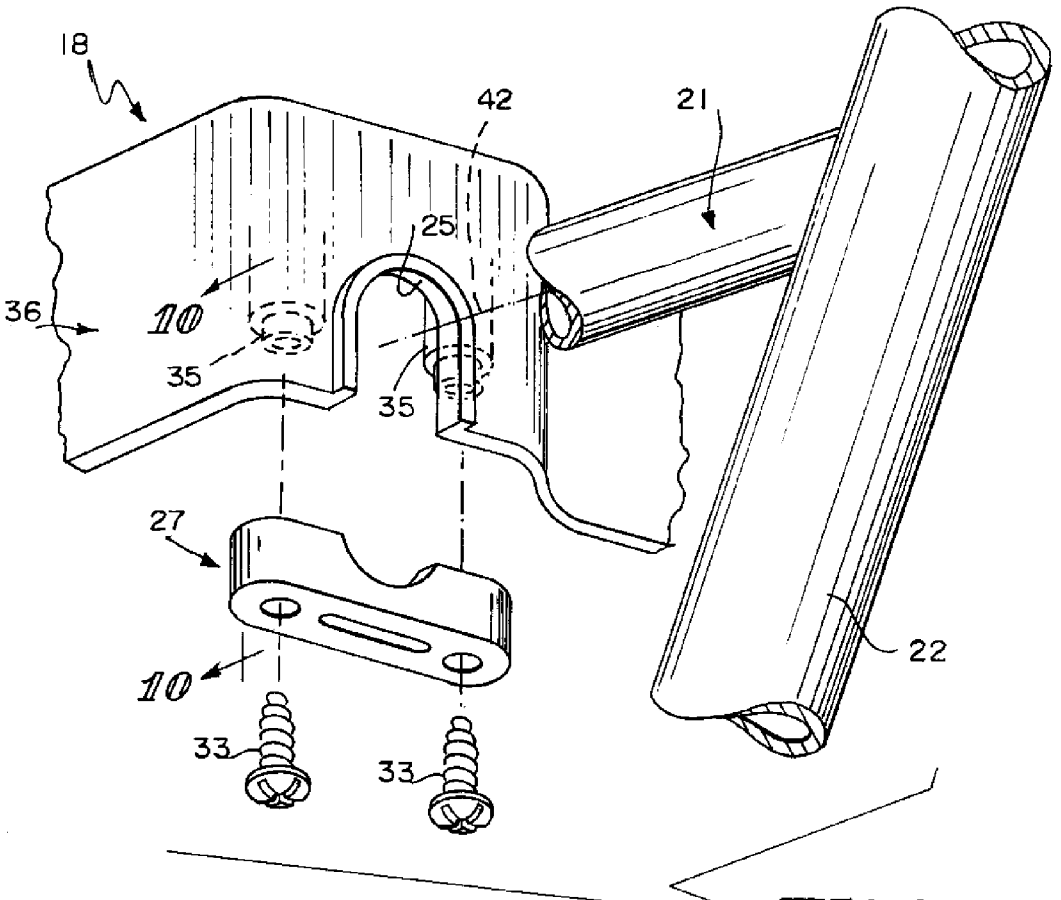

FIG. 9

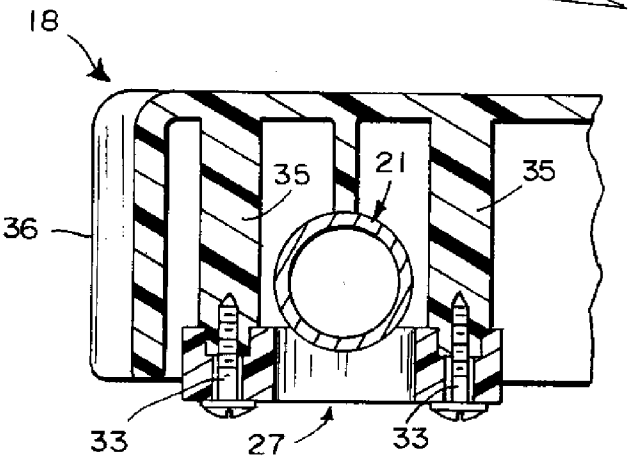

FIG. 10

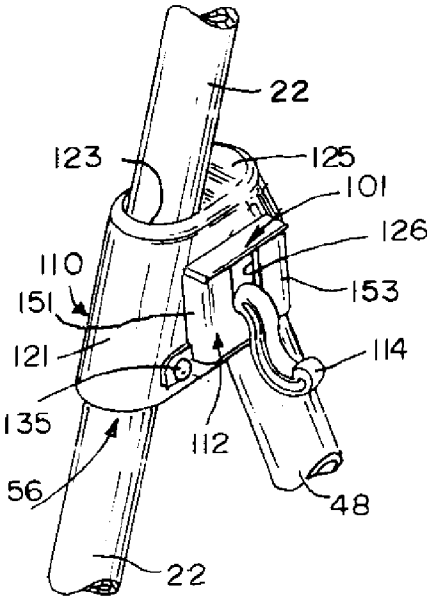

FIG. 11

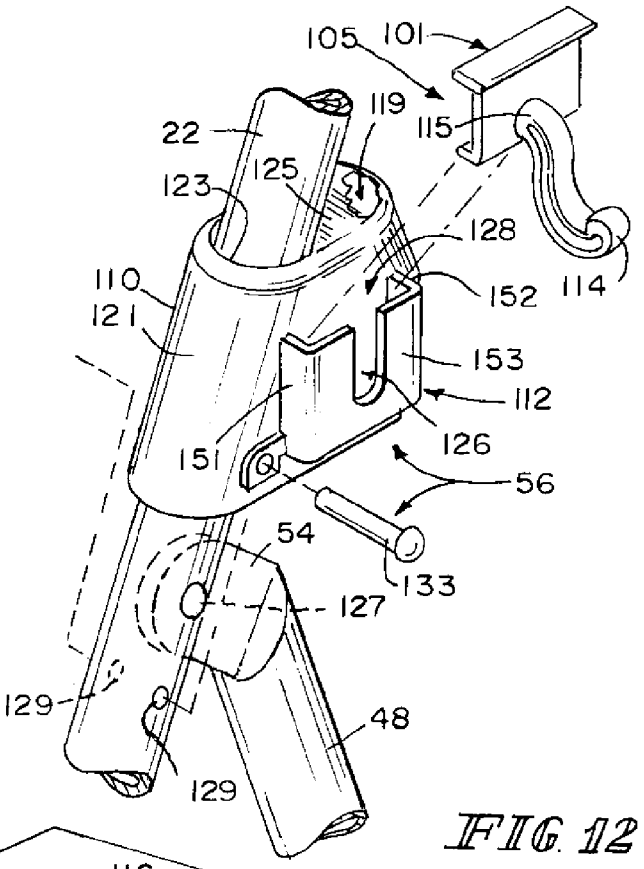

FIG. 12

FIG. 13

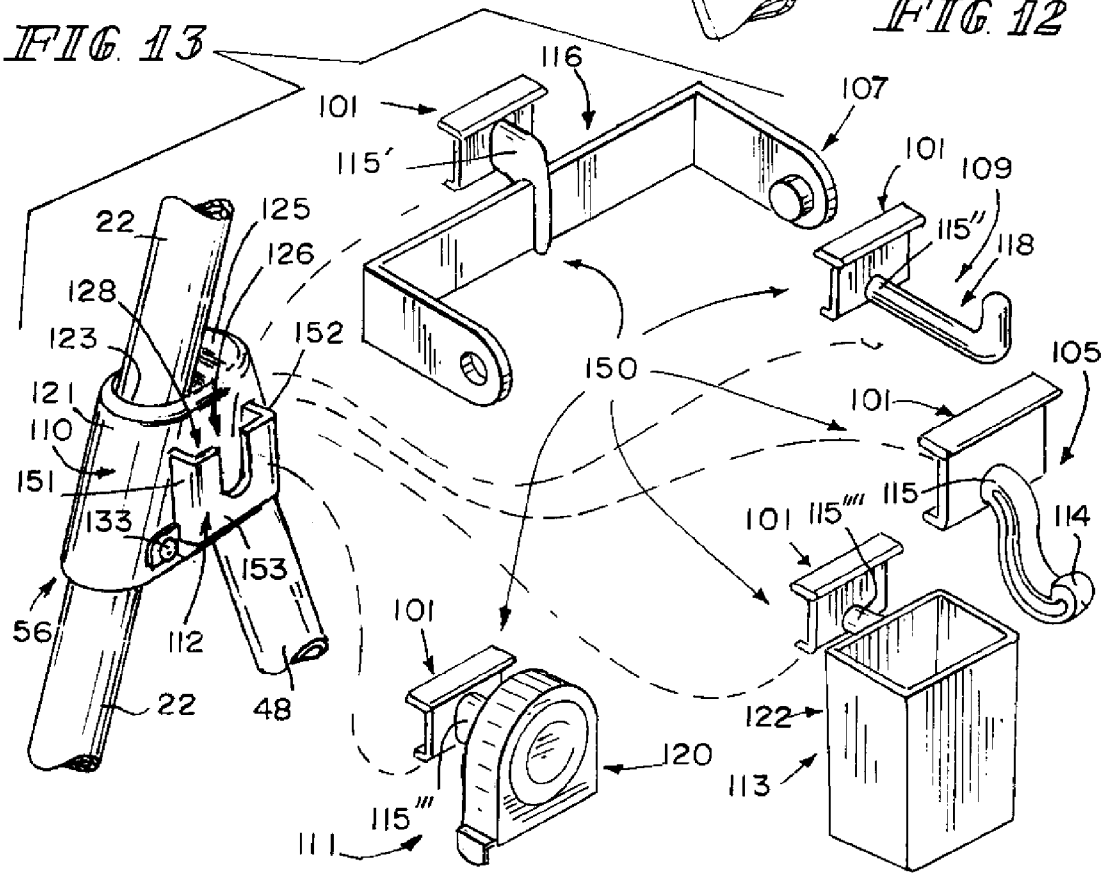

PGR2026-00044
TRICAM EX1007

STEPLADDER

This application claims priority under 35 U.S.C. §119(e) to U.S. Provisional Application Ser. No. 60/870,464, filed Dec. 18, 2006, which is expressly incorporated by reference herein.

BACKGROUND

The present disclosure relates to ladders and particularly to stepladders. More particularly, the present disclosure relates to a folding stepladder including a tray and a step mount system.

Stepladders have a frame and one or more steps that people use for elevation when reaching for objects, painting walls, or any everyday task where extra elevation would be helpful. Stepladders are often foldable for ease of storage when the stepladder is not being used.

SUMMARY

According to the present disclosure, a foldable stepladder includes a step frame coupled to a relatively shorter stabilizer frame for folding movement relative to the step frame between an expanded use position and a collapsed storage position. The stepladder also includes a pivotable utility tray mounted on the step frame for movement relative to the step frame between use and storage positions.

In illustrative embodiments, the utility tray is movable independent of the folding action of the frames. In one illustrative embodiment, the utility tray is mounted for pivoting and sliding movement relative to the legs of the step frame. The utility tray is mounted to pivot about an axis relative to the legs of the step frame between a horizontal use position and an extended intermediate position. The utility tray is also mounted to slide back and forth along the legs of the step frame between an extended intermediate position and a retracted storage position.

In illustrative embodiments, an accessory mount is also included in the stepladder and is configured to receive a variety of separate fixtures included in an accessory kit to assist a user such as, for example, an electrical cord hook, a paper towel holder, a brush holder, or other devices to hold tools or implements. The accessory mount is configured to use a friction fit to retain the variety of fixtures in a mounted position thereon.

In illustrative embodiments, the stabilizer frame further includes a first hinge providing means for coupling a first leg of the stabilizer frame to a first leg of the step frame to support the stabilizer frame for pivotable movement about a frame pivot axis relative to the step frame. The first hinge includes a hinge pin coupled to the first legs of the step and stabilizer frames and a hinge-pin mount mated to the step and stabilizer frames and configured to carry the hinge pin. The first hinge also includes the accessory mount and the accessory mount is coupled to the hinge-pin mount in illustrative embodiments.

An illustrative step mount system provided in accordance with the present disclosure comprises a strap and a fastener for coupling the strap to a step to trap a rung of the step frame in a rung receiver formed in the step. The strap and fastener cooperate to trap the mount rung between the step and the strap yet allow pivoting movement of the step about a pivot axis established by the mount rung.

Additional features of the present disclosure will become apparent to those skilled in the art upon consideration of the following detailed description of illustrative embodiments exemplifying the best mode of carrying out the disclosure as presently perceived.

BRIEF DESCRIPTION OF THE DRAWINGS

The detailed description particularly refers to the accompany figures in which.

FIG. **1** is a perspective view of a stepladder in accordance with the present disclosure showing a step frame including legs, feet, steps, and step-support apparatus, a relatively shorter stabilizer frame including legs, rungs, and feet, and a tray unit mounted to the top of the step frame and formed to include a utility tray supported for, in separate stages, pivoting movement and sliding movement relative to the step frame as suggested in FIGS. **6-8** "independent" of the folding action of the frames;

FIG. **2** is another perspective view of the stepladder of FIG. **1** showing movement of the frames toward one another as the stepladder is folded to change from an expanded use position shown in FIG. **1** to a collapsed storage position shown in FIG. **3** and showing a "first stage" of movement of the utility tray relative to the step frame after the utility tray has been pivoted in a "counterclockwise" direction to move from a horizontal use position shown in FIG. **1** to assume an extended intermediate position;

FIG. **3** is a perspective view of the stepladder of FIG. **1** showing the stepladder after it has been folded to assume the collapsed storage position and showing a "second stage" of movement of the utility tray relative to the step frame after the utility tray has been moved downwardly along legs included in the step frame from the extended intermediate position shown in FIG. **2** to assume a retracted storage position;

FIG. **4** is an exploded perspective view of illustrative components included in the stepladder of FIG. **1** showing that the tray unit includes separate stationary left and right tray mounts configured to be mounted on left and right legs included in the longer step frame and a movable utility tray configured to be mounted on the left and right tray mounts for pivoting and sliding movement relative to the step frame as suggested in FIGS. **1-3**;

FIG. **5** is an enlarged perspective view of a portion of the stepladder of FIGS. **1-4** showing that the left tray mount is coupled to a top end of the left leg of the step frame, the left tray mount includes a cap coupled to the left leg, a tray brace coupled to the cap, and a pivot post coupled to the cap and arranged to lie adjacent to the tray brace and showing a post-receiver slot formed in a side wall of the utility tray and adapted to receive the pivot post of the left tray mount to facilitate pivoting and sliding movement of the utility tray relative to the left tray mount and the left leg;

FIG. **6** is an enlarged partial sectional view taken along line **6-6** of FIG. **1** showing the utility tray oriented to lie in a horizontal use position at an obtuse angle of about 115° relative to the left leg included in the step frame;

FIG. **7** is an enlarged partial sectional view taken along line **7-7** of FIG. **2** showing the utility tray after it has been pivoted about a pivot axis established by the pivot post included in the left tray mount in a counterclockwise direction relative to the left leg in the step frame in response to application of a first-stage (pivoting) torque to the utility by a user to cause the utility tray to move to assume an "inclined" extended intermediate position;

FIG. **8** is an enlarged partial sectional view taken along line **8-8** of FIG. **3** showing the utility tray in the retracted storage position after it has been slid downwardly from the extended intermediate position shown in FIG. **7** along an inclined slide

path established by mating engagement of the utility tray, pivot post, and tray brace in response to application of a second-stage (sliding) force to the utility tray by a user to cause the utility tray to move to assume the retracted storage position;

FIG. **9** is an exploded perspective view of illustrative components included in a step mount system including a strap which couples to an adjacent step to mount a step to an adjacent rung;

FIG. **10** is a sectional view taken along line **10-10** of FIG. **9** showing the strap coupled to a companion step to secure the step to a companion rung;

FIG. **11** is a perspective view of a first hinge-pin mount included in the foldable stepladder and showing an accessory mount coupled to an outer portion of the first hinge-pin mount and a removable utility hook coupled to the accessory mount;

FIG. **12** is a perspective view similar to FIG. **11** showing installation of the first hinge-pin mount on one of the legs of the step frame and installation of the utility hook on the accessory mount; and

FIG. **13** is an exploded perspective view of illustrative stepladder accessories (e.g., a paper towel holder, a tape measure, a cord hook, and an instrument holder) included in an accessory kit and configured to be coupled, one at a time, to the accessory mount coupled to the first hinge-pin mount.

DETAILED DESCRIPTION

A stepladder **10** includes a step frame **12**, a relatively shorter stabilizer frame **14**, and a pivotable and slidable utility tray **16** included in a tray unit **15** coupled to a top end of step frame **12** as shown in FIG. **1**. Step frame **12** and stabilizer frame **14** are pivotably coupled to one another to move from an expanded "use" position shown in FIG. **1** toward a collapsed "storage" position shown in FIG. **3**. Utility tray **16** is movable (e.g., pivotable and slidable) in two stages independent of any folding action of step frame **12** and stabilizer frame **14** as suggested in FIGS. **1-3** and FIGS. **6-8**. It is within the scope of this disclosure to include tray unit **15** in any suitable folding or non-folding ladder. Stabilizer frame **14** includes a hinge system **56**, **57** associated with step frame **12** and formed to include an accessory mount **112** configured to mate, one at a time, with each of the accessories included in an accessory kit **150** as shown, for example, in FIGS. **11-13**.

Step frame **12** includes a top step **18**, lower step **19**, a left leg **20**, a right leg **22**, and a pair of mount rungs **21**, **23** extending between and interconnecting left and right legs **20**, **22** as shown in FIGS. **1** and **4**. A rear portion of top step **18** is configured to be coupled to upper mount rung **21** while a rear portion of lower step **19** is configured to be coupled to lower mount rung **23** as suggested in FIGS. **1** and **4**.

Downwardly extending lip **36** of top step **18** is formed to include a pair of U-shaped rung receivers **25** sized to receive mount rung **21** therein as suggested in FIGS. **1**, **9**, and **10**. Step **18** is also formed to include a pair of interior strap mounts **35** associated with each rung receiver **25**. A strap **27** mates with mount rung **21** and is coupled to strap mounts **35** using fasteners **33** as suggested in FIGS. **9** and **10** to trap mount rung **21** between step **18** and strap **27** yet allow pivoting movement of step **18** about a pivot axis **42** established by mount rung **21**. Lower step **19** is mounted for pivotable movement about pivot axis **45** on mount rung **23** using similar means and structure.

Top step **18** is configured, in an illustrative embodiment, to provide bracing means to inhibit undesired collapsing when stepladder **10** is in the expanded use position as shown in FIG. **1**. Step frame **12** also includes a foot **29** coupled to a lower end of each of legs **20**, **22** as suggested in FIGS. **1-4**. Step frame **12** is illustrative and any suitable frame can be used in combination with tray unit **15** in accordance with the present disclosure.

Tray unit **15** further includes a left (first) tray mount **24** and a right (second) tray mount **26** as suggested in FIGS. **1** and **4**. Tray mounts **24**, **26** cooperate to provide tray-controller means for supporting utility tray **16** for pivoting movement about a pivot axis **98** during a first stage of movement relative to step frame **12** and for sliding movement relative to pivot axis **98** during a second stage of movement so that utility tray **16** can be moved by a user relative to step frame **12**, in series, among a horizontal use position, an extended intermediate position, and a retracted storage position (as suggested in FIGS. **6-8**) independent of any folding action of frames **12**, **14** included in stepladder **10**.

Left and right tray mounts **24**, **26** are coupled to the top of left and right legs **20**, **22**, respectively, and to utility tray **16** as suggested in FIGS. **1-3**. Left tray mount **24** and right tray mount **26** are similar to one another in structure and function so that the description of left tray mount **24** herein applies to right tray mount **26** as well.

Each tray mount **24**, **26** includes a cap **74**, a pivot post **80** coupled to cap **74**, and a tray brace **82** appended to cap **74** as shown, for example, in FIG. **4**. Cap **74** is configured to be mounted in a stationary position on one of legs **20**, **22** included in step frame **12**. An enlarged view of an illustrative cap **74**, pivot post **80**, and tray brace **82** included in left tray mount **24** is shown in FIG. **5**.

As suggested in FIGS. **4** and **5**, cap **75** is hollow and is formed to include an interior region **76** sized to receive a top end **21** of left leg **20**. Cap **75** is retained in a fixed position on top end **21** of left leg **20** (or any other suitable location on step frame **12**) using any suitable means. As suggested in FIG. **5**, cap **75** is helmet-shaped. Each cap **75** includes a dome **77** and a pair of somewhat V-shaped side walls **31** coupled to a lower portion of dome **77** and arranged to extend downwardly as suggested in FIG. **5**.

Each pivot post **80** is cantilevered to dome **77** of cap **75** and arranged to extend away from interior region **76** of cap **75** as suggested in FIG. **4**. In an illustrative embodiment, pivot post **80** has a frustoconical shape as shown best in FIG. **5**. Pivot posts **80** included in left and right tray mounts **24**, **26** are arranged to extend toward one another along an imaginary line when caps **75** are mounted on legs **20**, **22** to establish a pivot axis **98** along that imaginary line for utility tray **16** as suggested in FIGS. **1** and **6-8**. Pivot posts **80** cooperate to provide means for supporting utility tray **16** for pivotable movement about pivot axis **98** during a first stage of movement of utility tray **16** relative to step frame **12** as suggested in FIGS. **6** and **7**.

Each tray brace **82** is configured and arranged to provide horizontal platform means for supporting utility tray **16** in the horizontal use position relative to left and right tray mounts **24**, **26** as suggested, for example, in FIGS. **1** and **6**. Each tray brace **82** is also configured and arranged to provide inclined platform means for supporting utility tray **16** for sliding movement relative to dome **77** of a companion cap **75** coupled to step frame **12** between an extended intermediate position shown, for example, in FIG. **7** and a retracted storage position shown, for example, in FIG. **8**. Tray brace **82** includes a first planar surface **84**, a second planar surface **86**, and an obliquely shaped outwardly facing surface **83** as suggested in FIGS. **5-8**. Outwardly facing surface **83** extends generally along an exterior edge of one of V-shaped walls **31** of cap **75** as suggested in FIGS. **6** and **7**. Tray brace **82** is positioned to lie below and in a spaced-apart relation to pivot post **80** as suggested in FIGS. **5** and **6**.

PGR2026-00044
TRICAM EX1007

First planar surface **84** of tray brace **82** provides a horizontal platform that is arranged to lie in a generally horizontal orientation when stepladder **10** is positioned in the expanded use position as suggested in FIGS. **1** and **6**. Second planar surface **86** of tray brace **82** provides an inclined platform that is inclined and arranged to extend downwardly away from first planar surface **84** to define an included angle therebetween of about 115° as suggested in the illustrative embodiment shown in FIG. **6**. Second planar surfaces **86** of left and right tray mounts **24**, **26** cooperate to support utility tray **16** for sliding movement relative to pivot axis **98** during a second stage of movement relative to step frame **12** as suggested in FIGS. **7** and **8**. Pivot post **80** and second planar surface **86** cooperate to constrain motion of utility tray **16** to follow an inclined path **124** relative to cap **75** during movement of utility tray **16** from the extended intermediate position shown in FIG. **7** toward the retracted storage position shown in FIG. **8**.

Utility tray **16** is coupled to left and right tray mounts **24**, **26** to allow and control movement of utility tray **16** between a horizontal use position shown in FIG. **1** to a retracted storage position shown in FIG. **3**. Utility tray **16** includes a side wall **88** depending from and surrounding an interior plate wall **90** of utility tray **16**. Side wall **88** includes, in series, a left-side section **88**L, a back section **88**B, a right-side section **88**R, and a front section **88**F as suggested in FIG. **4**.

As shown best in FIG. **5**, left-side section **88**L of side wall **88** of utility tray **16** is formed to include a left post-receiver slot **92** sized and shaped to receive pivot post **80** of left tray mount **24** therein during movement of utility tray **16** relative to step frame **12** between the horizontal use position, the extended intermediate position, and the retracted storage position as suggested in FIGS. **6**-**8**. Similarly, right-side section **88**R of side wall **88** of utility tray **16** is formed to include a right post-receiver slot **94** sized and shaped as suggested in FIGS. **1** and **4** to receive pivot post **80** of right tray mount **26** therein during movement of utility tray **16** relative to step frame **12** as suggested in FIGS. **1**-**3**.

As suggested in FIG. **5**, left-side section **88**L is formed to include a first post receiver **96** in a back end portion of utility tray **16** near back section **88**B of side wall **88** and a second post receiver **97** in an opposite front end portion of utility tray **16** near front section **88**F of side wall **88**. Left-side section **88**L also is formed to include an oblong elongated guide channel **95** extending between and interconnecting first and second post receivers **96**, **97** as suggested in FIG. **5**.

Left-side section **88**L also includes a first set of detents **99***b* arranged to extend into left post-receiver slot **92** and toward one another as suggested in FIG. **5** to define first partition means for separating guide channel **95** from first post receiver **96** yet allowing pivot post **80** to pass through a space provided in left post-receiver slot **92** between detents **99***b* as pivot post **80** moves between guide channel **95** and first post receiver **96**. Detents **99***b* cooperate to provide means for temporarily retaining pivot post **80** of left tray mount **24** in first post receiver **96** while utility tray **16** is oriented to lie in the horizontal use position as shown in FIG. **6** and during first-stage pivoting movement of utility tray **16** relative to step frame **12** about pivot axis **98** as suggested in FIGS. **6** and **7**.

Left-side section **88**L also includes a second set of detents **99***f* arranged to extend into left post-receiver slot **92** and toward one another as also suggested in FIG. **5** to define second partition means for separating guide channel **95** from second post receiver **97** yet allowing pivot post **80** to pass through a space provided in left post-receiver slot **92** between detents **99***f* as pivot post **80** moves between guide channel **95** and second post receiver **97**. Detents **99***f* cooperate to provide means for temporarily retaining pivot post **80** of left tray mount **24** in second post receiver **96** after sliding movement of utility tray **16** relative to step frame **12** along path **124** to block unwanted relative movement of utility tray **16** and step frame **12** after arrival of utility tray **16** at the retracted storage position as suggested in FIG. **8**.

When utility tray **16** is moved to the horizontal use position it cooperates with step frame **12** to define an obtuse angle **115** therebetween as shown best in FIG. **6**. In the horizontal use position of FIG. **6**, at least a portion of a lower edge **89**L of left-side section **88**L of side wall **88** of utility tray **16** rests on and is supported by first planar surface **84** of tray brace **82** of left tray mount **24** to block further pivotable movement of utility tray **16** in a clockwise direction **101** about pivot axis **98** relative to step frame **12**. Similarly, in the horizontal use position, at least a lower edge **89**R (see FIG. **4**) of right-side section **88**R of side wall **88** of utility tray **16** rests on and is supported by first planar surface **84** of tray brace **82** of right tray mount **24** to help block pivotable movement of utility tray **16** in clockwise direction **101** about pivot axis **98** relative to step frame **12**.

In operation, to move utility tray **16** from the horizontal use position toward the retracted storage position, the user pivots utility tray **16** about pivot axis **98** in a counterclockwise direction **100** relative to step frame **12** to assume an "inclined" extended intermediate position as shown in FIGS. **2** and **7**. To move utility tray **16** from the extended intermediate position toward the retracted storage position, the user moves utility tray **16** downwardly in a direction **102** along inclined path **124** established on step frame **12**. During such movement, each pivot post **80** leaves its companion first post receiver **96** and passes through the companion guide channel **95** in a direction toward the companion second post receiver **97**. In the retracted storage position, at least a portion of lower edge **89**L of side wall **88**L confronts second planar surface **86** to block further pivotable movement in a clockwise direction relative to step frame **12** as suggested in FIG. **8**.

As suggested in FIG. **4**, step frame **12** further includes a first step link **60**, a pair of second step links **38**, and a step lock **30**. Step links **38** and **60** cooperate to control movement of steps **18** and **19** relative to frames **12**, **14** during folding and unfolding of frames **12**, **14**. Reference is made to U.S. Pat. No. 6,550,579, which reference is hereby incorporated by reference herein, for disclosures relating to motion control and locking control of steps included in a foldable stepladder **10**.

First step link **60** is adapted to be coupled to top step **18** and to a strut **52** included in stabilizer frame **14** to coordinate movement of top step **18** and stabilizer frame **14** during folding and unfolding of frames **12**, **14**. Each second step link **38** is adapted to be coupled to top step **18** and to lower step **19** to coordinate movement of steps **18**, **19** relative to frames **12**, **14** during folding and unfolding of frames **12**, **14** as suggested in FIGS. **1**-**3**.

Stabilizer frame **14** includes a first support member or leg **48**, a second support member or leg **50**, an anchor rung **52**, and a lower rung **53**, as shown, for example, in FIG. **4**. Anchor and lower rungs **52**, **53** lie in spaced-apart relation to one another and extend between and interconnect first and second support members **48**, **50** as suggested in FIGS. **2** and **4**. Stabilizer frame **14** further includes a foot **29** coupled to a bottom end of each of support members **48**, **50**.

First and second hinges **56**, **57** are included in stabilizer frame **14** of foldable stepladder **10** as suggested in FIG. **4**. Each hinge **56**, **57** includes a hinge pin **109** and a hinge-pin mount **110** as suggested in an illustrative embodiment shown in FIG. **4**. Hinges **56**, **57** function to allow stepladder **10** to be

PGR2026-00044
TRICAM EX1007

reconfigured to change from the collapsed storage position shown in FIG. **3** where step frame **12** and stabilizer frame **14** are arranged to lie in a generally parallel relation to one another to the expanded use position shown in FIG. **3** where step frame **12** and stabilizer frame **14** are arranged to lie in a splayed or non-parallel relation to one another as shown in FIG. **1**.

Step lock **30** includes a pivotable latch **34** having a pair of latch hooks **64** and a grip **66** as shown, for example, in FIG. **4**. First step link **60** is pivotably coupled to top step **18** on one end and to anchor rung **52** on another end as suggested in FIG. **4**. Link **60** is configured to cause a "free" end **18***f* of top step **18** to pivot toward step frame **12** upon movement of frames **12**, **14** from the expanded use position of FIG. **1** toward the collapsed storage position of FIG. **3**.

Pivotable latch **34** is pivoted toward step frame **12** to cause camming movement of first and second latch hooks **64** on anchor rung **52** during movement from an unlocked position above horizontal anchor rung **52** toward a pivoted position alongside anchor rung **52** and then toward an engaged position below anchor rung **52**. Step lock **30** also includes a latch-biasing return spring **63** arranged to engage pivotable latch **34**.

Stepladder **10** is changeable between the expanded use position, shown in FIG. **1**, and the collapsed storage position shown, with portions broken away, in FIG. **3**. In the expanded use position, step frame **12** is spaced apart from stabilizer frame **14**. In the collapsed storage position, right leg **22** and first support member **48** are arranged to lie adjacent to each other and left leg **20** and second support member **50** are arranged to lie adjacent to each other, as shown in FIG. **3**.

In operation, to "change" stepladder **10** from the expanded use position to the collapsed storage position, the user first moves pivotable latch **34** from the locked position to the unlocked position by grasping grip **66** and pivoting grip **66** toward step frame **12** and away from stabilizer frame **14** against a latch-biasing force provided by return spring **65** to disengage latch hooks **64** from anchor rung **52**. When latch hooks **64** have disengaged from anchor rung **52**, the user is able to move a free end **18**F of top step **18** toward step frame **12** as suggested in FIGS. **2** and **3**.

As latch **34** and top step **18** are moved toward step frame **12**, first step link **60** urges stabilizer frame **14** to pivot about frame pivot axis **58** in a direction **68** and urges second step links **38** to move in a direction **70** so that step **19** pivots about a lower-step axis **45** to move toward a position substantially parallel to step frame **12** and positioned to lie between left and right legs **20**, **22** as suggested in FIGS. **2** and **3**. Similarly, top step **18** pivots about a top-step pivot axis **42** in direction **72** to move toward a position substantially parallel to step frame **12** and positioned to lie between left and right legs **20**, **22** as suggested in FIGS. **2** and **3**. Simultaneously, stabilizer frame **14** is moved in a direction **68** to lie substantially parallel to step frame **12** to establish the collapsed storage position shown in FIG. **3**.

In an illustrative embodiment, an upper surface **104** of interior plate **90** of utility tray **16** may be formed to include a container receiver **106** and implement receivers **108** configured to receive and hold various items that a user may be working with, for example, to perform household chores as shown in FIGS. **1-3**. Since utility tray **16** is movable independent of any folding action of step frame **12** and stabilizer frame **14**, a user may choose to maintain utility tray **16** in the retracted storage position of FIG. **3** to use such, for example, as a "grab" bar to assist in maintaining balance.

Each of hinges **56**, **57** included in stabilizer frame **14** of foldable stepladder **10** is also formed to include an accessory mount **112** as suggested in FIG. **4**. Accessory mount **112** is configured to mate with and support a stepladder accessory such as a power-cord hook or other holder or clamp. In an illustrative embodiment shown in FIGS. **11-13**, an accessory mount **112** is included in hinge **56** and configured to mate with and support, one at a time, each of the stepladder accessories included in accessory kit **150**.

In an illustrative embodiment, each of hinges **56**, **57** includes a hinge pin **133**, a hinge-pin mount **110** configured to mate with hinge pin **133**, and an accessory mount **112** coupled to a companion hinge-pin mount **110**. In an illustrative embodiment, hinge-pin mount **110** and accessory mount **112** cooperate to form a monolithic component made of a molded plastics material.

As suggested in FIGS. **4** and **12**, hinge-pin mount **110** is formed to include hinge-pin aperture(s) **131** sized to receive hinge pin **133** therein. Apertures **131** are aligned with hinge-pin apertures **129** formed in leg **22** of step frame **12** and a hinge-pin aperture **127** formed in upper portion **54** of support member (leg) **48** of stabilizer frame **14** as suggested in FIG. **12**.

Hinge-pin mount **110** also includes a top wall **125** formed to include a leg-receiver aperture **123** sized to receive a portion of leg **22** therein as suggested in FIGS. **4** and **12**. Hinge-pin mount **110** also includes a downwardly opening funnel-shaped side wall **121** depending from a perimeter edge of top wall **125**. Leg **22** is sized and shaped to extend into an interior region **119** formed in hinge-pin mount **110** and defined by top and side walls **125**, **121** as suggested in FIG. **12**.

Hinge-pin mount **110** is configured to slide downwardly on leg **22** in direction **117** as suggested in FIG. **12** to align hinge-pin apertures **131** formed in funnel-shaped side wall **121** with hinge-pin apertures **129**, **127** formed in legs **22**, **48** as suggested in FIGS. **12** and **13**. Once apertures **127**, **129**, **131** are aligned, hinge pin **133** can be passed through the apertures **127**, **129**, **131** to establish a pivot axis **98** about which stabilizer frame **14** pivots relative to step frame **12** during relative movement of frames **12**, **14** as suggested in FIGS. **1-3**. Upper portion **54** of support member **48** is housed in interior region **119** of hinge-pin mount **110** when hinge-pin mount **110** is anchored in place as suggested in FIGS. **12** and **13**.

Side wall **121** provides means for limiting angular separation of support member **48** of stabilizer frame **14** relative to leg **22** of step frame **12** as suggested in FIGS. **1** and **2**. Support member **48** contacts an inner surface of side wall **121** to limit splaying motion of support member **48** relative to companion leg **22**. Such splaying motion is also limited by engagement of step **18** with rung **52** as suggested in FIG. **1**.

Accessory mount **112** includes a mount plate **153** formed to include a neck-receiving slot **126** and first and second stand-off plates **151**, **152** as shown, for example, in FIGS. **12** and **13**. First stand-off plate **151** is rooted on funnel-shaped side wall **121** of hinge-pin mount **110** and coupled to one edge of mount plate **153** while second stand-off plate **152** is rooted on funnel-shaped side wall **121** and coupled to another edge of mount plate **153** to cause side wall **121**, mount plate **153**, and first and second stand-off plates **152** to cooperate to form a base receptacle **128** sized to receive a (common) base **101** included in each of the stepladder accessories included in accessory kit **150**.

As shown, for example, in FIGS. **12** and **13**, a utility hook **105** is one example of a stepladder accessory included in accessory kit **150**. Utility hook **105** comprises a base **101** and a "tool holder" comprising a carrier such as a hanger **114** and a neck **115** interconnecting base **101** and hanger **114**. Neck **115** is sized to fit into neck-receiving slot **126** when base **101**

PGR2026-00044
TRICAM EX1007

is deposited into and retained in base receptacle **128** formed in accessory mount **112** to support the tool holder **114**, **115** in a fixed position on hinge-pin mount **110**. In illustrative embodiments, (common) base **101** comprises vertical plate **161**, top plate **162**, and bottom plate **163** as suggested in FIGS. **12** and **13**. Vertical plate **161** is arranged to interconnect top and bottom plates **162**, **163** and is coupled to neck **115**.

Accessory mount **112** is configured to provide a mounting platform for numerous assistance devices such as a utility hook **105** having a carrier such as a hook **114** coupled to common base **101** by neck **115**, a paper towel holder **107** having a carrier such as a roll holder **116** coupled to common base **101**. Other accessories may include a power cord hook **109** having a carrier such as a hook **118** coupled to common base **101** by neck **115"**, a tape measure **111** having a carrier such as a tape measure reel **120** coupled to common base **101** by neck **115'''**, or a utility holder **113** having a carrier such as a receptacle **122** coupled to common base **101** by neck **115''''** and configured to hold various implements as needed by the user.

The invention claimed is:

1. A stepladder comprising

a frame unit including steps,

a utility tray,

tray-controller means for supporting the utility tray for pivoting movement about a pivot axis during a first stage of movement relative to the frame unit and for sliding movement relative to the pivot axis during a second stage of movement relative to the frame unit so that the utility tray can be moved by a user relative to the frame unit, in sequence, from a horizontal use position pivoting through an acute angle to attain an extended intermediate position, and then moving along an inclined path to attain a retracted storage position, and

wherein the utility tray is formed to include first and second post-receiver slots, the tray controller means includes a first tray mount that includes a first pivot post attached directly to a first leg of the frame, the first pivot post arranged to extend into the first post-receiver slot for movement therein, the tray controller means further includes a second tray mount that includes a second pivot post attached directly to a second leg of the frame, the second pivot post arranged to extend into the second post-receiver slot for movement therein and arranged to lie in axial alignment with the first pivot post to establish the pivot axis, each of the first and second post-receiver slots respectively has a first post receiver in a back end portion of the utility tray and a second post receiver formed in an opposite front end portion of the utility tray, the first pivot post lies within the first post receiver in the first post-receiver slot and the second pivot post lies within the first post receiver of the second post-receiver slot upon movement of the utility tray to attain each of the horizontal use position and the extended intermediate position, and the first pivot post lies within the second post receiver in the first post-receiver slot and the second pivot post lies within the second post-receiver in the second post-receiver slot upon movement of the utility tray to attain the retracted storage position alongside the step frame.

2. A stepladder comprising

a foldable frame unit including a step frame including spaced-apart first and second legs and steps coupled to the first and second legs, and a stabilizer frame coupled to the step frame for folding movement between an expanded use position away from the step frame to a collapsed storage position alongside the step frame,

a utility tray,

tray-controller means for supporting the utility tray for pivoting movement about a pivot axis, the tray moving relative to the step frame through an acute angle during a first stage of movement from a horizontal use position oriented to lie at an obtuse angle to the step frame to an extended intermediate position oriented to project upwardly away from the step frame and for sliding movement relative to the pivot axis during a second stage of movement from the extended intermediate position to a retracted storage position oriented to lie alongside the step frame, wherein the utility tray can moved relative to the step frame by a user, in series, among the horizontal use position, the extended intermediate position, and the retracted storage position independent of any folding action of the step and stabilizer frames included in the foldable frame unit,

wherein the tray-controller means includes a first tray mount coupled to the first leg of the step frame and a second tray mount coupled to the second leg of the step frame, the first and second tray mounts lie in spaced-apart relation to one another and at least a portion of the utility tray lies in a space provided between the first and second tray mounts upon movement of the utility tray to each of the horizontal use, extended intermediate, and retracted storage positions, and

wherein the utility tray is formed to include first and second post-receiver slots, the first tray mount includes a first pivot post attached directly to the first leg and extending into the first post-receiver slot for movement therein, the second tray mount includes a second pivot post attached directly to the second leg and extending into the second post-receiver slot for movement therein and to lie in axial alignment with the first pivot post to establish the pivot axis, each of the first and second post-receiver slots has a respective first post receiver in a back end portion of the utility tray and a respective second post receiver formed in an opposite front end portion of the utility tray, the first pivot post lies within the respective first post receiver in the first post-receiver slot and the second pivot post lies within the respective first post receiver of the second post-receiver slot upon movement of the utility tray to attain each of the horizontal use position and the extended intermediate position and the first pivot post lies within the respective second post receiver in the first post-receiver slot and the second pivot post lies within the respective second post-receiver in the second post-receiver slot upon movement of the utility tray to attain the retracted storage position alongside the step frame.

3. The stepladder of claim **2**, wherein each of the first and second tray mounts includes a horizontal surface arranged to mate with and support the utility tray at the obtuse angle relative to the step frame upon movement of the utility tray to attain the horizontal use position, and each of the first and second tray mounts respectively includes an inclined surface arranged to cooperate with the horizontal surface to define an obtuse angle therebetween and to mate with and support the utility tray for sliding movement along the step frame between the extended intermediate position and the retracted storage position.

4. The stepladder of claim **3**, wherein the first tray mount includes a cap retained in a fixed position on the first leg of the step frame and a tray brace appended to the cap and configured to include the horizontal and inclined surfaces.

5. The stepladder of claim **3**, wherein the utility tray is formed to include a first post-receiver slot, the first tray mount

includes a cap retained in a fixed position on the first leg of the step frame and a first pivot post coupled to the cap and arranged to extend away from the cap and into the first post-receiver slot for movement therein during movement of the utility tray relative to the step frame between the extended intermediate position and the retracted storage position, and the first pivot post is arranged to lie in spaced-apart relation to the respective inclined surface to allow a portion of the utility tray to move in a space provided between the first pivot post and the respective inclined post during sliding movement of the utility tray between the extended intermediate position and the retracted storage position.

6. The stepladder of claim **2**, wherein the utility tray is formed to cause the first post-receiver slot to include an elongated guide channel extending between and interconnecting the respective first and second post receivers and receiving the first pivot post therein to provide means for guiding the utility tray along an inclined path relative to the step frame during sliding movement of the utility tray relative to the first pivot post and the step frame from the extended intermediate position to the retracted storage position.

7. The stepladder of claim **6**, wherein the utility tray is also formed to include detent means located between the respective first post receiver and the elongated guide channel for temporarily retaining the first pivot post in the respective first post receiver while the utility tray is oriented to lie in the horizontal use position and during the first stage of movement of the utility tray relative to the step frame as the utility tray pivots about the pivot axis between the horizontal use position and the extended intermediate position.

8. The stepladder of claim **6**, wherein the utility tray is also formed to include detent means located between the elongated guide channel and the respective second post receiver for temporarily retaining the first pivot post in the respective second post receiver after sliding movement of the utility tray relative to the step frame along the inclined path and after arrival of the utility tray at the retracted storage position to block unwanted relative movement of the utility tray with respect to the step frame.

9. A stepladder comprising

a step frame including first and second legs and step coupled to the first the and second legs,

a stabilizer frame coupled to the step frame for pivotable movement about an axis of rotation occurring between an expanded use position arranged to lie in splayed relation to the step frame and a collapsed storage position arranged to lie alongside the step frame,

a tray unit including a utility tray configured to have a first post-receiver slot, a first tray mount coupled to the first leg and arranged to mate with the utility tray during pivoting and sliding movement of the utility tray relative to the first leg, and a second tray mount coupled to the second leg and arranged to mate with the utility tray during pivoting and sliding movement of the utility tray relative to the second leg, and

wherein the first tray mount includes a first cap directly coupled to the first leg, wherein the first cap includes a tray brace having a horizontal surface configured and aligned to mate with and support the utility tray upon movement of the utility tray relative to the step frame to attain a horizontal use position, the horizontal surface arranged to lie at an obtuse angle relative to the step frame, the tray brace further includes an inclined surface configured and aligned to mate with and support the utility tray for sliding movement along the step frame from an extended intermediate position wherein the utility tray extends upwardly beyond the first tray mount to a retracted storage position wherein the utility tray lies alongside the step frame, the first cap further having a first pivot post arranged to extend into and remain in the first post-receiver slot of the tray during pivoting and sliding movement of the utility tray relative to the step frame.

10. The stepladder of claim **9**, wherein the utility tray is formed to include a first post receiver at one end of the first post-receiver slot and the first pivot post is arranged to extend into and remain in the first post receiver during pivotable movement of the utility tray occurring between the horizontal use position and the extended intermediate position, the pivotable movement being about a pivot axis, the pivot axis being established by the first pivot post located away from the horizontal surface of the first tray mount.

11. The stepladder of claim **10**, wherein the utility tray is formed to include a second post receiver at another end of the first post-receiver slot and the first pivot post is arranged to extend into the second post receiver upon arrival of the utility tray at the retracted storage position.

12. The stepladder of claim **9**, wherein the utility tray is formed to include a first post receiver at one end of the first post-receiver slot and the first pivot post is arranged to extend into and remain in the first post receiver during pivotable movement of the utility tray occurring between the horizontal use position and the extended intermediate position, pivotable movement being about a pivot axis, the pivot axis being established by the first pivot post located away from the horizontal surface of the first tray mount, the utility tray is formed to include a second post receiver at another end of the first post-receiver slot and the first pivot post is arranged to extend into the second post receiver upon arrival of the utility tray at the retracted storage position, and the utility tray is also formed to include an elongated guide channel interconnecting the first and second post receivers and receiving the first pivot post therein during sliding movement of the utility tray on the inclined surface between the extended intermediate position and the retracted storage position.

13. The stepladder of claim **9**, wherein the utility tray is formed to include a first post receiver at one end of the first post-receiver slot and the first pivot post is arranged to extend into and remain in the first post receiver during pivotable movement of the utility tray occurring between the horizontal use position and the extended intermediate position, pivotable movement being about a pivot axis, the pivot axis being established by the first pivot post located away from the horizontal surface of the first tray mount, the utility tray is formed to include a second post receiver at another end of the first post-receiver slot and the first pivot post is arranged to extend into the second post receiver upon arrival of the utility tray at the retracted storage position, and the utility tray is also formed to include an elongated guide channel interconnecting the first and second post receivers and receiving the first pivot post therein during sliding movement of the utility tray on the inclined surface between the extended intermediate position and the retracted storage position, and wherein the utility tray further includes first detent means located between the first post receiver and the elongated guide channel for temporarily retaining the first pivot post in the first post receiver while the utility tray is oriented to lie in the horizontal use position and during a first stage of movement of the utility tray relative to the step frame as the utility tray pivots about the pivot axis between the horizontal use position and the extended intermediate position, and the utility tray further includes a second detent means located between the elongated guide channel and the second post receiver for temporarily retaining the first pivot post in the second post receiver

PGR2026-00044
TRICAM EX1007

after sliding movement of the utility tray relative to the step frame along an inclined path and after arrival of the utility tray at the retracted storage position to block unwanted relative movement of the utility tray with respect to the step frame.

14. The stepladder of claim **9**, wherein the utility tray is formed to include the first post-receiver slot and the first mount includes the first cap coupled to the first leg of the step frame, and the first cap is coupled to the first pivot post which is arranged to extend into and remain in the first-post receiver slot during pivoting and sliding movement of the utility tray relative to the step frame.

15. The stepladder of claim **14**, wherein the utility tray is formed to include a first post receiver at one end of the first post-receiver slot and the first pivot post is arranged to extend into and remain in the first post receiver during pivotable movement of the utility tray occurring between the horizontal use position and the extended intermediate position, pivotable movement being about a pivot axis, the pivot axis being established by the first pivot post located away from the horizontal surface of the first tray mount.

16. The stepladder of claim **9**, wherein the stabilizer frame includes a first support member and a first hinge coupled to the first leg and to the first support member, the first hinge includes a hinge pin coupled to the first leg and to the first support member to provide means for supporting the first support member for pivotable movement about the axis of rotation between the expanded use position and the collapsed storage position, and the first hinge also includes a hinge-pin mount coupled to the hinge pin to support the hinge pin in coextensive relation to an axis of rotation and an accessory mount coupled to the hinge-pin mount and formed to include a base receptacle, and further comprising a stepladder accessory including a tool holder and a base coupled to the tool holder and located in the base receptacle of the accessory mount to support the tool holder in a fixed position on the hinge-pin mount.

17. The stepladder of claim **16**, wherein the hinge-pin mount includes a top wall formed to include a leg-receiver aperture receiving a portion of the first leg of the step frame therein and a downwardly opening funnel-shaped side wall depending from the top wall and surrounding mating portions of the first leg of the step frame and the first support member of the stabilizer frame and wherein the funnel-shaped side wall is formed to include a hinge-pin aperture receiving a portion of the hinge pin therein.

18. The stepladder of claim **17**, wherein the accessory mount further includes a mount plate formed to include a neck-receiving slot and a stand-off plate coupled to the funnel-shaped side wall and to the mount plate to separate the mount plate from the funnel-shaped side wall to define the base receptacle located between the mount plate and the funnel-shaped side wall, and the tool holder includes a carrier and a neck arranged to interconnect the base and the carrier and to lie in the neck-receiving slot formed in the mount plate when the base is located in the base receptacle to hold the carrier in a stationary position relative to the hinge-pin mount outside the base receptacle.

19. The stepladder of claim **9**, wherein the step frame further includes a mount rung associated with each step and arranged to extend between and interconnect the first and second legs of the step frame, each step is formed to include a rung receiver receiving therein an associated one of the mount rungs, and the step frame further includes retainer means coupled to each step for retaining the companion mount rung in the rung receiver formed in said step yet allowing pivoting movement of said step about a pivot axis established by the mount rung during movement of the stabilizer frame relative to the step frame between the expanded use position and the collapsed storage position, wherein the retainer means includes a strap arranged to trap a companion mount rung in an associated rung receiver and a fastener coupled to an associated strap and an associated step to retain the strap in a stationary position on the companion step.

* * * * *

PGR2026-00044
TRICAM EX1007