United States Patent [19]

Boothe

[11] **4,407,045**

[45] **Oct. 4, 1983**

[54] **LADDER HINGE AND MULTI-POSITION LOCKING MECHANISM THEREFOR**

[76] Inventor: **Leland H. Boothe,** 247 South 600 East, Alpine, Utah 84003

[21] Appl. No.: **333,229**

[22] Filed: **Dec. 21, 1981**

[51] **Int. Cl.**[3] **E05D 11/10;** F16C 11/10

[52] **U.S. Cl.** **16/327;** 16/329; 182/22; 182/163; 403/92

[58] **Field of Search** 16/327, 334, 387, 372, 16/329, 333, 326, 362, 353, 349; 182/207, 208, 209, 24, 25, 22–27, 104, 163, 165; 403/83, 92

[56] **References Cited**

U.S. PATENT DOCUMENTS

3,692,143	9/1972	Kummerlin	186/24
3,811,151	5/1974	Kummerlin	16/329
3,955,240	5/1976	Schuh et al.	182/163 X
4,025,109	5/1977	Klingelhofer	16/329 X
4,210,224	7/1980	Kummerlin et al.	184/207
4,216,844	8/1980	Klafs	16/329 X

Primary Examiner—Gil Weidenfeld
Assistant Examiner—John S. Brown

[57] **ABSTRACT**

An improved hinge for a collapsible ladder includes a pivot pin which has a sufficiently simple construction to permit it to be fabricated by die-casting on a cost-competitive basis. The simple construction is made possible by an improved axial detent arrangement for a shaft which rotates and slides within the hub and to which the hinge locking pins are secured. The detent arrangement includes a detent bore extending radially biased against the shaft. A suitable detent recess in the shaft is angularly aligned with the detent bore for each locking position of the shaft. Axial alignment of the bore and a recess is achieved by fully extending the shaft out of the hub against the restoring force of a bias spring in the hub. The recess and bias member are contoured to permit disengagement of the detent by rotation of the shaft but not by axially applied forces.

28 Claims, 9 Drawing Figures

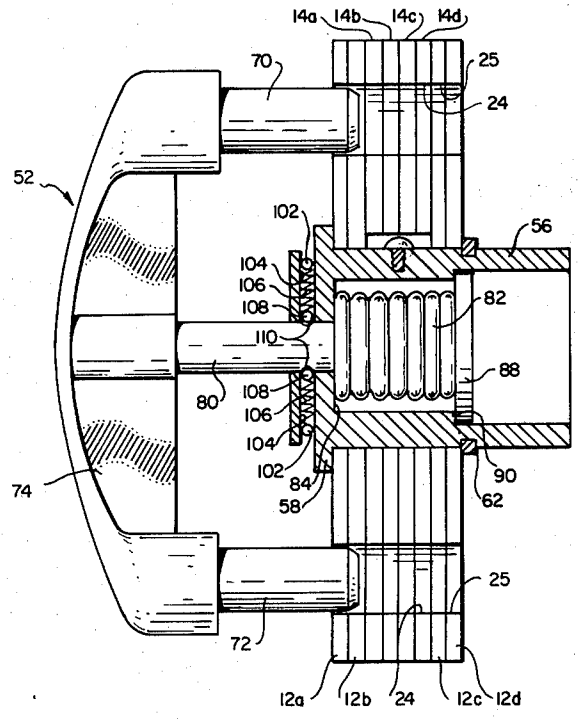

PGR2026-00044
TRICAM EX1010

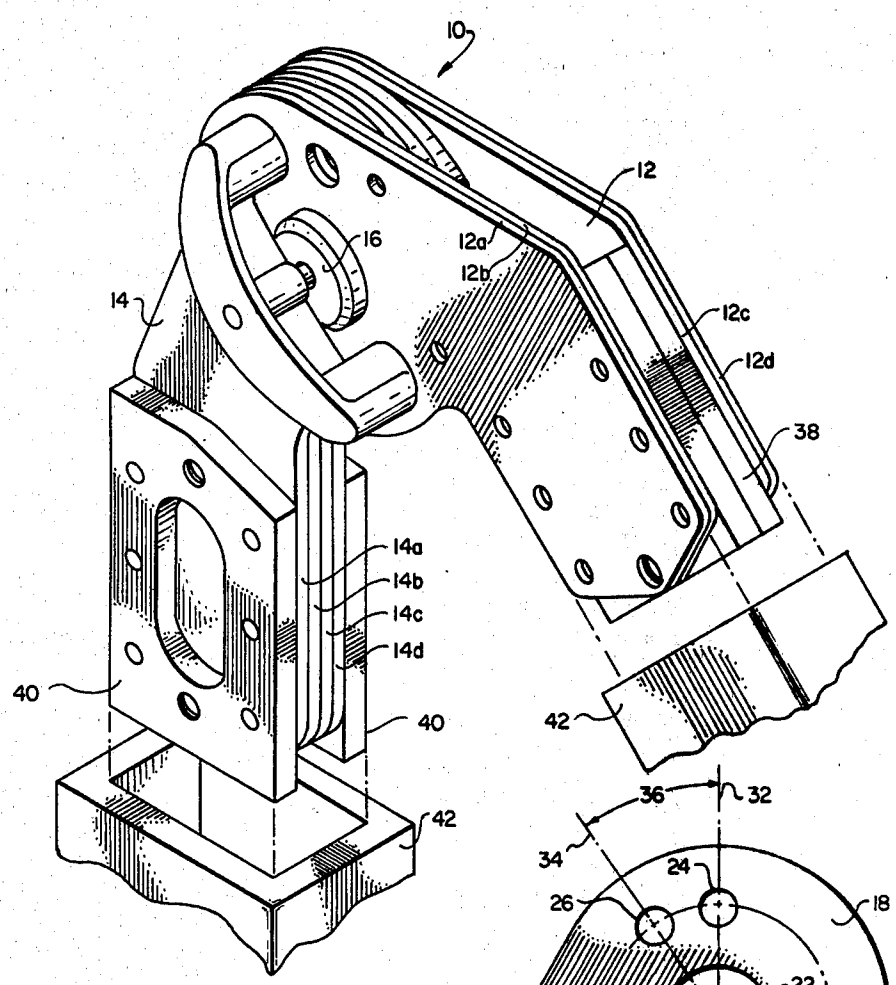

Fig. 1

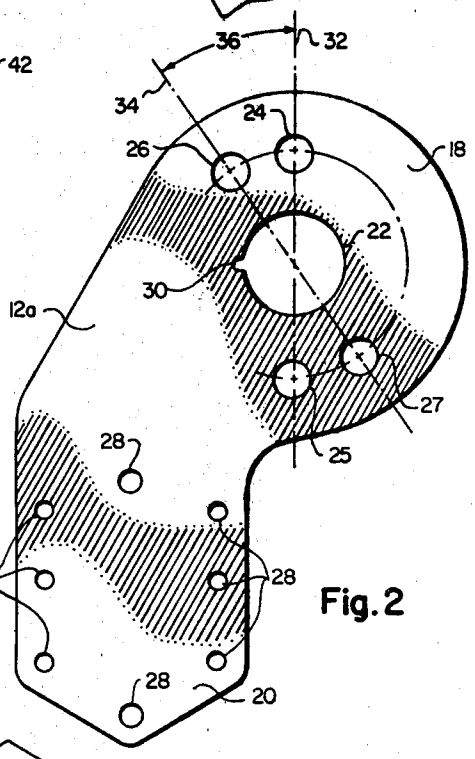

Fig. 2

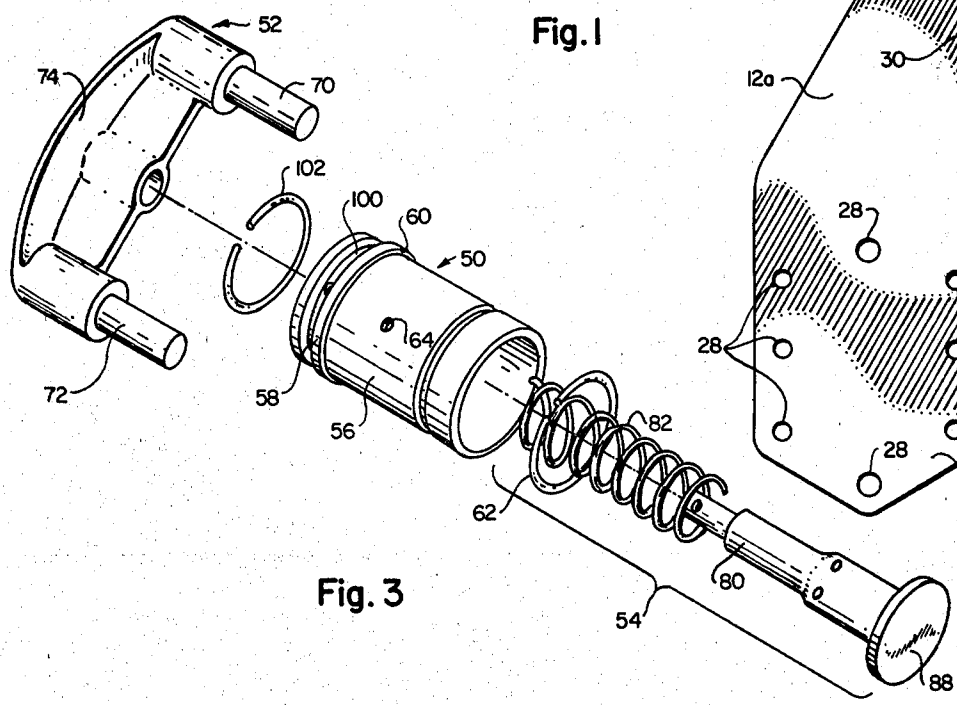

Fig. 3

PGR2026-00044
TRICAM EX1010

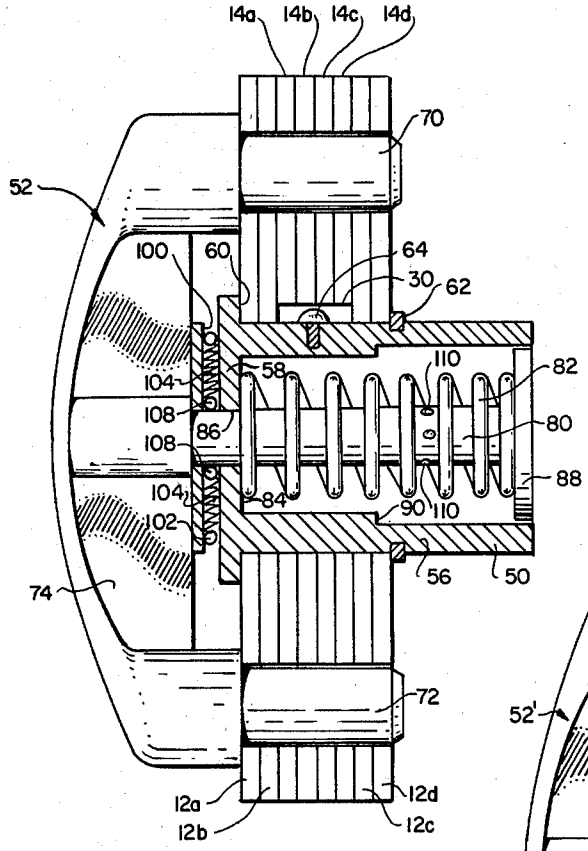

Fig. 4A

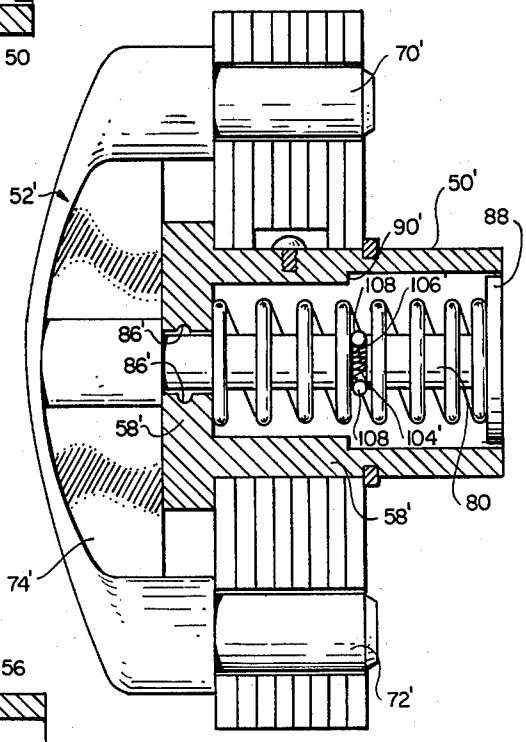

Fig. 5

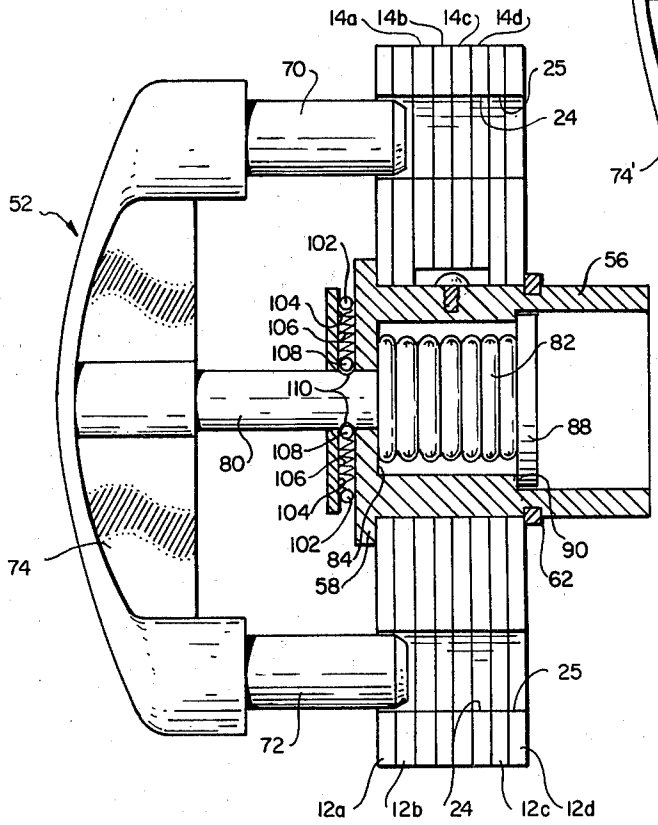

Fig. 4B

PGR2026-00044
TRICAM EX1010

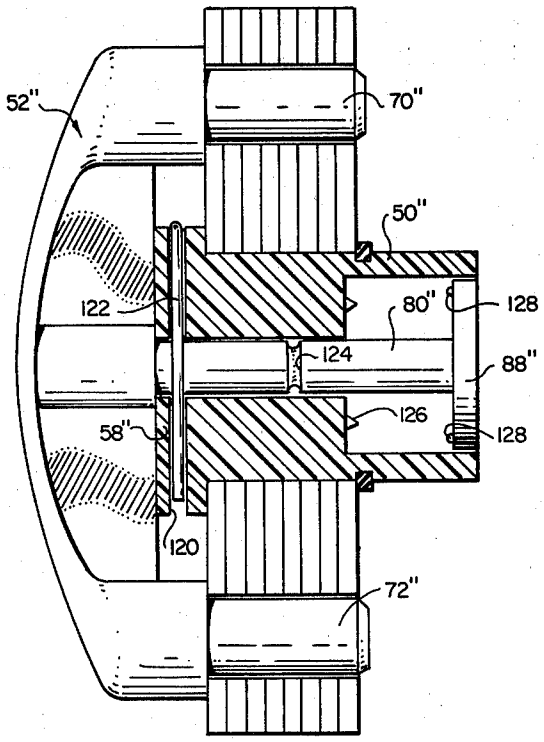

Fig. 6A
PRIOR ART

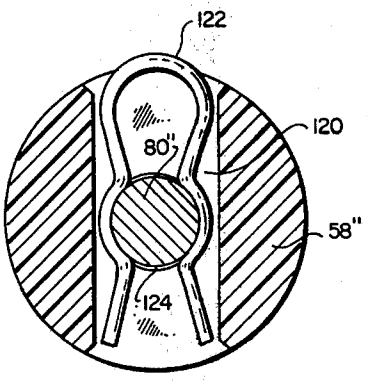

Fig. 7
PRIOR ART

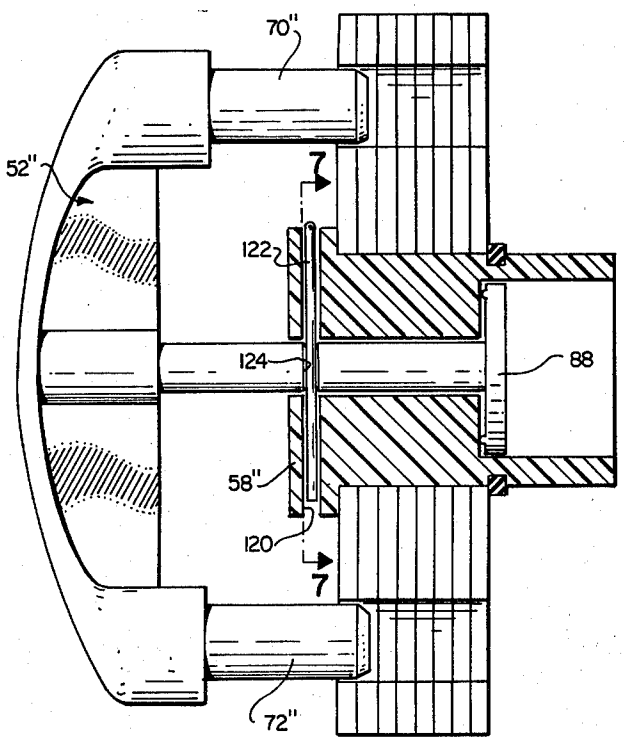

Fig. 6B
PRIOR ART

PGR2026-00044
TRICAM EX1010

LADDER HINGE AND MULTI-POSITION LOCKING MECHANISM THEREFOR

BACKGROUND OF THE INVENTION

1. Field of the Invention

The present invention relates to an improved ladder hinger and locking mechanism therefor, and more particularly to a ladder hinge that has a plurality of locking positions, is structurally sound and inexpensive to manufacture.

2. The Prior Art

Ladders are commonly used for a variety of applications and are of two general types. One type is a folding ladder, commonly called a step ladder, which is self-supporting. Step ladders are typically used for such tasks are pruning, painting ceilings, or other similar tasks where it may be impossible to lean the ladder against a structure for support. The other type of ladder which is well known is the straight extension ladder. This type of ladder is simply leaned against the wall or some other structure when standing or climbing on the ladder.

Ladders which are constructed to that they may be used as both step ladders and as straight extension ladders have long been known in the art. For example, see U.S. Pat. Nos. 594,303, 1,100,823 and 3,912,043. Typically, such ladders are constructed with hinges in the middle of the side rails. The hinges permit the ladder to be folded into a step ladder configuration or unfolded into a straight extension ladder configuration. Such ladders, commonly referred to as combination step and extension ladders, are very versatile and they combine the desirable features of both types of ladders.

However, combination step and extension ladders have historically presented problems with respect to the ladder hinge. Typically, the ladder hinge is provided with two sets of support plates. Each set of support plates is rigidly attached to a respective stringer of the ladder. The support plates rotate about a central hub so that the ladder may be folded into the step ladder configuration or may be unfolded into the extension ladder configuration. Furthermore, the ladder hinge comprises a locking mechanism for locking the ladder into the various configurations. In particular, prior art devices provide a locking mechanism having spring-biased locking pins which engage apertures provided in the support plates. To accommodate the springs for biasing the locking pins, the prior art devices are provided with a central hub having a tubular cross-section. Although the ladder hinge is structurally sound as long as the locking pins engage the support plates, it has been found that the structural integrity of the ladder hinge is greatly compromised when the locking pins are withdrawn from the support plates as hereinafter set forth.

With the locking pins withdrawn from the support plate apertures, forces applied to the ladder are focused at the tubular central hub which, alone, must bear the force. Initially, the tubular hub was fashioned out of a rigid, plastic material. However, experience has shown that the rigid, plastic hub was easily broken during the folding or unfolding of the ladder from one configuration to another if any resistance to the rotation of the support plates was encountered, or if any forces were placed on the ladder hinge directly.

In an effort to overcome the breakage problem, the rigid plastic hub was replaced with a malleable, plastic hub. If forces were applied to the malleable, plastic hub, the hub was simply deformed rather than broken. However, it was found that the malleable, plastic hub eventually became permanently deformed as a result of repeated folding and unfolding. Moreover, the friction between the hub and the support plates caused grooves to be formed in the hub which gave rise to a misalignment of the locking apertures of the individual support plates. Consequently, the locking pins were able to only partially engage the ladder hinge and, thus, presented a potential danger to the user. For example, with the locking pins only partially inserted, substantial forces placed on the ladder could cause mutual shearing between the support plates and collapse of the ladder.

It would be desirable to replace the plastic support hub found in the prior art with a metal support hub thereby alleviating the problems discussed above. However, due to the configuration of the support hub (as described in some detail hereinbelow in relation to FIGS. **6A**, **6B** and **7**), and due to the functional operation of the locking mechanism, it would be necessary to form the central hub by a die casting process if the hub were to be made of metal. When made out of plastic, the hub can be formed by injection molding or some other inexpensive plastic manufacturing process. However, it will be appreciated that substantial costs arise with the necessity of acquiring an expensive dye for metal die casting.

In an attempt to have the structural integrity of a metal hub and yet at the same time benefit from the relatively inexpensive plastic hub, a metal sleeve was placed about the exterior surface of the plastic hub at its support plate-engaging portion. However, this configuration did not prove to be a viable alternative. For example, it was found to be very difficult to rigidly secure the metal shank to the plastic hub and still allow for the proper operation of the locking mechanism. As a result, the metal shank often worked itself free from the support plates and the condition described above once again became a problem.

Another disadvantage of the prior art ladder hinge hub described above concerns the detent arrangement for holding the locking pins withdrawn until the pins are rotated relative to the hub away from the previous locked position. In the prior art device, as described below in relation to FIGS. **6A**, **6B** and **7**, the release mechanism for the detent arrangement tends to fail due to wear and tear. The result is that the locking pins are "frozen" in the withdrawn position and cannot be inserted into the support plate apertures. This prevents locking the ladder in any discrete position, making it unsafe for use.

Accordingly, what is needed is an improved ladder hinge which may be locked into a plurality of positions, which is inexpensive to manufacture and which is structurally sound. Such an invention is disclosed and claimed herein.

BRIEF SUMMARY AND OBJECTS OF THE INVENTION

In accordance with the present invention, an improved ladder hinge for a combination step and extension ladder comprises a metal hub which houses an improved detent arrangement. The resulting hinge has increased structural integrity while at the same time, it is readily manufacturable at a competitive cost.

In the preferred embodiment, the hub comprises a tubular metal housing through which one end of a rotat-

PGR2026-00044
TRICAM EX1010

able shaft projects to engage the locking pins handle. The shift is spring biased toward retraction within the hub, thereby biasing the locking pins toward their locking position in which they project through aligned holes in the hinge plates. At least one radially-extending bore is defined through said one end of the hub and contains a bias spring which urges a detent ball radially against the shaft. The shaft, in turn, includes plural truncated spherical recesses disposed at angularly spaced positions at a predetermined axial location of the shaft. The angular positions of the recesses correspond to angular locking positions of the locking pins so that for each locking position of the pins, a recess is angularly aligned with the detent bore. The axial position of the detent recesses is defined to provide axial alignment between the bore and the recesses when the shaft is withdrawn sufficiently, in opposition to its axial spring bias, to permit the distal ends of the locking pins to more than clear out of the hinge plates. The recess is contoured to permit the detent ball to disengage the recess when the shaft is rotated; however, the axial spring bias force cannot dislodge the detent ball from the recess in the axial direction. Thus, when the axially detented shaft is rotated from a locking position, the detent is removed. However, such rotation also mis-aligns the hinge plate locking apertures so that the distal ends of the biased locking pins retract slightly to bear against the surface of one of the hinge plates until locking aperture alignment is once again achieved. In this regard, it is important that the distal ends of the locking pins be axially spaced from the cleared hinge plate by a sufficient amount in the detented position to preclude detenting when the locking pins are rotated to their next locking position.

The simple hub construction, using a radial bore rather than a complex slot for detent, permits die casting in metal on a cost competitive basis.

It is therefore a primary object of the present invention to provide an improved ladder hinge with increased structural integrity.

It is a further object of the present invention to provide an improved ladder hinge which is designed for increased durability.

It is an even further object of the present invention to provide an improved ladder hinge that is inexpensive to manufacture.

These and other objects and features of the present invention will become more fully apparent from the following description and appended claims taken in conjunction with the accompanying drawings.

BRIEF DESCRIPTION OF THE DRAWINGS

FIG. **1** is a perspective view of a ladder hinge and locking mechanism of the present invention.

FIG. **2** is a plan view of one support plate of the ladder hinge of FIG. **1**.

FIG. **3** is an exploded perspective view of the locking mechanism of the present invention.

FIG. **4A** is a detailed side view in partial cross-section of the locking mechanism of the present invention in the locked position.

FIG. **4B** is a detailed side view impartial cross-section of the locking mechanism of the present invention in the unlocked position.

FIG. **5** is a detailed side view in partial cross-section of a second embodiment of the present invention shown in the locked position.

FIG. **6A** is a detailed side view in partial cross-section of a prior art locking mechanism shown in the locked position.

FIG. **6B** is a detailed side view in partial cross-section of a prior art locking mechanism of FIG. **6A** shown in the unlocked position.

FIG. **7** is a cross-sectional view taken along line **7—7** of FIG. **6B**.

DETAILED DESCRIPTION OF THE PREFERRED EMBODIMENT

Reference is now made to the figures wherein like parts are designated with like numerals throughout. With particular reference to FIG. **1**, the ladder hinge of the present invention is illustrated and generally designated by the numeral **10**. Ladder hinge **10** generally comprises two sets of interlocking support plates **12** and **14** and a locking mechanism **16**.

In the preferred embodiment, each set of support plates **12, 14** is made up of four individual support plates **12***a–d* and **14***a–d*, respectively. It will be appreciated, however, that any number of individual support plates could be used for support plate sets **12, 14**. The configuration of each support plate **12***a–d*, **14***a–d* is identical and will, therefore, be described with reference to plate **12***a*. Referring to FIG. **2**, support plate **12***a* has an essentially annular portion **18** and a stringer engaging portion **20** which extends generally tangentially outward from annular portion **18**. Support plate **12***a* is provided with a plurality of apertures: aperture **22** at the center of annular portion **18** for receiving a portion of locking mechanism **16** in mating relationship, four locking apertures **24–27** spaced at equal radial distances from aperture **22**, and apertures **28** located in stringer engaging portion **20** for rigidly securing ladder hinge **10** to the stringers of a ladder. Plate **12***a* is also provided with locating notch **30** in aperture **22** which assures proper orientation of support plate **12***a* with respect to locking mechanism **16**. As further illustrated in FIG. **2**, locking apertures **24, 25** lie on the same diammetric axis **32** of annular portion **18** on opposite sides of aperture **22**. Similarly, locking apertures **26, 27** lie on diammetric axis **34**. Apertures **24–27** are radially spaced apart in the presently preferred embodiment such that the angle **36** between axes **32** and **34** is approximately thirty-five degrees.

Referring to FIG. **1**, plates **12** and **14** engage one another in interlocking relationship. A pair of spacers **38** is interposed between the stringer engaging portion **20** of plates **12***b* and **12***c* so as to provide a space between the annualar portion **18** of plates **12***b* and **12***c* for receiving the annular portion of plates **14** therebetween. To reduce wear on plates **12** and **14**, replaceable inserts (not shown) are placed between plates **12***b* and **14***a* and between plates **12***c* and **14***d*. Accordingly, the width of spacers **38** should generally correspond to the widths of plates **14** *a–d* plus the width necessary for the replaceable inserts. A second pair of spacers **40** is attached to the stringer engaging portion **20** of plates **14***a* and **14***d* so that the stringer engaging portions **20**, of both sets of plates **12** and **14**, along with spacers **38** and **40** have essentially the same overall dimensions. As further illustrated in FIG. **1**, the stringer engaging portions **20** of plates **12, 14** in combination with spacers **38, 40** are dimensionally configurated so as to engage tubular stringer portions **42**, whereby ladder hinge **10** may be ridigly secured to ladder stringers.

PGR2026-00044
TRICAM EX1010

As will be hereinafter more fully described, plates **12** and **14** can be rotated relative to one another about aperture **22**. As plates **12, 14** are rotated relative to one another, it will be appreciated that at least one pair of locking apertures **24–27** of plates **14** come into exact alignment with at least one pair of the locking apertures **24–27** of plates **12** at a plurality of positions which correspond to the various ladder configurations (e.g. folded for storage, folded for step ladder, or unfolded for extension ladder).

Referring to FIGS. **3, 4A** and **4B**, locking mechanism **16** includes essentially three components: central hub **50**, locking handle **52** and biasing member **54**. Hub **50** is preferably machine tooled from a suitable grade of tool steel and includes a portion **56** of generally tubular cross-section with an annular ring portion **58** integrally attached thereto at one end. Tubular portion **56** is dimensionally configurated to engage aperture **22** of plates **12, 14** in mating relationship, and ring portion **58** presents a diametrally enlarged flange **60** which cooperates with split ring **62** to axially position hub **50** with respect to plates **12, 14**. Hub **50** is also provided with a locating pin **64** which engages locating notch **30** of plates **12, 14**. As will be hereinafter more fully described, locating pin **64** engages plates **12** and **14** in such a way that plates **14** are fixed relative to hub **50** while plates **12** are free to rotate thereabout.

Locking mechanism **16** is provided with locking handle **52** for locking plates **12** and **14** into a fixed position relative to one another. Locking handle **52** has a pair of locking pins **70, 72** which are dimensionally configurated to engage locking apertures **24–27** in mating relationship. Integrally attached to the proximal ends of locking pins **70, 72** is a handle portion **74** provided for ease in manipulating locking pins **70, 72**. Locking pins **70, 72** are biased so as to engage plates **12, 14** whenever plates **12** and **14** are rotated to a position relative to one another such that at least one pair of locking apertures **24–27** in each set of plates **12, 14** are aligned with locking pins **70, 72**.

Rigidly connected to locking handle **52** is an elongated shaft member **80** which extends a diametrically reduced aperture **86** in annular ring portion **58** and terminates in an enlarged disc portion **88** within tubular portion **56**. A bias spring **82** is situated within tubular portion **56** and is positioned between disc portion **88** and the interior shoulder **84** of annular ring portion **58** so as to exert a force against disc **88** thereby biasing elongated shaft member **80** and locking handle **52** to the right as viewed in FIGS. **4A** and **4B**. Due to the bias of spring **80**, the normal position of locking handle **52** and elongated shaft member **80** is as illustrated in FIG. **4A**.

Locking mechanism **16** can be inserted into the apertures provided in locking plates **12** and **14** by, first, rotating plates **12** and **14** to a position wherein the locating notches **30** (FIG. **2**) are aligned. Locating notches **30** are positioned in plates **12, 14** such that, when notches **30** are aligned, locking apertures **24** and **25** of plates **12** are aligned with locking apertures **25** and **24**, respectively, of plates **14**. After aligning locating pin **64** with notches **30** and aligning locking pins **70, 72** with the aligned locking apertures **24–27**, locking mechanism **16** is inserted into plates **12** and **14** and split ring **62** is placed around hub **50** as illustrated in FIG. **4**, to hold plates **12** and **14** in position between split ring **62** and annular ring portion **58**. With plates **12** and **14** coupled to locking mechanism **16**, ladder hinge **10** comprises a unitary assembly that can be rigidly fastened to the stringers of a combination step and extension ladder as described previously.

With further reference to FIGS. **4A** and **4B**, plates **12** and **14** are locked into a fixed rotative or angular position relative to one another so long as pins **70** and **72** engage the aligned apertures **24–27** as illustrated in FIG. **4A**. As discussed above, spring **82** biases the locking pins **70, 72** so that they normally engage plates **12** and **14**. Rotation of plates **12** and **14** from one position to another may be effectuated, however, by grasping handle **74** and withdrawing pins **70** and **72** from locking apertures **24–27** of plates **14** as illustrated in FIG. **4B**. After rotating plates **12** and **14** relative to one another an incremental distance from the previous position, the locking handle **52** can be released as the locking apertures **24–27** of plates **12** and **14** are no longer aligned and the bias of spring **82** simply forces the distal ends of pins **70** and **72** into abutting engagement with the surface of plate **14***a*.

As further illustrated in FIG. **4B**, the extent to which locking pins **70** and **72** can be withdrawn from locking apertures **24–27** is limited by shoulder **90**. Shoulder **90** is provided in hub **50** to limit the axial movement of disc portion **88** and is positioned so that pins **70** and **72** can be withdrawn from the locking apertures **24–27** in plates **12***c, d* and **14***a–d*, but may continue to extend into the locking apertures of plates **12***a* and **12***b*. It is important that when disc portion **88** abuts shoulder **90**, so that locking pins **70, 72**, are fully withdrawn, the distal ends of the locking pins are retracted somewhat beyond the plane of the surface of plate **14***a* which faces plate **12***b*. When the plates are then mutually rotated to mis-align the apertures **24–27**, spring **82** forces pins **70, 72** to move slightly before the distal ends of the pins can contact plate **14***a*. The importance of this spacing is described in detail below with respect to the detent mechanism. Furthermore, hub **50** is constrained to rotate along with plates **14** due to the fact that locating pin **64** is situated approximately half-way between annular ring portion **58** and split ring **62** and engages the notches **30** in plates **14***b* and *c*. Accordingly, the ladder hinge **10** consists of two assemblies which are engaged in counter-rotation relative to one another as the configuration of ladder hinge **10** is altered.

As described above, due to the spring bias on locking handle **52**, it is necessary to axially detent locking pins **70** and **72** in the withdrawn position while plates **12** and **14** are rotated an incremental distance from the previous position. Otherwise, pins **70** and **72** would simply "snap" back into the aligned locking apertures thereby locking the ladder hinge **10** in the position from which it was desired to move. Although locking handle **52** could be retained in its withdrawn or extended position manually, while at the same time rotating plates **12** and **14**, it will be appreciated that such a task would be extremely difficult if it were necessary to manipulate a pair of ladder hinges and a pair of ladder sections all at the same time, as would be required with a combination step and extension ladder. Accordingly, the ladder hinge **10** of the present invention is provided with an axial detent mechanism for automatically retaining the locking handle **52** and locking pins **70, 72** in the withdrawn position while the ladder hinge **10** is rotated an incremental distance from a previously locked position.

Referring further to FIG. **3, 4A** and **4B**, hub **50** is also provided with a second annular recess **100** about the exterior surface of annular ring portion **58**, which recess receives a second split ring **102**. A through-bore **104**

PGR2026-00044
TRICAM EX1010

extends diametrically through annular ring portion **58** at recess **100** and communicates from one side of annular recess **100** to the other through reduced aperture **86**. Situated within opposite radial legs of through-bore **104** are a pair of compression springs **106** and a respective pair of detent ball bearings **108** which are retained in bore **104** by split ring **102**. As illustrated in FIG. **4A**, springs **106** exert a force on ball bearings **108**, causing them to engage the shank of shaft **80** in abutting relationship. As further illustrated in FIG. **4A**, shaft **80** is provided with a plurality of radially spaced partially spherical recesses **110** positioned on the shank thereof. Shaft **80** is preferably provided with a total of four recesses **110**, the angular spacing of which corresponds to the angular spacing of locking apertures **24–27** of plates **12**,**14**. Through-bore **104** and recesses **110** are strategically positioned on hub **50** and shaft **80**, respectively, such that the recesses are axially aligned with bore **104** when locking pins **70**, **72** are in their fully withdrawn or extended position illustrated in FIG. **4B**. This position is defined by disc **88** abutting shoulder **90**. In addition, one pair of recesses **110** is angularly aligned with through-bore **104** whenever the ladder hinge **10** is in a locked position (i.e. a pair of locking apertures in plates **14** is aligned with a pair of locking apertures in plates **12**). The axial location of recesses **110** along shaft **80** is chosen such that when the shaft and locking pins **70**, **72** are fully extended, and recesses **110** are aligned with bore **104**, the distal ends of pins **70**, **72** are withdrawn some distance beyond plate **14***a*.

To rotate ladder hinge **10** from one locked position to another, pins **70** and **72** are withdrawn from the aligned locking apertures **24–27** thereby translating shaft member **80** axially or longitudinally until the angularly aligned recesses **110** some into direct axial alignment with through-hole **104** as illustrated in FIG. **4B**. At this point, detent balls **108** are forced into the new angularly and axially aligned recesses **110** by the force of springs **106**. The force of springs **106**, in combination with the forces which the walls of through-bore **104** exert on detent balls **108** in recesses **110** is sufficient to enable detent balls **108** to retain locking handle **52** in the withdrawn position against the restoring force of spring **82**. Locking pins **70** and **72** will be retained in the withdrawn position (see FIG. **4B**) until plates **12** and **14** are rotated an incremental angular distance from the previously locked position as hereinafter set forth.

As described above, hub **50** and shaft **80** rotate in opposite directions when ladder hinge **10** is moved from one configuration to another since hub **50** must rotate in tandem with plates **14** and shaft member **80** is constrained to rotate with plates **12**. Due to the counter-rotation of hub **50** and shaft **80**, ball bearings **108** are forced out of the aligned recesses **110** by the curvature thereof as plates **12** and **14** are rotated an incremental distance from the previously locked angular position. As soon as ball bearings **108** are forced out of the aligned recesses **110**, which is concurrent with misalignment of locking apertures **24–27**, the distal ends of locking pins **70**, **72** are urged axially against plate **14***a* in abutting relationship by the force of bias spring **82**. Locking pins **70**, **72** continue to engage plate **14***a* in abutting relationship until further rotation of plates **14** relative to plates **12** allows another pair of locking apertures **24–27** in plates **14** to come into alignment with the locking pins. At that time, the locking pins are urged through the aligned locking apertures to assume the locked position illustrated in FIG. **4A**.

It should be noted that withdrawn locking pins **70**, **72** are immediately forced into their retracted position when plates **12**, **14** are mutually rotated to provide alignment between locking apertures **24–27**. In this regard, it is important that shaft **80** not be axially detented in the new locking position before the shaft can be retracted by spring **82**. In the preferred embodiment this is achieved by moving the shaft **80** and pins **70**, **72** axially a small amount once the detent is disengaged. Specifically, in the axial detent position of shaft **80**, the distal ends of locking pins **70**, **72** are withdrawn a small distance beyond the plane of the surface of plate **14***a* which faces plate **12***b*. If the plates are then mutually rotated, thereby disengaging the detent while misaligning locking apertures **24–27**, locking pins **70**, **72** are biased forward through the locking apertures in plates **12***a* and **12***b* until the distal ends of the locking pins abut plate **14***a*. Continued mutual rotation of the plates to the new locking position is achieved with recesses **110** axially displaced from bore **104** by the small distance moved by pins **70**, **72** after disengagement of the detent. This axial misalignment precludes ball **108** from entering a recess **110** at the new angular locking position and permits the pins **70**, **72** to be quickly forced through the aligned locking apertures at that position by the action of spring **82**.

Although the detent arrangement has been described in terms of a diametrically extending bore **104**, one or more radially-extending bores, with suitable provided recesses **110**, may be employed within the scope of the invention.

An alternative embodiment is illustrated in FIG. **5**. The embodiment of FIG. **5** differs from that of FIG. **4** only in that a through-bore **104'** is provided in elongated member **80**, and recesses **110'** are radially spaced about the reduced aperture **86'** of annular ring portion **58'**. A pair of detent balls **108'** and spring **106'** are positioned in through-bore **104'**. Through-bore **104'** is crimped in at least one point around the edge thereof to retain balls **108'** from escaping from through-bore **104'**, while at the same time, allowing balls **108'** to protrude from through-bore **104'** a sufficient distance so as to engage recesses **110'** in the withdrawn fully extended position of locking pins **70**, **72**.

It will be appreciated that both of the above-described embodiments of the present invention represent a ladder hinge that is versatile and structurally safe. Hub **50** (or **50'**) in each case is easily machine-tooled from suitable grade of tool steel. Accordingly, hub **50** provides ample support, regardless of whether hinge **10** is in the locked or withdrawn position, to support forces encountered under normal use and, further, to provide a ladder hinge with an extended, if not indefinite lifetime. Further distinct advantages and features of the present invention may be appreciated by comparing the present invention to a typical prior art device illustrated in FIGS. **6A**, **6B** and **7**.

Hub **50''** is typically made of a malleable plastic material through a suitable process of injection molding. The disadvantages of a plastic hub are discussed hereinabove. Hub **50''** has a slot **120** through annular ring portion **58''** for receiving a spring pin **122**. Spring pin **122** engages an annular recess **124** provided in shaft **80''** for the purpose of retaining the locking handle **52''** in the withdrawn position as illustrated in FIG. **6B**. A bias spring, corresponding to spring **82** of FIGS. **4A** and **4B**, is omitted in FIGS. **6A** and **6B** to preserve clarity and facilitate understanding the operation. To overcome the

PGR2026-00044
TRICAM EX1010

previously discussed disadvantages of the plastic hub, hub **50″** could be made out of metal. However, the presence of slot **120** would make it necessary to fabricate hub **50″** with a relatively expensive die-casting operation which would result in a product that could not be competitively priced.

Additionally, prior art hub **50″** is provided with axially-extending and angularly-spaced plastic protrusions **126** which selectively engage opposed axially-extending and similarly angularly spaced metal protrusions **128** provided on disc **88″**. When plates **12** and **14** are rotated relative to one another, protrusions **126** and **128** are brought into engagement to release locked shaft **80″** from the restraining force of spring pin **122**. Specifically, the protrusions extend a sufficient axial distance so that when they are engaged they force recess **124** out of engagement with spring pin **122**, thereby breaking the axial detent and permitting spring **82″** to retract locking pins **70**, **72** when the locking apertures are next aligned. Over a period of time, it is not uncommon for plastic protrusions **126** to wear down a sufficient amount, or even break off, such that protrusions **126** and **128** are not large enough to release shaft **80″** from the restraining force of spring pin **122**. Accordingly, the locking pins are retained in the withdrawn position until some other method of releasing the elongated member **80″** from the restraining force of pin **122** can be effected, and the ladder hinge is thereby rendered useless since it cannot be locked in a fixed position.

Therefore, it is clear that the present invention has two important and advantageous features when compared to the prior art. First, hub **50** is readily fabricated from metal using a relatively inexpensive die-casting process. Second, the detect arrangement, whereby springs **106** in bore **104** urge ball bearing **108** into recesses **110**, is more reliable than the prior art arrangement involving recess **124** cooperating with spring pin **122** in slot **120** and released by projections **126** and **128**. In addition, the simpler hub structure resulting from tnis detent arrangement permits the inexpensive die-casting process to be used.

It will be understood that, although the use of plural plates **12***a–d* and **14***a–d* have certain advantages of manufacture, the use of plural plates is not a crucial feature of the present invention. For example plates **12***a* and *b* may be made as one member, as could plates **12***c* and *d* and, likewise, plates **14***a–d*. Moreover, plates **12***a–d* may comprise a single member which is bifurcated to receive the corresponding portions of a single member **14***a–d*.

It should also be noted that, although the use of two diametrically oriented locking pins **70**, **72** is advantageous, any number of such pins may be employed, including only one pin. Of course, the locking apertures **24–27** have to be provided accordingly. Where three or more locking pins are employed, locking apertures may have to be spaced at different radial distances.

Further, it should be noted that detent ball **108** and recess **110** of partially matching contour are advantageous in that they prevent axial movement of shaft **80** by spring **82** while permitting rotation of the shaft to disengage the detent mechanism. This rotational disengagement is possible because the curvature of shaft **80** has the effect of lowering the lip of the recess **110** along the sides so that detent ball **108** can be forced out of the recess upon angular displacement between shaft **80** and hub member **56**. However, other configurations of detent members and recesses are possible to achieve the same result. For example, recess **110** can be a slot of V-shaped transverse cross-section adapted to receive a detent member in the form of a matching flat arrow-head. The taper of the arrow-head detent member permits disengagement upon rotation; however, the flat parallel surfaces of the arrow-head preclude detent disengagement by axial movement of shaft **80**.

While specific embodiments of the invention have been described and illustrated, it will be clear that variations of the details of construction which are specifically illustrated and described may be resorted to without departing from the true spirit and scope of the invention as defined in the appended claims.

What is claimed and desired to be secured by Letters Patent is:

1. An improved hinge for collapsible ladders, said hinge being of the type wherein first and second members each have a head portion and a ladder stringer-engaging portion, the first and second members being pivotally engaged for rotation about a pivot axis extending generally perpendicularly through said head portions and having respective first locking apertures which are radially spaced from the pivot axis and can be selectively aligned and mis-aligned by mutual rotation of said first and second member about the pivot axis, and at least one locking pin which is selectively translated through the locking apertures, when aligned, from an unlocked to a locked position thereby preventing mutual rotation of the first and second members, the improved hinge further comprising:

a hub member having a longitudinal axis corresponding to the pivot axis and having a guide aperture defined therein about the longitudinal axis;

a guide shaft disposed in the hub member for both axially slidable translation between extended and retracted positions along the longitudinal axis through the guide aperture and rotation about the longitudinal axis;

a handle member securing together the guide shaft and a proximal end of the locking pin such that a distal end of the locking pin is translatable through the locking apertures when aligned;

bias means for applying an axial bias force to the guide shaft to urge the guide shaft toward the retracted position;

axial detent means responsive to the guide shaft being moved to its extended position for maintaining the guide shaft in the extended position in opposition to the bias force while permitting rotation of the guide shaft, the detent means comprising:

a first detent bore defined through one of said hub member and said guide shaft and at least a first detent recess defined in the other of said hub member and said guide shaft such that said first detent bore and first recess are axially aligned when the guide shaft is in the extended position and are angularly aligned when the locking apertures in said first and second members are aligned;

a first detent member disposed in the first detent bore and having a projecting portion configured to match the first detent recess; and

first means disposed in the first detent bore for urging the projecting portion of the said first detent member radially toward the first detent recess; and

wherein the distal end of the locking pin is spaced from at least the first member in the extended position of the guide shaft and is snapped into abutment with the first member through the locking aperture in the

PGR2026-00044
TRICAM EX1010

second member upon disengagement of the detent means by rotation of the shaft.

2. A hinge as defined in claim 1 wherein said first detent bore is defined radially through the hub member at a location proximate an end wall of said hub member, and wherein said first detent recess is defined in said guide shaft.

3. A hinge as defined in claim 2, said axial detent means further comprising:

a second detent bore extending radially from said end wall of the hub member to said guide aperture;

a second detent recess having a predetermined configuration defined in the guide shaft such that said second detent recess and second detent bore are axially aligned when the guide shaft is in the extended position and are angularly aligned when the locking apertures in the first and second members are aligned;

a second detent member disposed in the second detent bore and having a projecting portion configured to match the predetermined configuration of said second detent recess; and

second means disposed in the second detent bore for urging the projecting portion of the second detent member radially toward the guide shaft.

4. A hinge as defined in claim 3 wherein said first and second detent bores are diametrically aligned with respect to said longitudinal axis, and wherein said first and second detent recesses are diametrically aligned with respect to said longitudinal axis.

5. A hinge as defined in claim 2, wherein said first detent member is spherical in shape and wherein said first detent recess is configured as part of a sphere to receive the projecting portion of said spherical first detent member.

6. A hinge as defined in claim 1 wherein said one locking pin is selectively translated axially and parallel to said pivot axis through the locking apertures and said one locking pin extends parallel to the guide shaft at a radial spacing from the longitudinal axis which corresponds to the radial spacing of said locking apertures from said pivot axis.

7. A hinge as defined in claim 6, further comprising:

a second locking pin having a proximal end secured to the handle and a distal end, said second locking pin extending parallel to said one locking pin and radially spaced from the pivot axis; and

second locking apertures defined through the annular portions of each of the first and second members at the same radial spacing from the pivot axis as the locking apertures being angularly aligned with one another and with the second locking pin when the first locking apertures are aligned.

8. A hinge as defined in claim 2 wherein said one locking pin is selectively translated axially and parallel to said pivot axis through the locking apertures and said one locking pin extends parallel to the guide shaft at a radial spacing from the longitudinal axis which corresponds to the radial spacing of said locking apertures from said pivot axis.

9. A hinge as defined in claim 8 wherein said one locking pin is selectively translated axially and parallel to said pivot axis through the locking apertures and said one locking pin extends parallel to the guide shaft at a radial spacing from the longitudinal axis which corresponds to the radial spacing of said locking apertures from said pivot axis.

10. A hinge as defined in claim 2, wherein the hub member has an interior cylindrical wall in the form of two end-to-end sections of different diameter and extending in opposite longitudinal directions from an annular stop shoulder which faces away from said end wall, and wherein the hinge further comprises a stop member secured to an end of the guide shaft remote from the handle member and disposed within the cylindrical hub section remote from the end wall, said stop member having a dimension transverse to said longitudinal axis which is greater than the diameter of said annular stop shoulder so that the extended position of the guide shaft is defined when the stop member and stop shoulder are in abutting relation.

11. A hinge as defined in claim 10 wherein said bias means comprises a compression spring helically wound about the guide shaft in the hub member between the stop member and the end wall.

12. A hinge as defined in claim 1 wherein said first detent bore is defined radially through an end wall of the hub member, wherein said first detent recess is defined in the guide shaft, and wherein said end wall includes a generally annular channel defined therein, said first detent bore extending from the generally annular channel to the guide aperture, said hinge further comprising locking means resiliently engaged in said annular channel for retaining the first detent member and first urging means in the first detent bore.

13. A hinge as defined in claim 12, said axial detent means further comprising:

a second detent bore extending radially from the annular channel to the guide aperture;

a second detent recess having a predetermined configuration defined in the guide shaft such that said second detent recess and second detent bore are axially aligned when the guide shaft is in the extended position and are angularly aligned when the locking apertures in the first and second members are aligned;

a second detent member disposed in the second detent bore and having a projecting portion configured to match the predetermined configuration of said second detent recess; and

second means disposed in the second detent bore for urging the projecting portion of the second detent member radially toward the guide shaft.

14. A hinge as defined in claim 13 wherein said first and second detent bores are diametrically aligned with respect to said longitudinal axis, and wherein said first and second detent recesses are diametrically aligned with respect to said longitudinal axis.

15. A hinge as defined in claim 13, wherein said first detent member is spherical in shape and wherein said first detent recess is configured as part of a sphere to receive the projecting portion of said spherical first detent member.

16. A hinge as defined in claim 13 wherein said one locking pin is selectively translated axially and parallel to said pivot axis through the locking apertures and said one locking pin extends parallel to the guide shaft at a radial spacing from the longitudinal axis which corresponds to the radial spacing of said locking apertures from said pivot axis.

17. A hinge as defined in claim 16, further comprising:

a second locking pin having a proximal end secured to the handle and a distal end, said second locking pin extending parallel to said one locking pin and radially spaced from the pivot axis; and

second locking apertures defined through the annular portions of each of the first and second members at

the same radial spacing from the pivot axis as the locking apertures being angularly aligned with one another and with the second locking pin when the first locking apertures are aligned.

18. A hinge as defined in claim **13**, wherein the hub member has an interior cylindrical wall in the form of two end-to-end sections of different diameter and extending in opposite longitudinal directions from an annular stop shoulder which faces away from said end wall, and wherein the hinge further comprises a stop member secured to an end of the guide shaft remote from the handle member and disposed within the cylindrical hub section remote from the end wall, said stop member having a dimension transverse to said longitudinal axis which is greater than the diameter of said annular stop shoulder so that the extended position of the guide shaft is defined when the stop member and stop shoulder are in abutting relation.

19. A hinge as defined in claim **18** wherein said bias means comprises a compression spring helically wound about said guide shaft in said hub member between said stop member and said at least one end wall.

20. A hinge as defined in claim **1** wherein said first detent bore is defined in the guide shaft and the first detent recess is defined as a recess projecting radially into an end wall of the hub member proximate the guide aperture.

21. A hinge as defined in claim **20** wherein said first detent bore extends diametrically through the guide shaft and includes a second detent member configured similarly to the first detent member, wherein said first urging means is disposed in the first detent bore to urge said first and second detent members in opposite radial directions through opposite ends of the bore, and further comprising a second detent recess configured similarly to the first detent recess and defined to project radially into said end wall proximate the guide aperture diametrically across the guide aperture from the first detent recess.

22. A hinge as defined in claim **20** wherein said first detent member is spherical in shape and wherein said first detent recess is configured as part of a sphere to receive the projecting portion of said spherical first detent member.

23. A hinge as defined in claim **20** wherein said locking pin is selectively translated axially and parallel to said pivot axis through the locking apertures and said one locking pin extends parallel to the guide shaft at a radial spacing from the longitudinal axis which corresponds to the radial spacing of said locking apertures from said pivot axis.

24. A hinge as defined in claim **23**, further comprising:

a second locking pin having a proximal end secured to the handle and a distal end, said second locking pin extending parallel to said one locking pin and radially spaced from the pivot axis; and

second locking apertures defined through the annular portions of each of the first and second members at the same radial spacing from the pivot axis as the locking apertures being angularly aligned with one another and with the second locking pin when the first locking apertures are aligned.

25. A hinge as defined in claim **23**, wherein said hub member has an interior cylindrical wall in the form of two end-to-end sections of different diameter and extending in opposite longitudinal directions from an annular stop shoulder which faces away from said end wall, and wherein the hinge further comprises a stop member secured to an end of the guide shaft remote from the handle member and disposed within the cylindrical hub section remote from the end wall, said stop member having a dimension transverse to said longitudinal axis which is greater than the diameter of said annular stop shoulder so that the extended position of the guide shaft is defined when the stop member and stop shoulder are in abutting relation.

26. A hinge as defined in claim **25** wherein said bias means comprises a compression spring helically wound about the guide shaft in the hub member between the stop member and the end wall.

27. A hinge as defined in claim **1**, wherein said hub member has an interior cylindrical wall in the form of two end-to-end sections of different diameter and extending in opposite longitudinal directions from an annular stop shoulder which faces away from an end wall of the hub member, and wherein the hinge further comprises a stop member secured to an end of the guide shaft remote from the handle member and disposed within the cylindrical hub section remote from the end wall, said stop member having a dimension transverse to said longitudinal axis which is greater than the diameter of said annular stop shoulder so that the extended position of the guide shaft is defined when the stop member and stop shoulder are in abutting relation.

28. A hinge as defined in claim **27** wherein said bias means comprises a compression spring helically wound about the guide shaft in the hub member between the stop member and the end wall.

* * * * *

PGR2026-00044
TRICAM EX1010

UNITED STATES PATENT AND TRADEMARK OFFICE

CERTIFICATE OF CORRECTION

PATENT NO. : 4,407,045

DATED : October 4, 1983

INVENTOR(S) : Leland H. Boothe

It is certified that error appears in the above—identified patent and that said Letters Patent is hereby corrected as shown below:

Title page, in the title, please insert --AN IMPROVED-- before "LADDER"

Column 1, line 8, "hinger" should be --hinge--

Column 1, line 24, "to" should be --so--

Column 2, line 26, "dye" should be --die--

Column 3, line 2, "shift" should be --shaft--

Column 3, line 26, "mis-aligns" should be --misaligns--

Column 3, line 63, "impartial" should be --in partial--

Column 4, lines 41 and 43, "diammetric" should be --diametric--

Column 4, line 52, "annualar" should be --annular--

Column 4, line 68, "ridigly" should be --rigidly--

UNITED STATES PATENT AND TRADEMARK OFFICE

CERTIFICATE OF CORRECTION

PATENT NO. : 4,407,045

DATED : October 4, 1983

INVENTOR(S) : Leland H. Boothe

It is certified that error appears in the above—identified patent and that said Letters Patent is hereby corrected as shown below:

Column 7, line 36, "through-hole" should be --through-bore--

Column 8, line 35, "110'" should be --86'--

Column 8, line 36, delete "86'"

Column 8, line 43, "110'" should be --86'--

Column 9, line 39, "tnis" should be --this--

Column 10, line 23, "mis-aligned" should be --misaligned--

Signed and Sealed this

Sixteenth Day of *April 1985*

[SEAL]

Attest:

DONALD J. QUIGG

Attesting Officer *Acting Commissioner of Patents and Trademarks*