US005610756A

United States Patent [19]

Lynam et al.

[11] **Patent Number: 5,610,756**

[45] **Date of Patent: Mar. 11, 1997**

[54] **ELECTROCHROMIC MIRROR FOR VEHICLES**

[75] Inventors: **Niall R. Lynam**; **Desmond J. O'Farrell**, both of Holland; **Kenneth L. Schierbeek**, Zeeland; **Michael A. Hansen**, West Olive, all of Mich.

[73] Assignee: **Donnelly Corporation**, Holland, Mich.

[21] Appl. No.: **442,956**

[22] Filed: **May 17, 1995**

Related U.S. Application Data

[63] Continuation of Ser. No. 971,676, Nov. 4, 1992, Pat. No. 5,446,576, which is a continuation of Ser. No. 643,186, Jan. 18, 1991, abandoned, which is a continuation-in-part of Ser. No. 618,169, Nov. 26, 1990, Pat. No. 5,151,824.

[51] **Int. Cl.**[6] **G02F 1/153**

[52] **U.S. Cl.** **359/267**

[58] **Field of Search** 359/267

[56] **References Cited**

U.S. PATENT DOCUMENTS

3,686,473	8/1972	Shirn et al.	359/512
3,790,748	2/1974	Van Laethem et al.	219/219
3,840,292	10/1974	Griffin et al.	359/604
3,862,798	1/1975	Hopkins	359/85
3,934,111	1/1976	Roselli et al.	219/203
3,940,822	3/1976	Emerick et al.	359/512
4,005,928	2/1977	Kmetz et al.	359/38
4,117,475	9/1978	Ebihara et al.	345/105
4,119,842	10/1978	Hayden et al.	250/201.1
4,161,653	7/1979	Bedini et al.	359/85
4,200,361	4/1980	Malvano et al.	359/38
4,201,451	5/1980	Jacob	359/38
4,251,316	2/1981	Smallbone	216/18
4,299,444	11/1981	Römer	359/38
4,309,082	1/1982	Kohara et al.	359/272
4,410,790	10/1983	Berg et al.	359/512
4,475,031	10/1984	Mockovciak, Jr.	359/84
4,512,637	4/1985	Ballmer	359/275
4,527,047	7/1985	Seitz	219/219
4,529,275	7/1985	Ballmer	359/275
4,529,873	7/1985	Ballmer et al.	259/265
4,572,619	2/1986	Reininger et al.	359/254

(List continued on next page.)

FOREIGN PATENT DOCUMENTS

54112490	3/1981	Japan .
57173801	10/1982	Japan .
60121141	6/1985	Japan .
60139545	7/1985	Japan .
60174342	9/1985	Japan .
6159317	3/1986	Japan .
59141215	4/1986	Japan .
6154942	4/1986	Japan .

OTHER PUBLICATIONS

Ushakov et al., "Electrochromism of Organic Compounds: Some Properties of Two-electrode Cells," Scientific-Research Institute of Organic Intermediates and Dyes, Moscow 1978.

Primary Examiner—Georgia Y. Epps
Assistant Examiner—Thomas Robbins
Attorney, Agent, or Firm—Van Dyke, Gardner, Linn & Burkhart, LLP

[57] **ABSTRACT**

A rearview mirror system for a vehicle having an electrochromic reflective element and heating means for uniformly heating substantially the entire reflectance surface in order to promote uniform coloration of the reflectance surface to a desired reflectance level. The reflective element is illustrated as an all solid-state electrochromic element having a large area reflectance surface for use as the exterior mirrors of a truck or other large vehicle. The application of energy to the heater can be controlled on the basis of a low ambient light condition and an ambient temperature that is low but not necessarily freezing, such as between 5° C. and 20° C. The heater can be resistance film that is evenly covering a surface of the reflective element and divided into first and second regions by an insulating break in the resistance film. Energy may be applied to one region in order to heat the reflectance element at a high rate to remove frost and dew. Energy may be applied to both regions in order to apply heat at a lower rate for even coloration of the mirror.

31 Claims, 5 Drawing Sheets

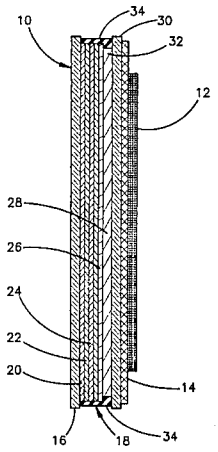

AMBILIGHT EX. 1012; Page 1
Ambilight v. Lannray PGR2026-00053

U.S. PATENT DOCUMENTS

4,580,875	4/1986	Bechtel et al.	359/604
4,584,461	4/1986	Teshima et al.	359/44
4,603,946	8/1986	Kato et al.	359/38
4,623,222	11/1986	Itoh et al.	359/38
4,632,509	12/1986	Ohmi et al.	359/38
4,634,835	1/1987	Suzuki	359/37
4,655,549	4/1987	Suzuki et al.	359/38
4,669,825	6/1987	Itoh et al.	359/38
4,676,601	6/1987	Itoh et al.	359/38
4,690,508	9/1987	Jacob	359/38
4,697,883	10/1987	Suzuki et al.	359/604
4,701,022	10/1987	Jacob	359/603
4,712,879	12/1987	Lynam et al.	359/275
4,715,698	12/1987	Haba	359/512
4,721,364	1/1988	Itoh et al.	359/38
4,741,603	5/1988	Miyagi et al.	359/270
4,793,690	12/1988	Gahan et al.	359/604
4,882,466	11/1989	Friel	219/219
4,896,030	1/1990	Miyaji	359/267
4,917,477	4/1990	Bechtel et al.	359/267
4,987,289	1/1991	Bishop et al.	359/36
5,130,842	7/1992	Gauthier et al.	359/265
5,151,824	9/1992	O'Farrell	359/604

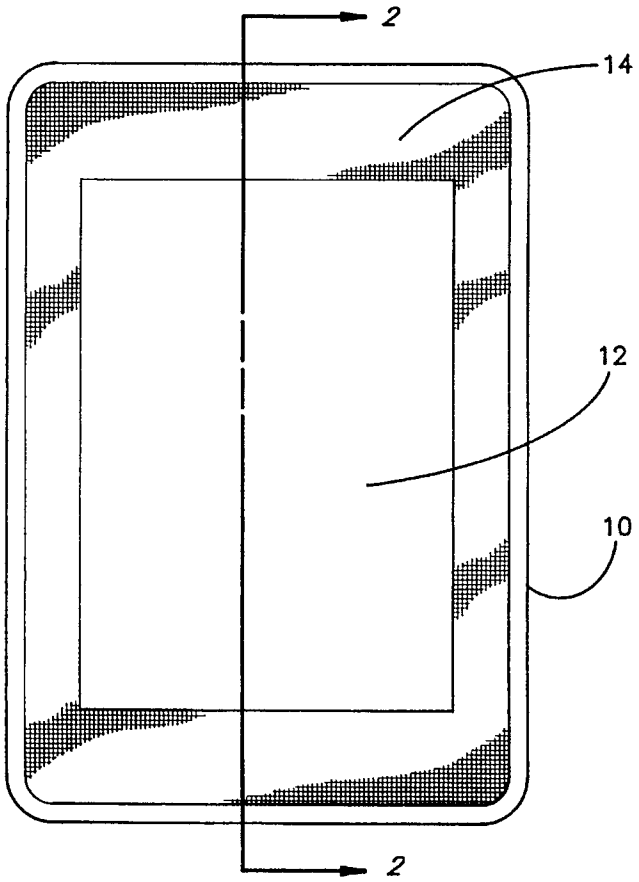

FIG. 1

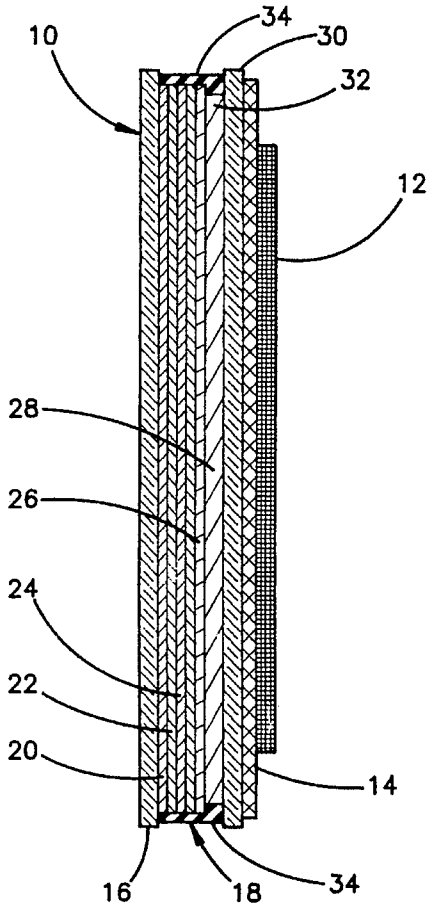

FIG. 2

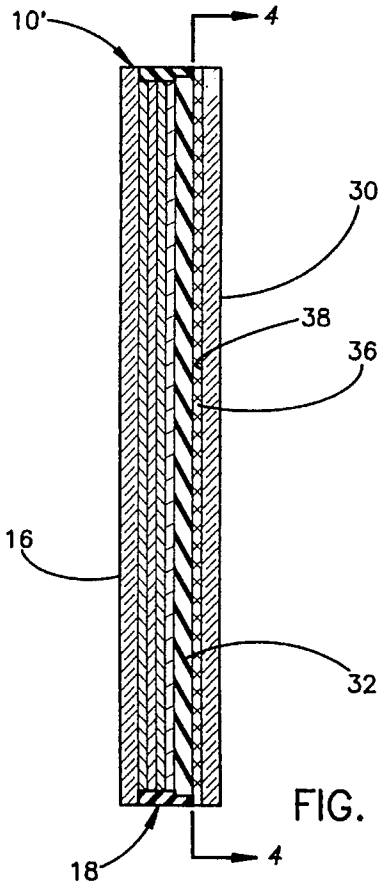

FIG. 3

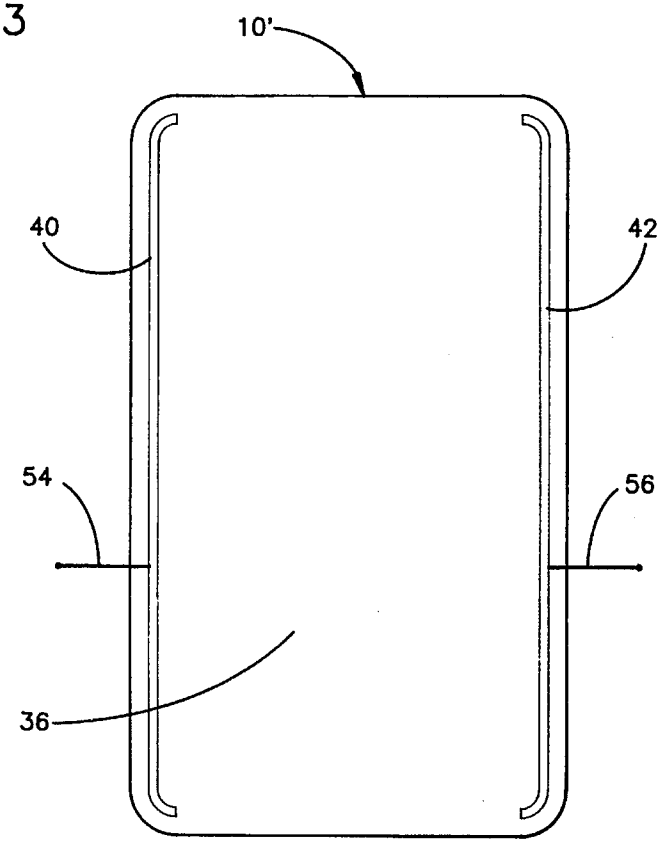

FIG. 4

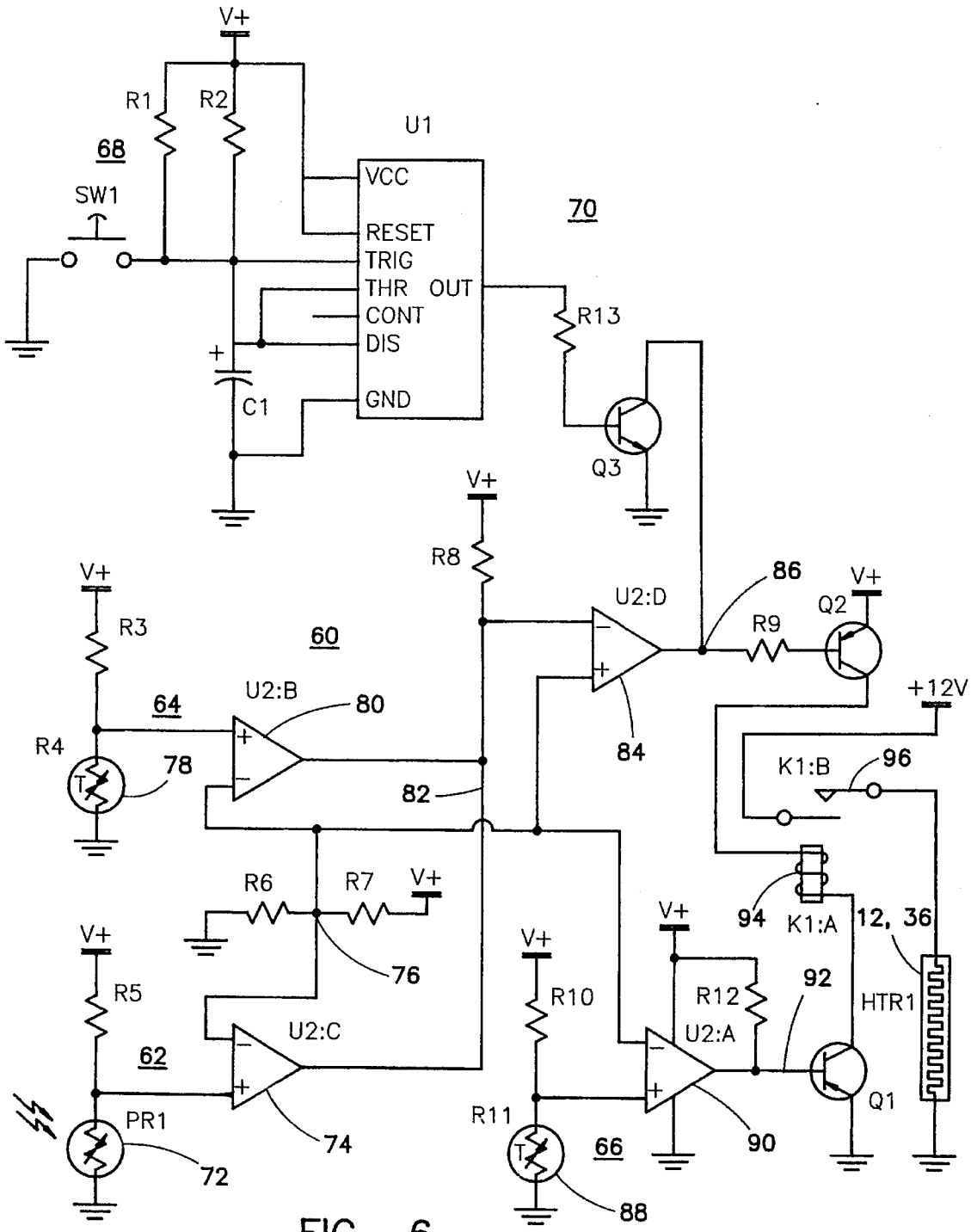

FIG. 6

AMBILIGHT EX. 1012; Page 5
Ambilight v. Lannray PGR2026-00053

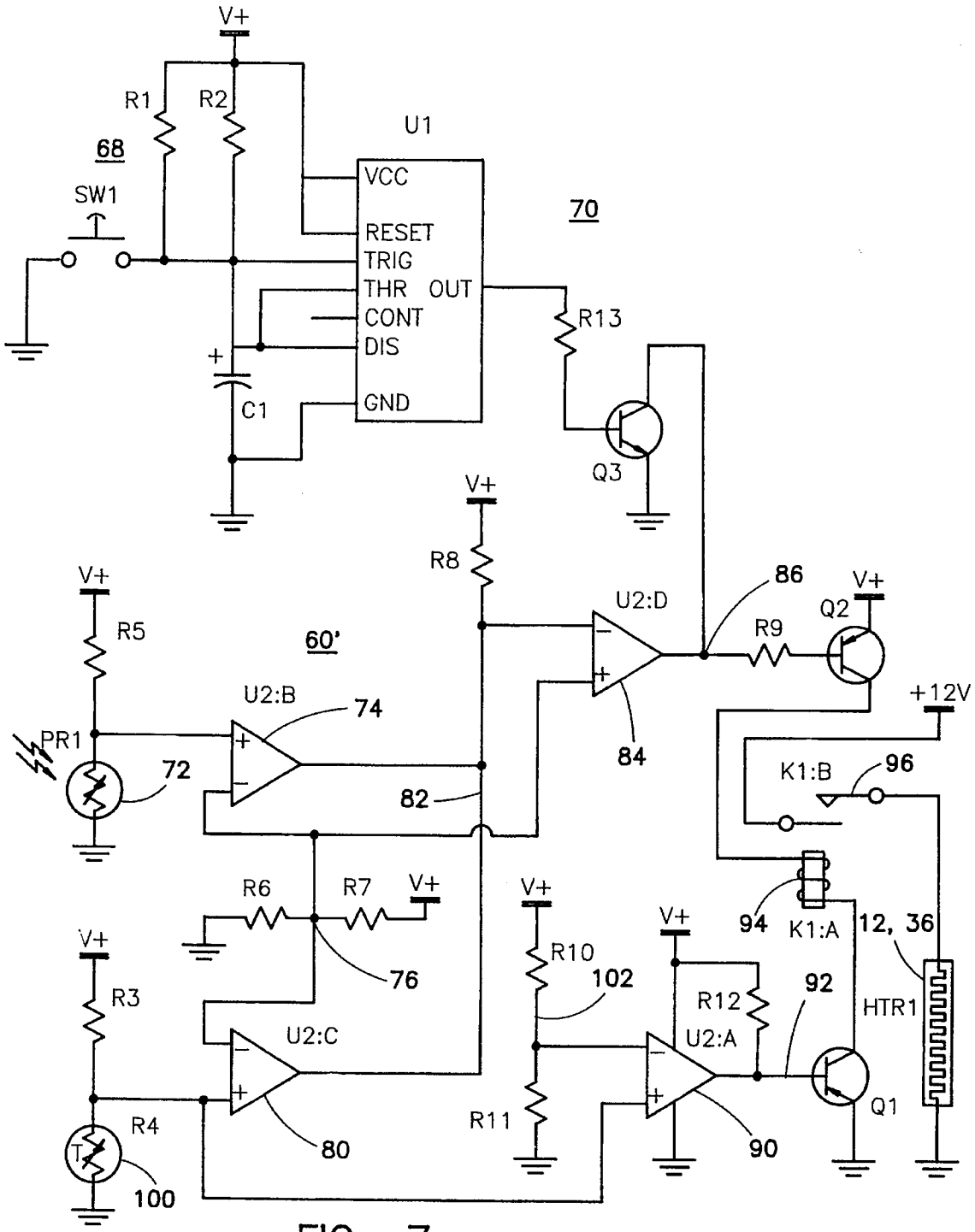

FIG. 7

AMBILIGHT EX. 1012; Page 6
Ambilight v. Lannray PGR2026-00053

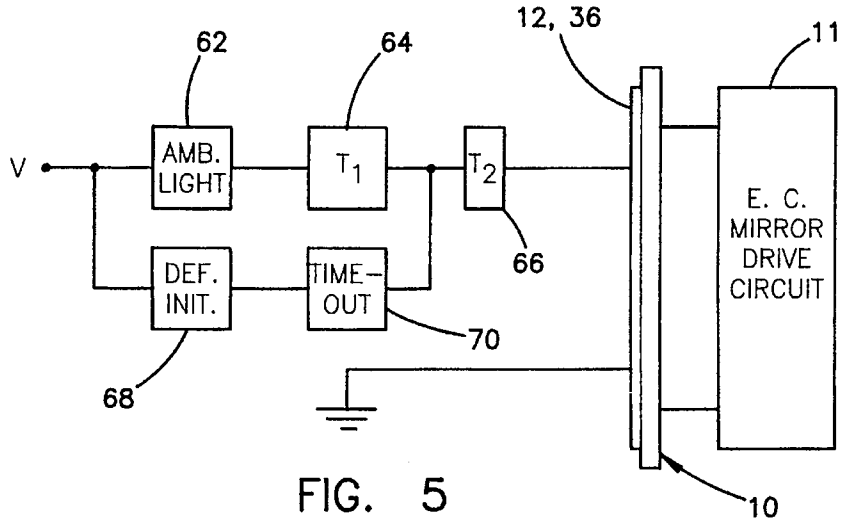
12, 36
11
62
64
V
AMB. LIGHT
T_1
T_2
E. C. MIRROR DRIVE CIRCUIT
66
DEF. INIT.
TIME-OUT
70
68
10

FIG. 5

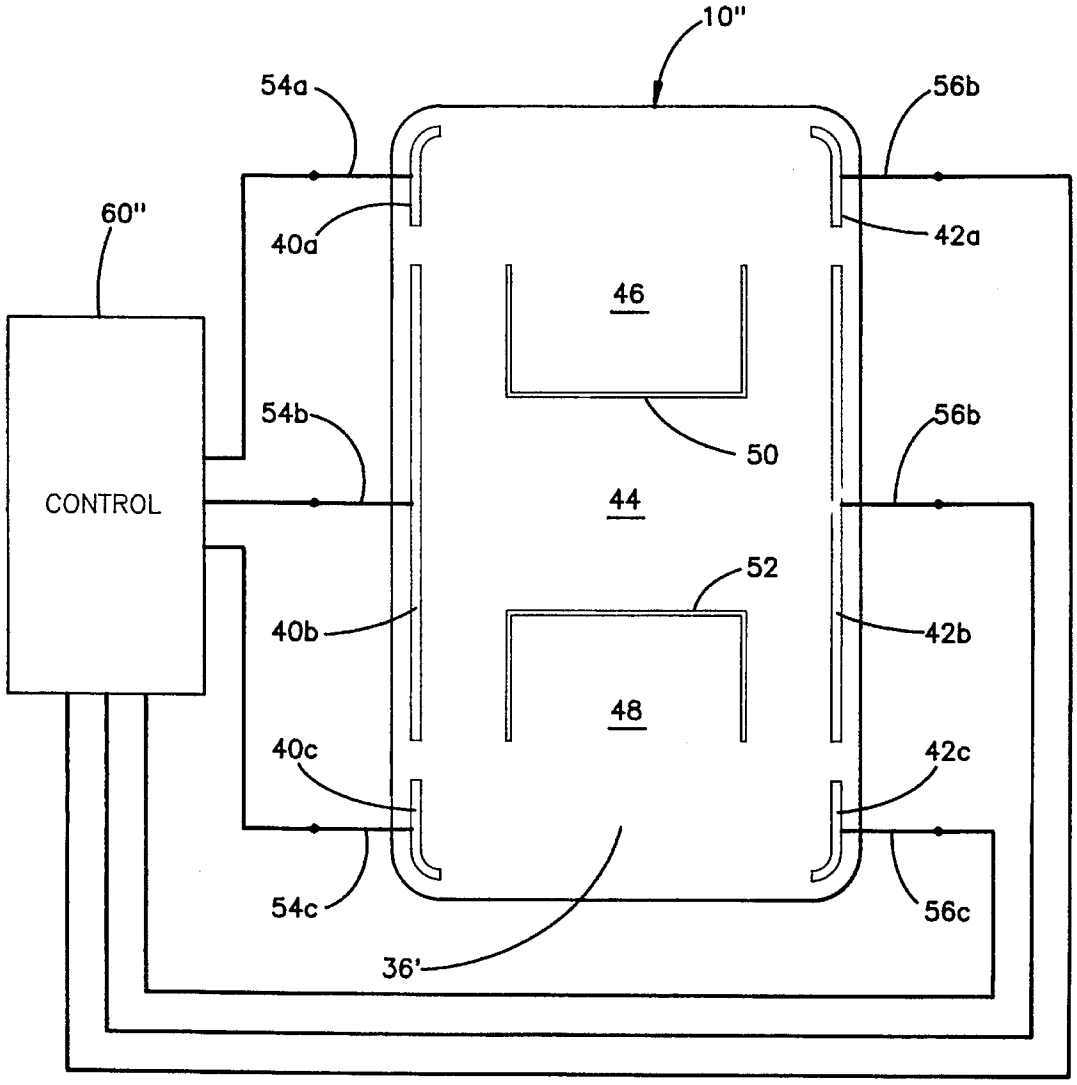
10"
54a
56b
60"
40a
42a
46
54b
56b
50
CONTROL
44
52
40b
42b
48
40c
42c
54c
56c
36'

FIG. 8

ELECTROCHROMIC MIRROR FOR VEHICLES

This is a continuation of application Ser. No. 07/971,676, filed Nov. 4, 1992, now U.S. Pat. No. 5,446,576, which is a continuation of application Ser. No. 07/643,186, filed Jan. 18, 1991, abandoned, which is a continuation-in-part of application Ser. No. 07/618,169, filed Nov. 26, 1990, now U.S. Pat. No. 5,151,824.

BACKGROUND OF THE INVENTION

This invention relates generally to vehicle rearview mirror systems and more particularly to mirror systems utilizing electrochromic reflective elements. The invention is especially adapted to externally located rearview mirrors utilizing an all solid-state electrochromic reflective element, having a continuously variable reflectance surface.

Use of auxiliary heaters to serve as defrosting means for exterior vehicle rearview mirrors is well known in the art. However, their purpose is merely to melt ice or evaporate moisture on the mirror surface, and particularly that built up while the vehicle was parked. Thus, prior art heaters for mirrors are intended to heat the mirror to at least 0° C. in as rapid a time as possible. Because the de-icing process is aided by already melted run-off water that tends to assist de-icing of peripheral areas, and because the center region of the mirror is the most utilized area, auxiliary heating means intended for defrosting purposes are more concerned with a rapid heating of the exposed front surface of the mirror, particularly its central region, rather than a uniform distribution of heat across the reflective element.

Although heating pads and resistance films can be designed to provide uniform power distribution suitable for de-icing purposes over the front surface of the mirror, commercially available products built according to the teachings of the prior art do not heat the reflective element in a truly uniform manner. However, because of the necessity for producing large quantities of heat as opposed to an even distribution, such prior art devices have proven satisfactory for the de-icing function.

Electronically dimming vehicle rearview mirror systems tend to utilize either liquid crystal or electrochromic reflective elements. Electrochromic reflective elements are further divided into all solid-state elements, such as disclosed in U.S. Pat. No. 4,712,879 issued to Niall R. Lynam for ELECTROCHROMIC MIRROR, and electrochemichromic elements such as disclosed in co-pending commonly assigned U.S. Pat. No. 5,140,455 for HIGH PERFORMANCE ELECTROCHEMICHROMIC SOLUTIONS AND DEVICES THEREFORE issued to Desaraju V. Varaprasad, Niall R. Lynam, Hamid R. Habibi and Padma Desaraju. The liquid crystal elements and the electrochemichromic elements are fluid-like at room temperature but greatly increase in viscosity and can even solidify at very low temperatures with a consequent decrease in performance. Accordingly, heating means are often provided for such elements when used in vehicle rearview mirror systems, such as disclosed in U.S. Pat. No. 4,584,461 for a PLANAR HEATER FOR LIQUID CRYSTAL ELEMENT, issued to Toru Teshima et al. The all solid-state electrochromic element stands in contrast to the liquid crystal and electrochemichromic elements in that it utilizes multiple layers of inorganic metal oxide thin films deposited on a transparent substrate rather than a solvent-based liquid solution. Thus all layers are solid at all temperatures. However,

cold climate operation is still a problem in that the electrochromic performance (the depth of dimming achieved, the speed of coloration and/or bleach, etc.) can be detrimentally effected at low temperatures. In this regard, all solid-state electrochromic mirrors have a particular disadvantage in that ion and electron conduction and transport through the thin films, important to the electrochromic coloration and/or bleaching, is particularly slowed at low temperatures (below ambient in general and 5° C. or thereabouts in particular). The net effect is that, at low temperatures, these solid-state electrochromic devices are significantly slowed and, if temperature gradients exist across the mirror surface, uneven coloration and/or bleaching can be seen. Such effects are consumer undesirable and detract from the glare protection performance of the units.

SUMMARY OF THE INVENTION

According to the invention, means are provided to heat the electrochromic stack so that the electrochromic performance expected by the driver during normal temperature (20° C. or thereabouts) operation can be delivered when the mirrors are operated at low temperatures. Moreover, this heating is very uniformly distributed across the entire electrochromically-active mirror surface so that there are no thermal gradients and so that the coloration/bleaching of the mirror device is uniform. The need for truly uniform heating means, and the difficulty to so provide, grows as the size of the mirror increases and is particularly difficult for large area mirrors such as truck mirrors used on class 8 vehicles and the like.

In a rearview mirror system having an electronically controlled element such as an all solid-state electrochromic reflective element with a continuously variable reflectance surface, perceived quality requires that the reflective element color to a uniform reflectance level over the entire surface. Furthermore, drive circuit means, particularly those that operate as an open loop control system, without obtaining feedback by sensing glare-producing light after it has passed through the electrochromic element, produce a drive signal having a value that establishes the reflectivity of the reflective element at a given level, as a function of the ambient light and the glare experienced by the driver. It is desirable that, for a given value of the drive signal, the reflective element uniformly colors to a given reflectivity level.

According to one aspect of the invention, a rearview mirror having an all solid-state electrochromic reflective element includes drive circuit means for supplying a signal to the reflective element in order to color the reflective element to establish its reflectance level. Heating means are provided for very uniformly heating substantially the entire surface of the reflective element in order to promote uniform coloration of the surface to a given reflectance level for a given level of the drive signal.

According to another aspect of the invention, a reflective element having a continuously variable reflectance surface is provided with drive circuit means for supplying a signal to the reflective element in order to establish its reflectance level. A heater is provided in heat transfer association with the reflective element in order to supply heat to the reflective element when the heater is energized. Circuit means are provided for selectively applying energy to the heater, the circuit means being responsive to an ambient light level indicator in order to apply energy to the heater during low ambient light conditions and at low temperatures. In this

AMBILIGHT EX. 1012; Page 8
Ambilight v. Lannray PGR2026-00053

manner, the reflective element is heated in cold climates when the ambient light conditions indicate that the mirror is likely to be colored to a lower reflectance level to reduce the amount of glare reflected to the driver's eyes.

According to yet another aspect of the invention, the heating means for supplying heat to the reflectance surface includes first means for applying heat evenly distributed across substantially the entire reflectance surface and second means for applying heat to the reflectance surface at a higher rate than the first means. In this manner, heater control means may actuate the first means when needed to enhance the coloration of the reflective element to an even, accurate reflectance level. When de-icing of the reflective element is necessary, the heater control means actuates the second means to apply heat at a higher rate to quickly melt accumulated ice.

Accordingly, the invention provides very uniform heating of continuously variable reflectance elements, and in particular all-solid-state electrochromic mirrors. The invention additionally provides very uniform heating to continuously variable reflectance elements in a manner that is practical and commercially viable, particularly for large area reflectance elements, such as those used for truck mirrors. The invention further provides control circuitry adapted to meeting the particular needs of electronically dimming rearview mirror systems.

These and other objects, advantages and features of this invention will become apparent upon review of the following specification in conjunction with the drawings.

BRIEF DESCRIPTION OF THE DRAWINGS

FIG. **1** is a rear elevation of a mirror system according to the invention;

FIG. **2** is a cross-section taken along the lines II—II in FIG. **1**;

FIG. **3** is the same view as FIG. **2**, of an alternative embodiment;

FIG. **4** is a cross-section taken along the line IV—IV in FIG. **3**;

FIG. **5** is a block diagram of an electrical control circuit according to the invention;

FIG. **6** is a schematic diagram of the electrical control circuit in FIG. **5**;

FIG. **7** is a schematic diagram of an alternative embodiment of an electrical control circuit; and

FIG. **8** is an elevation view of a heating film illustrating an alternative embodiment.

DESCRIPTION OF THE PREFERRED EMBODIMENT

Referring now specifically to the drawings, and the illustrative embodiments depicted therein, a mirror system has an electrochromic reflective element **10** that includes a heater pad **12** and heat distribution pad **14** for distributing heat from heater pad **12** uniformly across the reflective surface of reflective element **10** (FIG. **1**). When heater pad **12** is supplied with energy, its heat output is evenly distributed across the entire mirror area, even to the outer extremities, by heat distribution pad **14**. Heat distribution pad **14** is preferably a high-conductivity metal, such an aluminum foil or copper foil of thickness greater than 10 mils. In the illustrative embodiment, heat distribution pad **14** is an 11 mil. aluminum sheet with an adhesive layer, which is commercially available from 3M Products, Inc. Heater pad **12** is a resistance heater having a positive temperature coefficient in order to maintain electrochromic reflective element **10** at a relatively constant temperature, whenever heater pad **12** is energized.

Electrochromic reflective element **10** is an all solid-state electrochromic device of the type disclosed in commonly-owned U.S. Pat. No. 4,712,879, issued to Niall R. Lynam for an ELECTROCHROMIC MIRROR, the disclosure of which is hereby incorporated herein by reference. Electrochromic reflective element **10** includes a transparent front glass plate **16**, or similar substrate, upon which a multiple-layer stack of inorganic metal oxide films, generally shown at **18**, are deposited (FIG. **2**). This stack includes a first layer **20** of indium tin oxide, deposited to a thickness of 1500 angstrom units. Next is a layer **22** of NiO deposited to a thickness of 450 angstrom units, followed by a layer **24** of Ta_2O_5, deposited to a thickness of 1200 angstrom units. This is followed by a layer **26** of WO_3 deposited to a thickness of 800 angstrom units and a reflective layer **28** of aluminum deposited to a thickness of 1000 angstrom units. Electrochromic reflective element **10** further includes a rear glass plate **30**, or similar substrate, which is bonded to the film stack **18** by a layer **32** of insulating interlayer, such as polyvinylbutyral (PVB). This assembly is sealed by a perimeter layer **34** of epoxy applied to reflective element **10** by a silk screening process.

A preferred, alternative electrochromic reflective element **10'** includes a resistance layer, or heating film, **36** deposited on an inwardly facing surface **38** of rear glass plate **30**. Resistance layer **36** may be a metal thin-film, or a thick film of graphite or a polymer doped with a resistive means, such a graphite. In the illustrated embodiment, resistance layer **36** is a vacuum-deposited thin-film of titanium, inconel, chromium, stainless steel or hastelloy, or similar material of sheet resistance of 1×10^{-5} ohm cm. to 1×10^{-4} ohm cm. or thereabouts deposited to a thickness to provide sheet resistance of 0.2 to 20 ohms/square or thereabouts. In order to achieve this sheet resistance, the particular metal will be deposited to a thickness of between 500 and 5000 angstrom units. The specific resistivity value is selected as a function of the power dissipation required, the voltage to be applied, the aspect ratio geometry of the reflective element and the buss bar layout. In the illustrated embodiment, resistance layer **36** is selected in order to dissipate power in the range of 1.0 to 1.5 watts per square inch of active electrochromic reflective area.

Resistance layer **36** is deposited on the inward facing surface **38** of rear glass plate **21** in order to isolate the layer from the outside environment. Thus, the dangers of short circuits and corrosion of the metal layer are minimized. Interlayer layer **32**, in addition to encapsulating the stack of inorganic films **18** and the resistance layer **36**, additionally serve as a safety/antiscatter layer and an electrical insulation between resistance layer **36** and the stack of inorganic films **18**. Alternatively, heater pad **12** and heat distribution pad **14** (FIG. **2**) could also be located on the inward facing surface of rear glass plate **30**.

Electrochromic reflective element **10'** additionally includes buss bars **40** and **42** along opposite vertical perimeter edge portions, with electrical interconnection terminals **54**, **56** provided in order to supply electrical energy to heating film **36** (FIG. **4**). Buss bars **40** and **42** are applied to heating film **36** using ultrasonically-assisted soldering with CERASOLZER solder, manufactured by She Asahi Glass Company. However, buss bars **40** and **42** may be provided by silver frit or by a metal ribbon connector crimped along the edges of resistance layer **36**, both techniques being well known in the art.

AMBILIGHT EX. 1012; Page 9
Ambilight v. Lannray PGR2026-00053

Electrochromic reflective element **10** may be produced by depositing resistance layer **36** upon a large sheet of rear glass plate **30** and subsequently cutting the rear glass plate from the larger coated sheet of glass. This technique has the advantage of utilizing in-line coaters commonly used for coating architectural windows and avoids over-spray along the cut glass edges. Over-spray potentially exposes resistance layer **36** to contact from the exterior, which is potentially hazardous and detrimental to the successful operation of the reflective element **10**.

In order to control the application of energy to heater pad **12** or resistance layer **36**, a control circuit **59** is provided (FIG. **5**). Control circuit **59** includes an ambient light indicating means **62** which indicates that a low ambient light condition exists. Indicating means **62** is connected from a voltage source V in series with a first temperature responsive switch means (T_1) **64**, which is closed, or conducting, whenever the ambient temperature is below a predetermined temperature, such as 15° C.–20° C. and a second temperature responsive means (T_2) **66**, which is closed whenever the ambient temperature is below a second, higher level, such as 60° C. In this manner, energizing voltage V is applied to heater pad **12**, or resistance film **36**, whenever indicating means **62** indicates that a low ambient light condition exists and temperature sensor **64** indicates that the temperature is below 15° C.–20° C. Temperature sensor **64** is provided for the purpose of energizing heater pad **12** or resistance layer **36** only when the ambient temperature is below a level that may produce color gradients in electrochromic reflective element **10**, or cause element **10** to provide an erroneous reflectance level from that established by an electrochromic element drive circuit **11**, such as that disclosed in commonly owned U.S. Pat. No. 4,793,690, issued to Edward A. Gahan, Keith W. Molyneux and Kenneth Schofield for a REAR-VIEW MIRROR CONTROL CIRCUIT. Note that if the heater pad **12** is of the positive temperature coefficient type described in U.S. Pat. No. 4,882,466 to Friel et al., the overtemperature protection provided by temperature sensor **66** can optionally be dispensed with.

Control circuit **60** additionally includes a conventional defrost initiate means **68** which may be a manually actuatable switch, or a temperature sensor, or a combination of the both, in order to indicate the desirability of energizing heater pad **12** or resistance layer **36** in order to de-ice reflective element **10**. As is conventional, defrost initiate means **68** is combined with a time out circuit **70** to remove power from heater pad **12** or resistance layer **36** after a predetermined period of time following the initiation of defrosting by actuation of means **68**. Overload temperature sensor **66** will disconnect voltage source V from reflective element **10** if the temperature of reflectance element **10** exceeds set point T_2, which is typically 60° C.

Control circuit **60** is responsive to conditions when the drive circuitry for electrochromic reflective element **10** is active, provided that the mirror temperature is below a given level that will have a tendency to affect the rate and degree of coloration of the reflective element. Because glare is usually not a problem during daylight, or high ambient light levels, the glare protection of the electrochromic reflective element is usually inactive or dormant. Thus, control circuit **60** eliminates unnecessary expenditure of electrical energy to activate the heating means by day. Ambient light indicating means **62** may be provided in many different manners, the particular manner being a function of the type of drive circuit **11** utilized to determine the reflectant level of reflective element **10**. Accordingly, if the drive circuit for the reflective element has a manual on/off switch, ambient light indicating means **62** may be made responsive to such switch because the driver will typically energize the drive circuit only when it is desired to lower the reflectance level of the mirror, which typically is during low ambient conditions. Alternatively, ambient light indicating means **62** may be made responsive to the headlight-actuating switch for the vehicle which, typically, is usually actuated during low ambient light conditions. Use of circuit **60** in such a mode allows the driver to turn on the headlights during daylight while highway driving without wastefully energizing the heater pad **12**. However, ambient light indicating means **62** may be a separate ambient light sensing means which is responsive to the level of ambient light being below a predetermined level. Such light sensing means are well known in the art, and may include a separate sensor or an ambient light sensor that is part of the drive circuitry of a fully-automated glare reducing interior rearview mirror or part of a twilight sentinel. A separate ambient light sensor may be mounted on the exterior, or interior, portion of the vehicle and may be shielded in order to respond to variations in ambient light conditions external of the vehicle or internal to the vehicle. Such shielding techniques are well known in the art.

Control circuit **60**, as illustrated in FIG. **6**, may include a low ambient light sensor **72** connected in a voltage divider with a resistor R5 and applied to the non-inverting input of a comparator **74**, whose inverting input is connected to a fixed reference voltage **76** established by a voltage divider including resistors R6 and R7. Control circuit **60** may additionally include a low temperature sensor **78** connected in a voltage divider with a resistor R3 and applied to the non-inverting input of a comparator **80**, whose inverting input is connected with reference voltage **76**. The outputs of comparitors **74** and **80** are connected together at junction **82**, which is connected to a pull-up resistor R8 and applied to the inverting input of a comparator **84**. The non-inverting input of comparator **84** is connected with reference voltage **76** and its output **86** is connected to the collector of a transistor Q3, and through a resistor R9, to the base of a transistor Q2.

Control circuit **60** additionally includes a high temperature sensor **88** connected in a voltage divider with a resistor R10 and applied to the non-inverting input of a comparator **90**, whose inverting input is connected with reference voltage **76**. An output **92** of comparator **90** is connected to a pull-up resistor R12 and is applied to the base of a transistor Q1. The emitter-collector junctions of transistors Q1 and Q2 are connected in a series circuit between voltage source V and ground in series with a coil **94** of a relay K1. The normally-open contacts **96** of relay K1 are connected between the vehicles battery voltage plugs (+12 V) and heating means **12**, **36**. Control circuit **60** additionally includes a manually actuatable switch SW1 connected to a pull-up resistor R1 and is applied to the trigger input of a monostable multivibrator U1. The output of multivibrator U1 is connected through a resistor R13 to the base of transistor Q3.

In operation, when the level of ambient light sensed by light sensor **72** decreases below a level determined by the voltage at reference **76** and the value of resistor R5, the output of comparator **74** switches from ground to a floating condition. If the ambient temperature, as sensed by sensor **78**, is below a predetermined level, such as 15° C.–20° C. as established by the level of reference **76** and the value of resistor R3, the output of comparator **80** will additionally switch to a floating condition. If the output of both comparitors **74** and **80** are floating, resistor R8 will pull line **82** high, which will cause output **86** of comparator **84** to be

AMBILIGHT EX. 1012; Page 10
Ambilight v. Lannray PGR2026-00053

pulled low. If the output **92** of comparator **90** is in a high state, which will occur as long as the temperature sensed by overtemperature sensor **88** is below the set point established by reference voltage **76** and resistor R**10**, transistors Q**1** and Q**2** will conduct a current through the coil **94** of relay K**1**, thus energizing heating means **12**, **36**. If the ambient light sensed by sensor **72** or the temperature sensed by temperature sensor **78** increases above their respective set points, the associated comparator will switch line **82** to a low state which will cause output of comparator **84** to float. This will turn off transistor Q**2** and open contacts **96** of relay K**1** to de-energize heating means **12**, **36**. Likewise, if the temperature sensed by overtemperature sensor **88** increases above its respective set point, output **92** of comparator **90** will be switched low which will cause transistor Q**1** to cease conducting and de-energize relay K**1**.

When switch SW**1** is manually closed by an operator desiring to remove frost or dew from reflective element **10**, the output of monostable multivibrator U**1** switches high which turns on transistor Q**3** which pulls output **86** to a low state. This causes transistor Q**2** to conduct and, as long as the ambient temperature sensed by overtemperature sensor **88** is below its respective set point, transistor Q**1** will additionally be conducting which will cause coil **94** of relay K**1** to close switch **96** and energize heating means **12**, **36**. At the end of the timed period for monostable multivibrator **70** established by resistor R**2** and capacitor C**1** at several minutes, its output switches to a low state which turns transistor Q**3** off. This allows output **86** to float provided that comparator **84** is not pulling it low, which causes transistor Q**2** to cease conducting, which de-energizes heating means **12**, **36**.

Control circuit **60'** performs the same functions as control circuit **60** except that a single temperature sensor **100** performs the functions performed by sensors **78** and **88** in circuit **60** (FIG. **7**). This is accomplished by providing a set point voltage **102**, by a voltage divider defined by resistors R**10** and R**11**, for comparator **90** that is separate from the set point **76** established for comparator **80**. Therefore, if the temperature sensed by temperature sensor **100** is below the set point established by reference **76**, the output of comparator **80** will be floating and, if the output of comparator **74** is also floating in response to a low ambient light condition, the output of comparator **84** will be low which causes transistor Q**2** to be conducting. Because the set point established for comparator **80** is necessarily lower than that established for comparator **90**, the output of comparator **90** will be high, which will cause transistor Q**1** to be conducting. Therefore, relay K**1** will be energized in order to apply power to heating means **12**, **36**. If the temperature sensed by temperature sensor **100** is above the set point for comparator **80** but below the set point for comparator **90**, the output of comparator **80** will pull line **82** low which will cause the output of comparator **84** to float. Therefore, unless output **86** is pulled low by transistor Q**3**, transistor Q**2** will be non-conducting and heating means **12**, **36** will be deenergized. If, however, Q**3** is conducting because of the recent actuation of switch S**1**, output **86** will be pulled low, energizing transistor Q**2**. This will energize heating means **12**, **36** unless the temperature sensed by temperature sensor **100** is greater than the set point of comparator **90**, as established by voltage reference **102**. If the temperature exceeds this set point, then output **92** of comparator **90** will switch low which will cause transistor Q**1** to be non-conducting, which will de-energize relay K**1** irrespective of the state of transistor Q**2**.

A resistance layer, or heater film, may be used with its own control circuitry and be provided with a separate heating pad **12** used for performing the defrosting function. This would allow optimized design of each heating means for its specialized function. The defrosting heating pad would be designed for rapid defrosting, particularly in the central region of the reflectively element, and would typically carry a relatively large current for a short period. The resistance layer would provide heating of the entire reflective surface with a lesser current but with greater uniformity over the entire active surface of the reflective element and for a longer period of time.

Such specialized de-icing function, in which localized heat is desired at a high level, and uniform coloration function in which uniform heating of the entire active surface of the reflective element at a lesser level, may be provided in an electrochromic reflective element **10"** having a specially configured heating film **36"** (FIG. **8**). Heating film **36"** includes buss bar sets **40***a*, **40***b* and **40***c* along one vertically extending edge portion of heating film, resistance layer, **36'** and set **42***a*, **42***b* and **42***c* along right side portion of resistance layer **36'**. Resistance layer **36'** includes a central portion **44** located generally between buss bar segments **40***b* and **42***b*, a top portion **46** located generally between buss bar segments **40***a* and **42***a* and a lower portion **48** located generally between buss bar segments **40***c* and **42***c*. A U-shaped insulating break **50** in resistance layer **36'** generally separates portion **46** from portion **44** and an oppositely facing U-shaped insulating break **52** generally separates portion **48** from portion **44**. Buss bar segments **40***a*, **40***b* and **40***c* are connected with a control circuit **60"** by terminals **54***a*, **54***b* and **54***c* respectively. Buss bar segments **42***a*, **42***b* and **42***c* are connected with control circuit **60"** by terminals **56***a*, **56***b* and **56***c* respectively.

With resistance layer **36'** segmented in the manner illustrated in FIG. **8**, electrochromic reflective element **10"** is capable of being heated rapidly in a more localized manner for the purpose of defrosting the reflective element and in a more uniform, but less concentrated, manner for the purposes of maintaining uniform temperature in order to control the coloration of the reflective element. In order to defrost reflective element **10"**, a voltage V is applied across terminals **54***b*, **56***b* alone. Because insulating breaks **50** and **52** partially separate portions **46** and **48** from middle portion **44** of the resistance layer, a greater current density will be generated in central portion **44** than in either upper or lower portions **46**, **48**. Furthermore, the power generated by resistance layer **36'** will be relatively high because the resistance between terminals **54***b* and **56***b* will be relatively low, increasing the I^2R heating of reflective element of **10"**. When it is desired to maintain a uniform heating of reflective element **10"**, terminals **54***a*, **54***b* and **54***c* are shorted together and terminals **56***a*, **56***b* and **56***c* are shorted together with voltage V applied across terminals **54***a*, **54***b*, **54***c* and terminals **56***a*, **56***b*, **56***c*. Because the voltage gradient is applied across the entire resistance layer **36'**, the heat generated by layer **36'** is uniform across the entire reflective element **10"**. The aspect ratio geometry of resistance layer **36'** provides that the resistance between shorted terminals **54***a*, **54***b*, **54***c* and **56***a*, **56***b*, **56***c* is greater than that between **54***b* and **56***b* alone. The reason is that, the resistance film is inversely proportional to the "squareness" of the surface, not its total size. Therefore, the "more square" central portion **44** has a lower resistance than the "less square" overall layer **36'** having portions **44**, **46** and **48**. Therefore, a lower current density, and hence I^2R, will be provided when voltage V is applied across the entire layer **36'**.

Other alternatives are possible. If a transparent conductor like ITO is used for resistance layer **36**, the layer could be deposited on the front surface of the front glass plate **16**.

However, there are drawbacks to this approach, including the cost of the transparent film and the exposure of the heated film to the elements where wind-losses reduce efficiency and road salt may cause damage over time.

The present invention recognizes the need of providing uniform heat distribution for electrochromic mirrors, and particularly for all solid-state reflective elements. This is accomplished in a manner that recognizes that the traditional de-icing function of the mirror may be desired at times when the glare protection of the electrochromic reflective element is not desired, and vice versa. For example, by day, many drivers may desire to de-ice the mirror. Once the ice build up has been removed, the driver usually does not want to have the defrosting mirror continually heated and, with the ice gone, now wastefully draining the automobile power system. Likewise, at night and at low but not necessarily freezing temperature, 5° C. for example, it is desirable to have the uniform heat distribution means operate but operation of the defrosting means is not needed.

The heating requirements recognized by the present invention for solid-state electrochromic mirrors and equivalent devices are not well met by the prior art defrosting means for mirrors. Even when ice has not built up on the mirror, the ambient temperature may be sufficiently low to produce an erroneous level of coloration of the reflective element. Also, whereas ice can build up during any time of day or night, glare principally occurs at night. In the situation where the invention is utilized with a manually-operated mirror system that allows the driver control over the reflectance level of the mirror, the driver benefits from independent control over both the de-icing function and the electrochromic function as it relates to the reflectance level of the reflective element. By using the circuitry of this invention, the heating means requirements are automatically activated whenever a low ambient and low temperature condition simultaneously exist. Thus the driver is spared the confusion of deciding when heating of the electrochromic element is required. Also, the circuitry ensures that, by day when ambient light levels are high, the electrochromic heating means are not wastefully activated. On occasions when the driver simultaneously desires a defrosting function and heating for uniform coloration, the driver will benefit from both of these function being operated concurrently in a manner that is convenient to the driver and that reduces the number of inputs. Accordingly, the heating function associated with the reflectance level is automatically operated in cold climates by night under conditions that may cause distortion in the reflectance level of the mirror.

The circuits and concepts of this invention are readily applicable to a wide variety of rearview mirror systems. For example, in a vehicle such as a convertible where all three rearview mirrors (the interior mirror and driver- and passenger-side exterior mirrors) are potentially exposed to the outside climate, all three mirrors can be controlled by a single control unit such as described in FIGS. **5**, **6** and **7** herein.

Other changes and modifications in the specifically described embodiments can be carried out without departing from the principles of the invention which is intended to be limited only by the scope of the appended claims, as interpreted according to the principles of patent law, including the Doctrine of Equivalents.

The embodiments of the invention in which an exclusive property or privilege are defined as follows:

We claim:

1. An exterior rearview mirror having a manually activated heating system for a vehicle comprising:

an electrochromic reflective element having an electrochromically active area, said electrochromic reflective element including a first glass plate having a front and rear surface, a second glass plate having a front and rear surface, and an electrochromic medium disposed between the rear surface of said first glass plate and the front surface of said second glass plate;

said from surface of said first glass plate being subject to frosting when exposed to an outdoor environment at a temperature of 0° C. or lower;

electrical means to achieve an electrochromic function for supplying a signal to said reflective element in order to establish the reflectance level of said reflective element;

heating means to achieve a defrosting function on a surface of said second glass plate for heating said surface of said second glass plate in order to enhance coloration and bleaching of said electrochromic reflective element during low temperature operation and to defrost said front surface of said first glass plate, wherein said heating means includes one of a positive temperature coefficient material, a metal layer, and a transparent conductor layer;

said heating means being electrically insulated from said electrochromic medium;

manually activated control means for applying energy in the form of direct current from an automobile power system to said heating means wherein said control means includes a defrost initiate means that is manually actuated when frost is present on said front surface of said first glass plate; and

wherein said defrost initiate means applies energy to said heating means independently of said electrical means in a manner that enables independent control over both the defrosting function and the electrochromic function and includes timing means for removing energy from said heating means after a predetermined time following actuation of said defrost initiate means.

2. The exterior rearview mirror of claim **1** wherein said surface of said second glass plate is the rear surface of said second glass plate.

3. The exterior rearview mirror of claim **2** wherein said heating means comprises a positive temperature coefficient material.

4. The exterior rearview mirror of claim **3** wherein said surface is said rear surface of said second glass plate and said positive temperature coefficient material comprises a positive temperature coefficient heater pad.

5. The exterior rearview mirror of claim **1** wherein said electrochromic medium comprises an electrochemichromic medium.

6. The exterior rearview mirror system of claim **5** wherein said heating means comprises a positive temperature coefficient heater pad.

7. The exterior rearview mirror of claim **1** wherein said heating means comprises a metal layer.

8. The exterior rearview mirror of claim **7** wherein said metal layer is selected from the group consisting of a titanium, an inconel, a chromium, a stainless steel, and a hastelloy layer.

9. The exterior rearview mirror of claim **7** wherein said metal layer is vacuum-deposited on said surface of said second glass plate.

10. The exterior rearview mirror of claim **1** wherein said heating means comprises a transparent conductor layer.

11. The exterior rearview mirror of claim **1** wherein said control means further includes over temperature protector

means for preventing said heating means from exceeding a predetermined high temperature.

12. The exterior rearview mirror of claim **11** wherein said predetermined high temperature is 60° C.

13. The exterior rearview mirror of claim **11** wherein said over temperature protector means comprises a temperature sensor.

14. The exterior rearview mirror of claim **11** wherein said electrochromic reflective element is adapted for use as a side mirror of a Class 8 truck.

15. An exterior rearview mirror for a vehicle comprising:

an electrochromic reflective element having an electrochromically active area, said electrochromic reflective element including a first glass plate having a front and rear surface, a second glass plate having a front and rear surface, and an electrochromic medium disposed between the rear surface of said first glass plate and the front surface of said second glass plate;

said from surface of said first glass plate being subject to frosting when exposed to an outdoor environment at a temperature of 0° C. or lower;

electrical means for supplying a signal to said reflective element in order to establish the reflectance level of said reflective element;

heating means on the rear surface of said second glass plate for heating said rear surface of said second glass plate in order to enhance coloration and bleaching of said electrochromic reflective element during low temperature operation and to defrost said front surface of said first glass plate, wherein said heating means comprises a positive temperature coefficient material, wherein said heating means dissipates power in the range of between 1.0 watts and 1.5 watts per square inch of said electrochromically active area;

control means for applying energy to said heating means wherein said control means includes a defrost initiate means that is manually actuated when frost is present on said front surface of said first glass plate; and

wherein said defrost initiate means includes timing means for removing energy from said heating means after a predetermined time following actuation of said defrost initiate means.

16. The exterior rearview mirror of claim **15** wherein said electrochromic medium comprises an electrochemichromic medium.

17. The exterior rearview mirror of claim **16** wherein said heating means is adapted to preferentially heat a central portion of said electrochromically active area in order to promote rapid defrosting of said front surface of said first glass plate.

18. An exterior rearview mirror for a vehicle comprising:

an electrochromic reflective element having an electrochromically active area, said electrochromic reflective element including a first glass plate having a front and rear surface, a second glass plate having a front and rear surface, and an electrochromic medium disposed between the rear surface of said first glass plate and the front surface of said second glass plate;

said front surface of said first glass plate being subject to frosting when exposed to an outdoor environment at a temperature of 0° C. or lower;

electrical means for supplying a signal to said reflective element in order to establish the reflectance level of said reflective element;

heating means on a surface of said second glass plate for heating said surface of said second glass plate in order to enhance coloration and bleaching of said electrochromic reflective element during low temperature operation and to defrost said front surface of said first glass plate, wherein said heating means comprises a metal layer that is selected from the group consisting of a titanium, an inconel, a chromium, a stainless steel, and a hastelloy layer, wherein said metal layer is vacuum-deposited on said surface of said second glass plate, wherein said heating means dissipates power in the range of between 1.0 watts and 1.5 watts per square inch of said electrochromically active area;

control means for applying energy to said heating means wherein said control means includes a defrost initiate means that is manually actuated when frost is present on said front surface of said first glass plate; and

wherein said defrost initiate means includes timing means for removing energy from said heating means after a predetermined time following actuation of said defrost initiate means.

19. An exterior rearview mirror for a vehicle comprising:

an electrochromic reflective element having an electrochromically active area, said electrochromic reflective element including a first glass plate having a front and rear surface, a second glass plate having a front and rear surface, and an electrochromic medium disposed between the rear surface of said first glass plate and the front surface of said second glass plate;

said front surface of said first glass plate being subject to frosting when exposed to an outdoor environment at a temperature of 0° C. or lower:

electrical means for supplying a signal to said reflective element in order to establish the reflectance level of said reflective element;

heating means on a surface of said second glass plate for heating said surface of said second glass plate in order to enhance coloration and bleaching of said electrochromic reflective element during low temperature operation and to defrost said front surface of said first glass plate, wherein said heating means comprises a transparent conductor layer, wherein said heating means dissipates power in the range of between 1.0 watts and 1.5 watts per square inch of said electrochromically active area;

control means for applying energy to said heating means wherein said control means includes a defrost initiate means that is manually actuated when frost is present on said from surface of said first glass plate; and

wherein said defrost initiate means includes timing means for removing energy from said heating means after a predetermined time following actuation of said defrost initiate means.

20. An exterior rearview mirror for a vehicle comprising:

an electrochromic reflective element having an electrochromically active area, said electrochromic reflective element including a first glass plate having a front and rear surface, a second glass plate having a front and rear surface, and an electrochromic medium disposed between the rear surface of said first glass plate and the front surface of said second glass plate;

said front surface of said first glass plate being subject to frosting when exposed to an outdoor environment at a temperature of 0° C. or lower;

electrical means for supplying a signal to said reflective element in order to establish the reflectance level of said reflective element;

heating means on a surface of said second glass plate for heating said surface of said second glass plate in order to enhance coloration and bleaching of said electrochromic reflective element during low temperature operation and to defrost said front surface of said first glass plate, wherein said heating means includes one of a positive temperature coefficient material, a metal layer, and a transparent conductor layer, wherein said heating means dissipates power in the range of between 1.0 watts and 1.5 watts per square inch of said electrochromically active area;

control means for applying energy to said heating means wherein said control means includes a defrost initiate means that is manually actuated when frost is present on said front surface of said first glass plate; and

wherein said defrost initiate means includes timing means for removing energy from said heating means after a predetermined time following actuation of said defrost initiate means.

21. An exterior rearview mirror having a manually activated heating system for a vehicle comprising:

an electrochromic reflective element having an electrochromically active area, said electrochromic reflective element including a first glass plate having a from and rear surface, a second glass plate having a front and rear surface, and an electrochromic medium disposed between the rear surface of said first glass plate and the front surface of said second glass plate;

said front surface of said first glass plate being subject to frosting when exposed to an outdoor environment at a temperature of 0° C. or lower;

electrical means to achieve an electrochromic function for supplying a signal to said reflective element in order to establish the reflectance level of said reflective element;

heating means to achieve a defrosting function on said rear surface of said second glass plate for heating said rear surface of said second glass plate in order to enhance coloration and bleaching of said electrochromic reflective element during low temperature operation and to defrost said from surface of said first glass plate, wherein said heating means comprises a positive temperature coefficient material;

said heating means being electrically insulated from said electrochromic medium;

manually activated control means for applying energy in the form of direct current from an automobile power system to said heating means wherein said control means includes a defrost initiate means that is manually actuated when frost is present on said front surface of said first glass plate; and

wherein said defrost initiate means applies energy to said heating means independently of said electrical means in a manner that enables independent control over both the defrosting function and the electrochromic function and includes timing means for removing energy from said heating means after a predetermined time following actuation of said defrost initiate means.

22. The exterior rearview mirror of claim **21** wherein said electrochromic medium comprises an electrochemichromic medium.

23. The exterior rearview mirror of claim **22** wherein said positive temperature coefficient material comprises a positive temperature coefficient heater pad.

24. The exterior rearview mirror of claim **22** wherein said heating means further comprises a metal layer disposed between said positive temperature coefficient material and said rear surface of said second glass plate.

25. The exterior rearview mirror of claim **21** wherein said heating means further comprises a metal layer disposed between said positive temperature coefficient material and said rear surface of said second glass plate.

26. The exterior rearview mirror of claim **25** wherein said electrochromic medium comprises an electrochemichromic medium.

27. An exterior rearview mirror for a vehicle comprising:

an electrochromic reflective element having an electrochromically active area, said electrochromic reflective element including a first glass plate having a front and rear surface, a second glass plate having a front and rear surface, and an electrochromic medium disposed between the rear surface of said first glass plate and the front surface of said second glass plate;

said front surface of said first glass plate being subject to frosting when exposed to an outdoor environment at a temperature of 0° C. or lower;

electrical means for supplying a signal to said reflective element in order to establish the reflectance level of said reflective element;

heating means on said rear surface of said second glass plate for heating said rear surface of said second glass plate in order to enhance coloration and bleaching of said electrochromic reflective element during low temperature operation and to defrost said front surface of said first glass plate, wherein said heating means comprises a positive temperature coefficient material, wherein said heating means dissipates power in the range of between 1.0 watts and 1.5 watts per square inch of said electrochromically active area;

control means for applying energy to said heating means wherein said control means includes a defrost initiate means that is manually actuated when frost is present on said front surface of said first glass plate; and

wherein said defrost initiate means includes timing means for removing energy from said heating means after a predetermined time following actuation of said defrost initiate means.

28. An exterior rearview mirror for a vehicle comprising:

an electrochromic reflective element having an electrochromically active area, said electrochromic reflective element including a first glass plate having a front and rear surface, a second glass plate having a front and rear surface, and a electrochromic medium disposed between the rear surface of said first glass plate and the front surface of said second glass plate;

said front surface of said first glass plate being subject to frosting when exposed to an outdoor environment at a temperature of 0° C. or lower;

electric means for supplying a signal to said reflective element in order to establish the reflectance level of said reflective element;

heating means on said rear surface of said second glass plate for heating said rear surface of said second glass plate in order to enhance coloration and bleaching of said electrochromic reflective element during low temperature operation and to defrost said front surface of said first glass plate, wherein said heating means comprises a positive temperature coefficient material;

control means for applying energy to said heating means wherein said control means includes a defrost initiate means that is manual actuated when frost is present on said front surface of said first glass plate; and

wherein said defrost initiate means including timing means for removing energy from said heating means

after a predetermined time following actuation of said defrost initiate means wherein said heating means is adapted to preferentially heat a central portion of said electrochromically active area in order to promote rapid defrosting of said front surface of said first glass plate.

29. An exterior rearview mirror for a vehicle comprising:

an electrochromic reflective element having an electrochromically active area, said electrochromic reflective element including a first glass plate having a front and rear surface, a second glass plate having a front and rear surface, and an electrochromic medium disposed between the rear surface of said first glass plate and the front surface of said second glass plate, wherein said electrochromic medium comprises an electrochemichromic medium;

said front surface of said first glass plate being subject to frosting when exposed to an outdoor environment at a temperature of 0° C. or lower;

electrical means for supplying a signal to said reflective element in order to establish the reflectance level of said reflective element;

heating means on said rear surface of said second glass plate for heating said rear surface of said second glass plate in order to enhance coloration and bleaching of said electrochromic reflective element during low temperature operation and to defrost said front surface of said first glass plate, wherein said heating means comprises a positive temperature coefficient material, wherein said heating means dissipates power in the range of between 1.0 watts and 1.5 watts per square inch of said electrochromically active area;

control means for applying energy to said heating means wherein said control means includes a defrost initiate means that is manually actuated when frost is present on said front surface of said first glass plate; and

wherein said defrost initiate means includes timing means for removing energy from said heating means after a predetermined time following actuation of said defrost initiate means.

30. An exterior rearview mirror for a vehicle comprising:

an electrochromic reflective element having an electrochromically active area, said electrochromic reflective element including a first glass plate having a front and rear surface, a second glass plate having a front and rear surface, and an electrochromic medium disposed between the rear surface of said first glass plate and the front surface of said second glass plate, wherein said electrochromic medium comprises an electrochemichromic medium;

said front surface of said first glass plate being subject to frosting when exposed to an outdoor environment at a temperature of 0° C. or lower;

electrical means for supplying a signal to said reflective element in order to establish the reflectance level of said reflective element;

heating means on said rear surface of said second glass plate for heating said rear surface of said second glass plate in order to enhance coloration and bleaching of said electrochromic reflective element during low temperature operation and to defrost said front surface of said first glass plate, wherein said heating means comprises a positive temperature coefficient material and a metal layer disposed between said positive temperature coefficient material and said rear surface of said second glass plate, wherein said heating means dissipates power in the range of between 1.0 watts and 1.5 watts per square inch of said electrochromically active area;

control means for applying energy to said heating means wherein said control means includes a defrost initiate means that is manually actuated when frost is present on said front surface of said first glass plate; and

wherein said defrost initiate means includes timing means for removing energy from said heating means after a predetermined time following actuation of said defrost initiate means.

31. An exterior rearview mirror for a vehicle comprising:

an electrochromic reflective element having an electrochromically active area, said electrochromic reflective element including a first glass plate having a front and rear surface, a second glass plate having a front and rear, surface and an electrochromic medium disposed between the rear surface of said first glass plate and the front surface of said second glass plate;

said front surface of said first glass plate being subject to frosting when exposed to an outdoor environment at a temperature of 0° C. or lower;

electrical means for supplying a signal to said reflective element in order to establish the reflectance level of said reflective element;

heating means on said rear surface of said second glass plate for heating said rear surface of said second glass plate in order to enhance coloration and bleaching of said electrochromic reflective element during low temperature operation and to defrost said front surface of said first glass plate, wherein said heating means comprises a positive temperature coefficient material and a metal layer disposed between said positive temperature coefficient material and said rear surface of said second glass plate, wherein said heating means dissipates power in the range of between 1.0 watts and 1.5 watts per square inch of said electrochromically active area;

control means for applying energy to said heating means wherein said control means includes a defrost initiate means that is manually actuated when frost is present on said front surface of said first glass plate; and

wherein said defrost initiate means includes timing means for removing energy from said heating means after a predetermined time following actuation of said defrost initiate means.

* * * * *

UNITED STATES PATENT AND TRADEMARK OFFICE

CERTIFICATE OF CORRECTION

PATENT NO. : 5,610,756
DATED : March 11, 1997
INVENTOR(S) : Niall R. Lynam, Desmond J. O'Farrell, Kenneth L. Schierbeek and Michael A. Hansen

It is certified that error appears in the above-identified patent and that said Letters Patent is hereby corrected as shown below:

Column 10, claim 1,
Line 8, "from" should be -- front --.

Column 11, claim 15,
Line 19, "from" should be -- front --.

Column 12, claim 19,
Line 30, ":" should be -- ; -- after "lower".
Line 47, "from" should be -- front --.

Column 13, claim 21,
Line 24, "from" should be -- front --.
Line 40, "from" should be -- front --.

Signed and Sealed this

Eighth Day of January, 2002

Attest:

Attesting Officer

JAMES E. ROGAN
Director of the United States Patent and Trademark Office