US011969970B2

(12) **United States Patent**
Chen et al.

(10) **Patent No.: US 11,969,970 B2**
(45) **Date of Patent: Apr. 30, 2024**

(54) **ELECTROCHROMIC FILMS WITH EDGE PROTECTION**

(71) Applicant: **Furcifer Inc.**, Fremont, CA (US)

(72) Inventors: **Zhao Chen**, Camarillo, CA (US); **Jian Wang**, Fremont, CA (US); **Yan Zhou**, Fremont, CA (US)

(73) Assignee: **FURCIFER INC.**, Fremont, CA (US)

(*) Notice: Subject to any disclaimer, the term of this patent is extended or adjusted under 35 U.S.C. 154(b) by 0 days.

(21) Appl. No.: **18/152,033**

(22) Filed: **Jan. 9, 2023**

(65) **Prior Publication Data**

US 2023/0158778 A1 May 25, 2023

Related U.S. Application Data

(63) Continuation of application No. 16/190,723, filed on Nov. 14, 2018, now Pat. No. 11,571,878.

(51) **Int. Cl.**

G02F 1/153	(2006.01)
B32B 17/10	(2006.01)
G02F 1/1506	(2019.01)

(52) **U.S. Cl.**

CPC ***B32B 17/10*** (2013.01); ***B32B 17/10036*** (2013.01); ***B32B 17/10211*** (2013.01); ***B32B 17/10302*** (2013.01); ***B32B 17/10513*** (2013.01); ***B32B 17/10761*** (2013.01); ***G02F 1/1508*** (2013.01); ***G02F 1/1533*** (2013.01)

(58) **Field of Classification Search**

CPC G02F 1/1533; G02F 1/1508; G02F 1/153; G02F 1/161; G02F 2201/50; G02F 2201/1536

See application file for complete search history.

(56) **References Cited**

U.S. PATENT DOCUMENTS

5,406,414	A	4/1995	O'farrell et al.
5,818,625	A	10/1998	Forgette et al.
2012/0013969	A1	1/2012	Wang et al.
2013/0010347	A1	1/2013	Tajima et al.
2015/0301367	A1	10/2015	Mennig
2015/0323849	A1	11/2015	Han
2016/0282645	A1	9/2016	Wang et al.
2016/0357082	A1	12/2016	Kubo et al.

(Continued)

FOREIGN PATENT DOCUMENTS

CN	104698715	A	6/2015
JP	H11316395	A	11/1999

(Continued)

OTHER PUBLICATIONS

Search Report for European Application No. 19206363.4 dated Feb. 20, 2020, 9 pages.

(Continued)

Primary Examiner — Jack Dinh

(57) **ABSTRACT**

The present application discloses a method for preparing an electrochromic device. The method includes placing an edge protection material on a first and second substrates, placing a first and second interlayers respectively within the edge protection material on the first and second substrates, wherein the edge protection material surrounds edges of the first and second interlayers, and interposing an electrochromic film between the first and second interlayers. The edge protection material prevents chemicals in the first and second interlayers from entering into the electrochromic film.

14 Claims, 9 Drawing Sheets

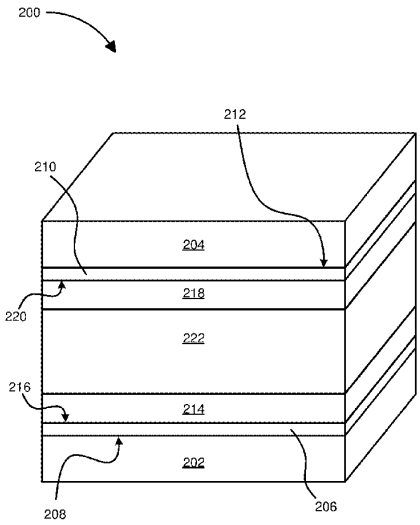

(56) **References Cited**

U.S. PATENT DOCUMENTS

2017/0298682	A1	10/2017	Wang et al.
2017/0299932	A1	10/2017	Wang et al.

FOREIGN PATENT DOCUMENTS

JP	2000231125	A	8/2000
JP	2001033830	A	2/2001
JP	2011095406	A	5/2011
WO	2010/032068	A1	3/2010
WO	2014/134714	A2	9/2014

OTHER PUBLICATIONS

Office Action for European Application No. 19206363.4 dated Apr. 30, 2021, 5 pages.
First Search for Chinese Application No. 201911095986.4 dated Jul. 15, 2022. [** new].
Extended European Search Report for European Patent Application No. 23164353.7 dated Jun. 9, 2023.
Supplemental Search Report for Chinese Application No. 201911095986.4 dated Feb. 2, 2023.
Non-Final Office Action for U.S. Appl. No. 18/326,866 mailed on Dec. 20, 2023.

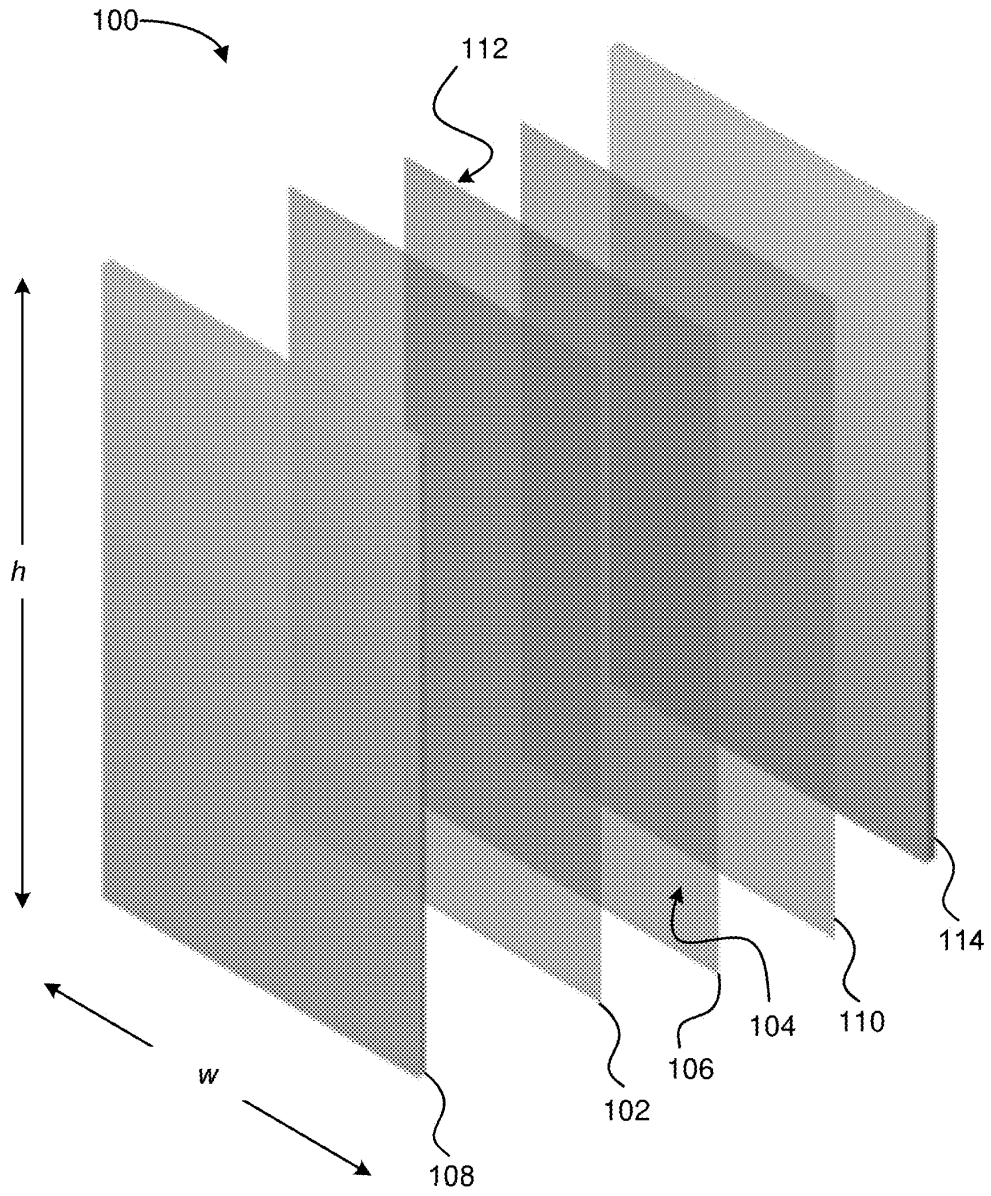

FIG. 1

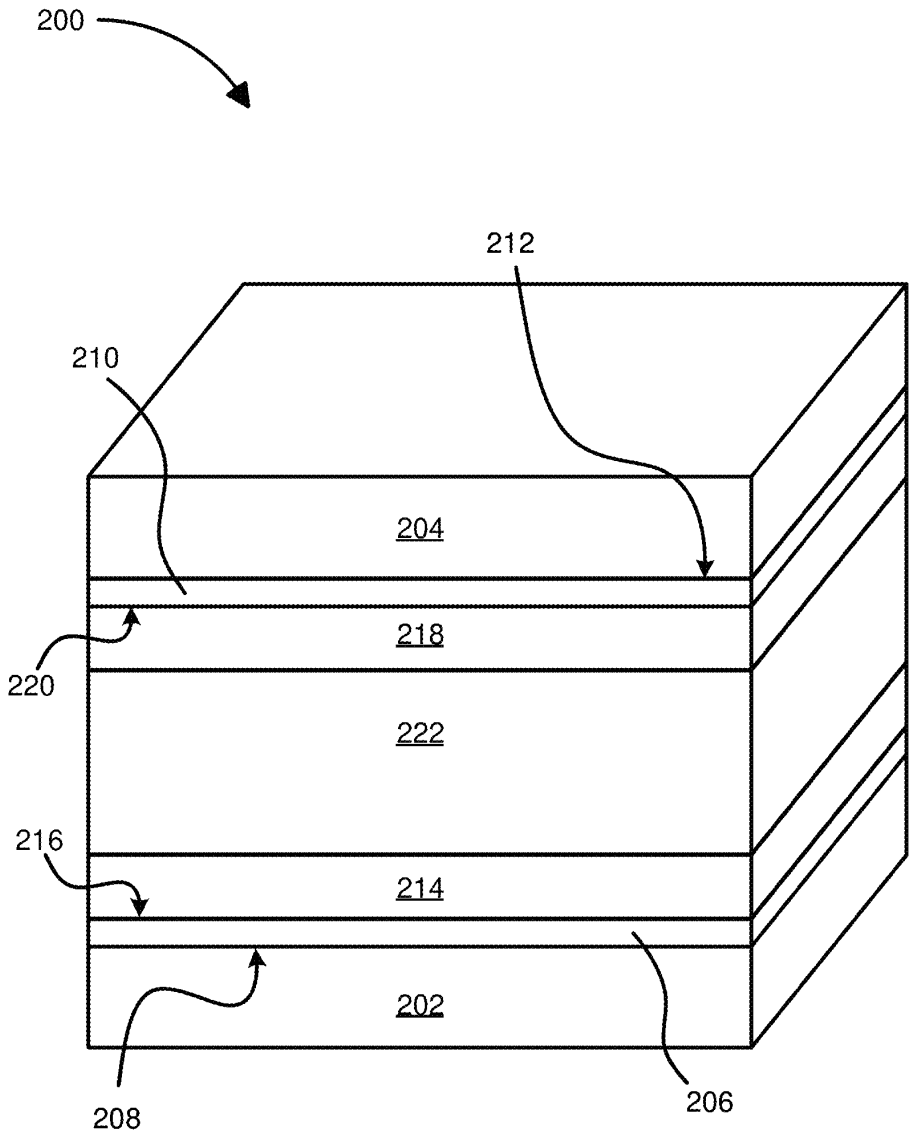

FIG. 2

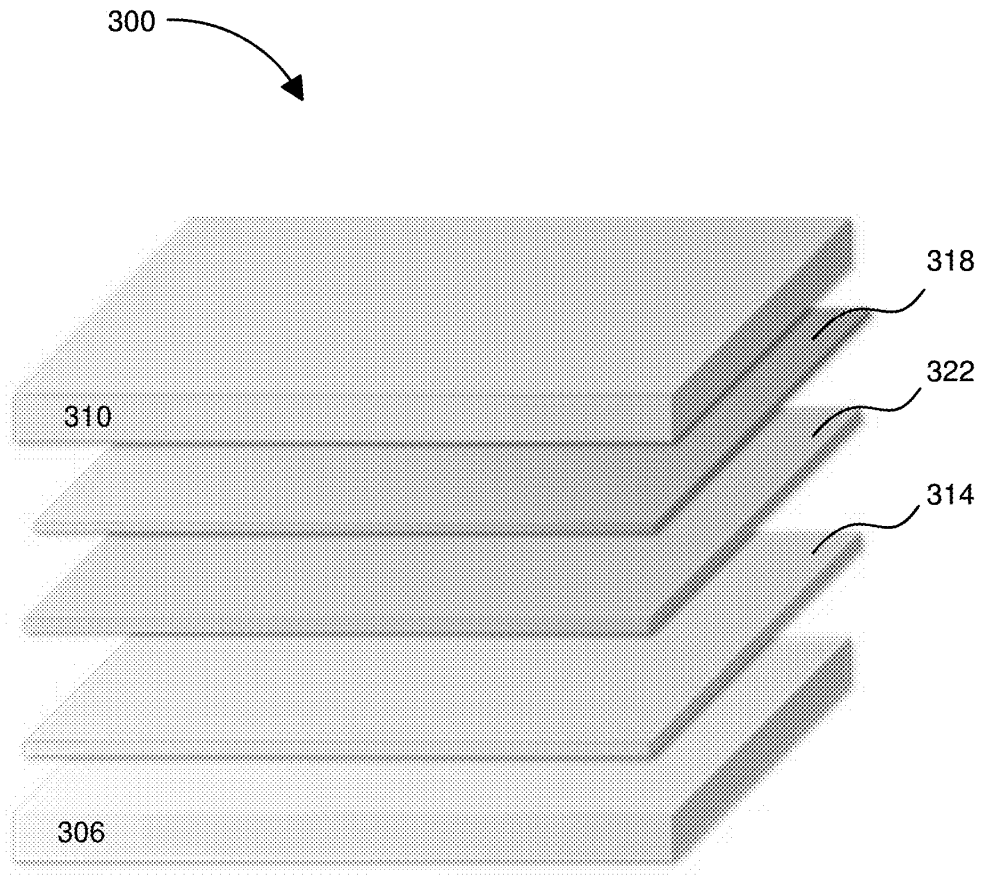

FIG. 3

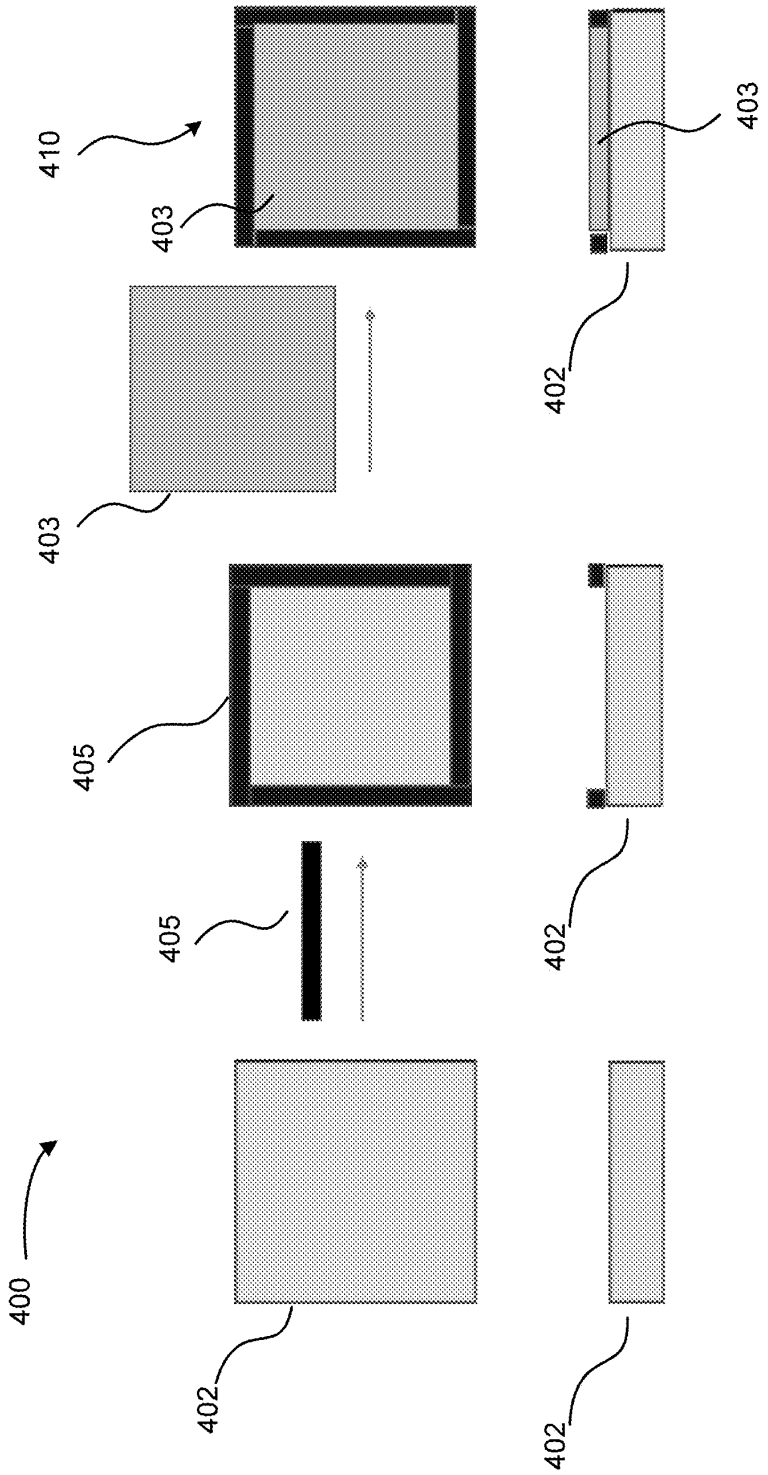

FIG. 4A

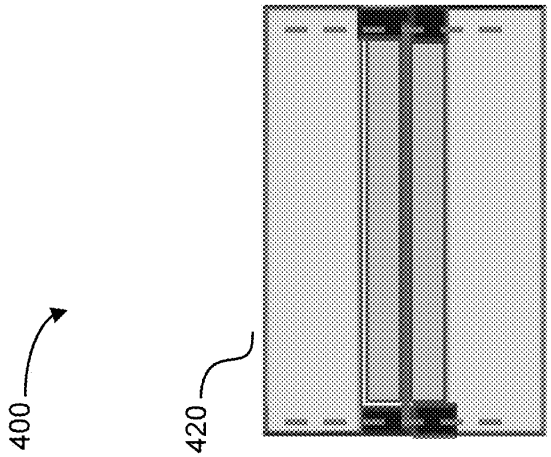

FIG. 4C

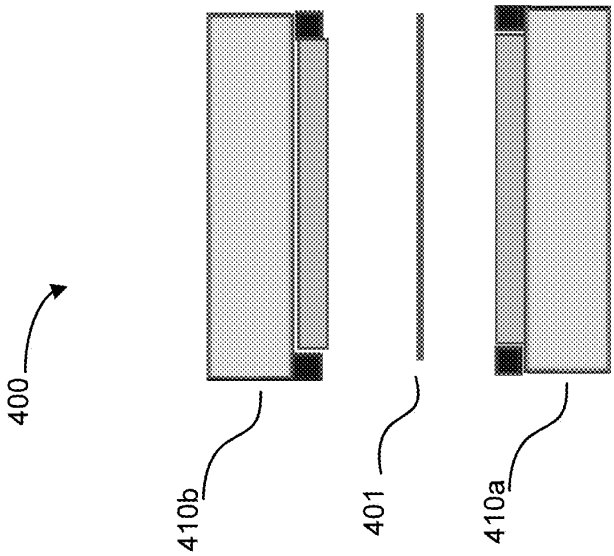

FIG. 4B

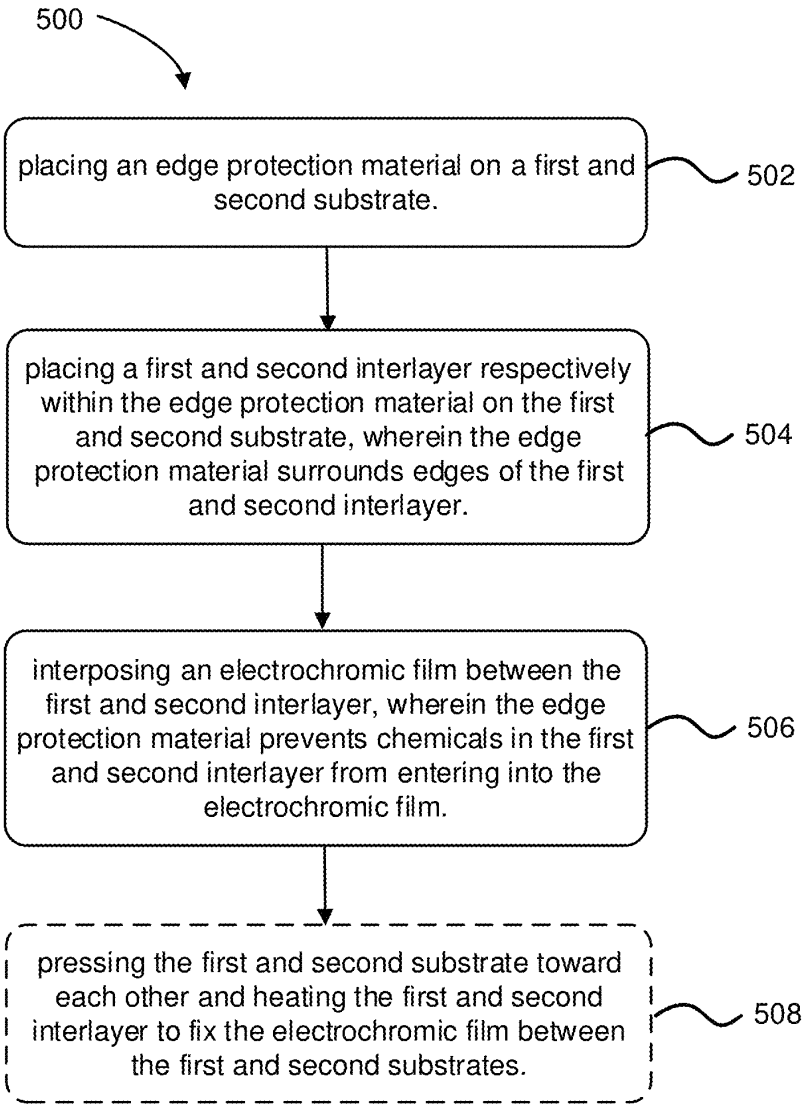
500
placing an edge protection material on a first and second substrate.
502
placing a first and second interlayer respectively within the edge protection material on the first and second substrate, wherein the edge protection material surrounds edges of the first and second interlayer.
504
interposing an electrochromic film between the first and second interlayer, wherein the edge protection material prevents chemicals in the first and second interlayer from entering into the electrochromic film.
506
pressing the first and second substrate toward each other and heating the first and second interlayer to fix the electrochromic film between the first and second substrates.
508

FIG. 5

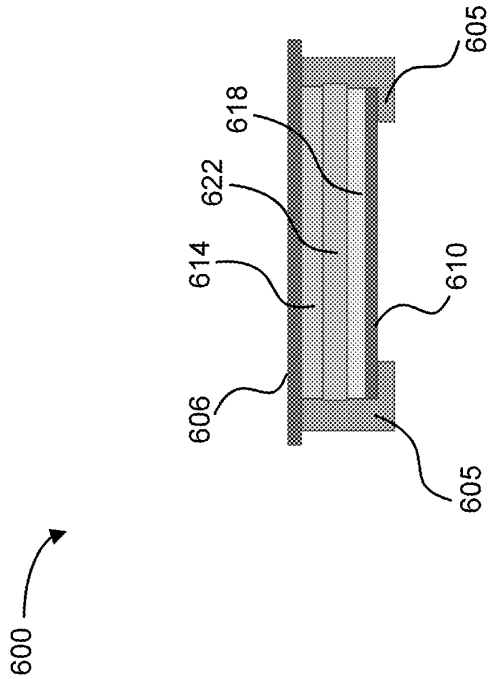

FIG. 6

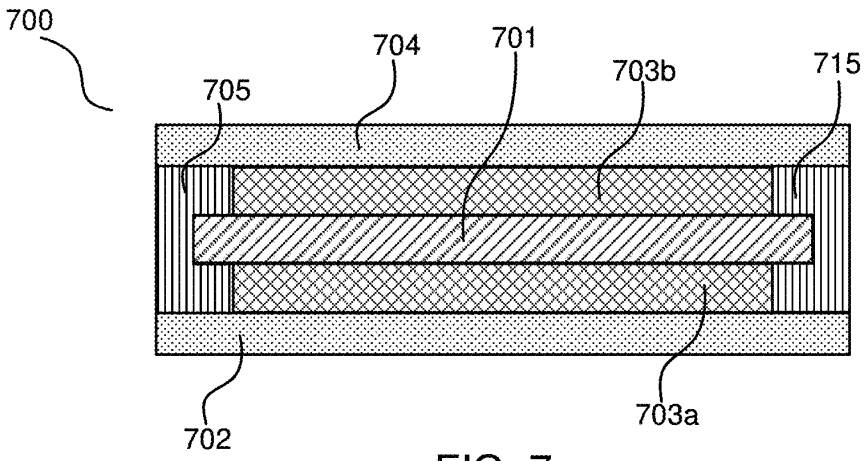

FIG. 7

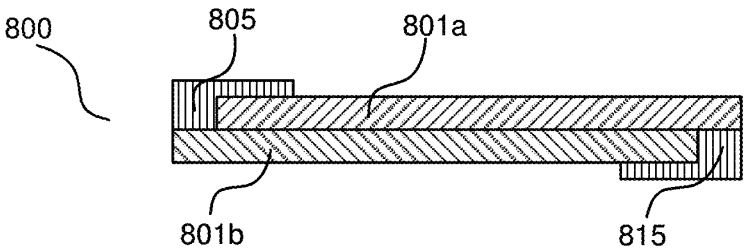

FIG. 8

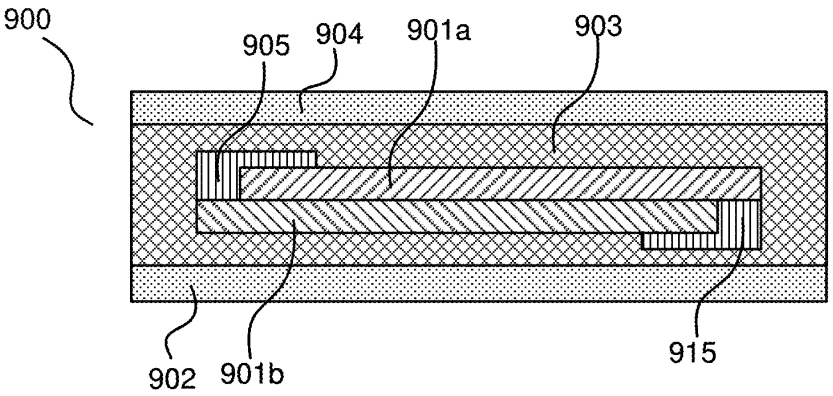

FIG. 9

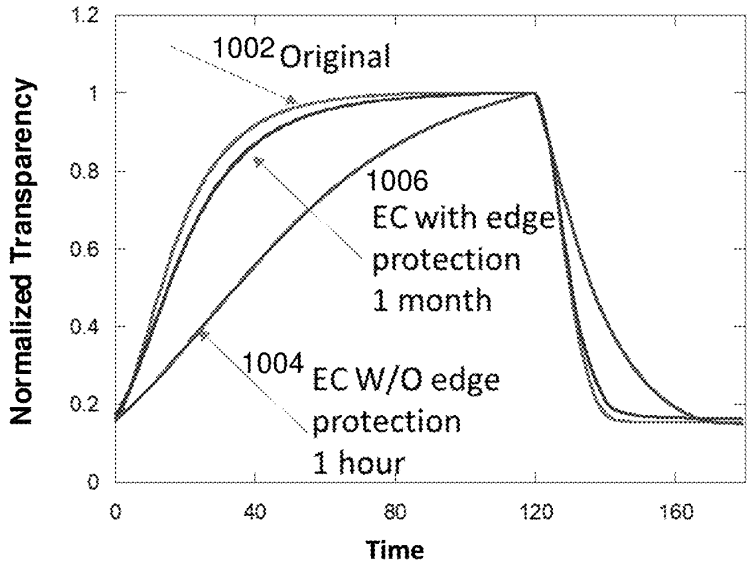

FIG. 10A

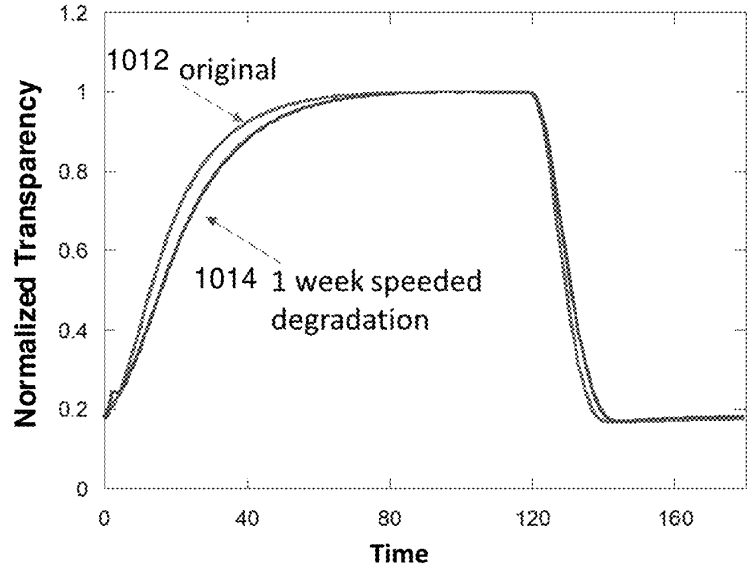

FIG. 10B

ELECTROCHROMIC FILMS WITH EDGE PROTECTION

CROSS-REFERENCE OF RELATED APPLICATION(S)

This application is a continuation of U.S. patent application Ser. No. 16/190,723, filed Nov. 14, 2018 and titled "ELECTROCHROMIC FILMS WITH EDGE PROTECTION". The entire content of the above-identified application is incorporated herein by reference.

FIELD OF THE INVENTION

The invention generally relates to electrochromic devices, and in particular, to electrochromic devices with edge protection and methods for making the same.

BACKGROUND

Electrochromism generally refers to a reversible change in optical properties of a material upon application of a potential. In particular, electrochromic materials exhibit a reversible color change due to an electrochemical reduction-oxidation (redox) reaction caused by application of an electric field.

Electrochromic materials are useful for a variety of applications, including photovoltaic devices, field effect transistors, organic light emitting diodes, general printed electronics, anti-glare windows, display systems, etc.

Usually, electrochromic materials are sandwiched between rigid substrates to make devices. The electrochromic films based on flexible substrates have advantages over the traditional electrochromic glasses in terms of weight, ease of transportation, ability to apply on curved surface, etc.

For applications involving smart window technology, the electrochromic materials need to be integrated with a glass substrate (e.g., a glass window) to be serviceable. The integration process usually requires that the electrochromic film be sandwiched between two glass panels with interlayers such as polyvinyl butyral (PVB) and SentryGlas etc. Then, those packages would be pressed and heated at certain pressure and temperature. After the lamination process, the interlayers will be cured and will fix the electrochromic film between glass panels. There are certain additives within the interlayers for the purpose of chemical and physical property modifications. Those additives can infiltrate into the multilayer electrochromic films and adversely affect the electrochromic films. As a result, the performance and lifetime of electrochromic films can be severely compromised.

Therefore, there is a need for an improved design of electrochromic films to address the above and other problems.

SUMMARY

The present disclosure provides a method of preparing an electrochromic film having edge protection to protect the edges of the electrochromic film from being infiltrated by undesired materials as well as oxygen and moisture. An electrochromic film may include a first electrode, a second electrode, an electrochromic material deposited on at least the first electrode, a charge storage layer deposited on the second electrode, and a solid polymer electrolyte disposed between the electrochromic material and the charge storage layer.

An electrochromic film generally may be interposed between two interlayers and laminated between two glass panels. In some embodiments, the edges of electrochromic film and the interlayers are covered by an edge protection material protecting the electrochromic film from being exposed to undesired materials from the interlayers and from the ambient environment. Those undesired materials include certain additives inside the interlayers and oxygen and moisture from the ambient environment, which may adversely affect the performance and lifetime of the electrochromic film.

According to one embodiment of the present disclosure, a method for preparing an electrochromic device includes placing an edge protection material on a first and second substrates, placing a first and second interlayers respectively within the edge protection material on the first and second substrates, wherein the edge protection material surrounds edges of the first and second interlayers, interposing an electrochromic film between the first and second interlayers, wherein the edge protection material prevents chemicals in the first and second interlayers from entering into the electrochromic film. The method may also include pressing the first and second substrates toward each other and heating the first and second interlayers to fix the electrochromic film between the first and second substrates.

According to another embodiment of the present disclosure, an electrochromic film includes a first electrode, a second electrode, an electrochromic material deposited on at least the first electrode, a charge storage layer deposited on the second electrode, and a solid polymer electrolyte disposed between the electrochromic material and the charge storage layer. In this embodiment, at least edges of the electrochromic material are covered by an edge protection material.

According to yet another embodiment of the present disclosure, an electrochromic device includes a first glass panel, a first interlayer on the first glass panel, a second glass panel, a second interlayer on the second glass panel, and an electrochromic film between the first interlayer and the second interlayer. The electrochromic film may include a first electrode, a second electrode, an electrochromic material deposited on at least the first electrode, a charge storage layer deposited on the second electrode, and a solid polymer electrolyte disposed between the electrochromic material and the charge storage layer. At least edges of the electrochromic material are covered by an edge protection material.

BRIEF DESCRIPTION OF THE DRAWINGS

Preferred and non-limiting embodiments of the invention may be more readily understood by referring to the accompanying drawings in which:

FIG. **1** is a simplified schematic of a laminated structure having an electrochromic film disposed therein, according to one exemplary embodiment.

FIG. **2** is a simplified schematic of an electrochromic film, according to one exemplary embodiment.

FIG. **3** is a perspective view of an electrochromic film, according one exemplary embodiment.

FIGS. **4**A-**4**C illustrate a method of preparing an electrochromic film with edge protection according to an exemplary embodiment.

FIG. **5** illustrates a flowchart of a method for preparing an electrochromic device according to an exemplary embodiment.

FIG. **6** illustrate an electrochromic film with edge protection according to an exemplary embodiment.

FIG. **7** illustrates a laminated electrochromic film with edge protection according to one exemplary embodiment.

FIG. **8** illustrates an unlaminated electrochromic film with edge protection according to another exemplary embodiment.

FIG. **9** illustrates another laminated electrochromic film with edge protection according to another exemplary embodiment.

FIG. **10**A illustrates performance and lifetime comparison of a laminated electrochromic film with edge protection according to an embodiment and one without edge protection.

FIG. **10**B illustrates performance and lifetime comparison of an unlaminated electrochromic film with edge protection according to an embodiment and one without edge protection.

DETAILED DESCRIPTION OF THE PREFERRED EMBODIMENTS

In the following description, certain specific details are set forth in order to provide a thorough understanding of various embodiments of the invention. However, one skilled in the art will understand that the invention may be practiced without these details. Moreover, while various embodiments of the invention are disclosed herein, many adaptations and modifications may be made within the scope of the invention in accordance with the common general knowledge of those skilled in this art. Such modifications include the substitution of known equivalents for any aspect of the invention in order to achieve the same result in substantially the same way.

Unless the context requires otherwise, throughout the present specification and claims, the word "comprise" and variations thereof, such as, "comprises" and "comprising" are to be construed in an open, inclusive sense, that is as "including, but not limited to." Recitation of numeric ranges of values throughout the specification is intended to serve as a shorthand notation of referring individually to each separate value falling within the range inclusive of the values defining the range, and each separate value is incorporated in the specification as it were individually recited herein. Additionally, the singular forms "a," "an" and "the" include plural referents unless the context clearly dictates otherwise.

Reference throughout this specification to "one embodiment" or "an embodiment" means that a particular feature, structure or characteristic described in connection with the embodiment is included in at least one embodiment of the present invention. Thus, the appearances of the phrases "in one embodiment" or "in an embodiment" in various places throughout this specification are not necessarily all referring to the same embodiment, but may be in some instances. Furthermore, the particular features, structures, or characteristics may be combined in any suitable manner in one or more embodiments.

A simplified schematic of a laminated structure with an electrochromic film interposed therein is shown in FIG. **1**, according to one exemplary embodiment. For clarity purposes only, the various components of the laminated structure (e.g., substrates, adhesive layers, and electrochromic film) are shown spaced apart.

As shown in FIG. **1**, the laminated structure **100** includes a first adhesive interlayer **102** interposed between a first surface **104** of an electrochromic film **106** and a first substrate **108**. The laminated structure **100** also includes a second adhesive interlayer **110** interposed between a second surface **112** of the electrochromic film **106** and a second substrate **114**. As seen in the embodiment of FIG. **1**, the first and second surfaces **104**, **112** correspond to opposing surfaces of the electrochromic film **106**.

The first and/or second adhesive interlayers **102**, **110** may include a material (e.g., a thermosetting polymer material) configured to securely bond (e.g., cross-link) the electrochromic film **106** with the first and second substrates **108**, **114**. As such, the first and/or second adhesive interlayers **102**, **110** are configured to keep the laminated structure **100** together even when shattered/broken, and prevent the laminated structure **100** from breaking up into large, sharp pieces.

An exemplary, non-limiting schematic of an electrochromic film **200** is shown in FIG. **2**, according to one embodiment. It is important to note that the electrochromic film **200** of FIG. **2** may be implemented in combination with other devices/features/components described herein, such as those described with reference to other embodiments/aspects. The electrochromic film **200** may be used in various applications and/or in permutations, which may or may not be noted in the illustrative embodiments/aspects described herein. For instance, the electrochromic film **200** may include more or less features/components than those shown in FIG. **2**, in some embodiments. Additionally, unless otherwise specified, one or more components of the electrochromic film **200** may be of conventional material, design, and/or fabricated using known techniques (e.g., sputtering, chemical vapor deposition (CVD), physical vapor deposition (PVD), plasma-enhanced chemical vapor deposition (PECVD), spray coating, slot-die coating, dip coating, spin coating, printing, etc.), as would be appreciated by skilled artisans upon reading the present disclosure.

As shown in FIG. **2**, the electrochromic film **200** includes a first transparent substrate **202** and a second transparent substrate **204** in spaced, parallel relation with each other. The first and second substrates **202**, **204** may have the same or different dimensions, comprise the same or different materials, etc. Suitable materials for the first substrate **202** and/or the second substrate **204** may include, but are not limited to, glass, polymeric materials, plastic materials, and/or other materials which are transparent in at least part of the visible region of the electromagnetic spectrum. In some embodiments, the first and second substrates **202**, **204** may comprise glass.

As also shown in FIG. **2**, a first transparent electrically conductive film **206** is deposited on the interior surface **208** of the first substrate **202** to act as an electrode. A second transparent electrically conductive film **210** is also deposited on the interior surface **212** of the second substrate **204** to act as an electrode. The first and second electrically conductive films **206**, **210** may have the same or different dimensions, comprise the same or different material, etc. The first and second electrically conductive films **206**, **210** may also each independently have a single layer or multilayer structure. Suitable materials for the first and second electrically conductive films **206**, **210** may include, but are not limited to, tin doped indium oxide (ITO), fluorine doped indium oxide, antimony doped indium oxide, zinc doped indium oxide, aluminum doped zinc oxide, silver nanowires, metal mesh, combinations thereof, and/or other such transparent material exhibiting sufficient electrical conductance. In preferred aspects, the first and second electrically conductive films **206**, **210** may each include an electrode layer including tin doped indium oxide (ITO).

The electrochromic device **200** may additionally include an electrical power supply (not shown) configured to supply voltage between the first and second electrically conductive films **206**, **210**.

As further shown in FIG. **2**, a layer **214** of electrochromic material is deposited on the interior surface **216** of the first electrically conductive film **206**. The layer **214** of electrochromic material is configured to cause a reversible color change upon reduction (gain of electrons) or oxidation (loss of electron) introduced by an applied electrical current. In some embodiments, the layer **214** of electrochromic material may be configured to change from a transparent state to a colored state, or from a colored state to another colored state, upon oxidation or reduction. In some embodiments, the layer **214** of electrochromic material may be a polyelectrochromic material in which more than two redox states are possible, and may thus exhibit several colors.

In some embodiments, the layer **214** of electrochromic material may comprise an organic electrochromic material, an inorganic electrochromic material, a mixture of both, etc. The layer **214** of electrochromic material may also be a reduction colored material (i.e., a material that becomes colored upon acquisition of electrons), or an oxidation colored material (i.e., a material that becomes colored upon the loss of electrons).

In some embodiments, the layer **214** of electrochromic material may include a metal oxide such as MoO_3, V_2O_5, Nb_2O_5, WO_3, TiO_2, $Ir(OH)_x$, $SrTiO_3$, ZrO_2, La_2O_3, $CaTiO_3$, sodium titanate, potassium niobate, combinations thereof, etc. In some embodiments, the layer **214** of electrochromic material may include a conductive polymer such as poly-3, 4-ethylenedioxy thiophene (PEDOT), poly-2,2'-bithiophene, polypyrrole, polyaniline (PANI), polythiopene, polyisothianaphthene, poly(o-aminophenol), polypyridine, polyindole, polycarbazole, polyquinone, octacyanophthalocyanine, combinations thereof, etc. Moreover, in some embodiments, the layer **214** of electrochromic material may include materials, such as viologen, anthraquinone, phenocyazine, combinations thereof, etc. Additional examples of electrochromic materials, particularly those including multicolored electrochromic polymers, may be found in U.S. patent application Ser. No. 15/399,839, filed Jan. 6, 2017, the entirety of which is herein incorporated by reference.

As additionally shown in FIG. **2**, a charge storage layer **218** is deposited on the interior surface **220** of the second electrically conductive film **210**. Suitable materials for the charge storage layer **218** may include, but are not limited to, vanadium oxide, binary oxides (e.g., CoO, IrO_2, MnO, NiO, and PrOA ternary oxides (e.g., $Ce_xV_yO_z$), etc.

In some embodiments, the charge storage layer **218** may be replaced with an optional second layer of electrochromic material. This optional second layer of electrochromic material may have the same or different dimensions, comprise the same or different composition, etc., as the first layer **214** of electrochromic material.

The electrochromic device **200** also includes an electrolyte layer **222** positioned between the layer **214** of electrochromic material and the charge storage layer **218**. In some embodiments, the electrolyte layer **222** may include a liquid electrolyte as known in the art. In some embodiments, the electrolyte layer **222** may include a solid state electrolyte, including but not limited to, Ta_2O_5, MgF, Li_3N, $LiPO_4$, $LiBO_2$—Li_2SO_4, etc. In some embodiments, the electrolyte layer **222** may include a polymer based electrolyte comprising an electrolyte salt (e.g., LiTFSI, $LiPF_6$, $LiBF_4$, $LiClO_4$, $LiCF_3SO_3$, $LiN(CF_3SO_2)_2$, LiSbFg, $LiAsF_6$, $LiN(CF_3CF_2SO_2)_2$, $(C_2H_5)_4NBF_4$, $(C_2H_5)_3CH_3NBF_4$, LiI, etc.), a polymer matrix (e.g., polyethylene oxide, poly(vinylidene fluoride (PVDF), poly(methyl methacrylate) (PMMA), polyethylene oxide (PEO), poly(acrylonitrile) (PAN), polyvinyl nitrile, etc.), and one or more optional plasticizers (e.g., glutaronitrile, succinonitrile, adiponitrile, fumaronitrile, etc.). Additional examples of electrolyte materials, particularly those including solid polymer electrolytes, may be found in U.S. patent application Ser. No. 15/399,852, filed Jan. 6, 2017 and Ser. No. 15/487,325, filed Apr. 13, 2017, the entirety of which is herein incorporated by reference.

FIG. **3** is a perspective view of an electrochromic film **300**, according one exemplary embodiment. The difference between FIG. **2** and FIG. **3** is that in FIG. **3** only the electrochromic film **300** is shown in a perspective view, without the first transparent substrate **202** and the second transparent substrate **204** from FIG. **2**. Similar to FIG. **2**, the electrochromic film **300** includes a first transparent electrically conductive film **306** and a second transparent electrically conductive film **310**. Between the first transparent electrically conductive film **306** and the second transparent electrically conductive film **310**, the electrochromic film **300** further includes an electrolyte layer **322** positioned between an electrochromic material layer **314** and a charge storage layer **318**. In some embodiments, the polymer electrolyte layer **322** is a solid polymer electrolyte and the solid polymer electrolyte includes an electrolyte salt and a polymer matrix as discussed above with respect to the embodiment in FIG. **2**.

FIGS. **4**A-**4**C illustrate a method **400** of preparing a laminated electrochromic device with edge protection according to one exemplary embodiment. FIG. **4**A illustrates a process of making a glass panel with edge protection for laminating with an electrochromic film. In FIG. **4**A, a glass panel **402** is first prepared. Then four stripes of edge seal **405** made of an edge protection material are positioned on each of the four edges and on top of the glass panel **402**. The edge protection material may be selected from polyvinyl siloxane (PVS), Sentryglas, thermoplastic polyurethane (TPU), ethylene-vinyl acetate (EVA), etc. Next an interlayer **403** is placed on the center of the glass panel **402**, within the area confined by the four stripes of edge seal **405** to form a first interlayer-substrate portion **410**. The interlayer **403** may be made of polyvinyl butyral (PVB), UV Extraprotect PVB, or the like. As mentioned, the interlayer may contain undesired chemicals that may adversely affect the performance and lifetime of the electrochromic film. Usually, those chemicals may infiltrate the electrochromic film through the joint of the films, often via the electrolyte layer. With the edge protection, the interlayer **403**'s edges are sealed and the chemicals will not be able to enter into the electrochromic film. The same process can be used to form another interlayer-substrate. As shown in FIG. **4**B, two interlayer-substrate portions **410***a*, **410***b* are formed, each having an interlayer surrounded by edge protection materials. An electrochromic film **401** is positioned and laminated between the two interlayer-substrate portions **410***a*, **410***b*. The electrochromic film **401** can be made as described above with reference to FIGS. **1**-**3**. In FIG. **4**C, an electrochromic film **420** with edge protection laminated within two glass panels are shown. The interlayers can be cured by pressing glass panels and heating the electrochromic device.

FIG. **5** illustrates a flowchart **500** summarizing the steps shown in FIGS. **4**A-**4**C. In step **502**, an edge protection material is placed on a first and second substrates. In step **504**, placing a first and second interlayers respectively within the edge protection material on the first and second

substrates, wherein the edge protection material surrounds edges of the first and second interlayers. In step **506**, interposing an electrochromic film between the first and second interlayers. The edge protection material may prevent chemicals in the first and second interlayers from entering into the electrochromic film. The method **500** may also include an optional step **508** of pressing the first and second substrates toward each other and heating the first and second interlayers to fix the electrochromic film between the first and second substrates.

FIG. **6** is a sectional view **600** of the two electrochromic films **606** and **610** where their joint and edges are covered by an edge projection material, e.g., a layer of epoxy **605**. In FIG. **6**, the two electrochromic films **606** and **610** are sandwiched with an electrochromic material layer **614**, an electrolyte layer **622**, and a charge storage layer **618**. After curing with heat or ultraviolet light, the epoxy **605** can work as an effective oxygen and moisture blocker. Using this method, an electrochromic film roll can be stored in an ambient environment for much longer time without sacrificing performance and lifetime. The epoxy can also be replaced by other suitable materials. In some embodiments, at least edges of one of the first electrode and second electrode, the electrochromic material, the solid polymer electrolyte, and the charge storage layer are covered by the edge protection material.

FIG. **7** illustrates a laminated electrochromic device **700** with edge protection according to one exemplary embodiment. The laminated electrochromic device **700** includes a first substrate **702** (e.g., a glass panel) at the bottom, a second substrate **704** (e.g., a glass panel) at the top, a first interlayer **703***a* positioned above the first substrate **702**, a second interlayer **703***b* positioned below the second substrate **704**, an electrochromic film **701**, and edge protection materials **705**, **715** between the first substrate **702** and the second substrate **704** and around the interlayers **703***a* and **703***b* and the electrochromic film **701**. The edge protection materials **705**, **715** are compatible with the electrochromic film **701** and the substrates but resistant to the chemicals of the interlayers **703***a* and **703***b*. The electrochromic film **701** is prepositioned so that its edges fit the edge protection materials **705**, **715**. Followed by normal laminating process such as autoclave, the electrochromic film **701**'s edges will be protected by the edge protection materials **705**, **715**.

FIG. **8** illustrates an electrochromic film **800** with edge protection according to another exemplary embodiment. The electrochromic film in FIG. **8** includes two sides **801***a* and **801***b*, one as an anode and the other as a cathode. The upper side **801***a* is covered by an edge protection material on the left side and the lower side **801***b* is covered by an edge protection material on the left side. The electrochromic film **800** with edges covered can be rolled and easily stored in an ambient environment for much longer time without sacrificing performance and lifetime.

FIG. **9** illustrates another electrochromic device **900** with edge protection according to another exemplary embodiment. Similar to FIG. **8**, the electrochromic film in FIG. **9** includes two sides **901***a* and **901***b*, one as an anode and the other as a cathode. The edges of the electrochromic film **901***a* and **901***b* are covered by an edge protection material, e.g., a layer of epoxy **905** and **915**. After curing with heat or ultraviolet light, the epoxy **905** and **915** can work as an effective oxygen and moisture blocker. Then, the electrochromic film can be laminated between two substrates (e.g., glass panels) with a lamination process as described above. Similar to FIG. **7**, the laminated electrochromic device **900** includes a first substrate **902** (e.g., a glass panel), a second substrate **904** (e.g., a glass panel), an interlayer **903** between the first substrate **902** and the second substrate **904**, and the electrochromic film with edge protection laminated within the interlayer **903**.

In some embodiments, the edge protection material, e.g., the epoxy **805**/**815**/**905**/**915**, may be electrically conductive so that it can function as the electrodes in the above-described embodiments. By using an electrically conductive material as the edge protection material, the electrochromic film fabrication process can save one step with respect to fabricating the electrodes. Alternatively, the electrically conductive edge protection material can conduct current to the electrode layer and/or charge storage layer.

FIG. **10**A illustrates performance and lifetime comparison of a laminated electrochromic film with edge protection according to an embodiment and one without edge protection. The curve **1002** is the original performance of a laminated electrochromic film, i.e., performance without degradation. It shows a behavior of normalized transparency as a function of time for a laminated electrochromic film with no degradation. The curve **1004** shows a behavior of normalized transparency as a function of time of a laminated electrochromic film without edge protection. The curve **1006** shows a behavior of normalized transparency as a function of time of a laminated electrochromic film with edge protection. With comparison among curves **1002**, **1004** and **1006** in FIG. **10**A, one can find that the device without edge protection (curve **1004**) shows very poor stability. After 1 h speeded degradation at 100° C., the device already slows down in switch response. In contrast, the device with edge protection (curve **1006**) only shows limited sign of degradation after 1 month of speeded degradation stress test. Therefore, with an edge protection, a laminated electrochromic film device can be better protected from degradation.

FIG. **10**B illustrates performance and lifetime comparison of an unlaminated electrochromic film with edge protection according to an embodiment and one without edge protection. The curve **1012** is the original performance of an unlaminated electrochromic film, i.e., performance without degradation. It shows a behavior of normalized transparency as a function of time for an unlaminated electrochromic film with no degradation. The curve **1014** shows a behavior of normalized transparency as a function of time of an unlaminated electrochromic film with edge protection. As shown in FIG. **10**B, after 1 week of speeded degradation stress, the device with edge protection (curve **1014**) still holds a reasonable good switch speed, i.e., similar to the original curve **1012**. Therefore, with an edge protection, an unlaminated electrochromic film can be protected from degradation, leaving a long process window for further lamination process.

This specification describes protecting edges of an electrochromic film that is usually fabricated by a roll-to-roll process with low cost. Since the electrochromic films need to be laminated between substrates (e.g., two glass panels) in their actual application, such as smart windows, without using the methods described above, the selection of lamination interlayer materials would be limited and the storage and transportation would require much more dedicated environment and conditions. The embodiments described above are useful in facilitating the application of electrochromic films in the window industry.

The invention described and claimed herein is not to be limited in scope by the specific preferred embodiments disclosed herein, as these embodiments are intended as illustrations of several aspects of the invention. Indeed, various modifications of the invention in addition to those

shown and described herein will become apparent to those skilled in the art from the foregoing description. Such modifications are also intended to fall within the scope of the appended claims.

What is claimed is:

1. An electrochromic device comprising:

a first and a second interlayers;

an electrochromic layer disposed between the first and the second interlayers, wherein the electrochromic layer comprises:

a first and second transparent electrically conductive layers, and

at least one electrochromic material layer disposed between the first and second transparent electrically conductive layers;

a first edge protection seal sealing all edges of the first interlayer; and

a second edge protection seal sealing all edges of the second interlayer, wherein:

the electrochromic layer is positioned between the first and second interlayers, edges of the electrochromic layer extend beyond boundaries of the first and the second interlayers and fit into the first and second edge protection seals, and the first and second edge protection seals jointly seal all edges of the electrochromic layer.

2. The device of claim **1**, wherein the first and second edge protection seals are resistant to chemicals from the first and the second interlayers, and the first and second edge protection seals are electrically conductive and functioning as electrodes of the electrochromic layer.

3. The device of claim **1**, wherein the first and second edge protection seals are epoxy.

4. The device of claim **1**, wherein the first and second edge protection seals include polyvinyl siloxane (PVS), thermoplastic polyurethane (TPU), or ethylene-vinyl acetate (EVA).

5. The device of claim **1**, wherein the electrochromic layer further comprises a solid polymer electrolyte comprising an electrolyte salt.

6. The device of claim **1**, wherein the electrochromic layer further comprises an electrode layer including tin doped indium oxide (ITO).

7. The device of claim **1**, further comprising:

a charge storage layer; and

a solid polymer electrolyte disposed between the electrochromic layer and the charge storage layer.

8. The device of claim **7**, wherein the solid polymer electrolyte comprises an electrolyte salt and a polymer matrix.

9. The device of claim **7**, wherein the electrochromic film further comprises an electrode layer including tin doped indium oxide (ITO).

10. The device of claim **1**, wherein:

the first edge protection seal comprises a first plurality of stripes of edge seal; and

the second edge protection seal comprises a second plurality of stripes of edge seal.

11. The device of claim **10**, wherein:

the first plurality of stripes of edge seal comprise four stripes of edge seal disposed at and sealing four edges of the first interlayer; and

the second plurality of stripes of edge seal comprise four stripes of edge seal disposed at and sealing four edges of the second interlayer.

12. The device of claim **1**, wherein the first interlayer and the second interlayer are made from polyvinyl butyral (PVB).

13. The device of claim **1**, wherein the first edge protection seal and the second edge protection seal are resistant to chemicals from the first and the second interlayers.

14. The device of claim **1**, wherein the first substrate and the second substrate are glass panels.

* * * * *