US009698613B2

(12) **United States Patent**
**Koshiishi et al.**

(10) **Patent No.: US 9,698,613 B2**
(45) **Date of Patent: Jul. 4, 2017**

(54) **CHARGING SYSTEM AND CHARGING STAND**

(71) Applicant: **NINTENDO CO., LTD.**, Kyoto (JP)

(72) Inventors: **Kazunori Koshiishi**, Kyoto (JP); **Yuko Zenri**, Kyoto (JP); **Hideto Matoba**, Kyoto (JP); **Shinji Hirose**, Kyoto (JP); **Akihiro Yoshikawa**, Kyoto (JP); **Kumpei Fujita**, Kyoto (JP)

(73) Assignee: **NINTENDO CO., LTD.**, Kyoto (JP)

( * ) Notice: Subject to any disclaimer, the term of this patent is extended or adjusted under 35 U.S.C. 154(b) by 66 days.

(21) Appl. No.: **14/641,758**

(22) Filed: **Mar. 9, 2015**

(65) **Prior Publication Data**

US 2015/0333549 A1 Nov. 19, 2015

(30) **Foreign Application Priority Data**

May 19, 2014 (JP) ..... 2014-103568

(51) **Int. Cl.**
***H02J 7/00*** (2006.01)

(52) **U.S. Cl.**
CPC ..... ***H02J 7/0044*** (2013.01); ***H02J 7/0047*** (2013.01)

(58) **Field of Classification Search**
CPC ..... H02J 7/0042; H02J 7/0044; H02J 7/0045
USPC ..... 320/115
See application file for complete search history.

(56) **References Cited**

U.S. PATENT DOCUMENTS

2002/0043960 A1* 4/2002 Janik ..... G06F 1/1632 320/128
2009/0284216 A1* 11/2009 Bessa ..... H02J 7/0044 320/101
2014/0232341 A1 8/2014 Ikegami
2014/0285150 A1* 9/2014 Toh ..... H04M 1/04 320/115

FOREIGN PATENT DOCUMENTS

JP 63-132637 8/1988
JP 2001-093585 4/2001
JP 2002-135985 A 5/2002
(Continued)

OTHER PUBLICATIONS

"Softbank 843SH Kantan Guide Book", Softbank Mobile Corp., 2nd edition, Oct. 2010, (3 pages) with English translation p. 208.
(Continued)

*Primary Examiner* — Arun Williams
(74) *Attorney, Agent, or Firm* — Nixon & Vanderhye P.C.

(57) **ABSTRACT**

A non-limiting example charging stand comprises a main body that includes an outer side member and the inner side member. The inner side member has an inserting portion for inserting a portable game apparatus. The inserting portion is set with a depth that hides a portion of a hinge but does not hide a cover constituting a part of a housing of the portable game apparatus when inserting the folded portable game apparatus in a vertical orientation. Accordingly, when viewing the portable game apparatus inserted in the charging stand from the front, it is possible to see a color, a pattern or an image of character that is applied to the cover. At this time, a color, a pattern or an image of character that is applied to an outer circumference surface (front) of the charging stand can be also seen.

**19 Claims, 6 Drawing Sheets**

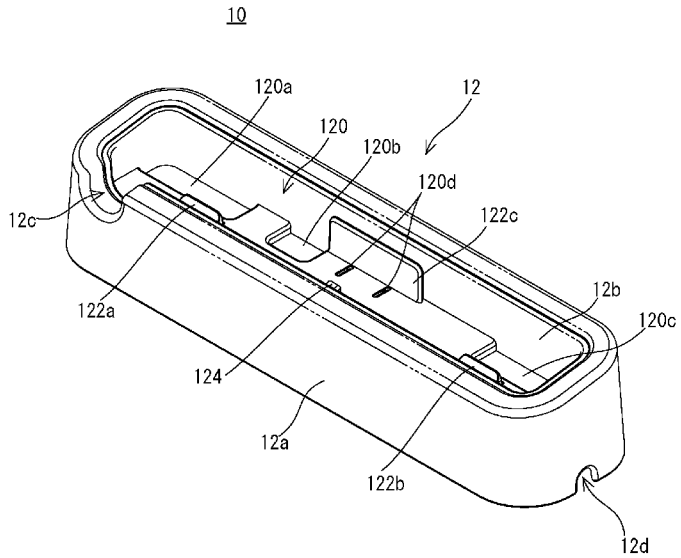

(56) **References Cited**

FOREIGN PATENT DOCUMENTS

| | | | |
|---|---|---|---|
| JP | 2003-150275 | | 5/2003 |
| JP | 2006-174620 | A | 6/2006 |
| JP | 2007-037324 | | 2/2007 |
| JP | 2007-060823 | | 3/2007 |
| JP | 2007-116317 | | 5/2007 |
| JP | 2008-283752 | | 11/2008 |
| JP | 2009-200799 | | 9/2009 |
| JP | 2010-109543 | | 5/2010 |
| JP | 2012-115030 | A | 6/2012 |
| JP | 2012-161176 | A | 8/2012 |
| JP | 2013-094036 | | 5/2013 |

OTHER PUBLICATIONS

Crystal Shield 3DLL, [online] Apr. 23, 2013, Gametech Co., Ltd, retrieved from internet on Aug. 5, 2016 URL:https://web.archive.org/web/20130423041150/http://www.gametech.co.jp/products/catalog/1548/1548_1.html (3 pages).

* cited by examiner

FIG. 1

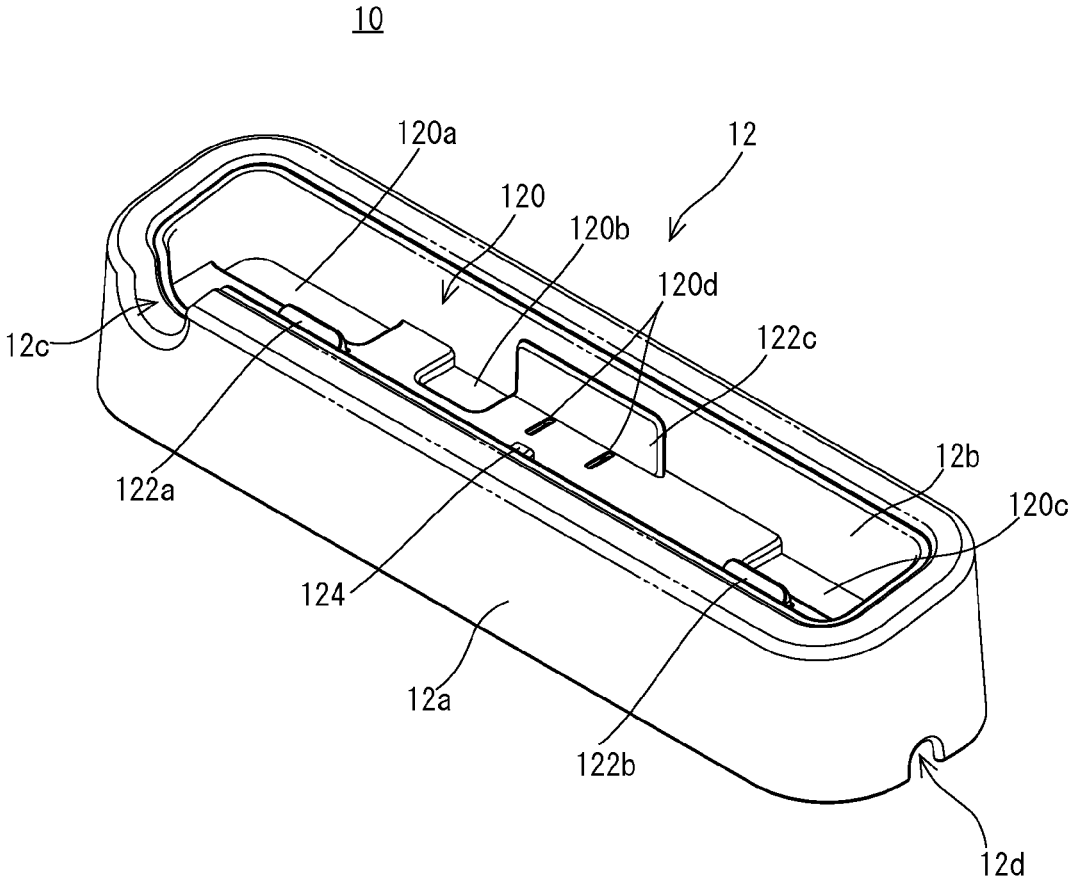
10
120a
12
120
120b
120d
12c
122c
12b
122a
120c
124
12a
122b
12d

FIG. 2(A) FRONT VIEW

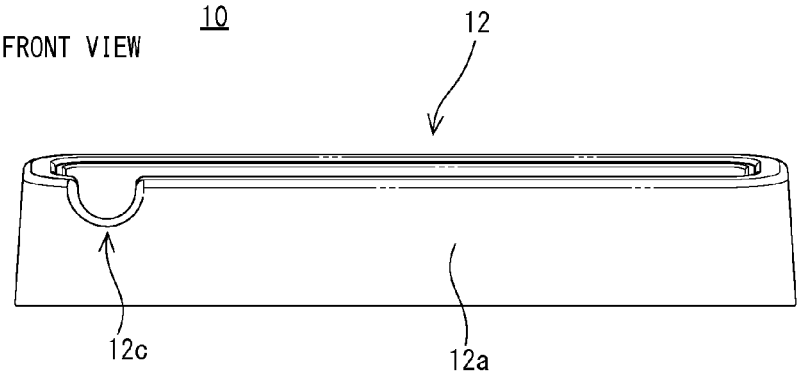


FIG. 2(B) REAR VIEW

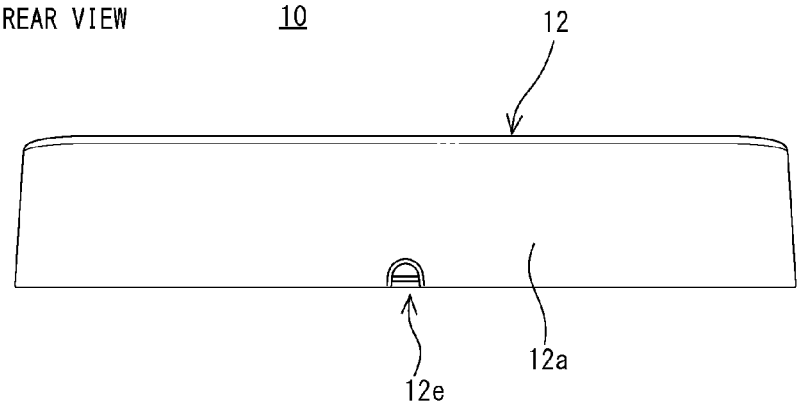


FIG. 2(C) LEFT SIDE VIEW

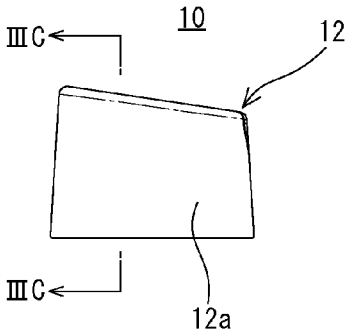


FIG. 2(D) RIGHT SIDE VIEW

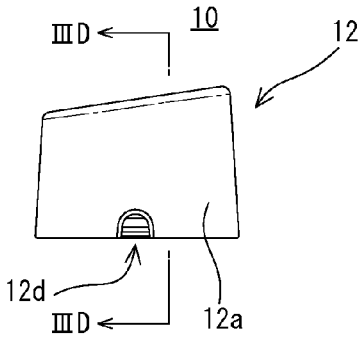

FIG. 3(A) TOP PLAN VIEW

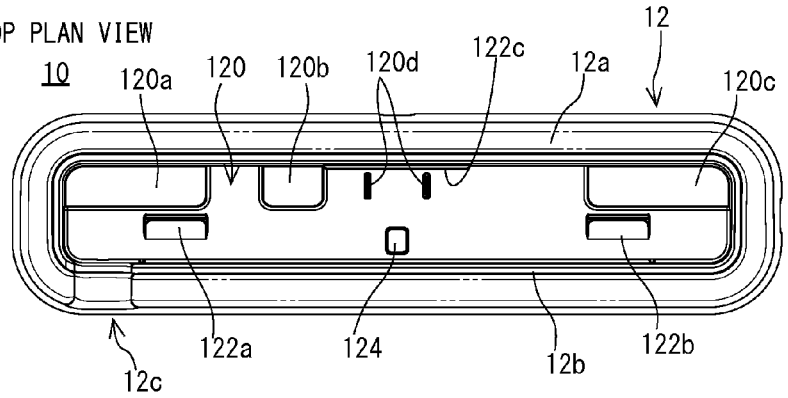


FIG. 3(B) BOTTOM PLAN VIEW

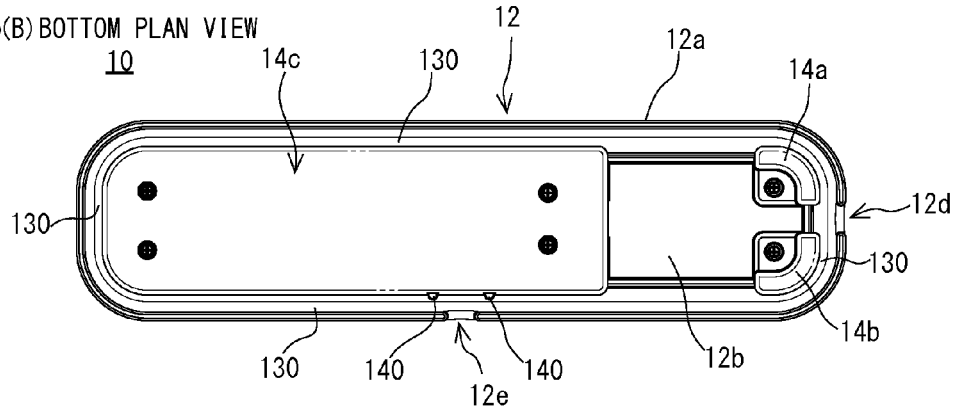


FIG. 3(C) CROSS-SECTIONAL VIEW AT IIIC-IIIC

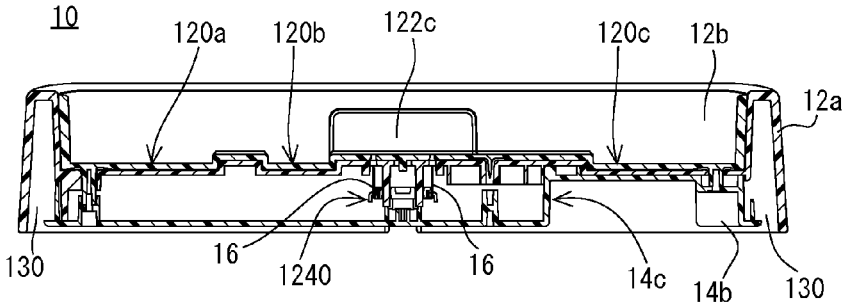


FIG. 3(D) CROSS-SECTIONAL VIEW AT IIID-IIID

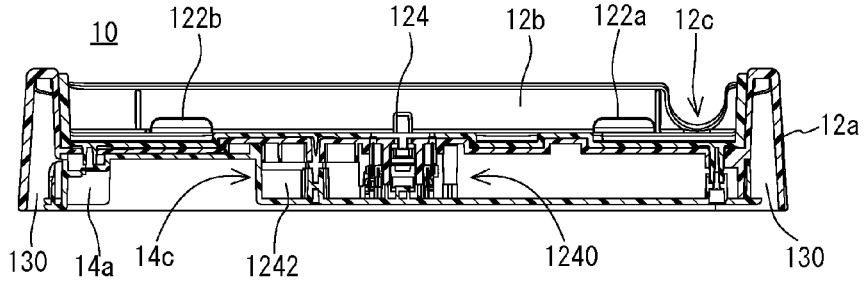

FIG. 4(A)

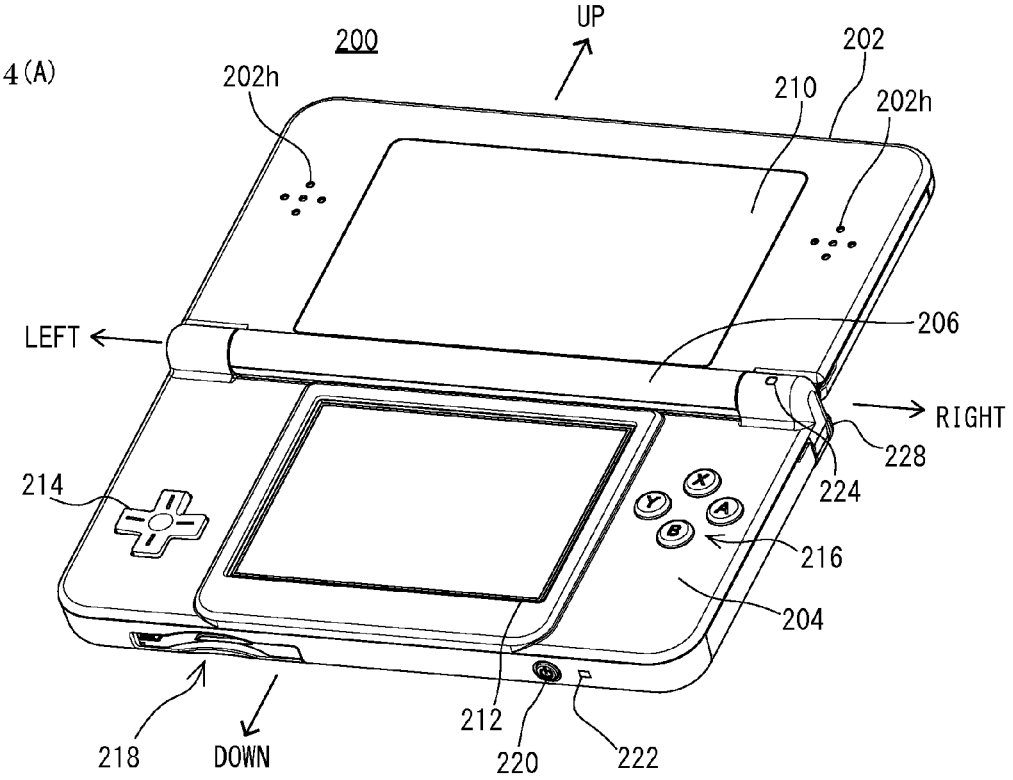
200
UP
202
202h
210
202h
LEFT
206
RIGHT
228
224
214
216
204
218
DOWN
212
220
222

FIG. 4(B)

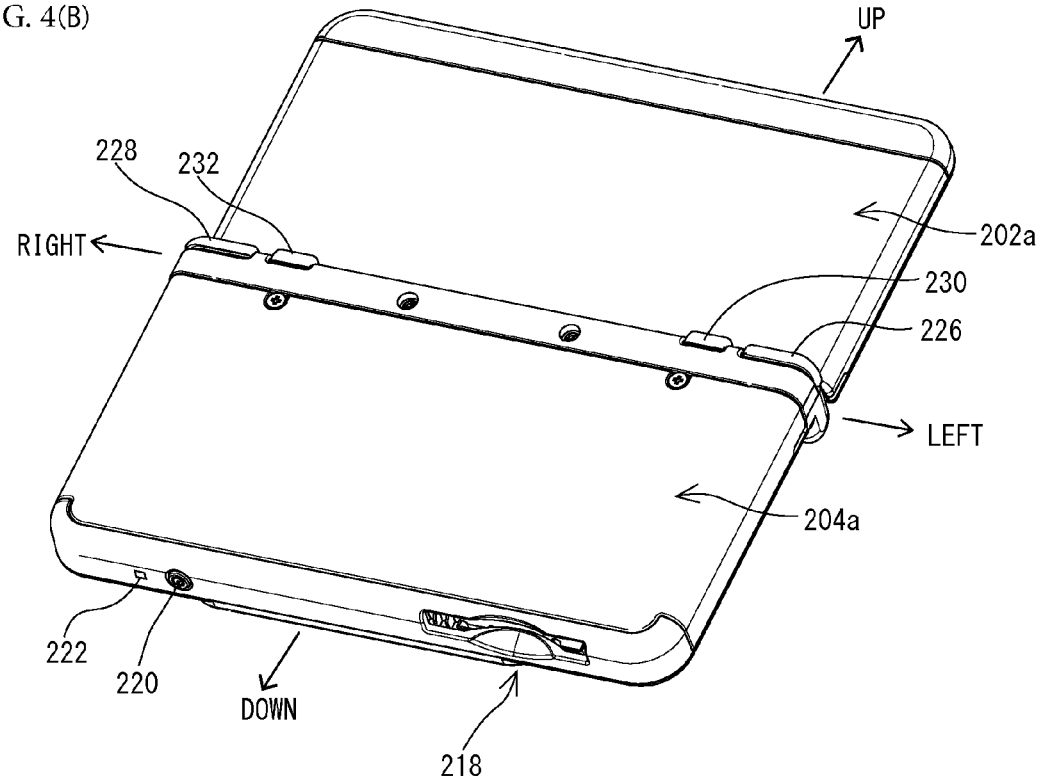
UP
228
232
RIGHT
202a
230
226
LEFT
204a
222
220
DOWN
218

FIG. 5(A)

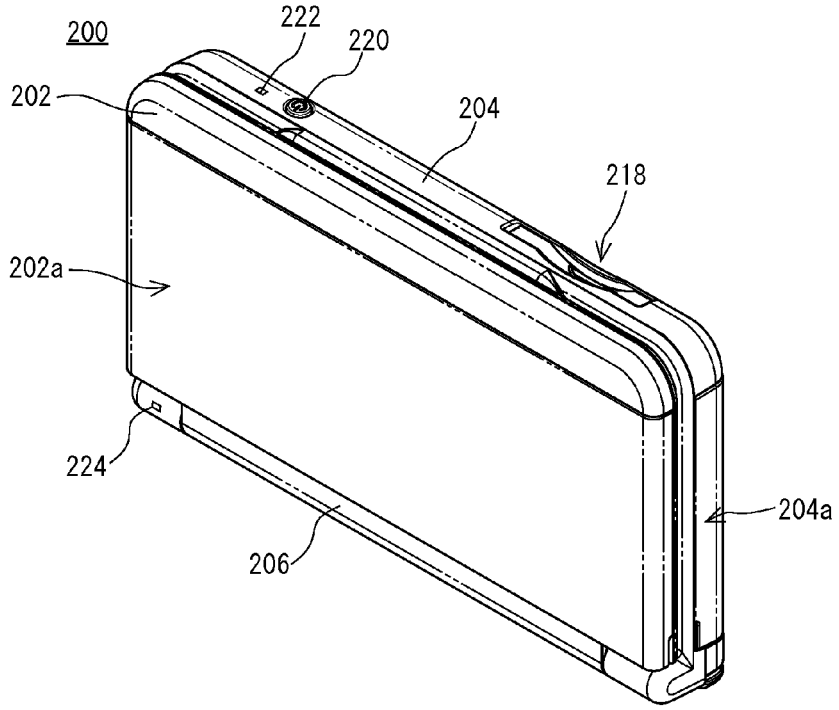
200
222
220
202
204
218
202a
224
204a
206

FIG. 5(B)

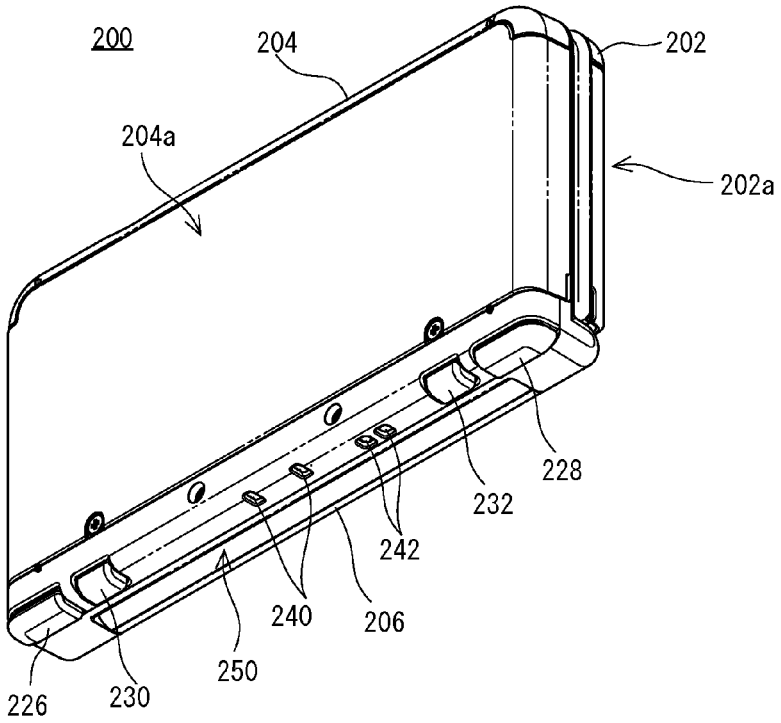
200
204
202
204a
202a
228
232
242
240
206
250
226
230

FIG. 6 (A)

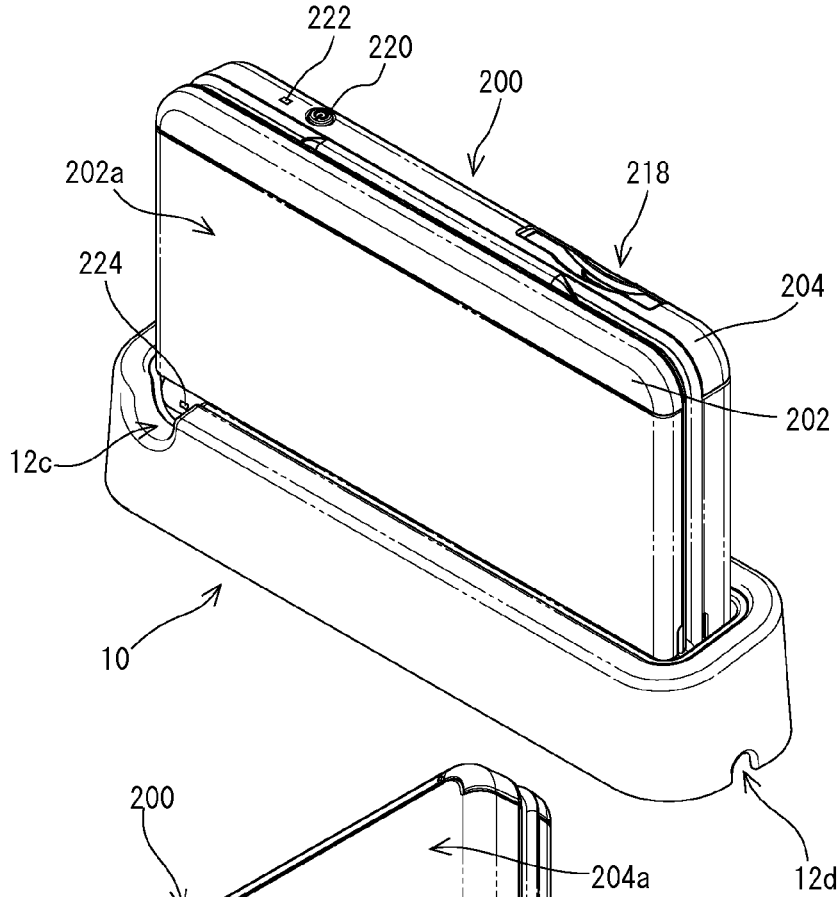
222
220
200
202a
218
224
204
202
12c
10
12d

FIG. 6(B)

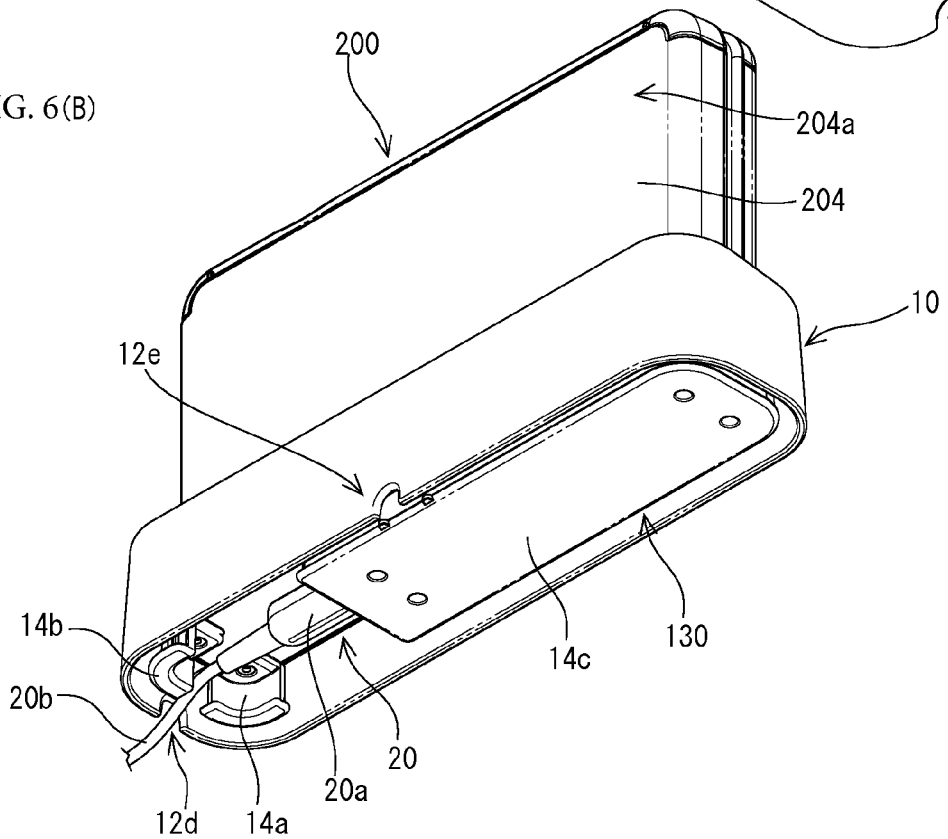
200
204a
204
10
12e
14b
20b
14c
130
20
20a
12d
14a

# CHARGING SYSTEM AND CHARGING STAND

## CROSS REFERENCE OF RELATED APPLICATION

The disclosure of the patent application No. 2014-103568 filed on May 19, 2014 is incorporated by reference.

## FIELD

This application describes a charging system and charging stand charging a battery of electronic device.

## SUMMARY

It is a primary object of an embodiment to provide a novel charging system and charging stand.

It is another object of the embodiment to provide a charging system and charging stand, capable of enjoying a design.

A first embodiment is a charging system comprising a foldable electronic device and a charging stand that receives and charges the electronic device, wherein the electronic device has a cover that is detachable and covers at least a part of the electronic device except a portion having a folding rotation axis. The charging stand has an inserting portion for inserting the portion having the holding rotation axis. A depth of the inserting portion is set such that when inserting the electronic device into the inserting portion, at least a part of a portion that is not covered with the cover is hidden by the charging stand, and a whole of a specific surface of the cover can be seen from a specific direction.

According to the first embodiment, since the depth of the inserting portion of the charging stand is set such that a whole of the specific surface of the cover can be seen, it is possible to enjoy a design of the cover even when inserting the electronic device into the charging stand.

A second embodiment is according to the first embodiment, wherein the charging stand hides most of the portion that is not covered with the cover when inserting the electronic device into the inserting portion.

According to the second embodiment, since the charging stand hides most of the portion that is not covered with the cover, most of a range that the electronic device can be seen is occupied by the specific surface of the cover when viewing the charging stand from the specific direction. Accordingly, it is possible to enjoy a design of the cover.

A third embodiment is according to the first embodiment, wherein the cover covers, at the specific surface thereof, the electronic device from one end to another end in a direction perpendicular or approximately perpendicular a direction that the electronic device is inserted into the inserting portion. Accordingly, when a user sees the charging stand from the specific direction, the specific surface can be seen in the front.

According to the third embodiment, when viewing the charging stand from the specific direction, it is possible to enjoy a design of the cover.

A fourth embodiment is according to the first embodiment, wherein the cover covers so as to surround the electronic device in a direction perpendicular or approximately perpendicular a direction that the electronic device is inserted into the inserting portion.

According to the fourth embodiment, even if the cover is seen from a direction other than the specific direction, it is possible to enjoy a design of the cover.



A fifth embodiment is according to first embodiment, wherein the depth of the inserting portion is set with a depth such that the charging stand does not hide the cover at a side of the specific direction when inserting the electronic device into the inserting portion.

According to the fifth embodiment, it is possible to see a whole of the cover when viewing from the specific direction.

A sixth embodiment is according to the fifth embodiment, wherein the electronic device is inserted into the inserting portion in a standing state and held in that state.

According to the sixth embodiment, since the electronic device is inserted in the charging stand in its standing state and held in that state, it is possible to enjoy a design of the cover if viewing the electronic device inserted into the charging stand from the front.

A seventh embodiment is according to the first embodiment, wherein the depth of the inserting portion is set such that a lower end of the cover is substantially identical to an upper end of the charging stand when viewing from the specific direction if inserting electronic device into the inserting portion. Therefore, the cover is not hidden by the charging stand when viewing from the specific direction.

According to the seventh embodiment, since the cover is not hidden by the charging stand when viewing from the specific direction, it is possible to enjoy a design of the cover.

An eighth embodiment is according to the first embodiment, wherein the cover and the charging stand are respectively formed with shapes, or applied with patterns or colors such that a unified design can be constituted as a whole when inserting the electronic device into the inserting portion.

According to the eighth embodiment, it is possible to enjoy a unified design as a whole with the cover and the charging stand.

A ninth embodiment is according to the first embodiment, wherein the charging stand further comprising a notch at a position corresponding to a light-emitting portion of the electronic device on a part of a side of the inserting portion when inserting the electronic device into the inserting portion.

According to the ninth embodiment, since the notch is provided at the position corresponding to the light-emitting portion of the electronic device on a part of the side of the inserting portion, it is possible to see the light-emitting portion during charge.

A tenth embodiment is according to the first embodiment, wherein the charging stand further comprising a first concavity capable of receiving at least a strap attaching portion at a position corresponding to the strap attaching portion that a strap is attached to the electronic device on a bottom of the inserting portion.

According to the tenth embodiment, since the strap attaching portion is received by the first concavity, it is possible to prevent the electronic device inserted into the inserting portion of the charging stand from shaking or inclining.

An eleventh embodiment is according to the first embodiment, wherein the charging stand further comprising a second concavity capable of receiving at least an operating portion of a push button at a position corresponding to a position of the push button provided on the electronic device on a bottom of the inserting portion.

According to the eleventh embodiment, since the operating portion of the push button is received by the second concavity, it is possible to prevent the electronic device inserted into the inserting portion of the charging stand from shaking or inclining.

A twelfth embodiment is according to the first embodiment, wherein the charging stand further comprising a convexity on a side of the inserting portion to be projected toward an inside of the inserting portion from the side so as to form a space between the electronic device and the side when inserting the electronic device into the inserting portion.

According to the twelfth embodiment, since the space is formed between the electronic device and the side of the inserting portion, it is possible to withdraw a strap out of the charging stand through the space even if attaching the strap to the electronic device.

A thirteenth embodiment is according to the first embodiment, wherein the charging stand further comprising a first projection on a bottom of the inserting portion to be projected from the bottom to above in a vertical direction to be inserted into a first gap between the portion having a folding rotation axis of the electronic device and a first housing of the electronic device when inserting the electronic device into the inserting portion.

According to the thirteenth embodiment, since the first projection is inserted into the first gap between the portion having the folding rotation axis of the electronic device and the first housing of the electronic device, the electronic device stably stands within the inserting portion.

A fourteenth embodiment is according to the first embodiment, wherein a depth of the inserting portion is gradually changed in a short direction. The depth of the inserting portion is made deeper as does to the rear from the front of the charging stand.

According to the fourteenth embodiment, it is compatible to show the cover and to make the electronic device stand stably.

A fifteenth embodiment is according to the first embodiment, wherein the charging stand further comprising an accommodation portion that accommodates a power cable at a side of an undersurface of the inserting portion.

According to the fifteenth embodiment, since the power cable can be accommodated, it is possible to adjust a length of the power cable.

A sixteenth embodiment is according to the fifteenth embodiment, wherein the charging stand further comprising an outer side member that covers an outer side of the inserting portion; a connecting portion that is provided in a side of the undersurface of the inserting portion and connects the power cable; and a second housing that accommodates at least a part of the connecting portion. The accommodation portion includes a second gap between an inner circumference surface of the outer side member and an outer circumference surface of the second housing.

According to the sixteenth embodiment, it is possible to accommodate the power cable in the second gap between the inner circumference surface of the outer member and the outer circumference surface of the second housing by winding the power cable on the outer circumference of the second housing, for example, at a side of the undersurface of the inserting portion.

A seventeenth embodiment is according to the sixteenth embodiment, wherein a connection plug of the power cable that is to be inserted into the connecting portion is arranged in a space formed at the side of the undersurface of the inserting portion. Furthermore, a communicating portion that passes the power cable is further provided on the outer side member.

According to the seventeenth embodiment, the connection plug is inserted into the connecting portion at the side of the undersurface of the inserting portion, and the power cable can be withdrawn from the communicating portion.

An eighteenth embodiment is according to the seventeenth embodiment, wherein the charging stand further comprising a second projection near a position corresponding to the position that the communicating portion is provided on an outer circumference surface of the second housing.

According to the eighteenth embodiment, since the power cable is sandwiched by the second projection between the second housing and the outer side member in a portion that the communicating portion is provided, it is possible to prevent the power cable from falling out from the second gap.

A nineteenth embodiment is a charging stand for charging an electronic device. The charging stand has an inserting portion that is inserted with the electronic device. Furthermore, in the charging stand, a notch is formed at a position corresponding to a light-emitting portion of the electronic device on a part of a side of the inserting portion. Furthermore, a concavity capable of receiving at least an operating portion of a push button is provided at a position corresponding to a position of the push button provided on the electronic device on a bottom of the inserting portion.

According to the nineteenth embodiment, it is possible not only to see the light-emitting portion of the electronic device through the notch but to make the electronic device stand stably. Accordingly, it is possible to perform the charge stably.

The above described objects and other objects, features, aspects and advantages of the embodiments will become more apparent from the following detailed description when taken in conjunction with the accompanying drawings.

## BRIEF DESCRIPTION OF THE DRAWINGS

FIG. **1** is a perspective view obliquely viewing down a non-limiting example charging stand.

FIGS. **2**(A)-(D) show a non-limiting example appearance of the charging stand shown in FIG. **1**, wherein FIG. **2**(A) is a front view, FIG. **2**(B) is a rear view, FIG. **2**(C) is a left side view and FIG. **2**(D) is a right side view.

FIGS. **3**(A)-(D) show a non-limiting example appearance and cross section of the charging stand shown in FIG. **1**, wherein FIG. **3**(A) is a top plan view, FIG. **3**(B) is a bottom plan view, FIG. **3**(C) is a cross-sectional view at a line IIIC-IIIC of FIG. **2**(C) and FIG. **3**(D) is a cross-sectional view at a line IIID-IIID of FIG. **2**(D).

FIGS. **4**(A)-(B) show a non-limiting example appearance structure in a state where a portable game apparatus that is to be charged on the charging stand shown in FIG. **1** is opened, wherein FIG. **4**(A) is a perspective view obliquely viewing down the front, and FIG. **4**(B) is a perspective view obliquely viewing down the rear.

FIGS. **5**(A)-(B) show a non-limiting example state where the portable game apparatus shown in FIG. **4** is folded, wherein FIG. **5**(A) is a perspective view obliquely viewing the rear of a first housing, and FIG. **5**(B) is a perspective view obliquely viewing the rear of a second housing.

FIGS. **6**(A)-(B) show a non-limiting example state where a folded portable game apparatus shown in FIG. **5** is inserted into the charging stand shown in FIG. **1**, wherein FIG. **6**(A) is a perspective view obliquely viewing down the charging stand and FIG. **6**(B) is a perspective view obliquely viewing up the charging stand.

## DETAILED DESCRIPTION OF NON-LIMITING EXAMPLE EMBODIMENTS

FIG. **1** is a perspective view obliquely viewing down a non-limiting example charging stand (cradle) **10**. FIG. **2**(A) is a front view viewing the charging stand **10** from the front, FIG. **2**(B) is a rear view viewing the charging stand **10** from the rear, FIG. **2**(C) is a left side view viewing the charging stand **10** from a left side and FIG. **2**(D) is a right side view viewing the charging stand **10** from a right side. FIG. **3**(A) is a top plan view viewing down the charging stand **10**, FIG. **3**(B) is a bottom plan view viewing up the charging stand **10**, FIG. **3**(C) is a cross-sectional view at a line IIIC-IIIC in FIG. **2**(C) and FIG. **3**(D) is a cross-sectional view at a line IIID-IIID in FIG. **2**(D).

With reference to FIG. **1** to FIG. **3**, the charging stand **10** includes a main body **12** that includes an outer side member **12***a* and an inner side member **12***b*. As well seen from FIG. **3**(A), the main body **12** (charging stand **10**) is formed in a track shape or a shape that corners of a rectangle are rounded when viewing from the top. The outer side member **12***a* defines a size and an external shape of the main body **12** (charging stand **10**). Accordingly, a size and an external shape of the outer side member **12***a* are the same as the size and the external shape of the main body **12** (charging stand **10**).

Furthermore, the inner side member **12***b* is provided inside the outer side member **12***a*, and as well seen from FIG. **3**(A), formed in a track shape or a shape that corners of a rectangle are rounded when viewing from the top. In addition, the outer side member **12***a* is provided so as to cover an outer surface of the inner side member **12***b*. This inner side member **12***b* has a concavity (inserting portion) **120** for inserting a portable game apparatus **200** (see FIG. **4** and FIG. **5**) describe later. Unevenness and holes are formed on the bottom of the inserting portion **120**. Specifically, as shown in FIG. **3**(A), FIG. **3**(C) and FIG. **3**(D), there are formed on the bottom of the inserting portion **120** with a concavity **120***a*, a concavity **120***b* and a concavity **120***c* each sinking down in the vertical direction of the charging stand **10**. Furthermore, two holes **120***d* are formed in the center of the bottom of the inserting portion **120** on a side of the rear of the inserting portion **120**. Furthermore, as seen also from FIG. **3**(A) and FIG. **3**(D), there are formed with a convexity (projection) **122***a* and a projection **122***b* each projecting upward in the vertical direction of the charging stand **10** from the center nearer the inner sides of right and left on the bottom of the inserting portion **120**. In addition, each of the projection **122***a* and the projection **122***b* is formed in a plate shape that is extended in a longitudinal direction of the charging stand **10** (inserting portion **120**). A convexity **122***c* that projects toward an inside of the inserting portion **120** is formed on the rear of the inserting portion **120**. Furthermore, a lever **124** that penetrates upward through the bottom of the inserting portion **120** from a lower part of the inserting portion **120** is provided on the inserting portion **120**.

As seen from FIG. **1**, FIG. **2**(A) and FIG. **3**(A), a notch **12***c* of a semi-circle shape is formed in upper left of the main body **12** (the outer side member **12***a* and the inner side member **12***b*) in the front of the charging stand **10**. Furthermore, as seen from FIG. **1**, FIG. **2** (D) and FIG. **3** (B), a notch (communicating portion) **12***d* of a semi-circle shape is formed in the center of a lower end portion of the outer side member **12***a* on the right side of the charging stand **10**. Furthermore, as seen from FIG. **2**(B) and FIG. **3**(B), a notch **12***e* (communicating portion) of a semi-circle shape is formed in the center of a lower end portion of the outer side member **12***a* on the rear of the charging stand **10**. Furthermore, as seen also from FIG. **2** (C) and FIG. **2**(D), in the charging stand **10** of this embodiment, a height of the main body **12** is made higher as goes to the rear from the front. That is, a depth of the inserting portion **120** is made deeper as goes to the rear from the front.

As shown in FIG. **3**(B) to FIG. **3**(D), a guide member **14***a*, a guide member **14***b* and a housing **14***c* are screwed to an undersurface of the inner side member **12***b*. Each of the guide member **14***a* and the guide member **14***b* is a fan shape in planar shape, and fixed to the undersurface of the inner side member **12***b* at a position that an arc portion thereof overlaps with a round corner portion of the outer side member **12***a* while separated from an inner surface of the outer side member **12***a* with a predetermined distance. It should be noted that the predetermined distance is a length capable of receiving a power cable **20***b* of an AC adaptor **20** (see FIG. **6**(B)) describe later. That is, the predetermined distance is set to approximately the same as a length of a diameter of a power cable **20***b*. Hereinafter, the same is true.

Furthermore, a planar shape of the housing **14***c* is approximately a rectangular shape and four corners thereof are made as round corners. As seen also from FIG. **3**(B), the housing **14***c* is fixed to the undersurface of the inner side member **12***b* with an outer circumference thereof but except a right side while separated from the inner circumference surface of the outer side member **12***a* with a predetermined distance. The housing **14***c* is shortened than the inner side member **12***b* in its length of the longitudinal direction. Therefore, a space is formed between the guide member **14***a* and the guide member **14***b*, and the housing **14***c*. This space is formed in order to insert a DC output plug **20***a* of the AC adaptor **20** (see FIG. **6** (B)).

By providing the guide member **14***a*, the guide member **14***b* and the housing **14***c*, an approximately track-shaped (a shape of an ellipse) accommodation portion **130** that has a width of predetermined distance between these and the outer side member **12***a* is formed. A length of the power cable **20***b* can be adjusted by winding the power cable **20***b* of the AC adaptor **20** around this accommodation portion **130**. That is, it is possible to freely adjust the length of the power cable **20***b* from an insertion plug that is inserted in an electric socket to the charging stand **10**. Furthermore, as described later, it is also possible to withdraw the power cable **20***b* from the notch **12***e*. Therefore, the degree of freedom of a place and a direction arranging the charging stand **10** is high.

Furthermore, two projections **140** are provided near a position that the notch **12***e* of the outer side member **12***a* is provided on an outer circumference surface of the housing **14***c* so as to sandwich the notch **12***e*. Therefore, a distance between the inner circumference surface of the outer side member **12***a* and the outer circumference surface of the housing **14***c* is made shorter than a predetermined distance at a position that the projections **140** are provided. By providing such the projections **140**, the power cable **20***b* is held by the projections **140** and the inner circumference surface of the outer side member **12***a*. Therefore, the power cable **20***b* is prevented from breaking away from the accommodation portion **130** when withdrawing the power cable **20***b* from the notch **12***e*. Accordingly, the charging stand **10** can be prevented from rising.

Although a detailed description is omitted because it is not the essential content for this case, as shown in FIG. **3** (B)-FIG. **3** (D), the housing **14***c* has an insertion port for inserting the DC output plug **20***a* of the above-described AC adaptor **20**, and covers a mechanism **1240** for moving a lever **124** up and down in the vertical direction and for moving the

charge terminals **16** up and down in the vertical direction in conjunction with the lever **124**. Furthermore, there is provided inside the housing **14***c* with a power source wire that connects the charge terminals **16** and a connection terminal **1242** that inserts the DC output plug **20***a*.

In addition, as described later, when inserting the portable game apparatus **200** into the inserting portion **120**, the lever **124** is pushed down in the vertical direction by a part of a hinge (portion having a folding rotation axis) **206** of the portable game apparatus **200**, and accordingly, the charge terminals **16** are lifted up in the vertical direction via a hole **120***d*.

As mentioned above, the charging stand **10** of this embodiment is used in order to charge a battery of the portable game apparatus **200** that is an example of the electronic device. FIG. **4** (A) is a perspective view obliquely viewing down a side of the front of a state where the portable game apparatus **200** is opened and FIG. **4** (B) is a perspective view obliquely viewing down a side of the rear of the state where the portable game apparatus **200** is opened.

In addition, when describing the portable game apparatus **200** and components thereof using directions, a description will be made using the directions of up, down, left and right shown in FIG. **4** (A). Therefore, in FIG. **4** (B), since the portable game apparatus **200** is turned upside down while the up and down direction is maintained, the left and right direction becomes reversed with respect to a case shown in FIG. **4** (A). Furthermore, in the portable game apparatus **200**, a surface that an upper LCD **210**, a lower LCD **212**, etc. describe later are provided will be called the front, and a surface (rear surface) opposite thereto will be called the rear. In addition, a width of the portable game apparatus **200** in a direction perpendicular to both of the up and down direction and the left and right direction of the portable game apparatus **200** may be called a thickness. This is also the same about an upper housing **202** and a lower housing **204**.

As shown in FIG. **4** (A), the portable game apparatus **200** includes the upper housing **202** and the lower housing **204**, and the upper housing **202** and the lower housing **204** are rotatably coupled to each other by a hinge **206** (portion having a folding rotation axis). Therefore, a main body of the portable game apparatus **200** is constituted by the upper housing **202**, the lower housing **204** and the hinge **206**.

As shown in FIG. **4** (A), the upper LCD **210** is provided at approximately the center on a side of the front of the upper housing **202**. The upper housing **202** is provided with holes **202***h* for each outputting a sound from a speaker provided inside the upper housing **202** in right and left of the upper LCD **210**.

As shown in FIG. **4** (A), the lower LCD **212** is provided in approximately the center of a side of the front of the lower housing **204**. A cross key **214** is provided in left of the lower LCD **212** on the lower housing **204**, and four push buttons (A button, B button, X button, Y button) **216** are provided in right of the lower LCD **212**.

Furthermore, as shown in FIG. **4** (A), a card slot **218**, a power button **220** and a power lamp **222** are provided on an undersurface of the lower housing **204**.

The card slot **218** is provided in order to insert a game card (not shown) that is storage medium storing in advance a game program, other application programs, etc.

The power lamp **222** is an LED lamp, for example, and turned on/off according to ON/OFF of the power supply, and indicates a residual quantity of the battery by a color and blinking of a light (light emitting) when turning on the power supply. If turning on the power supply, for example, when the residual quantity of the battery exceeds a first predetermined quantity (for example, half), the power lamp **222** emits a light with a blue color, and when less than the first predetermined quantity, emits with a red color. Then, when the residual quantity of the battery becomes very small, that is, when the residual quantity becomes less than a second predetermined quantity that is smaller than the first predetermined quantity, the power lamp **222** is blinked with a red color. Furthermore, at a time of charge, the power lamp **222** indicates whether be under charge by a color and blinking of a light (light emitting). For example, the power lamp **222** is turned off when terminating the charge after turned on with a red color during the charge. Thus, the power lamp **222** functions as an indicator for the power supply.

Then, as shown in FIG. **4** (A), a communication lamp **224** that functions as an indicator for indicating a communication situation is provided in an end portion in right of the hinge **206**. The communication lamp **224** is an LED lamp, for example, and emits a light with a green color during a communication with another game apparatus by a short-distance wireless communication or after the communication, and emits a light with a blue color during a communication with another game apparatus or computer on the Internet by connecting with a wireless LAN or after the communication.

Furthermore, as shown in FIG. **4** (B), a part of a side of the rear of the upper housing **202** is attached with a cover **202***a* that is attachable and detachable, and a part of a side of the rear of the lower housing **204** is attached with a cover **204***a* that is attachable and detachable. That is, the cover **202***a* and the cover **204***a* cover surfaces of a thickness direction of the portable game apparatus **200**. Although not shown, the cover **202***a* is mechanically attached to an attachment portion for the cover **202***a* of the upper housing **202**. However, the cover **202***a* may be adhered by a double-stick tape or the like, or may be screwed by providing screw holes. In this embodiment, as shown in FIG. **4** (B), the cover **204***a* is screwed to an attachment portion for the cover **204***a* of the lower housing **204**.

As shown in FIG. **4** (B), a push button (L button) **226** and a push button (R button) **228** are provided at left and right ends on an upper surface of the lower housing **204**. A further push button (ZL button) **230** is provided near the push button **226** on the upper surface of the lower housing **204**. Furthermore, a further push button (ZR button) **232** is provided near the push button **228** on the upper surface of the lower housing **204**.

In addition, the structure of the portable game apparatus **200** shown in FIG. **4**(A) and FIG. **4**(B) is an example, and should not be limited to this. A touch panel may be provided instead the lower LCD **212** or on the lower LCD **212**, for example.

For example, the cover **202***a* and the cover **204***a* may be applied with the same color or predetermined colors, or applied (drawn) with a predetermined pattern or a predetermined character (an animation character or a game character). However, the color or the pattern applied to the cover **202***a* and the cover **204***a* may be the same or may differ from each other. A single big picture may be represented on the cover **202***a* and the cover **204***a* by combining objects respectively drawn on them. In addition, different kinds of character may be drawn on the cover **202***a* and the cover **204***a*, or a single big character may be represented on the cover **202***a* and the cover **204***a* by combining objects respectively drawn on them.

Furthermore, in a usual portable game apparatus **200**, the main body, that is, the upper housing **202**, the lower housing **204** and the hinge **206** are applied with predetermined

colors. Therefore, it is possible to change a color or pattern of a part of the upper housing **202** and the lower housing **204**, or to apply a desired character to at least one of the upper housing **202** and the lower housing **204** by exchanging the cover **202***a* and the cover **204***a* for other kinds of cover(s), for example. That is, it is possible to perform the change of clothes in a part of the upper housing **202** and the lower housing **204**. However, the cover **202***a* and the cover **204***a* can be exchanged for the same kind of covers.

FIG. **5** (A) is a perspective view obliquely viewing one side of the rear of a state where the portable game apparatus **200** is closed and FIG. **5** (B) is a perspective view obliquely viewing another side of the rear of the state where the portable game apparatus **200** is closed.

When charging the portable game apparatus **200** using the charging stand **10**, as shown in FIG. **5** (A) and FIG. **5** (B), the portable game apparatus **200** is first folded. That is, the upper housing **202** and the lower housing **204** are rotated so as to make the upper part LCD **210** and the lower LCD **212** face each other. Here, as shown in FIG. **5** (A), when viewing the folded portable game apparatus **200** from a side of the rear of the upper housing **202**, a portion that is not covered with the cover **202***a* out of the upper housing **202** and a flat surface of the cover **202***a* can be seen. The hinge **206** that rotatably couples the upper housing **202** and the lower housing **204** can be seen.

As shown in FIG. **5** (B), when viewing the folded portable game apparatus **200** from a side of the rear of the lower housing **204**, it is possible to see the operating portions of the push buttons **226**-**232** that are provided on the upper surface of the lower housing **204** as mentioned above. Two power supply terminals **240** are provided in the center of the upper surface of the lower housing **204**. Furthermore, a hole **242** for attaching a strap (attaching hole) is provided between the push button **232** and the power supply terminals **240** on the upper surface of the lower housing **204**. In addition, since the upper housing **202** and the lower housing **204** are rotatably coupled to each other by the hinge **206**, a gap **250** is formed between an upper end portion of the lower housing **204** and the hinge **206**.

Next, the folded portable game apparatus **200** is laid on the charging stand **10**. That is, the folded portable game apparatus **200** is inserted into the inserting portion **120**. Since the power supply terminals **240** of the portable game apparatus **200** are provided on the upper surface of the lower housing **204** as mentioned above, the upper part of the lower housing **204** and the portion of the hinge **206** are inserted into the inserting portion **120** such that the power supply terminals **240** can be brought into contact with the charge terminals **16** of the charging stand **10**. At this time, the operating portions of the push button **228** and the push button **232** are received in the concavity **120***a*, and in a similar manner, the operating portions of the push button **226** and the push button **230** are received in the concavity **120***c*. If attaching a strap to the attaching hole **242** of the portable game apparatus **200**, an attaching portion (knot of the strap) is received in the concavity **120***b*. Furthermore, the projection **122***a* and the projection **122***b* are inserted into the gap **250**. That is, the portable game apparatus **200** is placed vertically.

Therefore, a flat portion of the upper surface of the lower housing **204** comes into contact with a flat portion without the unevenness (**120***a*-**120***c*, **124**) and the hole **120***d* of the bottom of the inserting portion **120**. At this time, the upper surface of the hinge **206** that becomes flush with the flat portion of the upper surface of the lower housing **204** also comes into contact with the flat portion of the bottom of the inserting portion **120**. Furthermore, since the depth of the inserting portion **120** is made deeper as goes to the rear, at a side of the lower housing **204** of the portable game apparatus **200**, an amount inserted into the inserting portion **120** becomes larger than that at a side of the upper housing **202** (hinge **106**) of the portable game apparatus **200**. Therefore, the portable game apparatus **200** stands relatively stably. Furthermore, in this embodiment, since the projection **122***a* and the projection **122***b* are inserted into the gap **250**, the portable game apparatus **200** is prevented from inclining in the direction of a short direction (the direction of the front and the rear) of the charging stand **10**. Therefore, the portable game apparatus **200** stands stably in comparison with a case where the projection **122***a* and the projection **122***b* are not provided, and is held in a vertical state.

As shown in FIG. **6** (A) and FIG. **6** (B), for example, the portable game apparatus **200** is inserted into the inserting portion **120** of the charging stand **10**. In addition, FIG. **6** (A) is a perspective view obliquely viewing down the charging stand **10** that the portable game apparatus **200** is inserted. FIG. **6** (B) is a perspective view obliquely viewing up the undersurface of the charging stand **10** that the portable game apparatus **200** is inserted. It is possible to call a charging system a configuration that the portable game apparatus **200** is thus inserted into the charging stand **10**.

As shown in FIG. **6** (A), the portable game apparatus **200** is arranged such that the flat surface of the cover **202***a* of the upper housing **202** can be seen in the front. As seen from FIG. **6** (A), in a side of the front of the charging stand **10**, only the hinge **206** is hidden by the inserting portion **120**, and this hinge **206** is not covered with the cover **202***a*. In other words, in a side of the front of the charging stand **10**, a position (height) of the upper end of the charging stand **10** (outer side member **12***a*) is identical (or substantially identical) to a position (height) of the lower end of the cover **202***a*. The depth of the inserting portion **12** is set so as to become like this. Therefore, about the upper housing **202** (cover **202***a*), at least an entire surface (flat surface) in a side of the front can be seen. Therefore, it is possible to see a color, a pattern or an image of character applied to the cover **202***a*. That is, it is possible to enjoy a design of the cover **202***a*.

In addition, as mentioned above, the depth of the inserting portion **12** becomes deeper as goes to the rear.

However, in addition to the upper housing **202** of the portable game apparatus **200**, but the lower housing **204** is also covered with the cover **204***a*, and the cover **202***a* and the cover **204***a* cover not only the rear of the housings (**202**, **204**) but a part of the side thereof. That is, the housings (**202**, **204**) are almost covered with the covers (**202***a*, **204***a*) in a state where the portable game apparatus **200** is folded. Therefore, even if viewing the charging stand **10** from a direction other than the front, it is possible to see a whole or a part of the color, the pattern or the image of character applied to the cover **202***a* or/and the cover **204***a*.

Furthermore, it is possible to enjoy a unified design by applying a feeling of unification of appearance or a feeling of unification of concept about a color, a pattern or an image of character on the outer circumference surface of the outer side member **12***a* of the charging stand **10** and a color, a pattern or an image of character of the cover **202***a*. For example, a feeling of unification of appearance corresponds to a fact that when viewing a whole of the cover **202***a* and the charging stand **10**, similar patterns or a single unitary character is applied to them. A feeling of unification of concept corresponds to a fact that when viewing a whole of

the cover **202***a* and the charging stand **10**, a picture that evokes a certain tale is applied (drawn) to them, etc.

Furthermore, in this embodiment, a feeling of unification may be applied to a shape of the charging stand **10** and a shape of the cover(s) **202***a* (and **204***a*). For example, jagged notches are formed on the upper surface (upper ends of the outer side member **12***a* and the inner side member **12***b*) of the charging stand **10**, and jagged notches having the same shape may be formed on at least the lower end(s) of the cover(s) **202***a* (and **204***a*) such that both notches correspond to each other. Otherwise, when viewing from the front, jagged notches that fit jagged notches provided on the upper surface of the charging stand **10** may be formed on the lower end portion of the cover **202***a*. These are examples and should not be limited. A shape of the charging stand **10** and a shape of the cover **204***a* are determined such that a unified design may be constituted as a whole.

In addition, a design having a feeling of unification as a whole may be constituted by combining a shape of the charging stand **10** or a color, pattern or the like applied to the charging stand **10** with a shape of the cover **204***a* or a color, pattern or the like applied to the cover **204***a*.

Furthermore, the communication lamp **224** provided on the hinge **206** is arranged at a position that the notch **12***c* is provided. Therefore, even if the portable game apparatus **200** is being charged, it is possible to see the lighting, putting out light, blinking and the color of lighting (luminescence) of the communication lamp **224**.

Furthermore, as shown in FIG. **6** (B), the DC output plug **20***a* of the AC adaptor **20** is connected to the internal connection terminal **1242** from the side of the housing **14**. In the example shown in FIG. **6** (B), the power cable **20***b* is withdrawn from the notch **12***d*, and the insertion plug that is provided at an end opposite to the DC output plug **20***a* is inserted into an electric socket. In addition, as mentioned above, by accommodating the power cable **20***b* in the accommodation portion **130**, it may be made to adjust a length thereof or to withdraw the power cable **20***b* from the notch **12***e*. For example, the power cable **20***b* is wound around the guide member **14***a*, the guide member **14***b* and the housing **14***c* to be accommodated in the accommodation portion **130**.

In addition, a DC voltage that is generated by stepping-down and rectifying the commercial power supply at a side of the insertion plug is supplied to the charging stand **10** via the power cable **20***b* and the DC output plug **20***a*.

Furthermore, as shown in FIG. **6** (A) and FIG. **6** (B), when attaching the portable game apparatus **200** to the charging stand **10**, since the above-mentioned convexity **122***c* is brought into contact with a part of the lower housing **204** of the portable game apparatus **200** (portion that is not covered with the cover **204***a*), a space is formed between the rear (flat surface of the cover **204***a*) of the lower housing **204** that is not brought into contact with the convexity **122***c* and the rear of the inserting portion **120**. Therefore, a strap is withdrawn to an outside of the charging stand **10** through this space. Accordingly, the portable game apparatus **200** that is put on the charging stand **10** does not shake or incline by having attached with the strap. That is, a contact state of the charge terminals **16** and the power supply terminals **240** is stabilized.

Furthermore, as seen also from FIG. **1** and FIG. **3** (C), the convexity **122***c* does not reach the upper surfaces (top surface) or upper ends of the outside member **12***a* and the inner side member **12***b*. That is, a width of the convexity **122***c* in a height direction of the charging stand **10** is smaller (shorter) than a depth of the inserting portion **120**, and the convexity **122***c* is formed to be adjacent to the bottom of the inserting portion **120**. Therefore, as mentioned above, when attaching the portable game apparatus **200** to the charging stand **10**, the convexity **122***c* comes into contact with a part of the lower housing **204** of the portable game apparatus **200**, but not with the cover **204***a* (not overlapped). Accordingly, even if the portable game apparatus **200** is attached with the cover **204***a* that is napped, for example, the cover **204***a* does not come into contact with the side of the inserting portion **12** or hardly comes into contact.

According to this embodiment, since a whole of the flat surface of the cover and the front of the charging stand can be seen when inserting the portable game apparatus that is attached with an attachable/detachable cover that constitutes a part of the housing, it is possible to enjoy the design of the cover and the unified design of the cover and the charging stand.

According to this embodiment, since the concavities receiving the operating portions of the push buttons and the attaching portion of the strap that are provided on the upper surface of the lower housing of the portable game apparatus are provided on the bottom of the inserting portion, it is possible to make the portable game apparatus stand stably.

Furthermore, according to this embodiment, since the projection to be inserted into the gap between the lower housing of the folded portable game apparatus and the hinge is provided on the bottom of the inserting portion, the portable game apparatus may not shake or incline, and accordingly, the contact state of the charge terminals **16** and the power supply terminals **240** becomes stable. That is, the charge can be performed stably.

Furthermore, according to this embodiment, since the accommodation portion that accommodates the power cable of the AC adaptor is provided while providing two or more communicating portions for withdrawing the power cable, it is possible to adjust the length of the power cable or to change a direction that the power cable is withdrawn corresponding to the place to put the charging stand. Therefore, it is possible to make appearance beautiful.

In addition, a shape, parts (components), etc. of the charging stand and the portable game apparatus shown in this embodiment are mere examples, and may be suitably changed corresponding to actual products, etc.

For example, the concavity **120***a* and the concavity **120***b* provided on the bottom of the inserting portion of the charging stand may be integrally formed. Furthermore, if there is no push button and attaching hole for strap on the upper surface of the lower housing of the portable game apparatus, the concavities that receive the operating portion of the push button and the attaching portion for strap can be omitted. Furthermore, if there is no attaching hole for strap on the upper surface of the lower housing, or if provided the attaching portion for strap is provided on a portion other than the upper surface, the convexity provided on the rear of the inserting portion can also be omitted.

A hole (or concavity) may be provided in a part of the bottom of the inserting portion. For example, holes may be formed in portions that the concavities **120***a*-**120***c* are formed.

Furthermore, since a notch should be provided at a position corresponding to the communication lamp, if providing the communication lamp at a left end when viewing the portable game apparatus from the front, the notch is formed in upper right when viewing the charging stand from the front. In addition, if not providing the communication

lamp or if not making the communication lamp light during the charge, it is not necessary to provide a notch for checking the communication lamp.

Furthermore, the number of the projections formed on the bottom of the inserting portion may be one, or three or more. If providing a single projection, for example, it is thinkable that the portable game apparatus stands stably when providing the projection near the center of the inserting portion rather than when providing at a position except near the center.

Although the guide member is provided on the bottom surface of the inner side member so as to form the accommodation portion by the inner circumference surface of the outer side member, the guide member and the outer circumference surface of the housing, the guide member may not be provided. In such a case, the power cable may be wound around the housing so as not to become an obstacle of connection of the DC output plug.

In this embodiment, although it is shown that the cover constitutes a part of the housing of the portable game apparatus, the cover may protect the housing of the portable game apparatus.

Furthermore, the portable game apparatus is shown as an example of the electronic device in this embodiment, but not limited to this. It is applicable also to a charging stand for an electronic dictionary or a mobile phone that a main body is foldable or a lid can be is opened or closed, and those charging system.

Although certain example systems, devices and apparatuses have been described herein, it is to be understood that the appended claims are not to be limited to the systems, devices and apparatuses disclosed, but on the contrary, are intended to cover various modifications and equivalent arrangements included within the spirit and scope of the appended claims.

What we claimed is:

**1**. A charging system comprising a foldable electronic device and a charging stand that receives and charges the electronic device, wherein

the electronic device has a cover that is detachable and covers at least a part of the electronic device other than a portion having a folding rotation axis,

the charging stand has an inserting portion for inserting the portion having the folding rotation axis, and

a depth of the inserting portion is set such that when inserting the electronic device into the inserting portion, a portion that is not covered with the cover is hidden by the charging stand, and all of a specific surface of the cover can be seen from a specific direction.

**2**. The charging system according to claim **1**, wherein the charging stand hides most of the electronic device that is not covered with the cover when inserting the electronic device into the inserting portion.

**3**. The charging system according to claim **1**, wherein the cover covers, at the specific surface, the electronic device from one end to another end in a direction perpendicular or approximately perpendicular a direction that the electronic device is inserted into the inserting portion.

**4**. A charging system according to claim **1**, wherein the cover covers so as to surround the electronic device in a direction perpendicular or approximately perpendicular a direction that the electronic device is inserted into the inserting portion.

**5**. A charging system according to claim **1**, wherein the depth of the inserting portion is set such that the charging stand does not hide the cover at a side of the specific direction when inserting the electronic device into the inserting portion.

**6**. A charging system according to claim **1**, wherein the electronic device is inserted into the inserting portion in a standing state and held in that state.

**7**. A charging system according to claim **1**, wherein the depth of the inserting portion is set such that a lower end of the cover is substantially level with an upper end of the charging stand when viewing from the specific direction when the electronic device is inserted into the inserting portion.

**8**. A charging system according to claim **1**, wherein the cover and the charging stand are respectively formed with shapes, or applied with patterns or colors such that a unified design can be viewed as a whole when the electronic device is inserted into the inserting portion.

**9**. A charging system according to claim **1**, the charging stand further comprising a notch at a position corresponding to a light-emitting portion of the electronic device on a side of the inserting portion when the electronic device is inserted into the inserting portion.

**10**. A charging system according to claim **1**, the charging stand further comprising a first concavity on a bottom of the inserting portion at a position corresponding to a strap attaching portion where a strap is attached to the electronic device, wherein the first concavity is configured to receive at least the strap attaching portion.

**11**. A charging system according to claim **1**, the charging stand further comprising a second concavity on a bottom of the inserting portion at a position corresponding to a position of a push button on the electronic device, wherein the second concavity is configured to receive at least an operating portion of the push button.

**12**. A charging system according to claim **1**, the charging stand further comprising a convexity that projects from a side of the inserting portion toward an inside of the inserting portion so as to form a space between the electronic device and the side when the electronic device is inserted into the inserting portion.

**13**. A charging system according to claim **1**, the charging stand further comprising a first projection on a bottom of the inserting portion that projects from the bottom in a vertical direction, the first projection being configured to be inserted into a first gap between a folding rotation axis of the electronic device and a first housing of the electronic device when the electronic device is inserted into the inserting portion.

**14**. A charging system according to claim **1**, wherein the depth of the inserting portion is gradually changed in a short direction.

**15**. A charging system according to claim **1**, the charging stand further comprising an accommodation portion configured to accommodate a power cable at an undersurface of the inserting portion.

**16**. A charging system according to claim **15**, the charging stand further comprising

an outer side member that covers an outer side of the inserting portion;

a connecting portion that at a side of the undersurface and connects the power cable; and

a second housing that accommodates at least a part of the connecting portion, wherein

the accommodation portion includes a second gap between an inner circumference surface of the outer side member and an outer circumference surface of the second housing.

**17**. A charging system according to claim **16**, wherein a connection plug of the power cable that is configured to be inserted into the connecting portion is in a space at the side of the undersurface, the charging system further comprising

a communicating portion that is on the outer side member and configured to pass the power cable.

**18**. A charging system according to claim **17**, the charging stand further comprising a second projection near a position corresponding to the position where the communicating portion is on an outer circumference surface of the second housing.

**19**. A charging stand for charging an electronic device, comprising:

an inserting portion that is configured to have the electronic device inserted therein;

a notch at a position corresponding to a light-emitting portion of the electronic device on a part of a side of the inserting portion; and

a concavity on a bottom of the inserting portion at a position corresponding to a position of a push button on the electronic device, wherein the concavity is configured to receive at least an operating portion of the push button when the electronic device is inserted in the inserting portion.

* * * * *