8519956

# THE UNITED STATES OF AMERICA

TO ALL TO WHOM THESE PRESENTS SHALL COME:

UNITED STATES DEPARTMENT OF COMMERCE
United States Patent and Trademark Office

August 26, 2024

THIS IS TO CERTIFY THAT ANNEXED HERETO IS A TRUE COPY FROM THE RECORDS OF THE UNITED STATES PATENT AND TRADEMARK OFFICE OF THOSE PAPERS OF THE BELOW IDENTIFIED PATENT APPLICATION THAT MET THE REQUIREMENTS TO BE GRANTED A FILING DATE UNDER 35 USC 111.

APPLICATION NUMBER: *16/596,361*
FILING DATE: *October 8, 2019*
PATENT NUMBER: *11,311,354*
ISSUE DATE: *April 26, 2022*

THE COUNTRY CODE AND NUMBER OF YOUR PRIORITY APPLICATION, TO BE USED FOR FILING ABROAD UNDER THE PARIS CONVENTION, IS US *16/596,361*

By Authority of the
Under Secretary of Commerce for Intellectual Property
and Director of the United States Patent and Trademark Office

Rodney Glover
Certifying Officer

PTO/AIA/15 (03-13)
Approved for use through 01/31/2014. OMB 0651-0032
U.S. Patent and Trademark Office; U.S. DEPARTMENT OF COMMERCE
Under the Paperwork Reduction Act of 1995 no persons are required to respond to a collection of information unless it displays a valid OMB control number

# UTILITY PATENT APPLICATION TRANSMITTAL

*(Only for new nonprovisional applications under 37 CFR 1.53(b))*

| | |
|---|---|
| *Attorney Docket No.* | SDC001 |
| *First Named Inventor* | Brandon Dale Kofford |
| *Title* | SCREW-ATTACHED PICK-UP DENTAL COPING SYSTEMS AND METHODS |
| *Express Mail Label No.* | |

## APPLICATION ELEMENTS

*See MPEP chapter 600 concerning utility patent application contents.*

*ADDRESS TO:* **Commissioner for Patents**
**P.O. Box 1450**
**Alexandria, VA 22313-1450**

1. ☐ **Fee Transmittal Form** (PTO/SB/17 or equivalent)
2. ☑ **Applicant asserts small entity status.** See 37 CFR 1.27
3. ☐ **Applicant certifies micro entity status.** See 37 CFR 1.29. Applicant must attach form PTO/SB/15A or B or equivalent.
4. ☑ **Specification** [*Total Pages* 43] Both the claims and abstract must start on a new page. *(See MPEP § 608.01(a) for information on the preferred arrangement)*
5. ☑ **Drawing(s)** (35 U.S.C. 113) [*Total Sheets* 26]
6. **Inventor's Oath or Declaration** [*Total Pages* 4] *(including substitute statements under 37 CFR 1.64 and assignments serving as an oath or declaration under 37 CFR 1.63(e))*
   a. ☑ Newly executed (original or copy)
   b. ☐ A copy from a prior application (37 CFR 1.63(d))
7. ☑ **Application Data Sheet** ** See note below.* See 37 CFR 1.76 (PTO/AIA/14 or equivalent)
8. **CD-ROM or CD-R** in duplicate, large table, or Computer Program (*Appendix*)
   ☐ Landscape Table on CD
9. **Nucleotide and/or Amino Acid Sequence Submission** (*if applicable, items a. – c. are required*)
   a. ☐ Computer Readable Form (CRF)
   b. ☐ Specification Sequence Listing on:
      i. ☐ CD-ROM or CD-R (2 copies); or
      ii. ☐ Paper
   c. ☐ Statements verifying identity of above copies

## ACCOMPANYING APPLICATION PAPERS

10. ☐ **Assignment Papers** (cover sheet & document(s))
    Name of Assignee _____
11. ☐ **37 CFR 3.73(c) Statement** (*when there is an assignee*) ☑ **Power of Attorney**
12. ☐ **English Translation Document** (*if applicable*)
13. ☐ **Information Disclosure Statement** (PTO/SB/08 or PTO-1449)
    ☐ Copies of citations attached
14. ☐ **Preliminary Amendment**
15. ☐ **Return Receipt Postcard** (*MPEP § 503*) (*Should be specifically itemized*)
16. ☐ **Certified Copy of Priority Document(s)** (*if foreign priority is claimed*)
17. ☐ **Nonpublication Request** Under 35 U.S.C. 122(b)(2)(B)(i). Applicant must attach form PTO/SB/35 or equivalent.
18. ☑ **Other:** sb0413c

***Note**: (1) Benefit claims under 37 CFR 1.78 and foreign priority claims under 1.55 **must** be included in an Application Data Sheet (ADS).
(2) For applications filed under 35 U.S.C. 111, the application must contain an ADS specifying the applicant if the applicant is an assignee, person to whom the inventor is under an obligation to assign, or person who otherwise shows sufficient proprietary interest in the matter. See 37 CFR 1.46(b).

## 19. CORRESPONDENCE ADDRESS

☑ The address associated with Customer Number: 112823 **OR** ☐ Correspondence address below

| | | | | | |
|---|---|---|---|---|---|
| Name | | | | | |
| Address | | | | | |
| City | | State | | Zip Code | |
| Country | | Telephone | | Email | |

| | | | |
|---|---|---|---|
| Signature | /Daniel John Whittle, #54,537/ | Date | 2019-10-08 |
| Name (Print/Type) | Daniel John Whittle | Registration No. (Attorney/Agent) | 54537 |

This collection of information is required by 37 CFR 1.53(b). The information is required to obtain or retain a benefit by the public which is to file (and by the USPTO to process) an application. Confidentiality is governed by 35 U.S.C. 122 and 37 CFR 1.11 and 1.14. This collection is estimated to take 12 minutes to complete, including gathering, preparing, and submitting the completed application form to the USPTO. Time will vary depending upon the individual case. Any comments on the amount of time you require to complete this form and/or suggestions for reducing this burden, should be sent to the Chief Information Officer, U.S. Patent and Trademark Office, U.S. Department of Commerce, P.O. Box 1450, Alexandria, VA 22313-1450. DO NOT SEND FEES OR COMPLETED FORMS TO THIS ADDRESS. **SEND TO: Commissioner for Patents, P.O. Box 1450, Alexandria, VA 22313-1450.**
*If you need assistance in completing the form, call 1-800-PTO-9199 and select option 2.*

# Privacy Act Statement

The **Privacy Act of 1974 (P.L. 93-579)** requires that you be given certain information in connection with your submission of the attached form related to a patent application or patent. Accordingly, pursuant to the requirements of the Act, please be advised that: (1) the general authority for the collection of this information is 35 U.S.C. 2(b)(2); (2) furnishing of the information solicited is voluntary; and (3) the principal purpose for which the information is used by the U.S. Patent and Trademark Office is to process and/or examine your submission related to a patent application or patent. If you do not furnish the requested information, the U.S. Patent and Trademark Office may not be able to process and/or examine your submission, which may result in termination of proceedings or abandonment of the application or expiration of the patent.

The information provided by you in this form will be subject to the following routine uses:

1. The information on this form will be treated confidentially to the extent allowed under the Freedom of Information Act (5 U.S.C. 552) and the Privacy Act (5 U.S.C 552a). Records from this system of records may be disclosed to the Department of Justice to determine whether disclosure of these records is required by the Freedom of Information Act.
2. A record from this system of records may be disclosed, as a routine use, in the course of presenting evidence to a court, magistrate, or administrative tribunal, including disclosures to opposing counsel in the course of settlement negotiations.
3. A record in this system of records may be disclosed, as a routine use, to a Member of Congress submitting a request involving an individual, to whom the record pertains, when the individual has requested assistance from the Member with respect to the subject matter of the record.
4. A record in this system of records may be disclosed, as a routine use, to a contractor of the Agency having need for the information in order to perform a contract. Recipients of information shall be required to comply with the requirements of the Privacy Act of 1974, as amended, pursuant to 5 U.S.C. 552a(m).
5. A record related to an International Application filed under the Patent Cooperation Treaty in this system of records may be disclosed, as a routine use, to the International Bureau of the World Intellectual Property Organization, pursuant to the Patent Cooperation Treaty.
6. A record in this system of records may be disclosed, as a routine use, to another federal agency for purposes of National Security review (35 U.S.C. 181) and for review pursuant to the Atomic Energy Act (42 U.S.C. 218(c)).
7. A record from this system of records may be disclosed, as a routine use, to the Administrator, General Services, or his/her designee, during an inspection of records conducted by GSA as part of that agency's responsibility to recommend improvements in records management practices and programs, under authority of 44 U.S.C. 2904 and 2906. Such disclosure shall be made in accordance with the GSA regulations governing inspection of records for this purpose, and any other relevant (*i.e.*, GSA or Commerce) directive. Such disclosure shall not be used to make determinations about individuals.
8. A record from this system of records may be disclosed, as a routine use, to the public after either publication of the application pursuant to 35 U.S.C. 122(b) or issuance of a patent pursuant to 35 U.S.C. 151. Further, a record may be disclosed, subject to the limitations of 37 CFR 1.14, as a routine use, to the public if the record was filed in an application which became abandoned or in which the proceedings were terminated and which application is referenced by either a published application, an application open to public inspection or an issued patent.
9. A record from this system of records may be disclosed, as a routine use, to a Federal, State, or local law enforcement agency, if the USPTO becomes aware of a violation or potential violation of law or regulation.



Straumann USA Exhibit 1012

PTO/AIA/01 (06-12)
Approved for use through 01/31/2014. OMB 0651-0032
U.S. Patent and Trademark Office; U.S. DEPARTMENT OF COMMERCE
Under the Paperwork Reduction Act of 1995, no persons are required to respond to a collection of information unless it displays a valid OMB control number.

# DECLARATION (37 CFR 1.63) FOR UTILITY OR DESIGN APPLICATION USING AN APPLICATION DATA SHEET (37 CFR 1.76)

| **Title of Invention** | SCREW-ATTACHED PICK-UP DENTAL COPING SYSTEMS AND METHODS |
|---|---|

As the below named inventor, I hereby declare that:

This declaration is directed to:

- [x] The attached application, or
- [ ] United States application or PCT international application number _____ filed on _____.

The above-identified application was made or authorized to be made by me.

I believe that I am the original inventor or an original joint inventor of a claimed invention in the application.

I hereby acknowledge that any willful false statement made in this declaration is punishable under 18 U.S.C. 1001 by fine or imprisonment of not more than five (5) years, or both.

## WARNING:

Petitioner/applicant is cautioned to avoid submitting personal information in documents filed in a patent application that may contribute to identity theft. Personal information such as social security numbers, bank account numbers, or credit card numbers (other than a check or credit card authorization form PTO-2038 submitted for payment purposes) is never required by the USPTO to support a petition or an application. If this type of personal information is included in documents submitted to the USPTO, petitioners/applicants should consider redacting such personal information from the documents before submitting them to the USPTO. Petitioner/applicant is advised that the record of a patent application is available to the public after publication of the application (unless a non-publication request in compliance with 37 CFR 1.213(a) is made in the application) or issuance of a patent. Furthermore, the record from an abandoned application may also be available to the public if the application is referenced in a published application or an issued patent (see 37 CFR 1.14). Checks and credit card authorization forms PTO-2038 submitted for payment purposes are not retained in the application file and therefore are not publicly available.

LEGAL NAME OF INVENTOR

Inventor: Charles Albert Rudisill Date (Optional) :_____

Signature: Charles A Rudisill

Note: An application data sheet (PTO/SB/14 or equivalent), including naming the entire inventive entity, must accompany this form or must have been previously filed. Use an additional PTO/AIA/01 form for each additional inventor.

This collection of information is required by 35 U.S.C. 115 and 37 CFR 1.63. The information is required to obtain or retain a benefit by the public which is to file (and by the USPTO to process) an application. Confidentiality is governed by 35 U.S.C. 122 and 37 CFR 1.11 and 1.14. This collection is estimated to take 1 minute to complete, including gathering, preparing, and submitting the completed application form to the USPTO. Time will vary depending upon the individual case. Any comments on the amount of time you require to complete this form and/or suggestions for reducing this burden, should be sent to the Chief Information Officer, U.S. Patent and Trademark Office, U.S. Department of Commerce, P.O. Box 1450, Alexandria, VA 22313-1450. DO NOT SEND FEES OR COMPLETED FORMS TO THIS ADDRESS. **SEND TO: Commissioner for Patents, P.O. Box 1450, Alexandria, VA 22313-1450.**

*If you need assistance in completing the form, call 1-800-PTO-9199 and select option 2.*

# Privacy Act Statement

The **Privacy Act of 1974 (P.L. 93-579)** requires that you be given certain information in connection with your submission of the attached form related to a patent application or patent. Accordingly, pursuant to the requirements of the Act, please be advised that: (1) the general authority for the collection of this information is 35 U.S.C. 2(b)(2); (2) furnishing of the information solicited is voluntary; and (3) the principal purpose for which the information is used by the U.S. Patent and Trademark Office is to process and/or examine your submission related to a patent application or patent. If you do not furnish the requested information, the U.S. Patent and Trademark Office may not be able to process and/or examine your submission, which may result in termination of proceedings or abandonment of the application or expiration of the patent.

The information provided by you in this form will be subject to the following routine uses:

1. The information on this form will be treated confidentially to the extent allowed under the Freedom of Information Act (5 U.S.C. 552) and the Privacy Act (5 U.S.C 552a). Records from this system of records may be disclosed to the Department of Justice to determine whether disclosure of these records is required by the Freedom of Information Act.
2. A record from this system of records may be disclosed, as a routine use, in the course of presenting evidence to a court, magistrate, or administrative tribunal, including disclosures to opposing counsel in the course of settlement negotiations.
3. A record in this system of records may be disclosed, as a routine use, to a Member of Congress submitting a request involving an individual, to whom the record pertains, when the individual has requested assistance from the Member with respect to the subject matter of the record.
4. A record in this system of records may be disclosed, as a routine use, to a contractor of the Agency having need for the information in order to perform a contract. Recipients of information shall be required to comply with the requirements of the Privacy Act of 1974, as amended, pursuant to 5 U.S.C. 552a(m).
5. A record related to an International Application filed under the Patent Cooperation Treaty in this system of records may be disclosed, as a routine use, to the International Bureau of the World Intellectual Property Organization, pursuant to the Patent Cooperation Treaty.
6. A record in this system of records may be disclosed, as a routine use, to another federal agency for purposes of National Security review (35 U.S.C. 181) and for review pursuant to the Atomic Energy Act (42 U.S.C. 218(c)).
7. A record from this system of records may be disclosed, as a routine use, to the Administrator, General Services, or his/her designee, during an inspection of records conducted by GSA as part of that agency's responsibility to recommend improvements in records management practices and programs, under authority of 44 U.S.C. 2904 and 2906. Such disclosure shall be made in accordance with the GSA regulations governing inspection of records for this purpose, and any other relevant ( *i.e.*, GSA or Commerce) directive. Such disclosure shall not be used to make determinations about individuals.
8. A record from this system of records may be disclosed, as a routine use, to the public after either publication of the application pursuant to 35 U.S.C. 122(b) or issuance of a patent pursuant to 35 U.S.C. 151. Further, a record may be disclosed, subject to the limitations of 37 CFR 1.14, as a routine use, to the public if the record was filed in an application which became abandoned or in which the proceedings were terminated and which application is referenced by either a published application, an application open to public inspection or an issued patent.
9. A record from this system of records may be disclosed, as a routine use, to a Federal, State, or local law enforcement agency, if the USPTO becomes aware of a violation or potential violation of law or regulation.



Straumann USA Exhibit 1012

PTO/AIA/82A (07-13)
Approved for use through 11/30/2014. OMB 0651-0051
U.S. Patent and Trademark Office; U.S. DEPARTMENT OF COMMERCE
Under the Paperwork Reduction Act of 1995, no persons are required to respond to a collection of information unless it displays a valid OMB control number.

# TRANSMITTAL FOR POWER OF ATTORNEY TO ONE OR MORE REGISTERED PRACTITIONERS

NOTE: This form is to be submitted with the Power of Attorney by Applicant form (PTO/AIA/82B) to identify the application to which the Power of Attorney is directed, in accordance with 37 CFR 1.5, unless the application number and filing date are identified in the Power of Attorney by Applicant form. If neither form PTO/AIA/82A nor form PTO/AIA82B identifies the application to which the Power of Attorney is directed, the Power of Attorney will not be recognized in the application.

| | |
|---|---|
| Application Number | |
| Filing Date | 2019-10-08 |
| First Named Inventor | Brandon D Kofford |
| Title | SCREW-ATTACHED PICK-UP DENTAL COPING SYSTEMS AND METHODS |
| Art Unit | |
| Examiner Name | |
| Attorney Docket Number | SDC001 |

**SIGNATURE of Applicant or Patent Practitioner**

| | | | |
|---|---|---|---|
| Signature | /Daniel John Whittle, #54,537/ | Date (Optional) | |
| Name | Daniel John Whittle | Registration Number | 54,537 |
| Title (if Applicant is a juristic entity) | | | |
| Applicant Name (if Applicant is a juristic entity) | | | |

**NOTE:** This form must be signed in accordance with 37 CFR 1.33. See 37 CFR 1.4(d) for signature requirements and certifications. If more than one applicant, use multiple forms.

☑ *Total of 2 forms are submitted.

This collection of information is required by 37 CFR 1.131, 1.32, and 1.33. The information is required to obtain or retain a benefit by the public which is to file (and by the USPTO to process) an application. Confidentiality is governed by 35 U.S.C. 122 and 37 CFR 1.11 and 1.14. This collection is estimated to take 3 minutes to complete, including gathering, preparing, and submitting the completed application form to the USPTO. Time will vary depending upon the individual case. Any comments on the amount of time you require to complete this form and/or suggestions for reducing this burden, should be sent to the Chief Information Officer, U.S. Patent and Trademark Office, U.S. Department of Commerce, P.O. Box 1450, Alexandria, VA 22313-1450. DO NOT SEND FEES OR COMPLETED FORMS TO THIS ADDRESS. **SEND TO: Commissioner for Patents, P.O. Box 1450, Alexandria, VA 22313-1450.**

*If you need assistance in completing the form, call 1-800-PTO-9199 and select option 2.*

PTO/AIA/82B (07-13)
Approved for use through 11/30/2014. OMB 0651-0051
U.S. Patent and Trademark Office; U.S. DEPARTMENT OF COMMERCE
Under the Paperwork Reduction Act of 1995, no persons are required to respond to a collection of information unless it displays a valid OMB control number

# POWER OF ATTORNEY BY APPLICANT

I hereby revoke all previous powers of attorney given in the application identified in either the attached transmittal letter or the boxes below.

| Application Number | Filing Date |
|---|---|
| | |

(Note: The boxes above may be left blank if information is provided on form PTO/AIA/82A.)

☑ I hereby appoint the Patent Practitioner(s) associated with the following Customer Number as my/our attorney(s) or agent(s), and to transact all business in the United States Patent and Trademark Office connected therewith for the application referenced in the attached transmittal letter (form PTO/AIA/82A) or identified above: 000112823

**OR**

☐ I hereby appoint Practitioner(s) named in the attached list (form PTO/AIA/82C) as my/our attorney(s) or agent(s), and to transact all business in the United States Patent and Trademark Office connected therewith for the patent application referenced in the attached transmittal letter (form PTO/AIA/82A) or identified above. (Note: Complete form PTO/AIA/82C.)

**Please recognize or change the correspondence address for the application identified in the attached transmittal letter or the boxes above to:**

☐ The address associated with the above-mentioned Customer Number

**OR**

☑ The address associated with Customer Number: 000112823

**OR**

| | | | | | |
|---|---|---|---|---|---|
| Firm or Individual Name | | | | | |
| Address | | | | | |
| City | | State | | Zip | |
| Country | | | | | |
| Telephone | | Email | | | |

I am the Applicant (if the Applicant is a juristic entity, list the Applicant name in the box):

☑ Inventor or Joint Inventor (title not required below)

☐ Legal Representative of a Deceased or Legally Incapacitated Inventor (title not required below)

☐ Assignee or Person to Whom the Inventor is Under an Obligation to Assign (provide signer's title if applicant is a juristic entity)

☐ Person Who Otherwise Shows Sufficient Proprietary Interest (e.g., a petition under 37 CFR 1.46(b)(2) was granted in the application or is concurrently being filed with this document) (provide signer's title if applicant is a juristic entity)

**SIGNATURE of Applicant for Patent**

The undersigned (whose title is supplied below) is authorized to act on behalf of the applicant (e.g., where the applicant is a juristic entity).

| | | | |
|---|---|---|---|
| Signature | Charles A Rudisill | Date (Optional) | |
| Name | Charles Albert Rudisill | | |
| Title | | | |

**NOTE:** Signature - This form must be signed by the applicant in accordance with 37 CFR 1.33. See 37 CFR 1.4 for signature requirements and certifications. If more than one applicant, use multiple forms.

☑ Total of 2 forms are submitted.

This collection of information is required by 37 CFR 1.131, 1.32, and 1.33. The information is required to obtain or retain a benefit by the public which is to file (and by the USPTO to process) an application. Confidentiality is governed by 35 U.S.C. 122 and 37 CFR 1.11 and 1.14. This collection is estimated to take 3 minutes to complete, including gathering, preparing, and submitting the completed application form to the USPTO. Time will vary depending upon the individual case. Any comments on the amount of time you require to complete this form and/or suggestions for reducing this burden, should be sent to the Chief Information Officer, U.S. Patent and Trademark Office, U.S. Department of Commerce, P.O. Box 1450, Alexandria, VA 22313-1450. DO NOT SEND FEES OR COMPLETED FORMS TO THIS ADDRESS. **SEND TO: Commissioner for Patents, P.O. Box 1450, Alexandria, VA 22313-1450.**

*If you need assistance in completing the form, call 1-800-PTO-9199 and select option 2.*

PTO/AIA/82C (07-13)
Approved for use through 11/30/2014. OMB 0651-0051
U.S. Patent and Trademark Office; U.S. DEPARTMENT OF COMMERCE
Under the Paperwork Reduction Act of 1995, no persons are required to respond to a collection of information unless it displays a valid OMB control number

# POWER OF ATTORNEY BY APPLICANT

No more than ten (10) patent practitioners total may be appointed as set forth below by name and registration number. This page need not be submitted if appointing the Patent Practitioner(s) associated with a Customer Number (see form PTO/AIA/82B):

| Name | Registration Number |
|---|---|
| | |
| | |
| | |
| | |
| | |
| | |
| | |
| | |
| | |
| | |

# Privacy Act Statement

The **Privacy Act of 1974 (P.L. 93-579)** requires that you be given certain information in connection with your submission of the attached form related to a patent application or patent. Accordingly, pursuant to the requirements of the Act, please be advised that: (1) the general authority for the collection of this information is 35 U.S.C. 2(b)(2); (2) furnishing of the information solicited is voluntary; and (3) the principal purpose for which the information is used by the U.S. Patent and Trademark Office is to process and/or examine your submission related to a patent application or patent. If you do not furnish the requested information, the U.S. Patent and Trademark Office may not be able to process and/or examine your submission, which may result in termination of proceedings or abandonment of the application or expiration of the patent.

The information provided by you in this form will be subject to the following routine uses:

1. The information on this form will be treated confidentially to the extent allowed under the Freedom of Information Act (5 U.S.C. 552) and the Privacy Act (5 U.S.C. 552a). Records from this system of records may be disclosed to the Department of Justice to determine whether the Freedom of Information Act requires disclosure of these records.
2. A record from this system of records may be disclosed, as a routine use, in the course of presenting evidence to a court, magistrate, or administrative tribunal, including disclosures to opposing counsel in the course of settlement negotiations.
3. A record in this system of records may be disclosed, as a routine use, to a Member of Congress submitting a request involving an individual, to whom the record pertains, when the individual has requested assistance from the Member with respect to the subject matter of the record.
4. A record in this system of records may be disclosed, as a routine use, to a contractor of the Agency having need for the information in order to perform a contract. Recipients of information shall be required to comply with the requirements of the Privacy Act of 1974, as amended, pursuant to 5 U.S.C. 552a(m).
5. A record related to an International Application filed under the Patent Cooperation Treaty in this system of records may be disclosed, as a routine use, to the International Bureau of the World Intellectual Property Organization, pursuant to the Patent Cooperation Treaty.
6. A record in this system of records may be disclosed, as a routine use, to another federal agency for purposes of National Security review (35 U.S.C. 181) and for review pursuant to the Atomic Energy Act (42 U.S.C. 218(c)).
7. A record from this system of records may be disclosed, as a routine use, to the Administrator, General Services, or his/her designee, during an inspection of records conducted by GSA as part of that agency's responsibility to recommend improvements in records management practices and programs, under authority of 44 U.S.C. 2904 and 2906. Such disclosure shall be made in accordance with the GSA regulations governing inspection of records for this purpose, and any other relevant (i.e., GSA or Commerce) directive. Such disclosure shall not be used to make determinations about individuals.
8. A record from this system of records may be disclosed, as a routine use, to the public after either publication of the application pursuant to 35 U.S.C. 122(b) or issuance of a patent pursuant to 35 U.S.C. 151. Further, a record may be disclosed, subject to the limitations of 37 CFR 1.14, as a routine use, to the public if the record was filed in an application which became abandoned or in which the proceedings were terminated and which application is referenced by either a published application, an application open to public inspections or an issued patent.
9. A record from this system of records may be disclosed, as a routine use, to a Federal, State, or local law enforcement agency, if the USPTO becomes aware of a violation or potential violation of law or regulation.



Straumann USA Exhibit 1012

Doc Code: PA..
Document Description: Power of Attorney

PTO/AIA/82B (07-13)
Approved for use through 11/30/2014. OMB 0651-0051
U.S. Patent and Trademark Office; U.S. DEPARTMENT OF COMMERCE
Under the Paperwork Reduction Act of 1995, no persons are required to respond to a collection of information unless it displays a valid OMB control number

# POWER OF ATTORNEY BY APPLICANT

I hereby revoke all previous powers of attorney given in the application identified in either the attached transmittal letter or the boxes below.

| Application Number | Filing Date |
|---|---|
| | |

(Note: The boxes above may be left blank if information is provided on form PTO/AIA/82A.)

☑ I hereby appoint the Patent Practitioner(s) associated with the following Customer Number as my/our attorney(s) or agent(s), and to transact all business in the United States Patent and Trademark Office connected therewith for the application referenced in the attached transmittal letter (form PTO/AIA/82A) or identified above: 000112823

**OR**

☐ I hereby appoint Practitioner(s) named in the attached list (form PTO/AIA/82C) as my/our attorney(s) or agent(s), and to transact all business in the United States Patent and Trademark Office connected therewith for the patent application referenced in the attached transmittal letter (form PTO/AIA/82A) or identified above. (Note: Complete form PTO/AIA/82C.)

**Please recognize or change the correspondence address for the application identified in the attached transmittal letter or the boxes above to:**

☐ The address associated with the above-mentioned Customer Number

**OR**

☑ The address associated with Customer Number: 000112823

**OR**

| | | | | | |
|---|---|---|---|---|---|
| Firm or Individual Name | | | | | |
| Address | | | | | |
| City | | State | | Zip | |
| Country | | | | | |
| Telephone | | Email | | | |

I am the Applicant (if the Applicant is a juristic entity, list the Applicant name in the box):

☑ Inventor or Joint Inventor (title not required below)

☐ Legal Representative of a Deceased or Legally Incapacitated Inventor (title not required below)

☐ Assignee or Person to Whom the Inventor is Under an Obligation to Assign (provide signer's title if applicant is a juristic entity)

☐ Person Who Otherwise Shows Sufficient Proprietary Interest (e.g., a petition under 37 CFR 1.46(b)(2) was granted in the application or is concurrently being filed with this document) (provide signer's title if applicant is a juristic entity)

**SIGNATURE of Applicant for Patent**

The undersigned (whose title is supplied below) is authorized to act on behalf of the applicant (e.g., where the applicant is a juristic entity).

| | | | |
|---|---|---|---|
| Signature | Brandon Kofford | Date (Optional) | 10-07-2019 |
| Name | Brandon D Kofford | | |
| Title | | | |

**NOTE:** Signature - This form must be signed by the applicant in accordance with 37 CFR 1.33. See 37 CFR 1.4 for signature requirements and certifications. If more than one applicant, use multiple forms.

☑ Total of 2 forms are submitted.

This collection of information is required by 37 CFR 1.131, 1.32, and 1.33. The information is required to obtain or retain a benefit by the public which is to file (and by the USPTO to process) an application. Confidentiality is governed by 35 U.S.C. 122 and 37 CFR 1.11 and 1.14. This collection is estimated to take 3 minutes to complete, including gathering, preparing, and submitting the completed application form to the USPTO. Time will vary depending upon the individual case. Any comments on the amount of time you require to complete this form and/or suggestions for reducing this burden, should be sent to the Chief Information Officer, U.S. Patent and Trademark Office, U.S. Department of Commerce, P.O. Box 1450, Alexandria, VA 22313-1450. DO NOT SEND FEES OR COMPLETED FORMS TO THIS ADDRESS. **SEND TO: Commissioner for Patents, P.O. Box 1450, Alexandria, VA 22313-1450.**

*If you need assistance in completing the form, call 1-800-PTO-9199 and select option 2.*

PTO/AIA/82C (07-13)
Approved for use through 11/30/2014. OMB 0651-0051
U.S. Patent and Trademark Office; U.S. DEPARTMENT OF COMMERCE
Under the Paperwork Reduction Act of 1995, no persons are required to respond to a collection of information unless it displays a valid OMB control number

# POWER OF ATTORNEY BY APPLICANT

No more than ten (10) patent practitioners total may be appointed as set forth below by name and registration number. This page need not be submitted if appointing the Patent Practitioner(s) associated with a Customer Number (see form PTO/AIA/82B):

| Name | Registration Number |
|---|---|
| | |
| | |
| | |
| | |
| | |
| | |
| | |
| | |
| | |
| | |

# Privacy Act Statement

The **Privacy Act of 1974 (P.L. 93-579)** requires that you be given certain information in connection with your submission of the attached form related to a patent application or patent. Accordingly, pursuant to the requirements of the Act, please be advised that: (1) the general authority for the collection of this information is 35 U.S.C. 2(b)(2); (2) furnishing of the information solicited is voluntary; and (3) the principal purpose for which the information is used by the U.S. Patent and Trademark Office is to process and/or examine your submission related to a patent application or patent. If you do not furnish the requested information, the U.S. Patent and Trademark Office may not be able to process and/or examine your submission, which may result in termination of proceedings or abandonment of the application or expiration of the patent.

The information provided by you in this form will be subject to the following routine uses:

1. The information on this form will be treated confidentially to the extent allowed under the Freedom of Information Act (5 U.S.C. 552) and the Privacy Act (5 U.S.C. 552a). Records from this system of records may be disclosed to the Department of Justice to determine whether the Freedom of Information Act requires disclosure of these records.
2. A record from this system of records may be disclosed, as a routine use, in the course of presenting evidence to a court, magistrate, or administrative tribunal, including disclosures to opposing counsel in the course of settlement negotiations.
3. A record in this system of records may be disclosed, as a routine use, to a Member of Congress submitting a request involving an individual, to whom the record pertains, when the individual has requested assistance from the Member with respect to the subject matter of the record.
4. A record in this system of records may be disclosed, as a routine use, to a contractor of the Agency having need for the information in order to perform a contract. Recipients of information shall be required to comply with the requirements of the Privacy Act of 1974, as amended, pursuant to 5 U.S.C. 552a(m).
5. A record related to an International Application filed under the Patent Cooperation Treaty in this system of records may be disclosed, as a routine use, to the International Bureau of the World Intellectual Property Organization, pursuant to the Patent Cooperation Treaty.
6. A record in this system of records may be disclosed, as a routine use, to another federal agency for purposes of National Security review (35 U.S.C. 181) and for review pursuant to the Atomic Energy Act (42 U.S.C. 218(c)).
7. A record from this system of records may be disclosed, as a routine use, to the Administrator, General Services, or his/her designee, during an inspection of records conducted by GSA as part of that agency's responsibility to recommend improvements in records management practices and programs, under authority of 44 U.S.C. 2904 and 2906. Such disclosure shall be made in accordance with the GSA regulations governing inspection of records for this purpose, and any other relevant (i.e., GSA or Commerce) directive. Such disclosure shall not be used to make determinations about individuals.
8. A record from this system of records may be disclosed, as a routine use, to the public after either publication of the application pursuant to 35 U.S.C. 122(b) or issuance of a patent pursuant to 35 U.S.C. 151. Further, a record may be disclosed, subject to the limitations of 37 CFR 1.14, as a routine use, to the public if the record was filed in an application which became abandoned or in which the proceedings were terminated and which application is referenced by either a published application, an application open to public inspections or an issued patent.
9. A record from this system of records may be disclosed, as a routine use, to a Federal, State, or local law enforcement agency, if the USPTO becomes aware of a violation or potential violation of law or regulation.



Straumann USA Exhibit 1012

# Electronic Acknowledgement Receipt

| | |
|---|---|
| **EFS ID:** | 37395282 |
| **Application Number:** | 16596361 |
| **International Application Number:** | |
| **Confirmation Number:** | 3385 |
| **Title of Invention:** | SCREW-ATTACHED PICK-UP DENTAL COPING SYSTEMS AND METHODS |
| **First Named Inventor/Applicant Name:** | Brandon Dale Kofford |
| **Customer Number:** | 112823 |
| **Filer:** | Daniel John Whittle |
| **Filer Authorized By:** | |
| **Attorney Docket Number:** | SDC001 |
| **Receipt Date:** | 08-OCT-2019 |
| **Filing Date:** | |
| **Time Stamp:** | 17:16:13 |
| **Application Type:** | Utility under 35 USC 111(a) |

## Payment information:

| | |
|---|---|
| Submitted with Payment | yes |
| Payment Type | CARD |
| Payment was successfully received in RAM | $785 |
| RAM confirmation Number | E201908H19048095 |
| Deposit Account | |
| Authorized User | |
| The Director of the USPTO is hereby authorized to charge indicated fees and credit any overpayment as follows: | |

## File Listing:

| Document Number | Document Description | File Name | File Size(Bytes)/ Message Digest | Multi Part /.zip | Pages (if appl.) |
|---|---|---|---|---|---|
| 1 | Drawings-only black and white line drawings | NPP-SF-08oct2019.pdf | 707142<br>aaef3f045792b7f76d5b3ae931c0542529419b45 | no | 26 |
| **Warnings:** | | | | | |
| **Information:** | | | | | |
| 2 | Claims | SDC001Claims.pdf | 117295<br>ce1482ed2c37f9f8dabb46b5919d6df40dc7f045 | no | 4 |
| **Warnings:** | | | | | |
| **Information:** | | | | | |
| 3 | Application Data Sheet | SDC001aia0014.pdf | 1823212<br>e10282678cd86555a2980209ee49bd9364de87a3 | no | 9 |
| **Warnings:** | | | | | |
| **Information:** | | | | | |
| 4 | Transmittal of New Application | aia0015SDC001.pdf | 276588<br>7582ddcf9bc95f7a16d0f142fb9c6835244ee1f7 | no | 2 |
| **Warnings:** | | | | | |
| **Information:** | | | | | |
| 5 | First Action Interview - Enrollment Request | sb0413cSDC001.pdf | 621452<br>6f7de83779730a5c19deacefdab3b0e61fa3d8ac | no | 3 |
| **Warnings:** | | | | | |
| **Information:** | | | | | |
| 6 | Oath or Declaration filed | aia0001SDC001CAR-signed.pdf | 258932<br>d92b6cc21165b0dffe739f0b0e819664cb924589 | no | 2 |
| **Warnings:** | | | | | |
| **Information:** | | | | | |

| | | | | | |
|---|---|---|---|---|---|
| 7 | Oath or Declaration filed | SDC001AIA01BDK.pdf | 874283<br>0a34eed1ce0fdb7b057dc918f996c02ed03d2010 | no | 3 |
| **Warnings:** | | | | | |
| **Information:** | | | | | |
| 8 | Power of Attorney | aia0082SDC001CAR-signed.pdf | 271908<br>6578a13781806520ed44881d78272685e3fc6890 | no | 4 |
| **Warnings:** | | | | | |
| **Information:** | | | | | |
| 9 | Power of Attorney | SDC001AIA82BDK.pdf | 820252<br>74e191c7295d9012fb673f91f5de07672dffc2aa | no | 3 |
| **Warnings:** | | | | | |
| **Information:** | | | | | |
| 10 | Specification | SDC001SPEC108f.pdf | 305686<br>3f8cbc1086fdfb18a0adba0d33839e6772a64b97 | no | 43 |
| **Warnings:** | | | | | |
| **Information:** | | | | | |
| 11 | Fee Worksheet (SB06) | fee-info.pdf | 34937<br>272980d765de853583803737d5ccbdf62811d19a | no | 2 |
| **Warnings:** | | | | | |
| **Information:** | | | | | |
| | | | **Total Files Size (in bytes):** | 6111687 | |

**This Acknowledgement Receipt evidences receipt on the noted date by the USPTO of the indicated documents, characterized by the applicant, and including page counts, where applicable. It serves as evidence of receipt similar to a Post Card, as described in MPEP 503.**

**New Applications Under 35 U.S.C. 111**
**If a new application is being filed and the application includes the necessary components for a filing date (see 37 CFR 1.53(b)-(d) and MPEP 506), a Filing Receipt (37 CFR 1.54) will be issued in due course and the date shown on this Acknowledgement Receipt will establish the filing date of the application.**
**National Stage of an International Application under 35 U.S.C. 371**
**If a timely submission to enter the national stage of an international application is compliant with the conditions of 35 U.S.C. 371 and other applicable requirements a Form PCT/DO/EO/903 indicating acceptance of the application as a national stage submission under 35 U.S.C. 371 will be issued in addition to the Filing Receipt, in due course.**
**New International Application Filed with the USPTO as a Receiving Office**
**If a new international application is being filed and the international application includes the necessary components for an international filing date (see PCT Article 11 and MPEP 1810), a Notification of the International Application Number and of the International Filing Date (Form PCT/RO/105) will be issued in due course, subject to prescriptions concerning national security, and the date shown on this Acknowledgement Receipt will establish the international filing date of the application.**

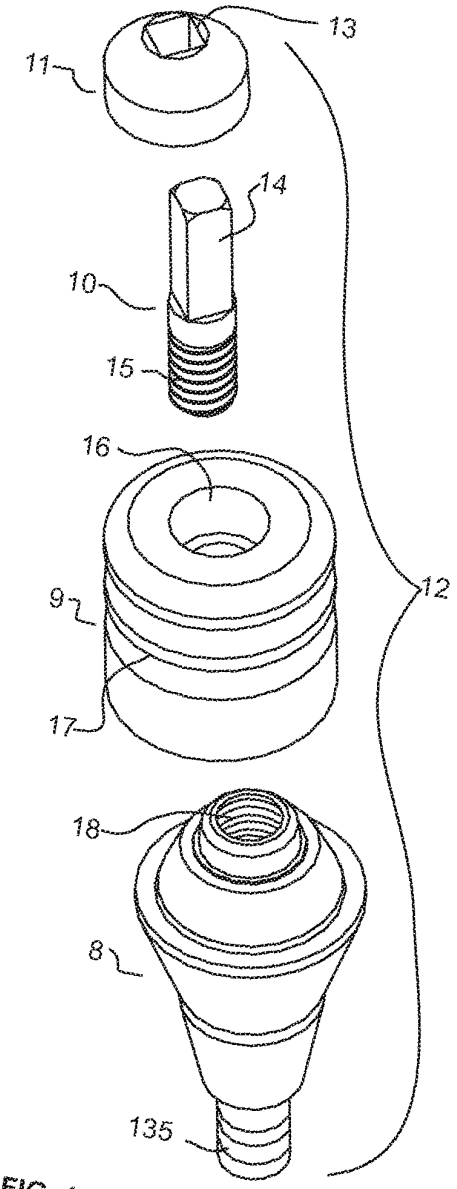


FIG. 1

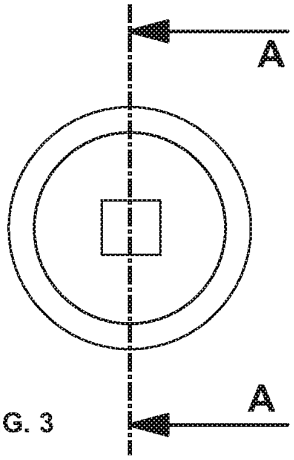


FIG. 3

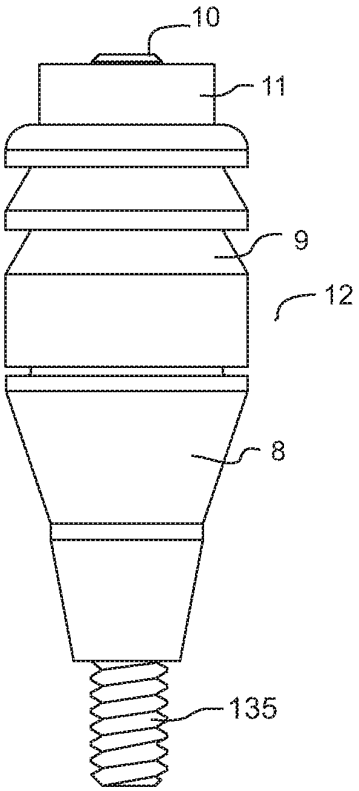


FIG. 2

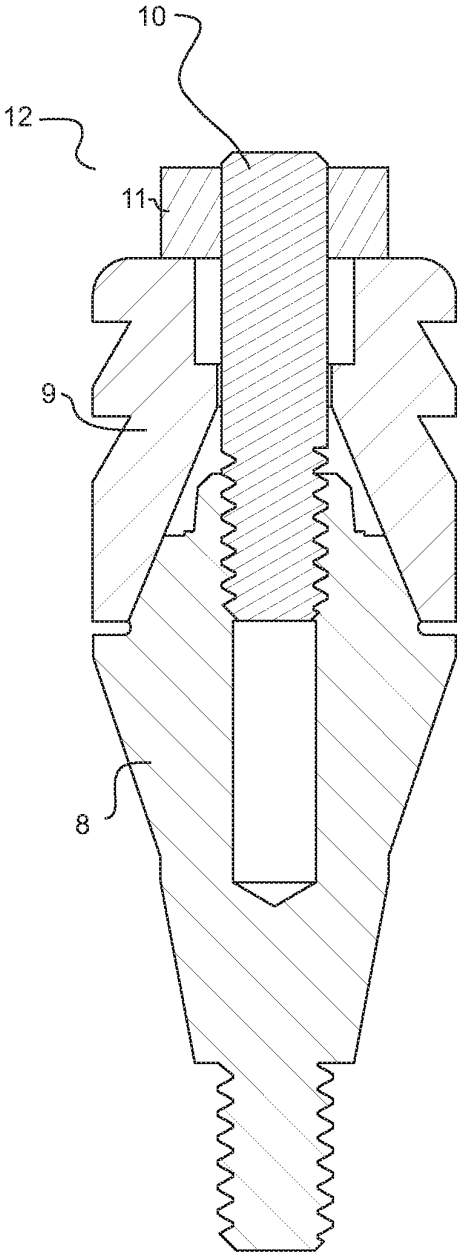


FIG. 4

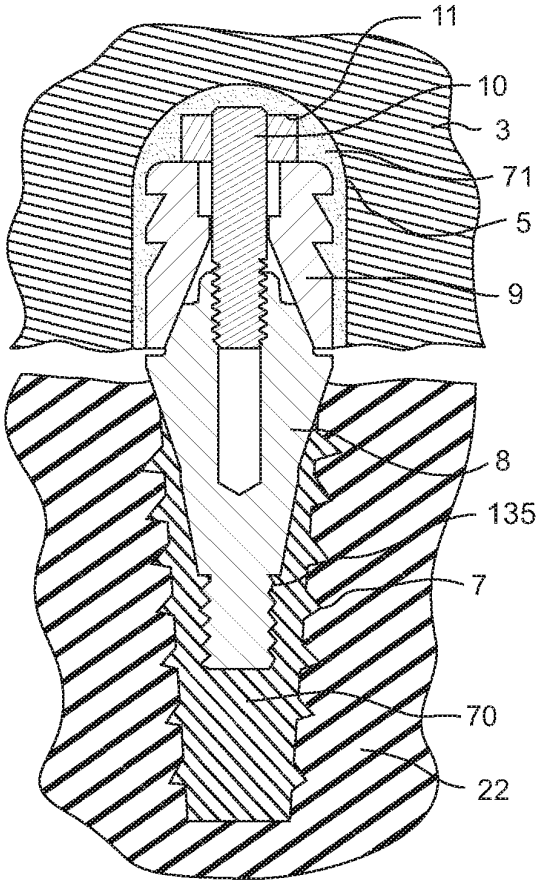


FIG. 5

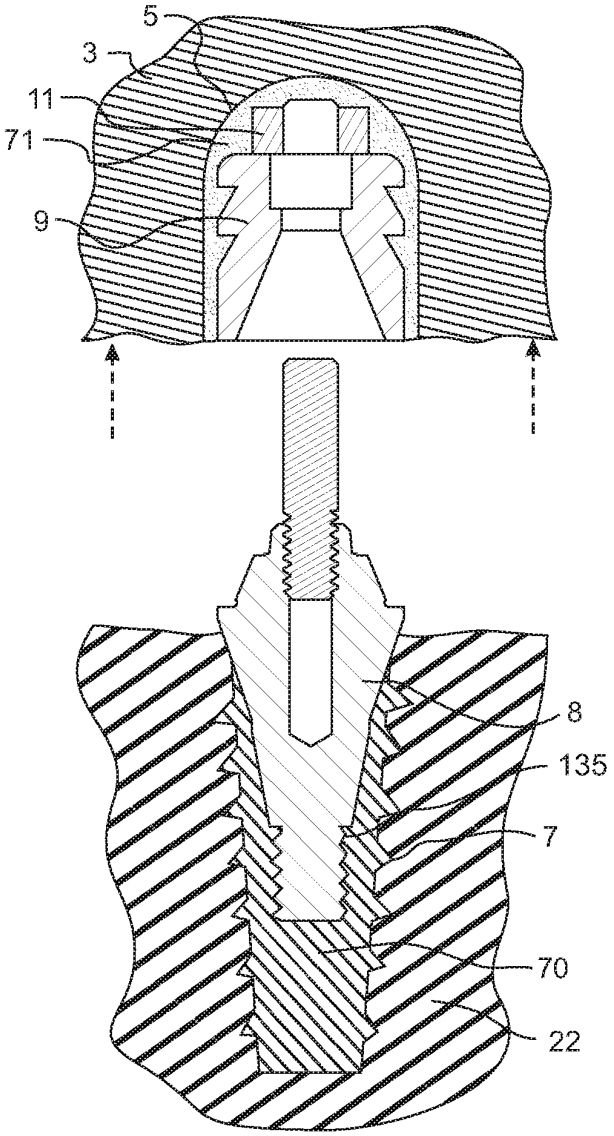


FIG. 6

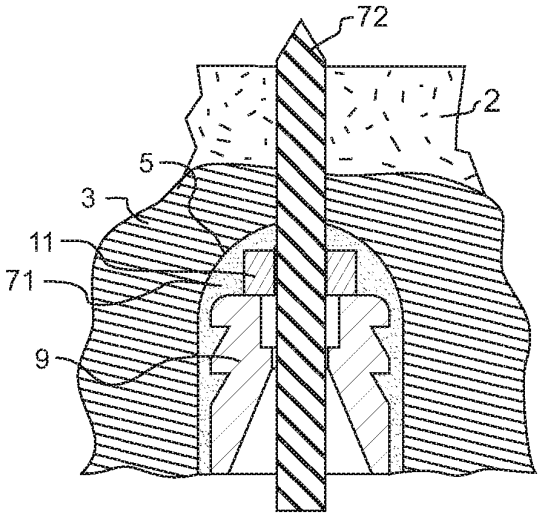


FIG. 7

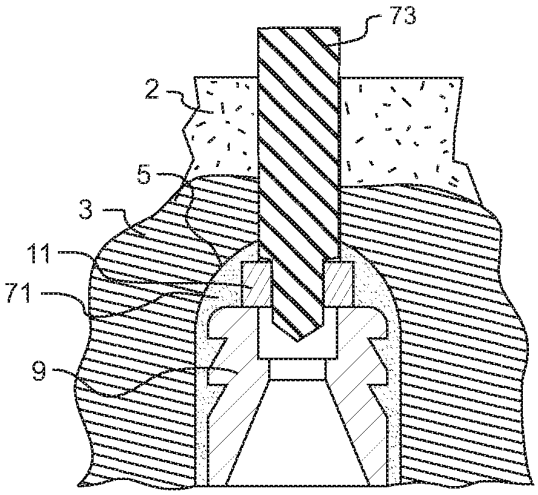


FIG. 8

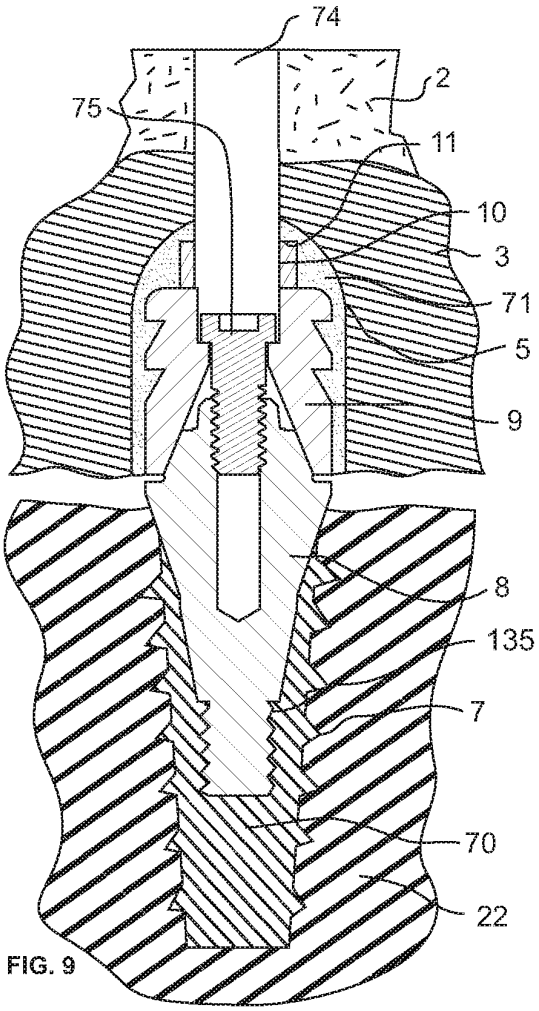


FIG. 9

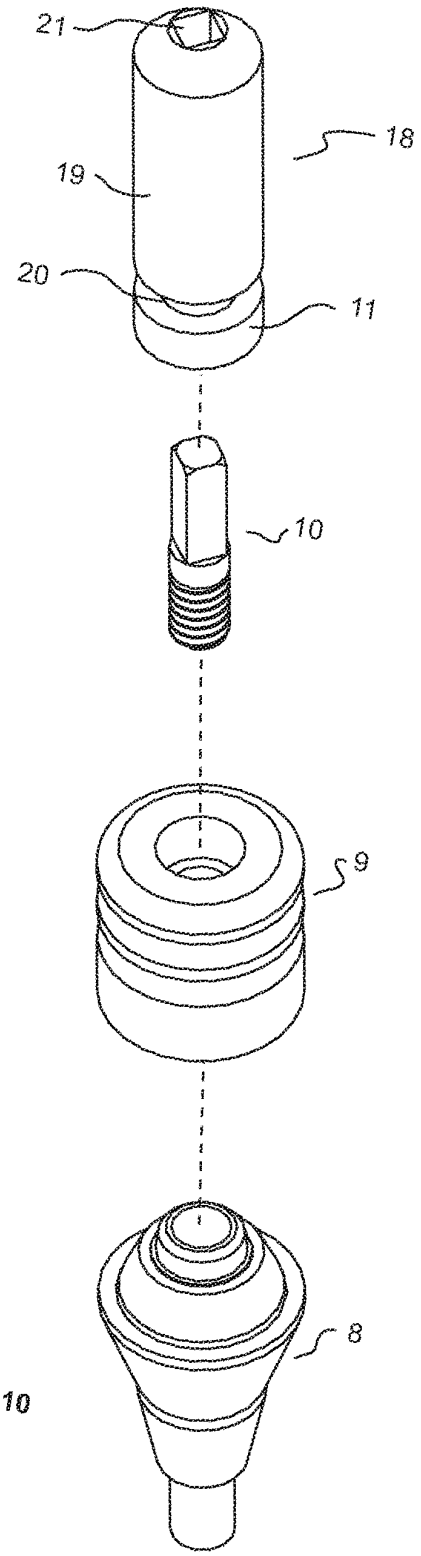


FIG. 10

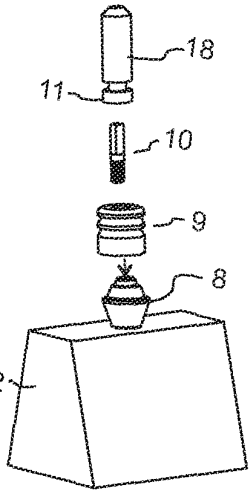


FIG. 11

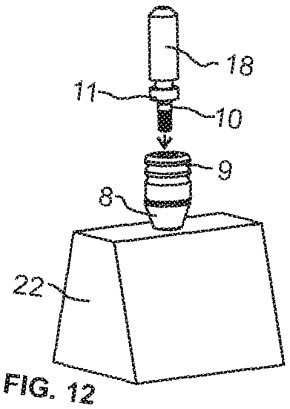


FIG. 12

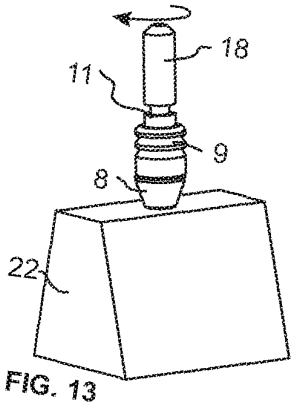


FIG. 13

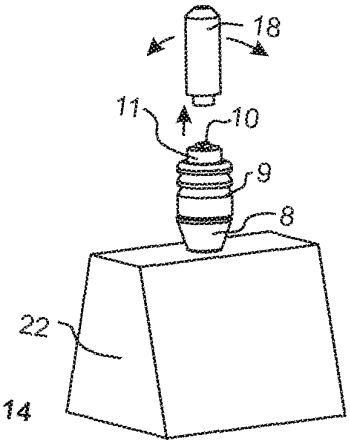


FIG. 14

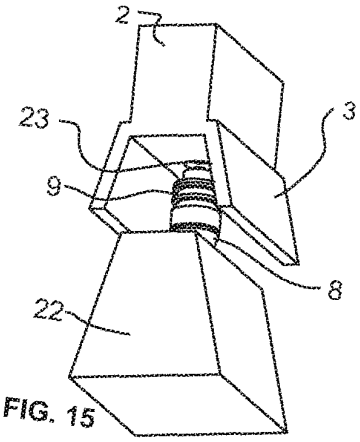


FIG. 15

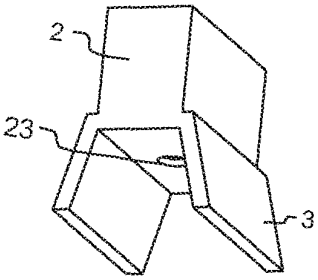


FIG. 16

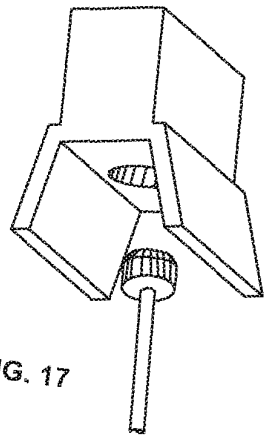

FIG. 17

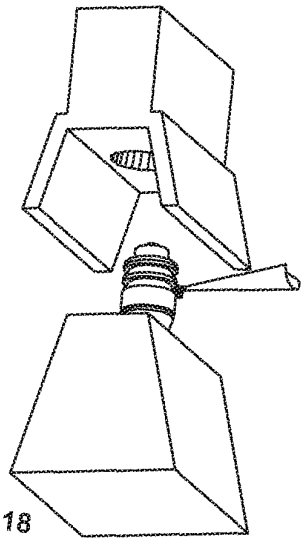

FIG. 18

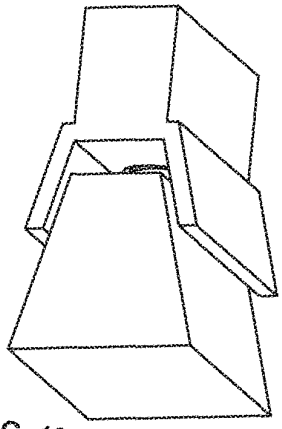

FIG. 19

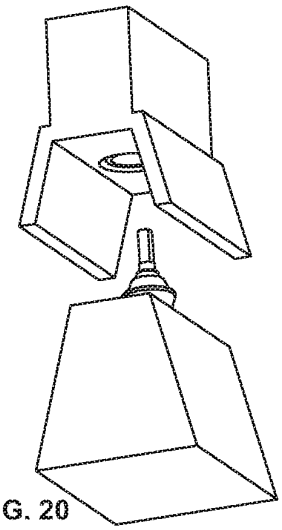

FIG. 20

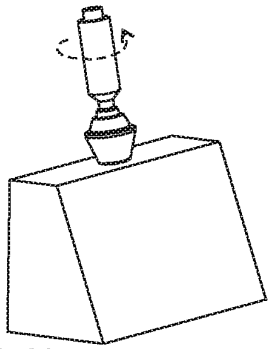

FIG. 21

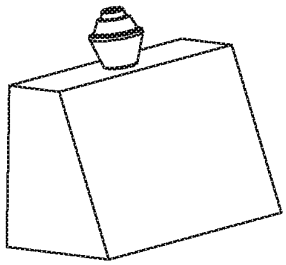

FIG. 22

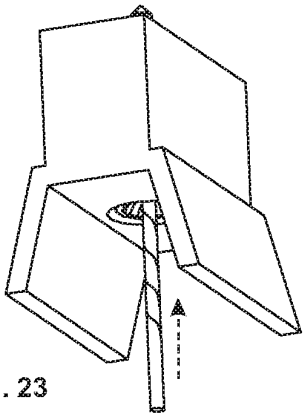

FIG. 23

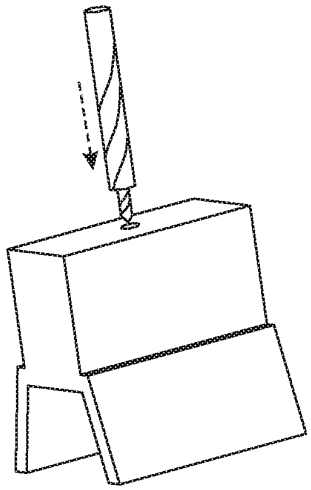

FIG. 24

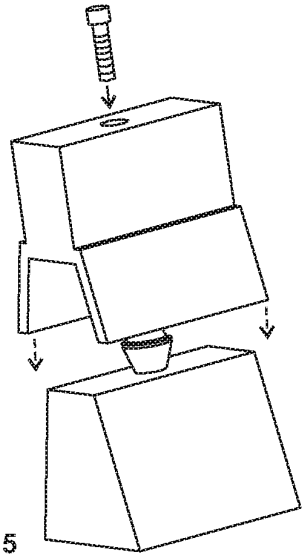

FIG. 25

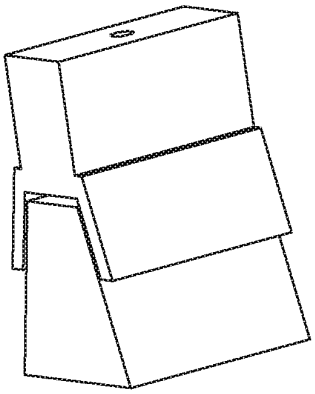

FIG. 26

Install implant abutments.

↓

Place bite-registration material or PVS putty into the intaglio side of the prosthesis.

↓

Place PTFE tape as a barrier to prevent bite-registration material from engaging coping features.

↓

Create wells in prosthesis to accommodate the space required for the copings.

↓

Fasten copings to abutments with temporary alignment fasteners.

↓

Place prosthesis over copings.

↓

Verify prosthesis passivity, by instructing or manipulating patient close into bite. Prosthesis should fully seat into ideal occlusion.

↓

Block-out any undercuts to the abutment or coping using a resilient block-out material.

↓

Place pick-up material in the wells in the intaglio side of the prosthesis, and around the copings in the mouth.

↓

Seat prosthesis onto copings and have patient hold bite until pickup material sets. If sedated, hold the lower jaw in a closed position using bimanual manipulation.

↓

Pry prosthesis, with copings bonded in prosthesis, from temporary alignment fastener posts.

↓

Remove temporary alignment fastener threaded posts from abutments.

↓

Evaluate pick-up material around the copings. If copings are not encased in pick-up material, add material to fully encase the copings; cure pick-up material.

↓

Create pilot holes for screw-access hole from the intaglio side through the coping screw hole bores, through the prosthesis occlusal surface.

↓

Drill screw access holes from occlusal or cameo surface down to copings using pilot hole as a guide.

↓

Clear out any remnants of temporary alignment fastener caps from copings; test clearance and fit of definitive prosthetic screw with laboratory analogs.

↓

Final contour and polish proshtesis.

↓

Deliver completed prosthesis using definitive prosthetic screws; torque to manufacturer's spec.

FIG. 27

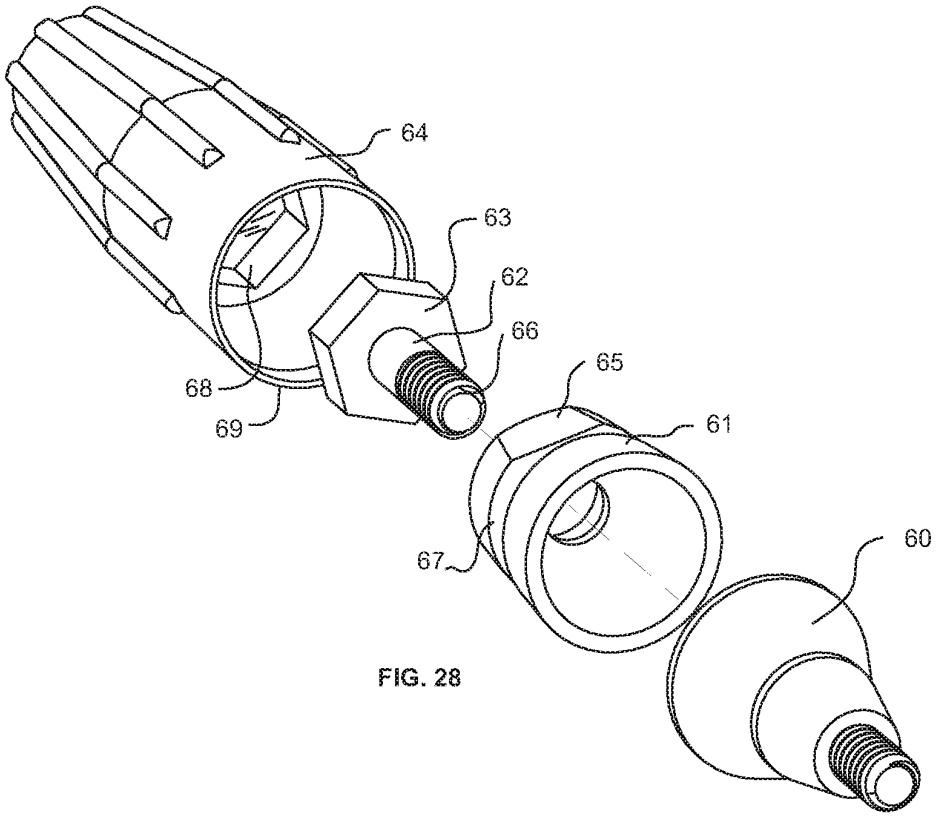


FIG. 28

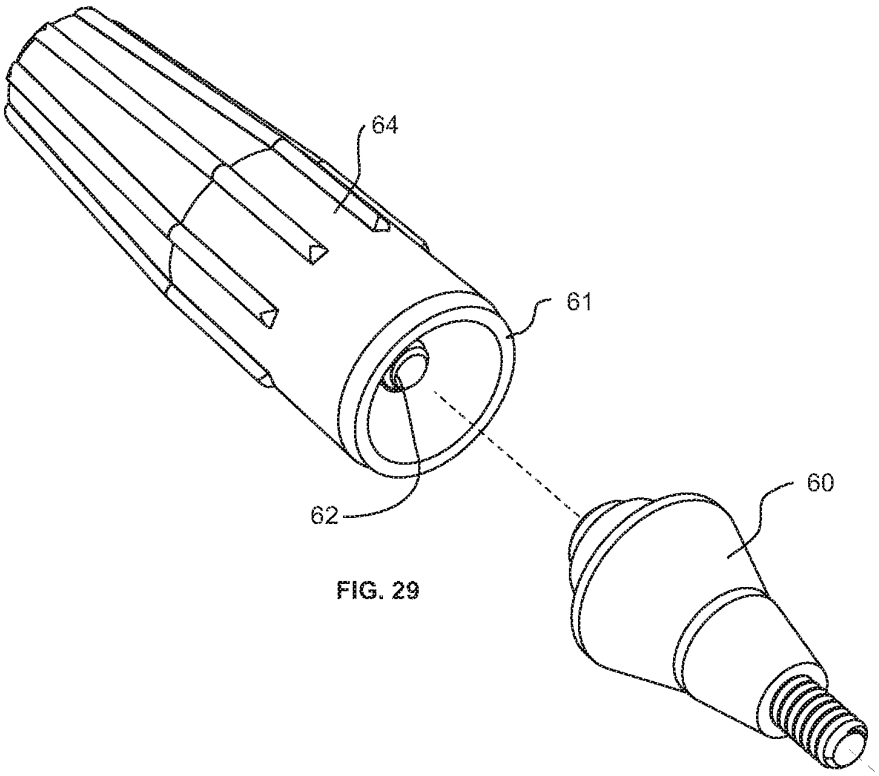


FIG. 29

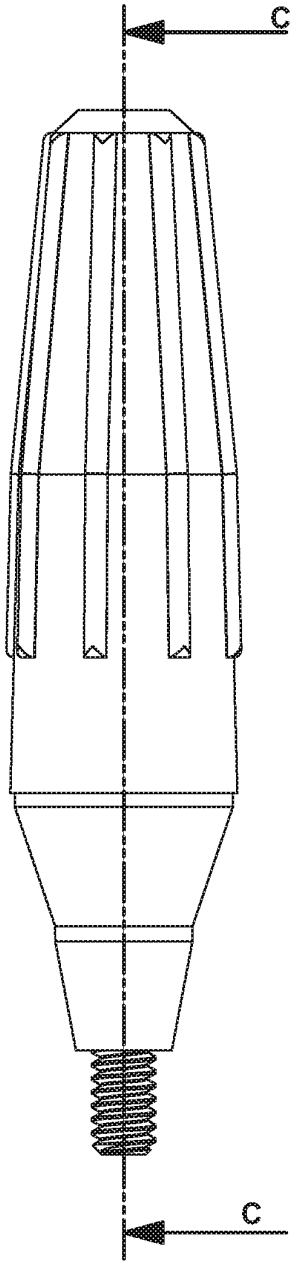


FIG. 30

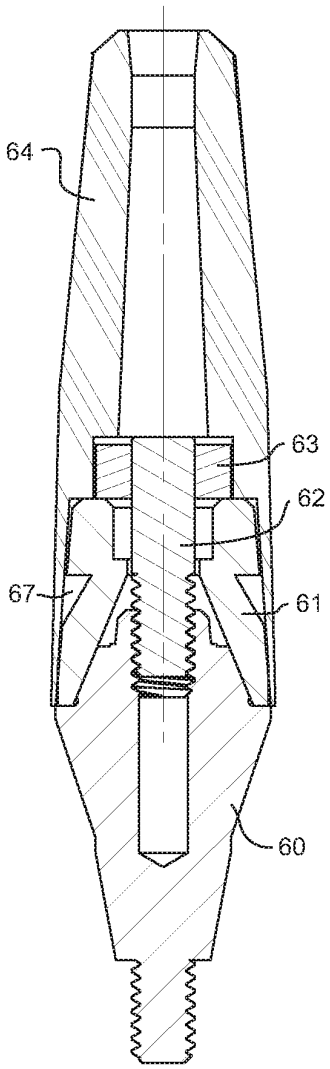


FIG. 31

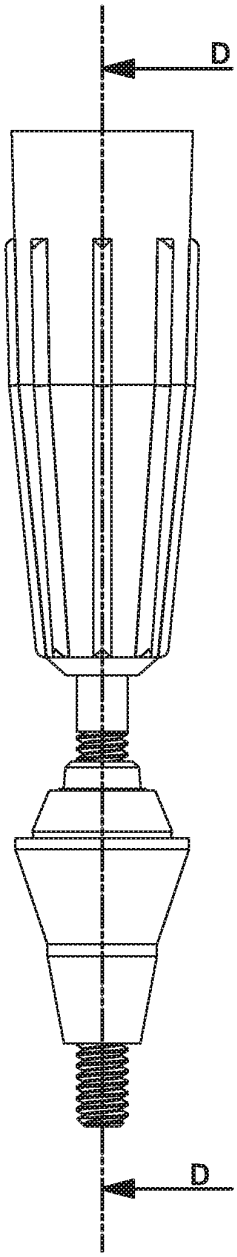


FIG. 32

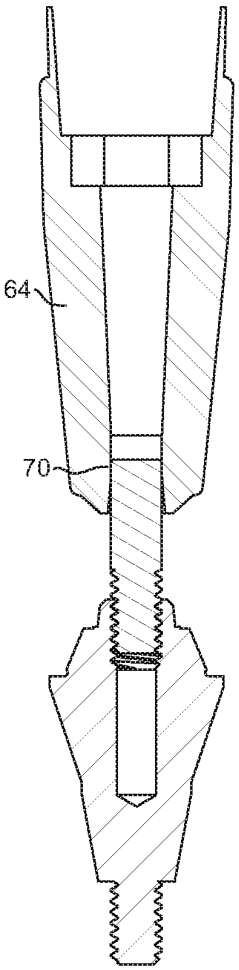


FIG. 33

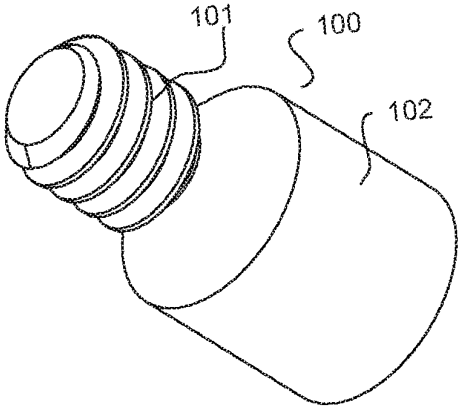


FIG. 35

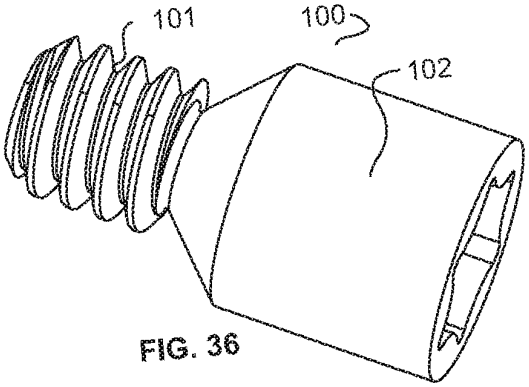


FIG. 36

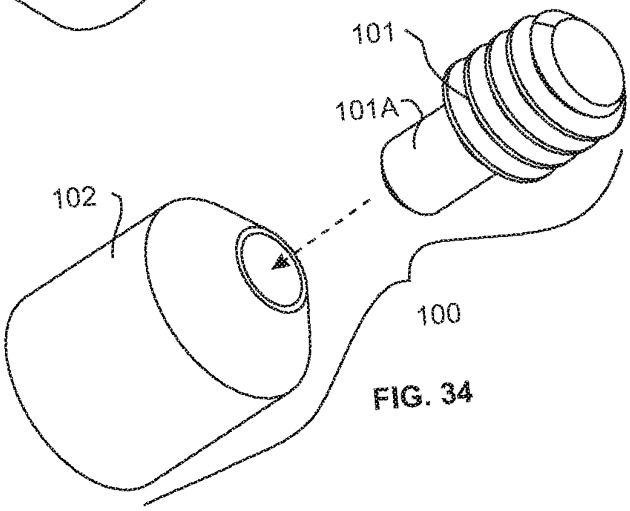


FIG. 34

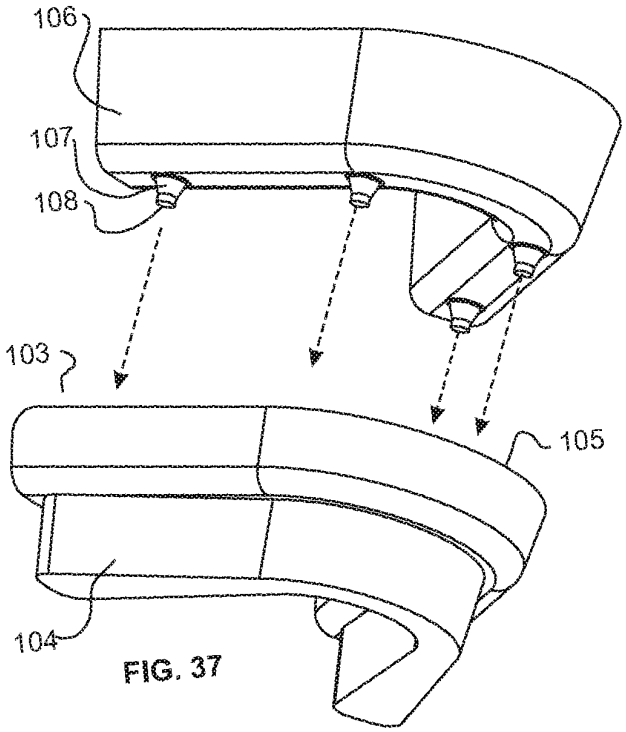


FIG. 37

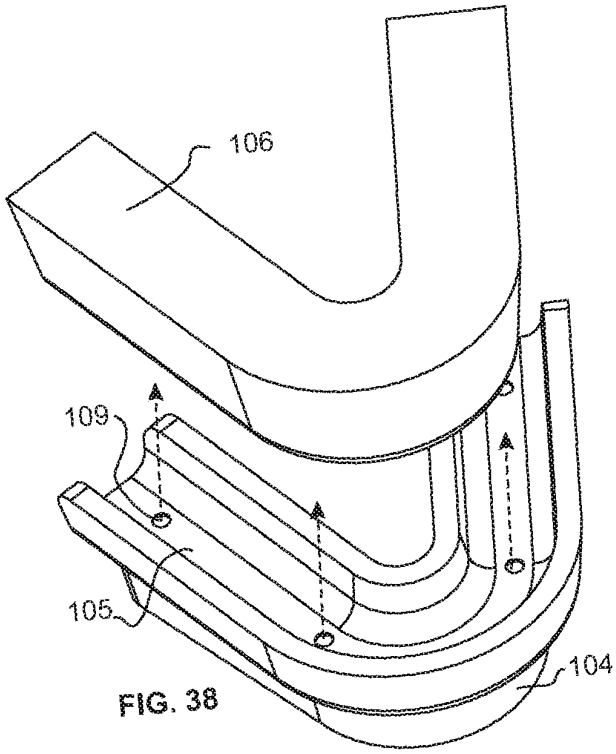


FIG. 38

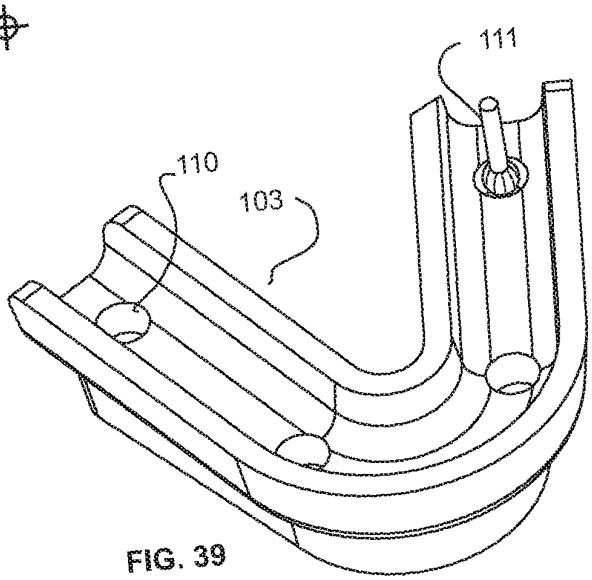


FIG. 39

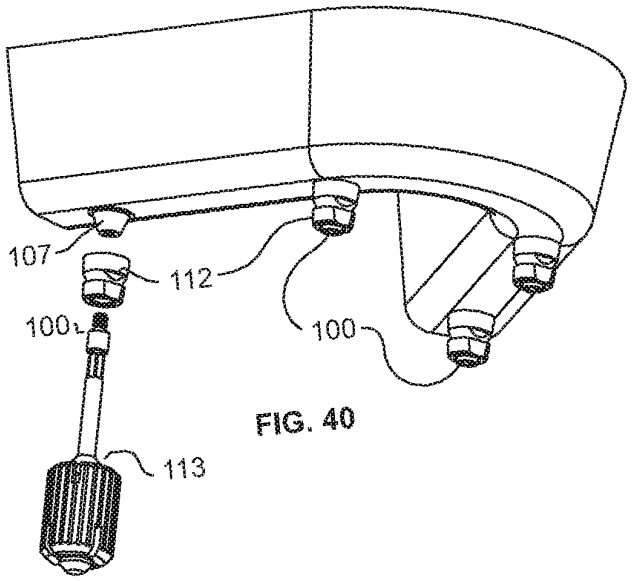


FIG. 40

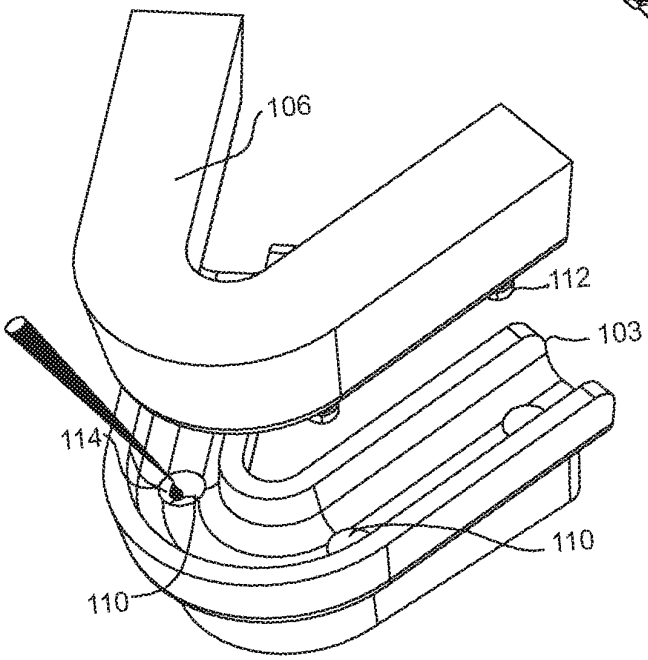


FIG. 41

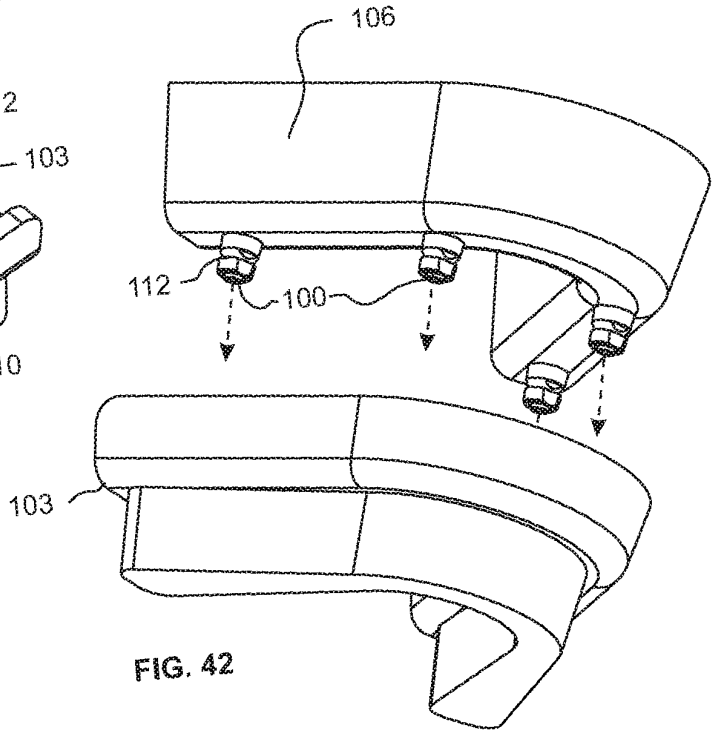


FIG. 42

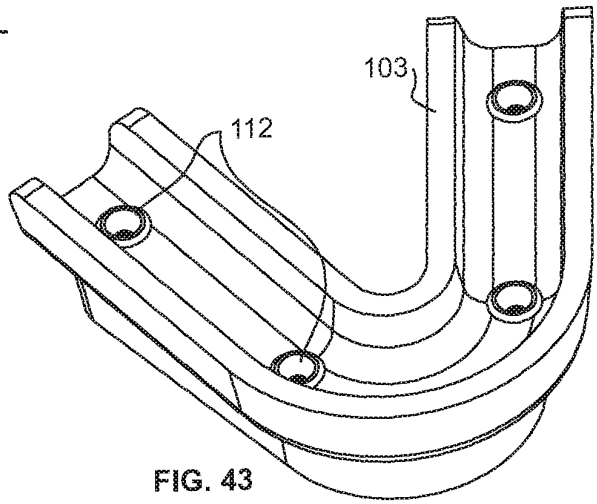


FIG. 43

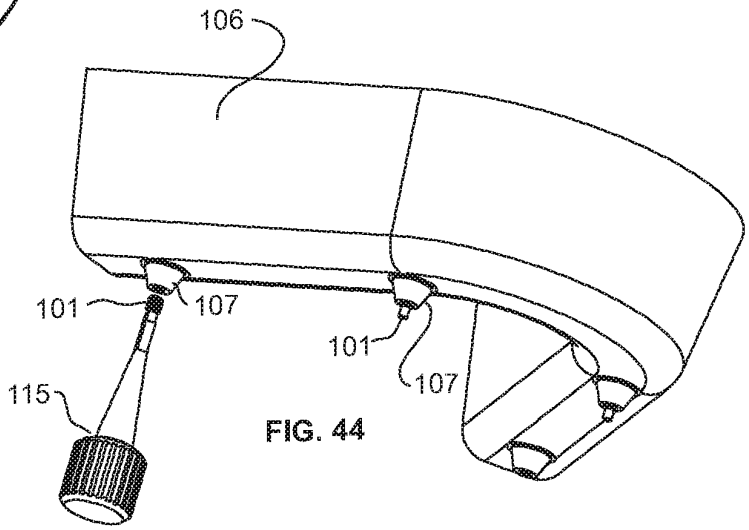


FIG. 44

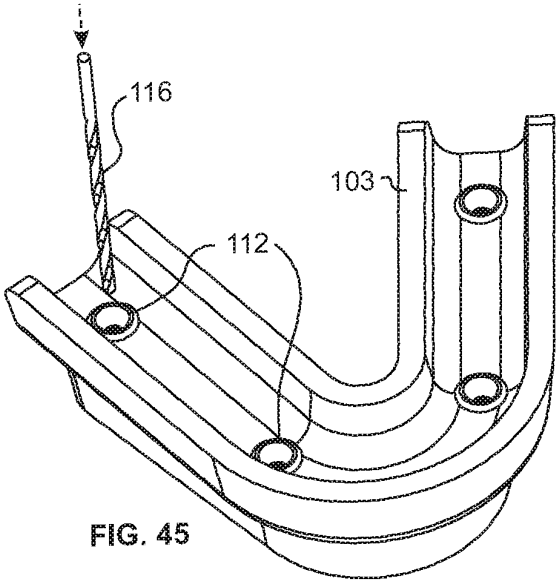


FIG. 45

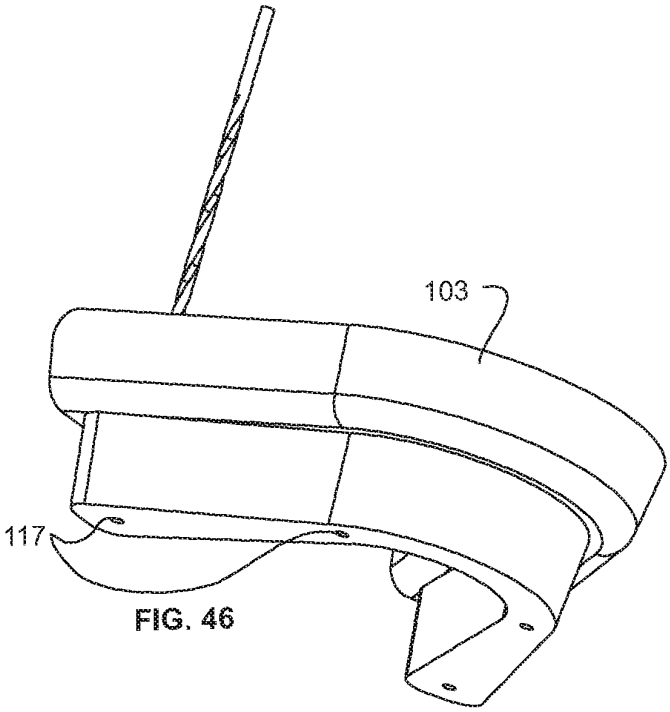


FIG. 46

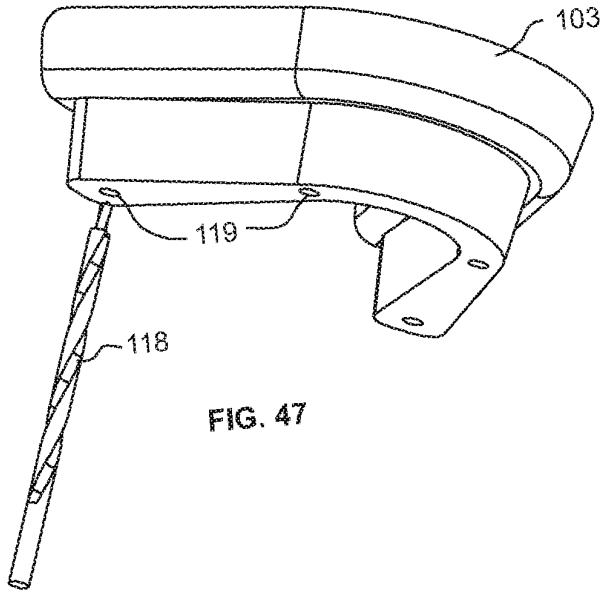


FIG. 47

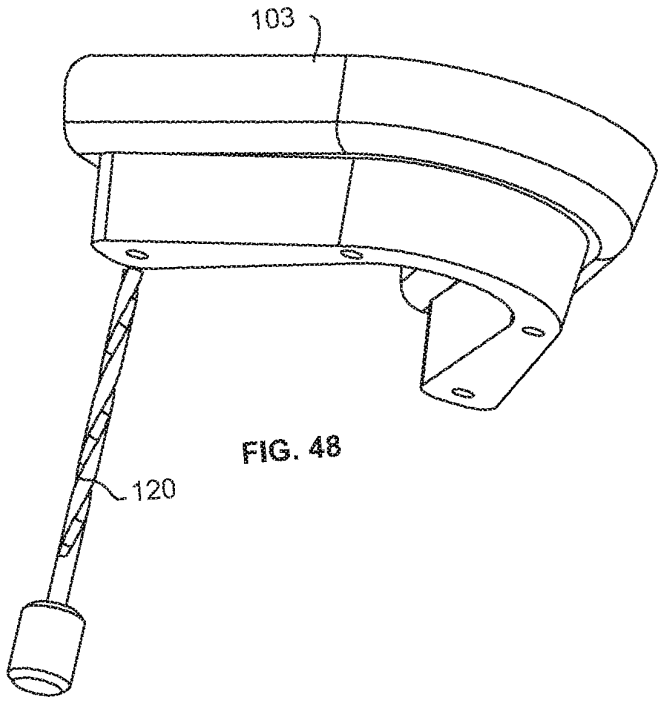


FIG. 48

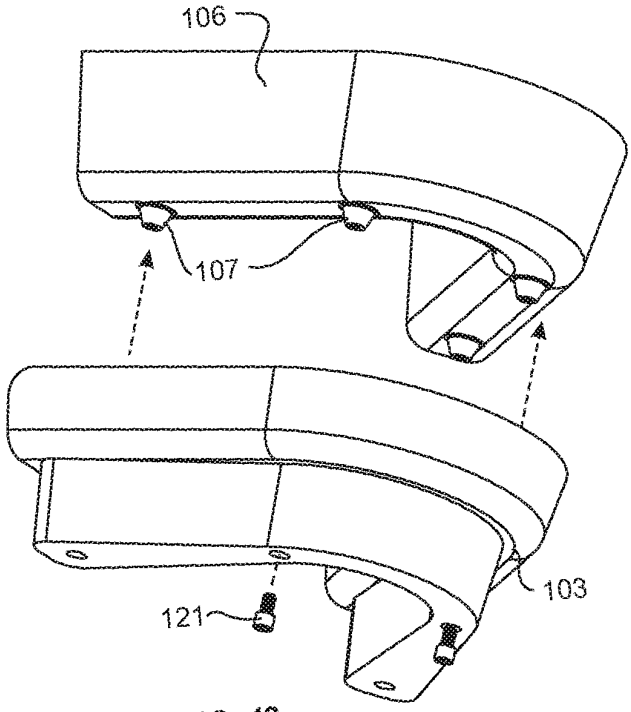


FIG. 49

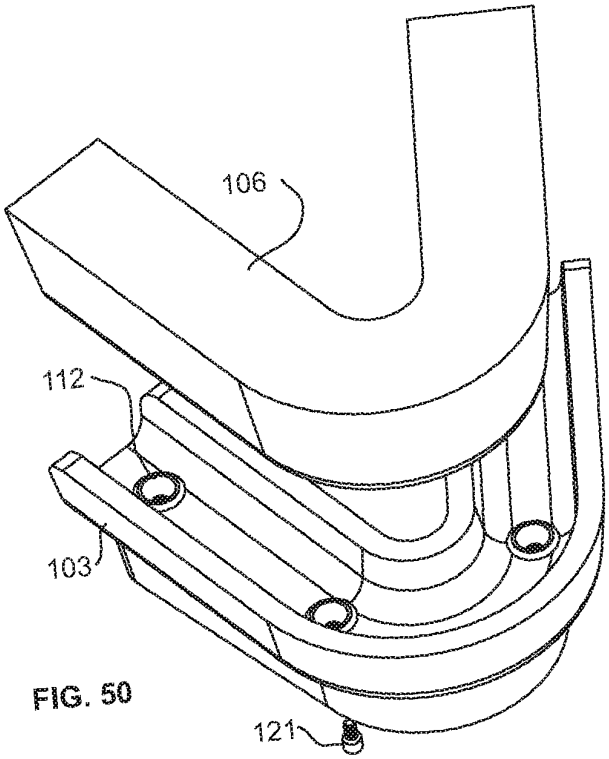


FIG. 50

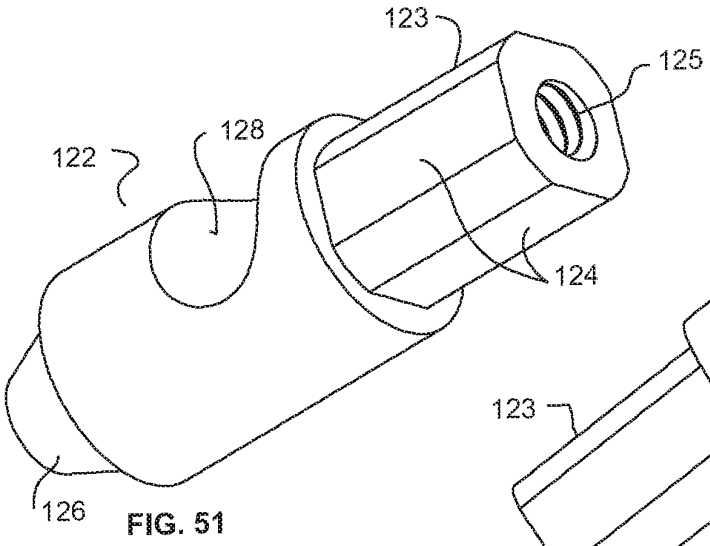


FIG. 51

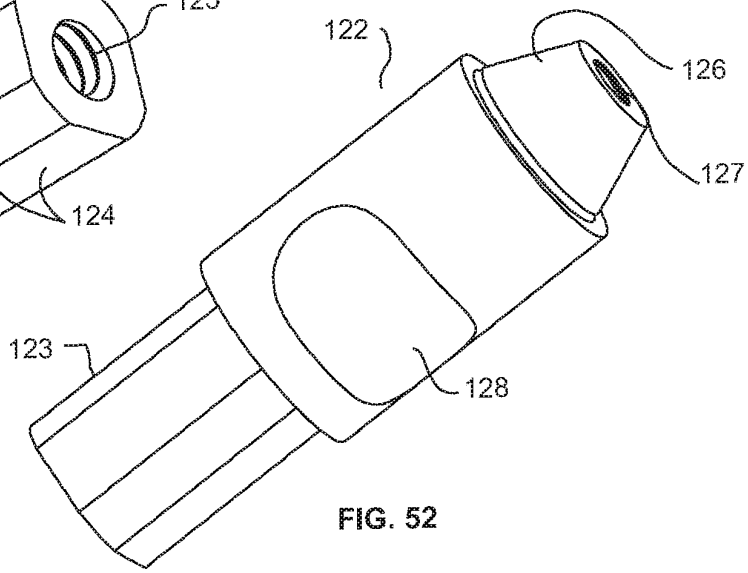


FIG. 52

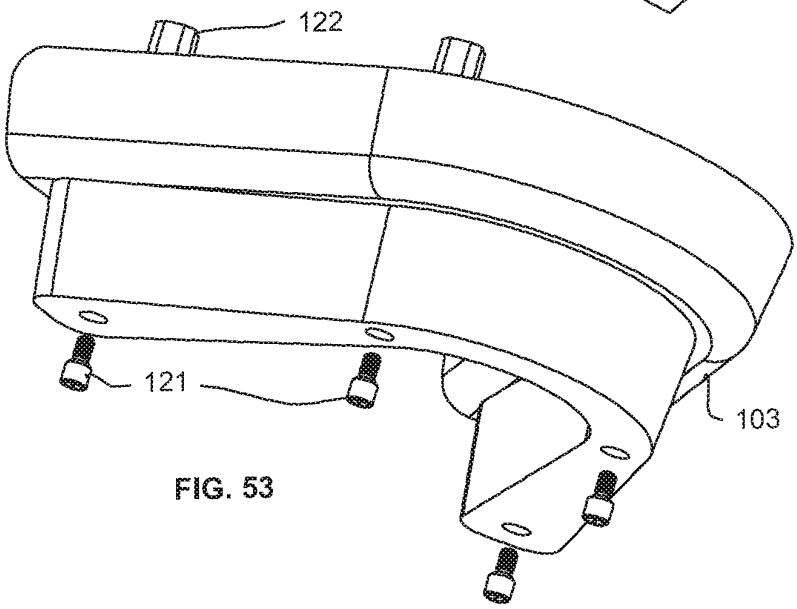


FIG. 53

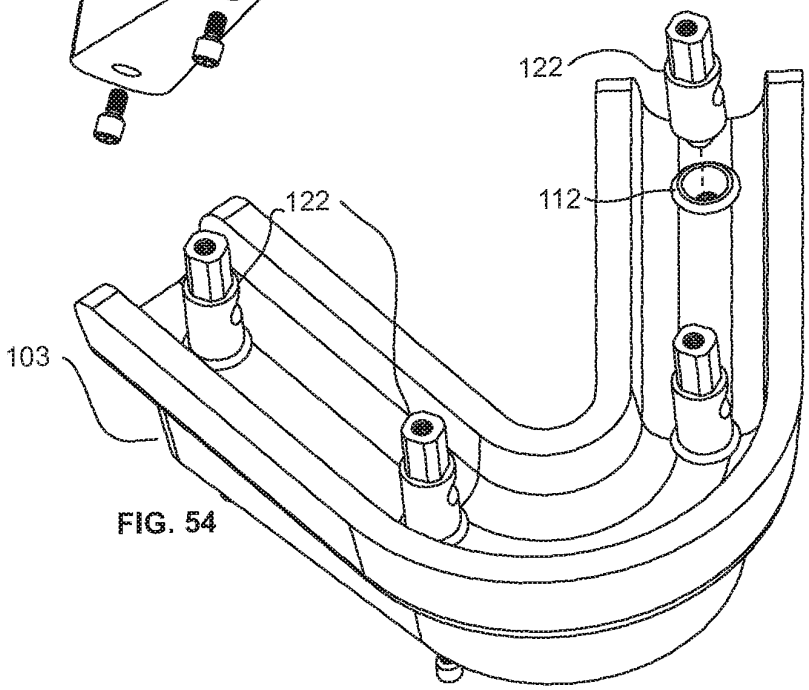


FIG. 54

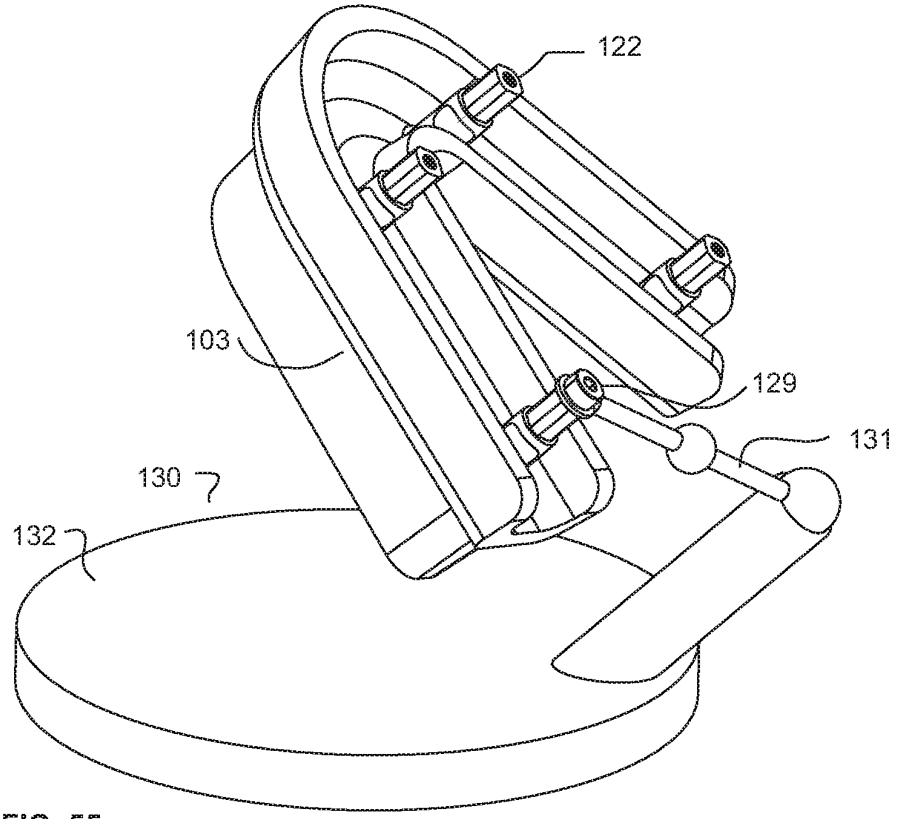


FIG. 55

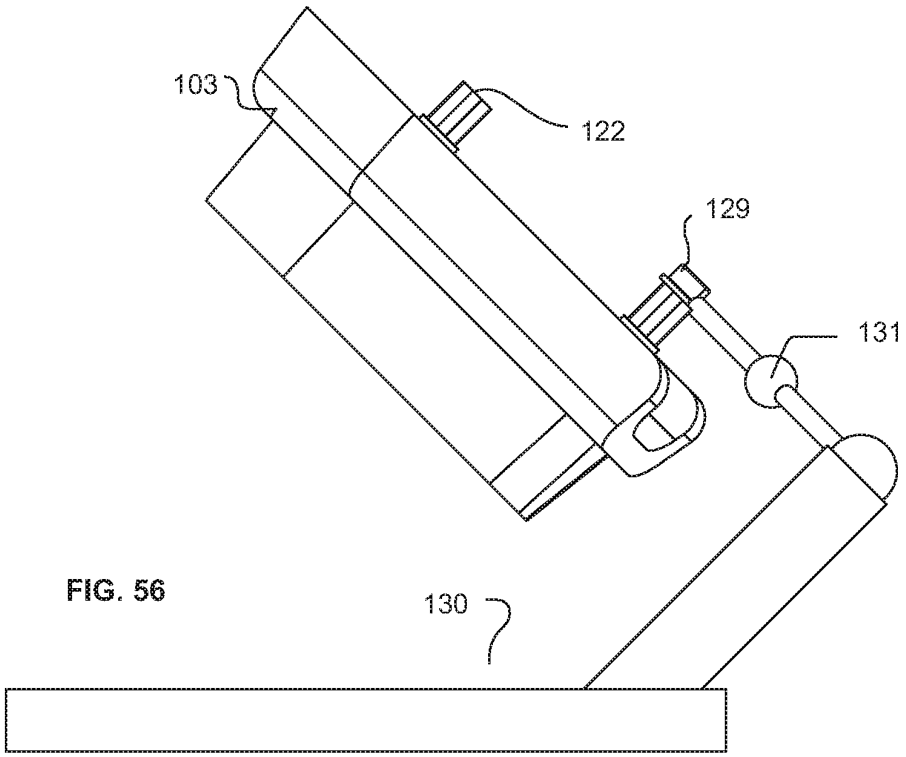


FIG. 56

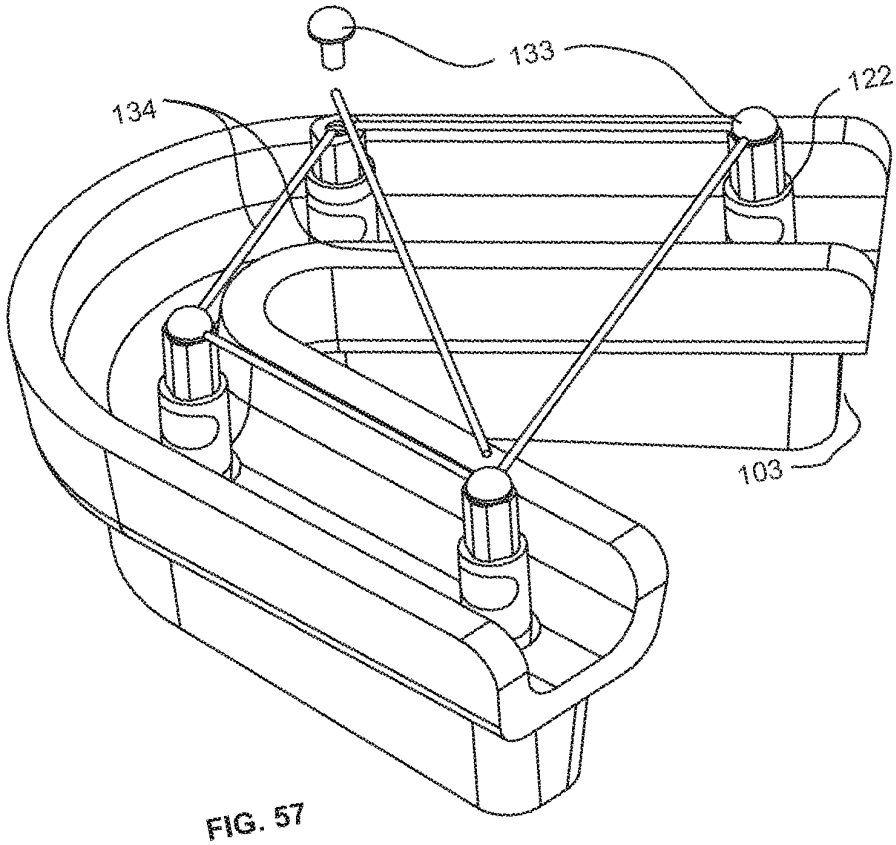


FIG. 57

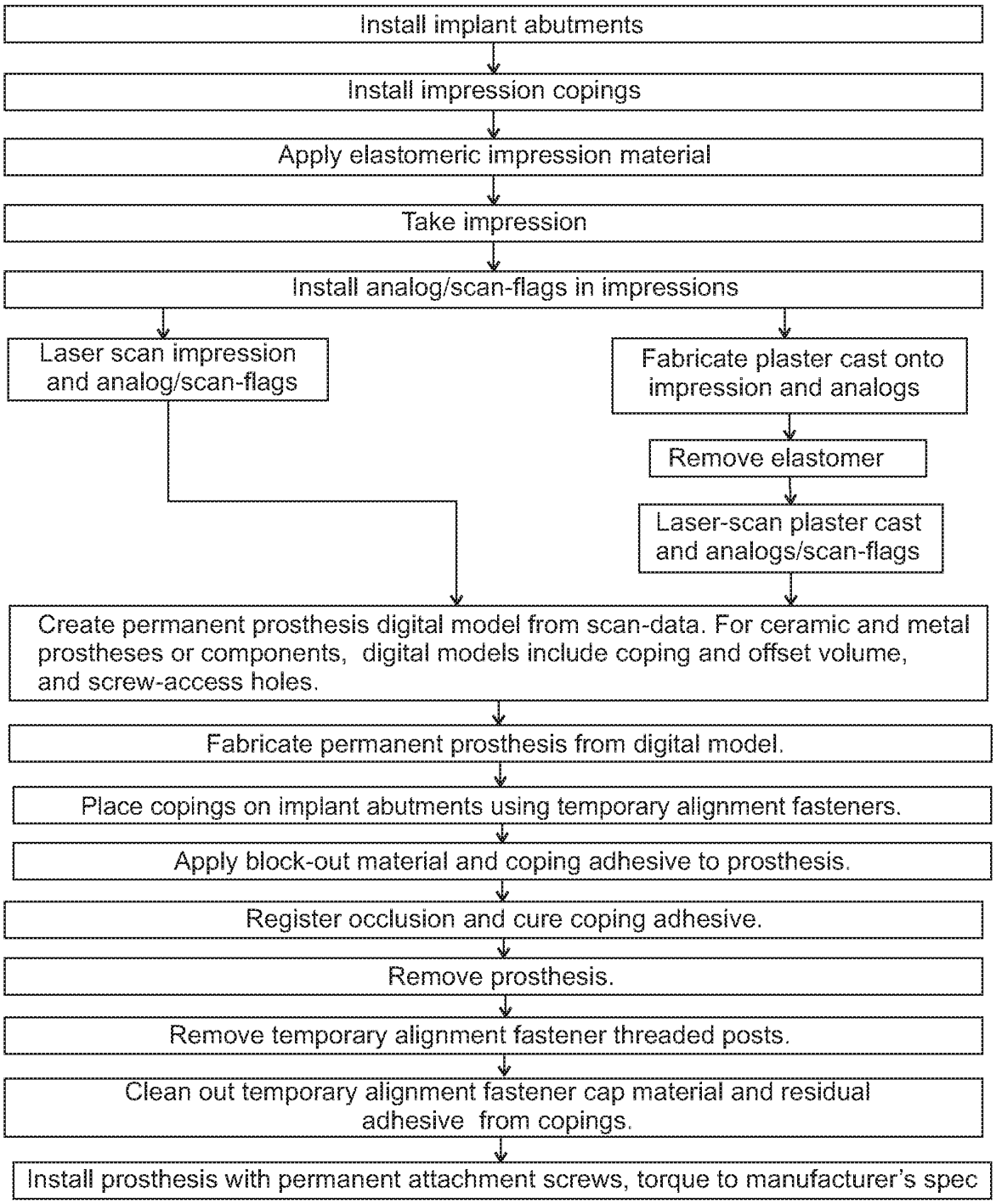
Install implant abutments
Install impression copings
Apply elastomeric impression material
Take impression
Install analog/scan-flags in impressions
Laser scan impression and analog/scan-flags
Fabricate plaster cast onto impression and analogs
Remove elastomer
Laser-scan plaster cast and analogs/scan-flags
Create permanent prosthesis digital model from scan-data. For ceramic and metal prostheses or components, digital models include coping and offset volume, and screw-access holes.
Fabricate permanent prosthesis from digital model.
Place copings on implant abutments using temporary alignment fasteners.
Apply block-out material and coping adhesive to prosthesis.
Register occlusion and cure coping adhesive.
Remove prosthesis.
Remove temporary alignment fastener threaded posts.
Clean out temporary alignment fastener cap material and residual adhesive from copings.
Install prosthesis with permanent attachment screws, torque to manufacturer's spec

FIG. 58

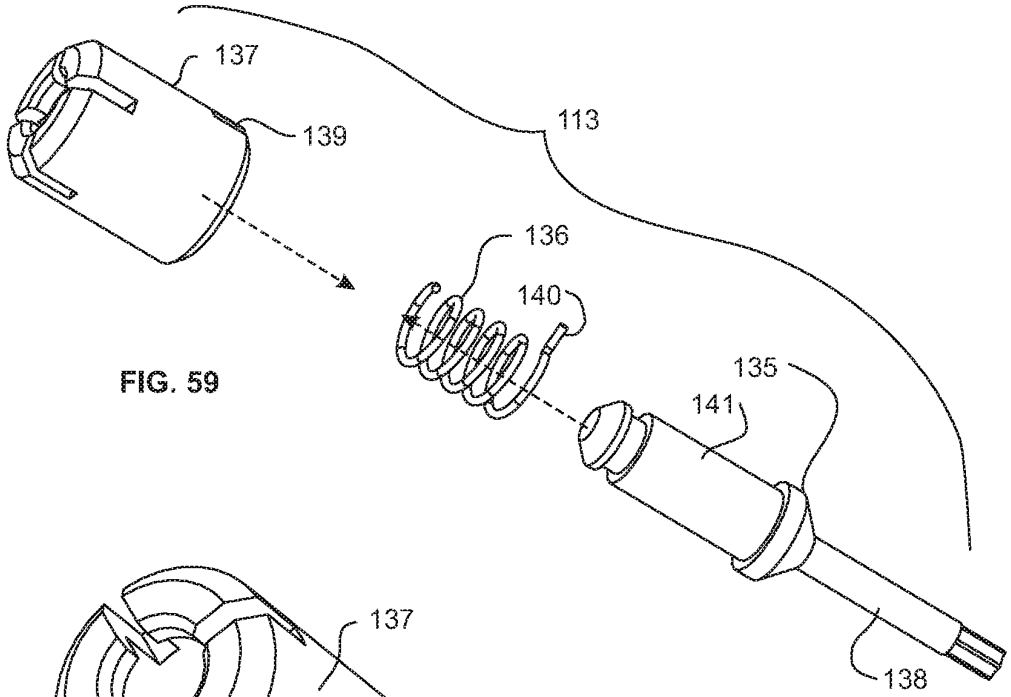


FIG. 59

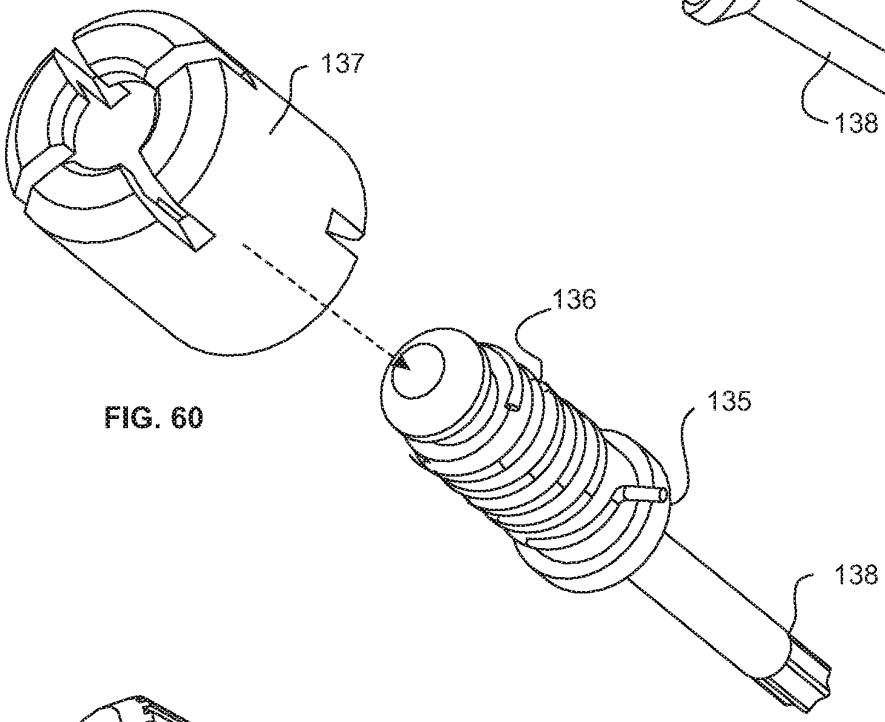


FIG. 60

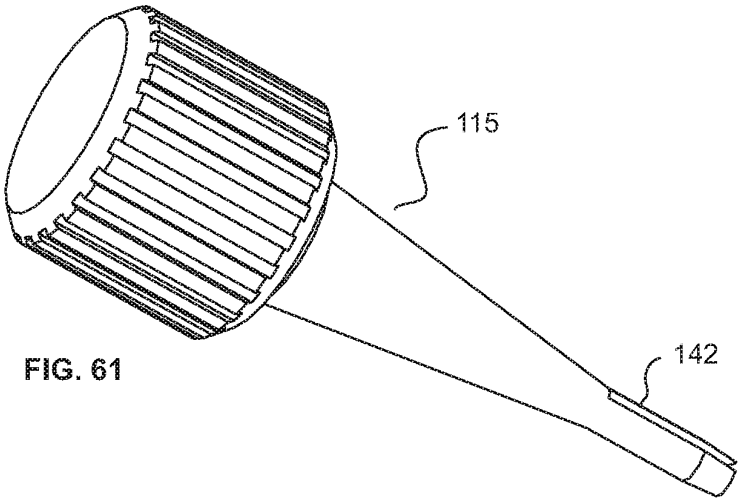


FIG. 61

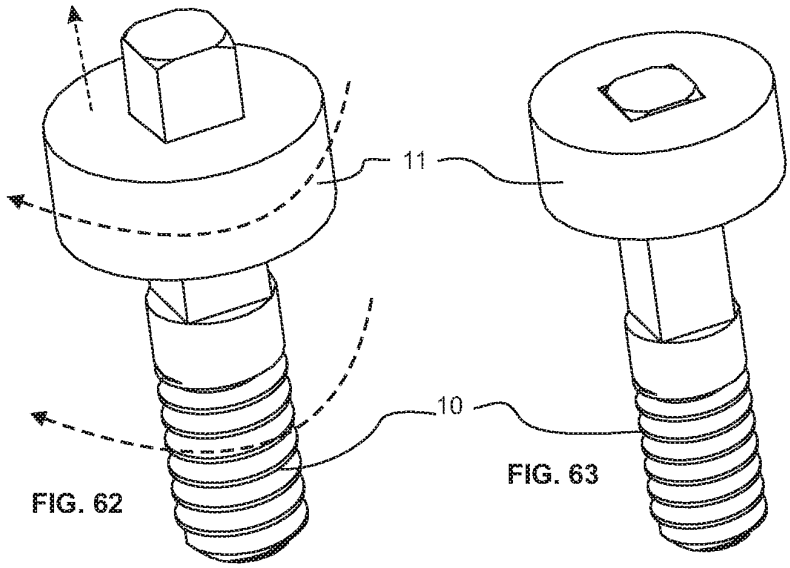


FIG. 62

FIG. 63

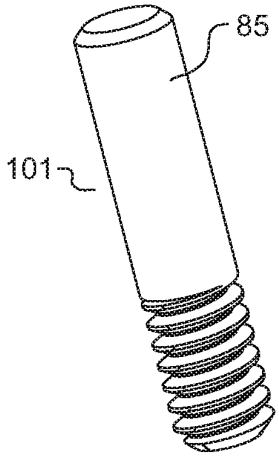


FIG. 64

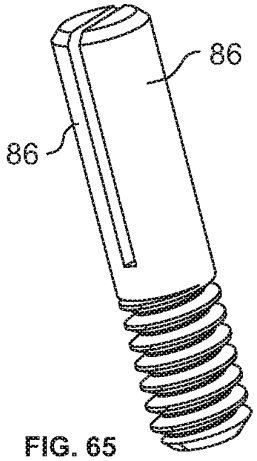


FIG. 65

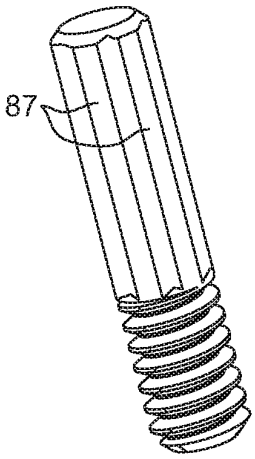


FIG. 66

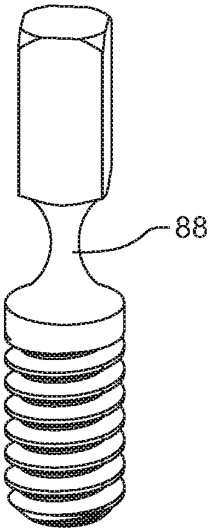


FIG. 67

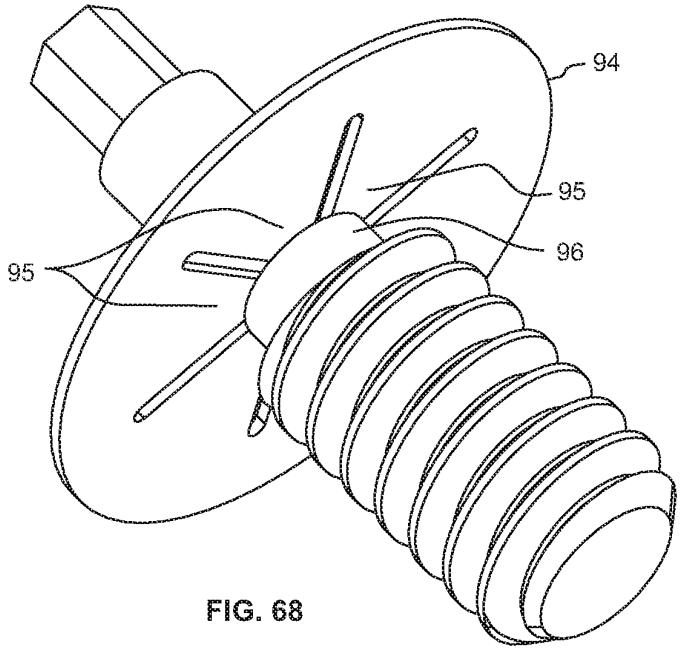


FIG. 68

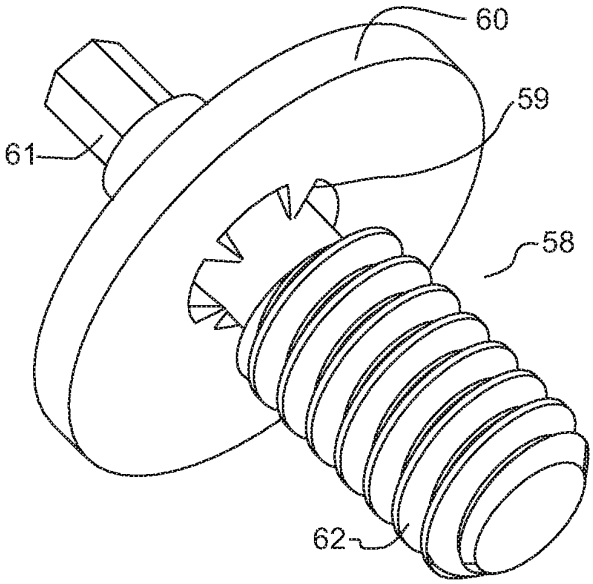


FIG. 69

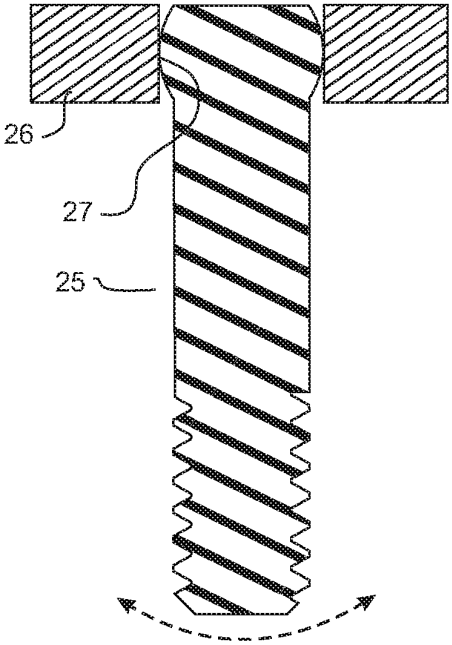


FIG. 70

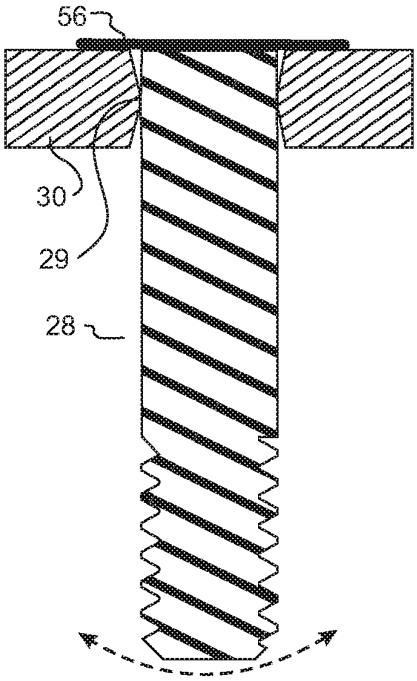


FIG. 71

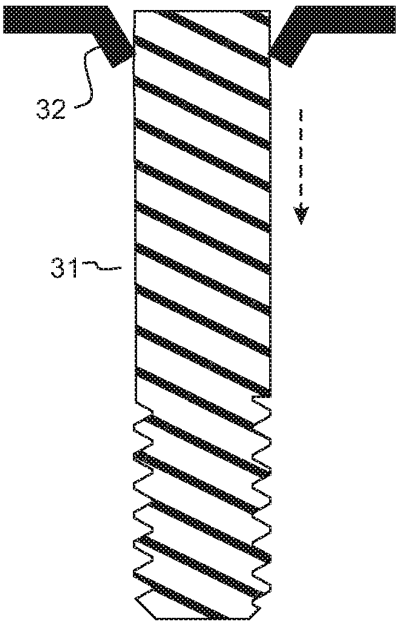


FIG. 72

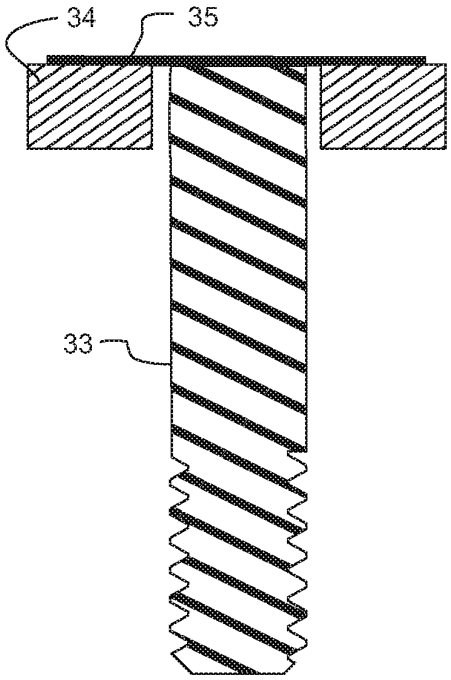


FIG. 73

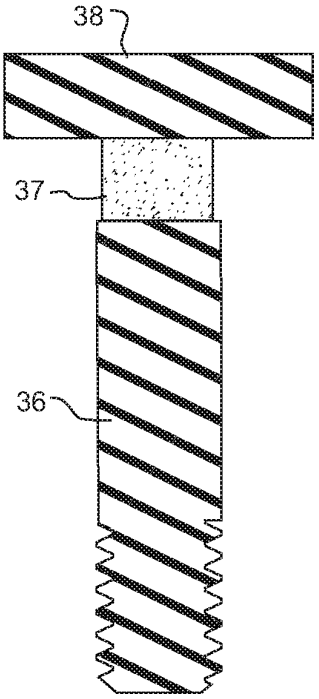


FIG. 74

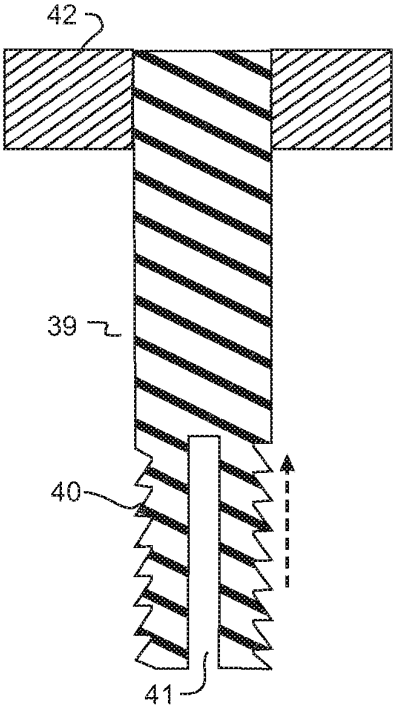


FIG. 75

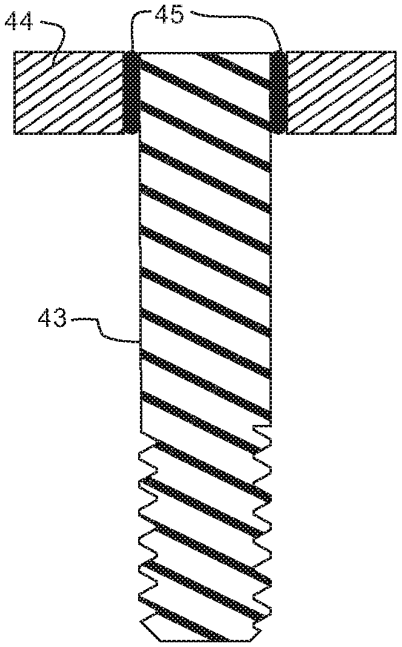


FIG. 76

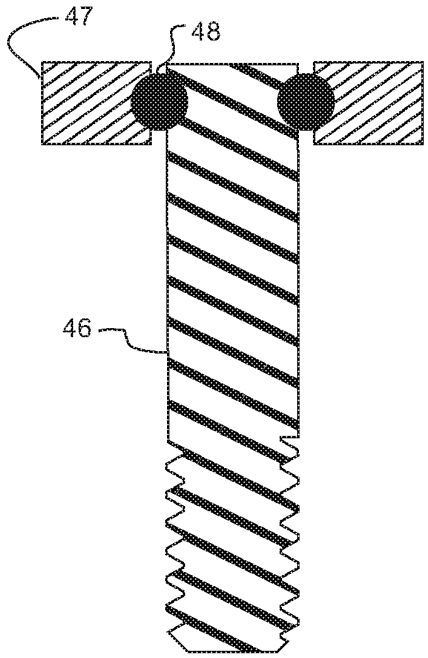


FIG. 77

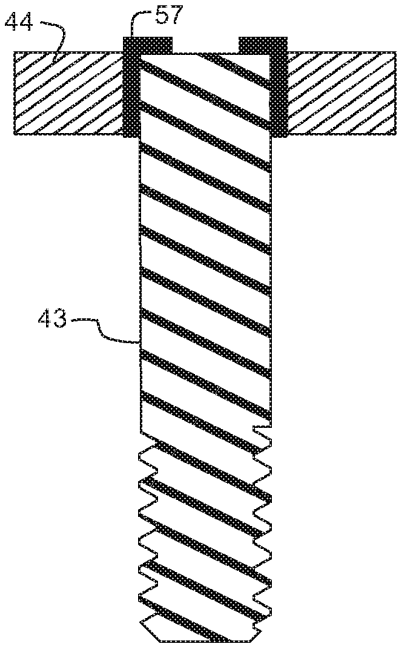


FIG. 78

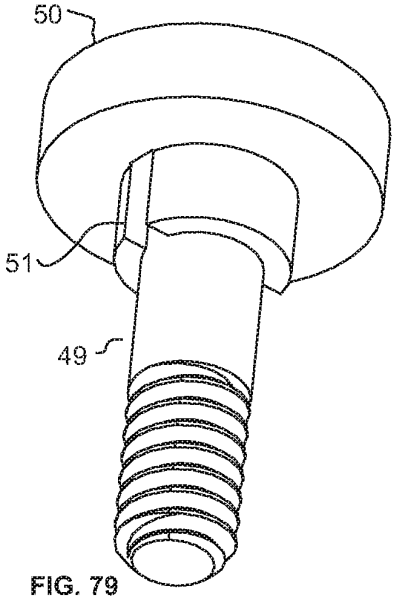


FIG. 79

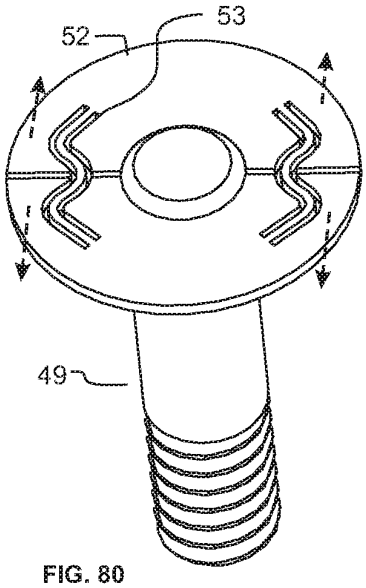


FIG. 80

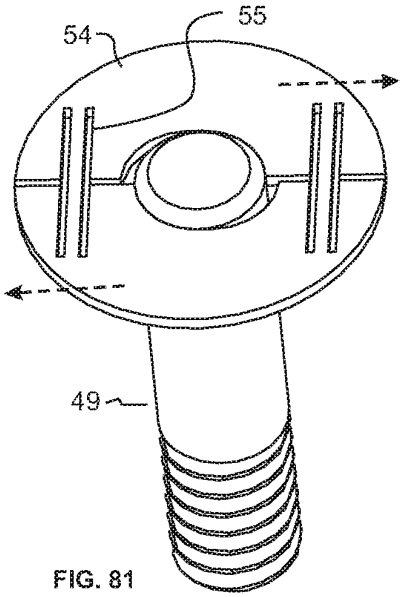


FIG. 81

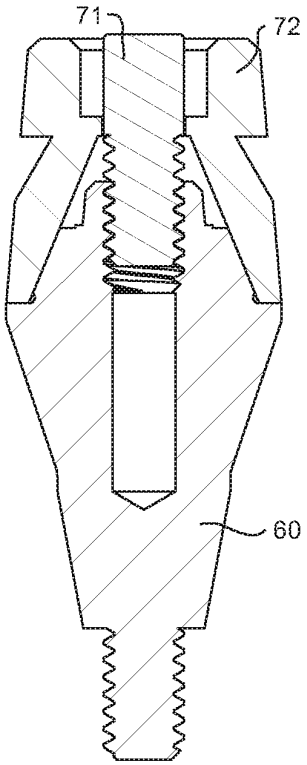


FIG. 82

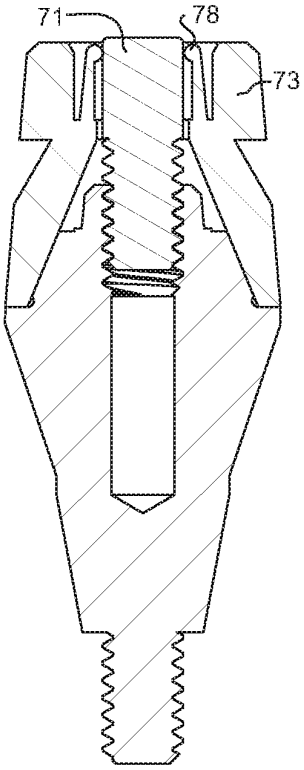


FIG. 83

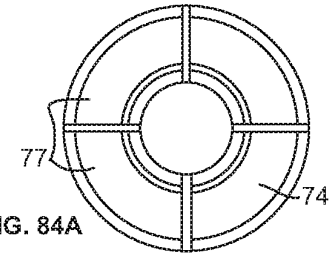


FIG. 84A

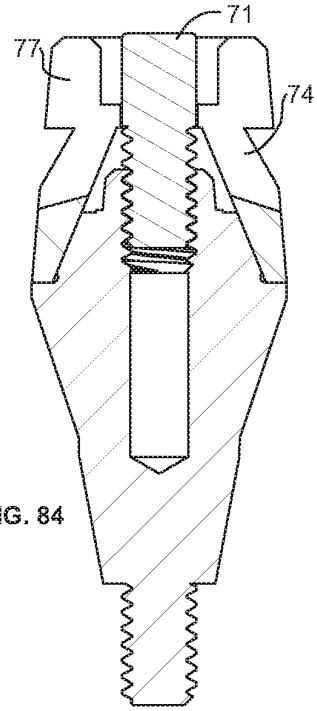


FIG. 84

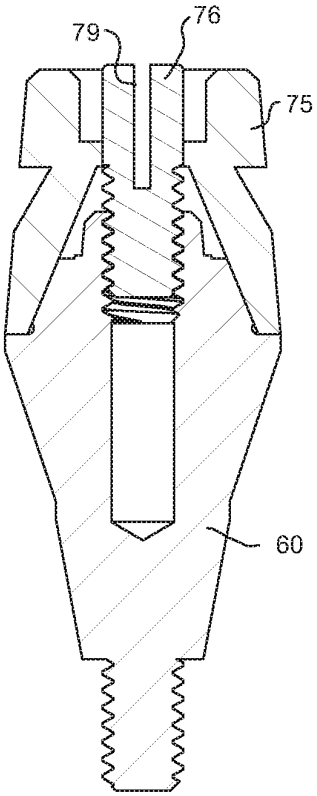


FIG. 85

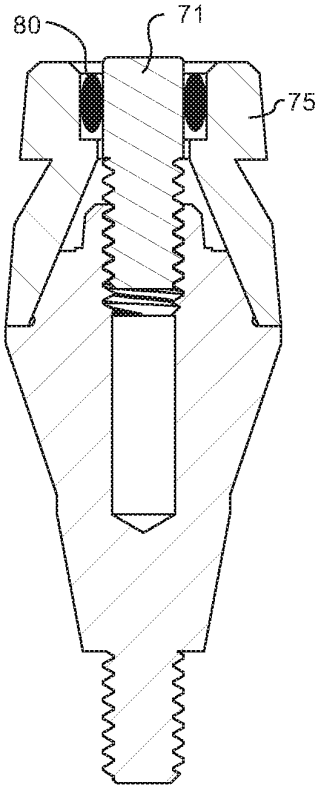


FIG. 86

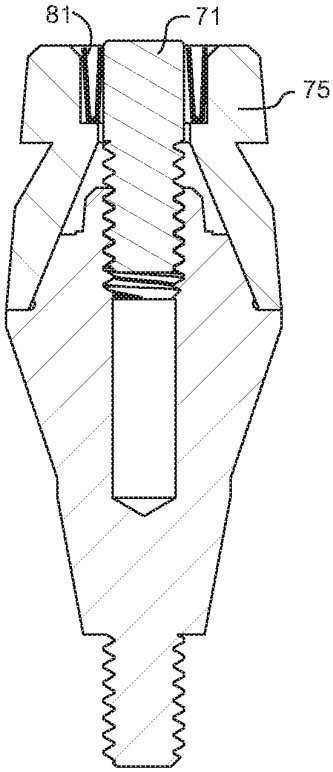


FIG. 87

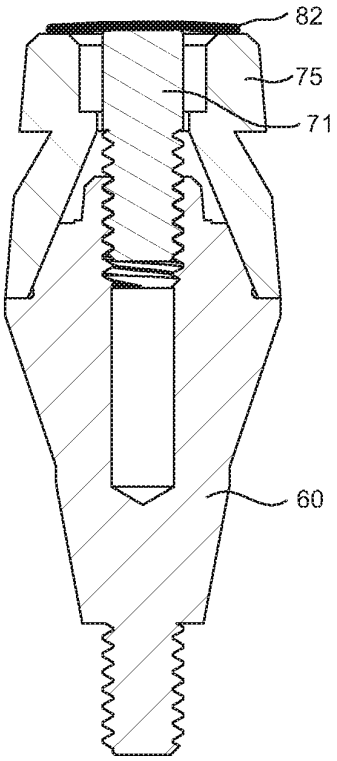


FIG. 88

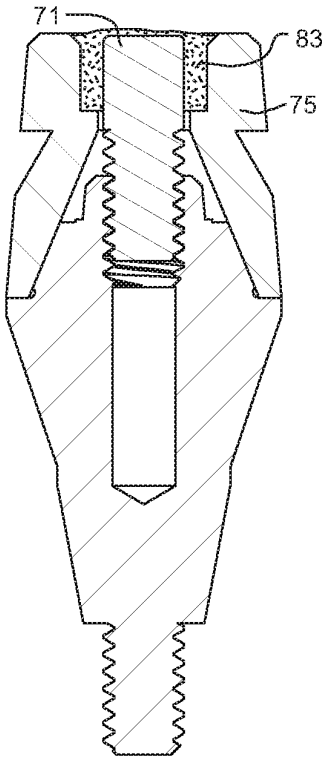


FIG. 89

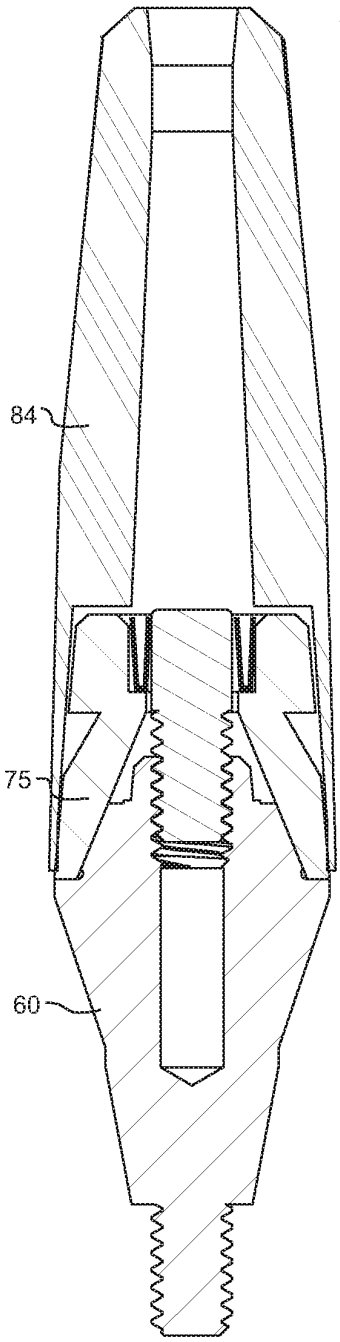


FIG. 90

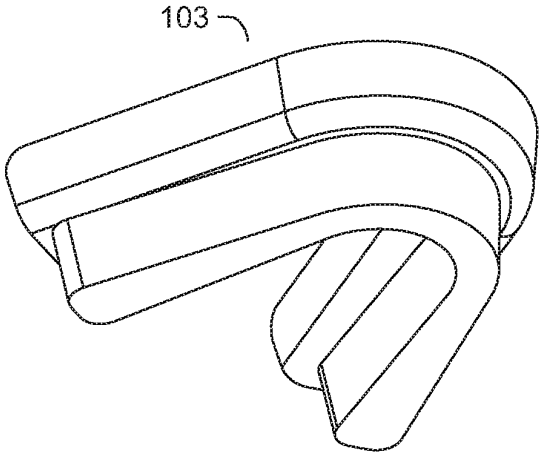


FIG. 91

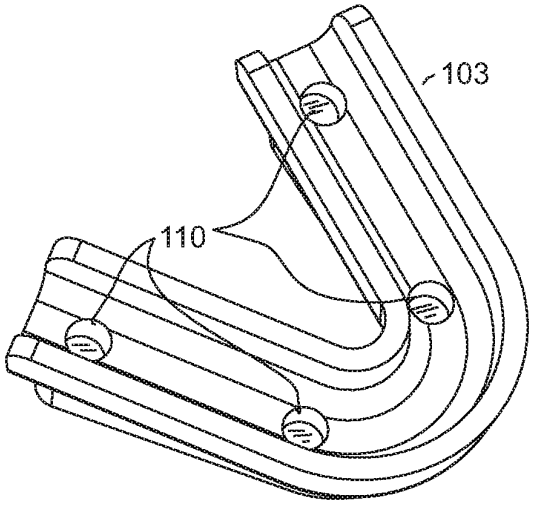


FIG. 92

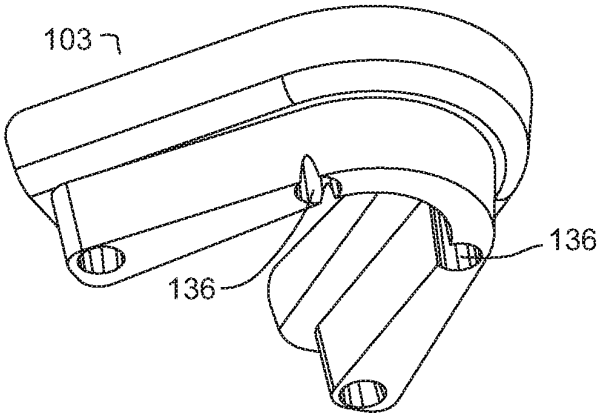


FIG. 93
(PRIOR ART)

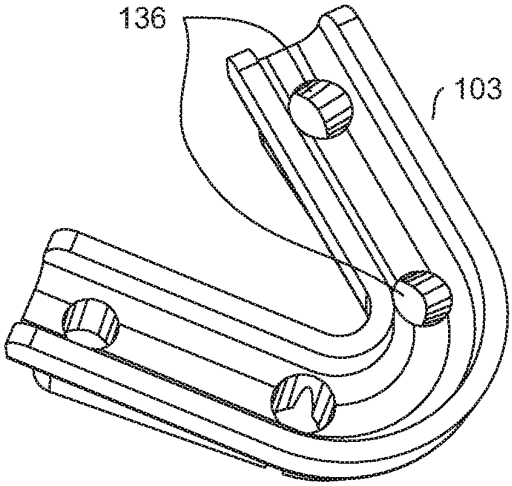


FIG. 94
(PRIOR ART)

Claims

We claim:

1. A system for aligning a dental implant abutment, coping and a separable dental element for definitive screw-attachment comprising:

a temporary alignment fastener comprising:

a post having an axis, a first post end and second post end, wherein the first post end is threaded for screw attachment to the implant abutment;

a cap, wherein the cap is attached to the second post end;

and wherein the temporary alignment fastener is configured to hold the coping against the implant abutment when the first post end is screwed into the implant abutment and wherein the cap is separable from the post through a release force directed away from the first post end.

2. The system of Claim 1 wherein the release force is applied through a pick-up process in which the coping is adhered to the separable dental element.

3. The system of Claim 2 wherein the first end of the post remains attached to the implant abutment after the pick-up process.

4. The system of Claim 1 wherein the cap is attached to the post with at least one of a mechanical interference or adhesive.

5. The system of Claim 1 wherein the release force is less than about 5 pounds.

6. The system of Claim 1 further comprising a coping wherein the coping has an aperture sized to allow the post to extend through the aperture and to allow the cap to hold the coping onto the implant abutment.

7. The system of Claim 1 wherein the cap does not rotate on the post when a torque of less than about 1.6 inch-ounces is applied to the cap.

8. The system of Claim 1 further comprising

at least one coping; and

at least one implant abutment, and

wherein the separable dental element is a prosthesis.

9. The system of Claim 8 further comprising at least one definitive screw.

10. The system of Claim 8 further comprising one or more drills sized to provide clearance in the prosthesis for the definitive screw.

11. The system of Claim 3 wherein the separable dental element is a denture modified for screw-attachment to a plurality of implant abutments.

12. The system of Claim 8 further comprising at least one scan flag.

13. The system of Claim 2 wherein the release force is applied in a direction that is less than 60 degrees from the axis of the post.

14. A system for aligning a dental prosthesis for installation to a threaded implant abutment with a definitive screw having a head and threaded shaft portion comprising:

a coping having a distal end shaped to engage with the implant abutment and a proximal end with an aperture sized to allow the shaft portion of the definitive screw to pass through;

a temporary screw having a distal end portion adapted to engage the threads of the implant abutment and a proximal end portion having temporary engagement means for attachment adjacent to the proximal end of the coping wherein the temporary screw holds the distal end of the coping in alignment against the implant abutment when the distal end portion of the temporary screw engages the implant abutment threads and wherein the temporary engagement means releases the coping without disengaging the post portion of the temporary screw upon the application of a predetermined axial force in the proximal direction.

15. The system of Claim 14 wherein the temporary engagement means includes at least one of a reversible mechanical engagement means and a breakable mechanical engagement means.

16. The system of Claim 15 wherein the reversible mechanical engagement means comprises at least one of frictional interference or elastic deformation.

17. The system of Claim 15 wherein the breakable mechanical engagement means comprises at least one of a structure that fractures at a force below the predetermined axial force, a material that softens with the application of thermal energy, a material that is weakened by the application of electromagnetic energy and an adhesive with a bonding strength below the predetermined axial force.

18. An alignment system for converting an existing denture for screw attachment to threaded implant abutments designed to perform the process of:

mounting pick-up copings to the implant abutments with temporary fasteners,

adhering the copings to cavities formed in the existing denture,

pulling the denture with secured pick-up copings away from the implant abutments,

unscrewing the threaded portions of the temporary fasteners from the implant abutments,

forming definitive screw clearance holes in the denture,

mounting the denture to the implant abutments with definitive screws that engage the same implant abutment threads as the temporary fasteners , wherein the unscrewing the threaded portions of the temporary fasteners and the forming definitive screw clearance holes in the denture may occur in either order.

19. The system of Claim 18 wherein the alignment system is designed to perform the process of:

mounting scan flags to the secured pick-up copings in the converted denture; and

digitally scanning the converted denture and scan flags into prosthesis design software.

20. The system of Claim 18 wherein the alignment system is designed to perform the process of:

mounting laboratory analogs to the secured pick-up copings in the converted denture; and

casting a physical model of the implant abutments and soft tissue using the converted denture and laboratory analogs.

Under the Paperwork Reduction Act of 1995, no persons are required to respond to a collection of information unless it contains a valid OMB control number.

| Application Data Sheet 37 CFR 1.76 | Attorney Docket Number | SDC001 |
|---|---|---|
| | Application Number | |
| Title of Invention | Screw-attached Pick-up Dental Coping System and Methods | |

The application data sheet is part of the provisional or nonprovisional application for which it is being submitted. The following form contains the bibliographic data arranged in a format specified by the United States Patent and Trademark Office as outlined in 37 CFR 1.76.
This document may be completed electronically and submitted to the Office in electronic format using the Electronic Filing System (EFS) or the document may be printed and included in a paper filed application.

## Secrecy Order 37 CFR 5.2:

☐ Portions or all of the application associated with this Application Data Sheet may fall under a Secrecy Order pursuant to 37 CFR 5.2 (Paper filers only. Applications that fall under Secrecy Order may not be filed electronically.)

## Inventor Information:

**Inventor** 1 — Remove

**Legal Name**

| Prefix | Given Name | Middle Name | Family Name | Suffix |
|---|---|---|---|---|
| | Brandon | Dale | Kofford | |

**Residence Information (Select One)** ● US Residency Non US Residency Active US Military Service

| City | Apex | State/Province | NC | Country of Residence i | US |
|---|---|---|---|---|---|

**Mailing Address of Inventor:**

| | | | |
|---|---|---|---|
| Address 1 | P.O. Box 1690 | | |
| Address 2 | | | |
| City | Apex | State/Province | NC |
| Postal Code | 27502 | Country i | US |

**Inventor** 2 — Remove

**Legal Name**

| Prefix | Given Name | Middle Name | Family Name | Suffix |
|---|---|---|---|---|
| | Charles | Albert | Rudisill | |

**Residence Information (Select One)** ◉ US Residency Non US Residency Active US Military Service

| City | Apex | State/Province | NC | Country of Residence i | US |
|---|---|---|---|---|---|

**Mailing Address of Inventor:**

| | | | |
|---|---|---|---|
| Address 1 | 3908 Bamburgh Lane | | |
| Address 2 | | | |
| City | Apex | State/Province | NC |
| Postal Code | 27539 | Country i | US |

All Inventors Must Be Listed - Additional Inventor Information blocks may be generated within this form by selecting the **Add** button. Add

## Correspondence Information:

**Enter either Customer Number or complete the Correspondence Information section below.**
**For further information see 37 CFR 1.33(a).**

Under the Paperwork Reduction Act of 1995, no persons are required to respond to a collection of information unless it contains a valid OMB control number.

| **Application Data Sheet 37 CFR 1.76** | Attorney Docket Number | SDC001 |
|---|---|---|
| | Application Number | |
| Title of Invention | Screw-attached Pick-up Dental Coping System and Methods | |

☐ **An Address is being provided for the correspondence Information of this application.**

| | | | |
|---|---|---|---|
| **Customer Number** | 000112823 | | |
| **Email Address** | dan.whittle@patentleverage.com | Add Email | Remove Email |

## Application Information:

| | | | |
|---|---|---|---|
| **Title of the Invention** | Screw-attached Pick-up Dental Coping System and Methods | | |
| **Attorney Docket Number** | SDC001 | **Small Entity Status Claimed** ☒ | |
| **Application Type** | Nonprovisional | | |
| **Subject Matter** | Utility | | |
| **Total Number of Drawing Sheets (if any)** | 26 | **Suggested Figure for Publication (if any)** | 1 |

## Filing By Reference:

Only complete this section when filing an application by reference under 35 U.S.C. 111(c) and 37 CFR 1.57(a). Do not complete this section if application papers including a specification and any drawings are being filed. Any domestic benefit or foreign priority information must be provided in the appropriate section(s) below (i.e., "Domestic Benefit/National Stage Information" and "Foreign Priority Information").

For the purposes of a filing date under 37 CFR 1.53(b), the description and any drawings of the present application are replaced by this reference to the previously filed application, subject to conditions and requirements of 37 CFR 1.57(a).

| Application number of the previously filed application | Filing date (YYYY-MM-DD) | Intellectual Property Authority or Country |
|---|---|---|
| | | |

## Publication Information:

☐ Request Early Publication (Fee required at time of Request 37 CFR 1.219)

☐ **Request Not to Publish.** I hereby request that the attached application not be published under 35 U.S.C. 122(b) and certify that the invention disclosed in the attached application **has not and will not** be the subject of an application filed in another country, or under a multilateral international agreement, that requires publication at eighteen months after filing.

## Representative Information:

Representative information should be provided for all practitioners having a power of attorney in the application. Providing this information in the Application Data Sheet does not constitute a power of attorney in the application (see 37 CFR 1.32).
Either enter Customer Number or complete the Representative Name section below. If both sections are completed the customer Number will be used for the Representative Information during processing.

| | | | |
|---|---|---|---|
| Please Select One: | ● Customer Number | US Patent Practitioner | ○ Limited Recognition (37 CFR 11.9) |
| Customer Number | 000112823 | | |

Under the Paperwork Reduction Act of 1995, no persons are required to respond to a collection of information unless it contains a valid OMB control number.

| Application Data Sheet 37 CFR 1.76 | Attorney Docket Number | SDC001 |
|---|---|---|
| | Application Number | |
| Title of Invention | Screw-attached Pick-up Dental Coping System and Methods | |

## Domestic Benefit/National Stage Information:

This section allows for the applicant to either claim benefit under 35 U.S.C. 119(e), 120, 121, 365(c), or 386(c) or indicate National Stage entry from a PCT application. Providing benefit claim information in the Application Data Sheet constitutes the specific reference required by 35 U.S.C. 119(e) or 120, and 37 CFR 1.78.
When referring to the current application, please leave the "Application Number" field blank.

| Prior Application Status | Pending | | Remove |
|---|---|---|---|
| Application Number | Continuity Type | Prior Application Number | Filing or 371(c) Date (YYYY-MM-DD) |
| | Claims benefit of provisional | 62818082 | 2019-03-13 |
| Prior Application Status | Pending | | Remove |
| Application Number | Continuity Type | Prior Application Number | Filing or 371(c) Date (YYYY-MM-DD) |
| | Claims benefit of provisional | 62774402 | 2018-12-03 |
| Prior Application Status | Pending | | Remove |
| Application Number | Continuity Type | Prior Application Number | Filing or 371(c) Date (YYYY-MM-DD) |
| | Claims benefit of provisional | 62742942 | 2018-10-09 |

Additional Domestic Benefit/National Stage Data may be generated within this form by selecting the **Add** button. Add

## Foreign Priority Information:

This section allows for the applicant to claim priority to a foreign application. Providing this information in the application data sheet constitutes the claim for priority as required by 35 U.S.C. 119(b) and 37 CFR 1.55. When priority is claimed to a foreign application that is eligible for retrieval under the priority document exchange program (PDX)[i] the information will be used by the Office to automatically attempt retrieval pursuant to 37 CFR 1.55(i)(1) and (2). Under the PDX program, applicant bears the ultimate responsibility for ensuring that a copy of the foreign application is received by the Office from the participating foreign intellectual property office, or a certified copy of the foreign priority application is filed, within the time period specified in 37 CFR 1.55(g)(1).

Remove

| Application Number | Country[i] | Filing Date (YYYY-MM-DD) | Access Code[i] (if applicable) |
|---|---|---|---|
| | | | |

Additional Foreign Priority Data may be generated within this form by selecting the **Add** button. Add

## Statement under 37 CFR 1.55 or 1.78 for AIA (First Inventor to File) Transition Applications

Under the Paperwork Reduction Act of 1995, no persons are required to respond to a collection of information unless it contains a valid OMB control number.

| **Application Data Sheet 37 CFR 1.76** | Attorney Docket Number | SDC001 |
|---|---|---|
| | Application Number | |
| Title of Invention | Screw-attached Pick-up Dental Coping System and Methods | |

☐ This application (1) claims priority to or the benefit of an application filed before March 16, 2013 and (2) also contains, or contained at any time, a claim to a claimed invention that has an effective filing date on or after March 16, 2013.
NOTE: By providing this statement under 37 CFR 1.55 or 1.78, this application, with a filing date on or after March 16, 2013, will be examined under the first inventor to file provisions of the AIA.

| Application Data Sheet 37 CFR 1.76 | Attorney Docket Number | SDC001 |
|---|---|---|
| | Application Number | |
| Title of Invention | Screw-attached Pick-up Dental Coping System and Methods | |

## Authorization or Opt-Out of Authorization to Permit Access:

When this Application Data Sheet is properly signed and filed with the application, applicant has provided written authority to permit a participating foreign intellectual property (IP) office access to the instant application-as-filed (see paragraph A in subsection 1 below) and the European Patent Office (EPO) access to any search results from the instant application (see paragraph B in subsection 1 below).

Should applicant choose not to provide an authorization identified in subsection 1 below, applicant **must opt-out** of the authorization by checking the corresponding box A or B or both in subsection 2 below.

**NOTE**: This section of the Application Data Sheet is **ONLY** reviewed and processed with the **INITIAL** filing of an application. After the initial filing of an application, an Application Data Sheet cannot be used to provide or rescind authorization for access by a foreign IP office(s). Instead, Form PTO/SB/39 or PTO/SB/69 must be used as appropriate.

**1. Authorization to Permit Access by a Foreign Intellectual Property Office(s)**

**A. Priority Document Exchange (PDX)** - Unless box A in subsection 2 (opt-out of authorization) is checked, the undersigned hereby **grants the USPTO authority** to provide the European Patent Office (EPO), the Japan Patent Office (JPO), the Korean Intellectual Property Office (KIPO), the State Intellectual Property Office of the People's Republic of China (SIPO), the World Intellectual Property Organization (WIPO), and any other foreign intellectual property office participating with the USPTO in a bilateral or multilateral priority document exchange agreement in which a foreign application claiming priority to the instant patent application is filed, access to: (1) the instant patent application-as-filed and its related bibliographic data, (2) any foreign or domestic application to which priority or benefit is claimed by the instant application and its related bibliographic data, and (3) the date of filing of this Authorization. See 37 CFR 1.14(h)(1).

**B. Search Results from U.S. Application to EPO** - Unless box B in subsection 2 (opt-out of authorization) is checked, the undersigned hereby **grants the USPTO authority** to provide the EPO access to the bibliographic data and search results from the instant patent application when a European patent application claiming priority to the instant patent application is filed. See 37 CFR 1.14(h)(2).

The applicant is reminded that the EPO's Rule 141(1) EPC (European Patent Convention) requires applicants to submit a copy of search results from the instant application without delay in a European patent application that claims priority to the instant application.

**2. Opt-Out of Authorizations to Permit Access by a Foreign Intellectual Property Office(s)**

☐ A. Applicant **DOES NOT** authorize the USPTO to permit a participating foreign IP office access to the instant application-as-filed. If this box is checked, the USPTO will not be providing a participating foreign IP office with any documents and information identified in subsection 1A above.

☐ B. Applicant **DOES NOT** authorize the USPTO to transmit to the EPO any search results from the instant patent application. If this box is checked, the USPTO will not be providing the EPO with search results from the instant application.

**NOTE:** Once the application has published or is otherwise publicly available, the USPTO may provide access to the application in accordance with 37 CFR 1.14.

Under the Paperwork Reduction Act of 1995, no persons are required to respond to a collection of information unless it contains a valid OMB control number.

| Application Data Sheet 37 CFR 1.76 | Attorney Docket Number | SDC001 |
|---|---|---|
| | Application Number | |
| Title of Invention | Screw-attached Pick-up Dental Coping System and Methods | |

## Applicant Information:

Providing assignment information in this section does not substitute for compliance with any requirement of part 3 of Title 37 of CFR to have an assignment recorded by the Office.

**Applicant** 1 Remove

If the applicant is the inventor (or the remaining joint inventor or inventors under 37 CFR 1.45), this section should not be completed. The information to be provided in this section is the name and address of the legal representative who is the applicant under 37 CFR 1.43; or the name and address of the assignee, person to whom the inventor is under an obligation to assign the invention, or person who otherwise shows sufficient proprietary interest in the matter who is the applicant under 37 CFR 1.46. If the applicant is an applicant under 37 CFR 1.46 (assignee, person to whom the inventor is obligated to assign, or person who otherwise shows sufficient proprietary interest) together with one or more joint inventors, then the joint inventor or inventors who are also the applicant should be identified in this section.

Clear

| Assignee | Legal Representative under 35 U.S.C. 117 | Joint Inventor |
|---|---|---|
| Person to whom the inventor is obligated to assign. | Person who shows sufficient proprietary interest | |

If applicant is the legal representative, indicate the authority to file the patent application, the inventor is:

Name of the Deceased or Legally Incapacitated Inventor:

If the Applicant is an Organization check here. ☐

| Prefix | Given Name | Middle Name | Family Name | Suffix |
|---|---|---|---|---|
| | | | | |

**Mailing Address Information For Applicant:**

| | | | |
|---|---|---|---|
| **Address 1** | | | |
| Address 2 | | | |
| **City** | | **State/Province** | |
| **Country** | | Postal Code | |
| Phone Number | | Fax Number | |
| Email Address | | | |

Additional Applicant Data may be generated within this form by selecting the Add button. Add

## Assignee Information including Non-Applicant Assignee Information:

Providing assignment information in this section does not substitute for compliance with any requirement of part 3 of Title 37 of CFR to have an assignment recorded by the Office.

Under the Paperwork Reduction Act of 1995, no persons are required to respond to a collection of information unless it contains a valid OMB control number.

| **Application Data Sheet 37 CFR 1.76** | Attorney Docket Number | SDC001 |
|---|---|---|
| | Application Number | |
| Title of Invention | Screw-attached Pick-up Dental Coping System and Methods | |

**Assignee** 1

Complete this section if assignee information, including non-applicant assignee information, is desired to be included on the patent application publication. An assignee-applicant identified in the "Applicant Information" section will appear on the patent application publication as an applicant. For an assignee-applicant, complete this section only if identification as an assignee is also desired on the patent application publication.

Remove

If the Assignee or Non-Applicant Assignee is an Organization check here. ☐

| Prefix | **Given Name** | Middle Name | **Family Name** | Suffix |
|---|---|---|---|---|
| | | | | |

**Mailing Address Information For Assignee including Non-Applicant Assignee:**

| | | | |
|---|---|---|---|
| **Address 1** | | | |
| Address 2 | | | |
| **City** | | **State/Province** | |
| **Country** i | | Postal Code | |
| Phone Number | | Fax Number | |
| Email Address | i | | |

Additional Assignee or Non-Applicant Assignee Data may be generated within this form by selecting the Add button. Add

## Signature:

Remove

**NOTE:** This Application Data Sheet must be signed in accordance with 37 CFR 1.33(b). **However, if this Application Data Sheet is submitted with the INITIAL filing of the application and either box A or B is not checked in subsection 2 of the "Authorization or Opt-Out of Authorization to Permit Access" section, then this form must also be signed in accordance with 37 CFR 1.14(c).**

This Application Data Sheet **must** be signed by a patent practitioner if one or more of the applicants is a **juristic entity** (e.g., corporation or association). If the applicant is two or more joint inventors, this form must be signed by a patent practitioner, **all** joint inventors who are the applicant, or one or more joint inventor-applicants who have been given power of attorney (e.g., see USPTO Form PTO/AIA/81) on behalf of **all** joint inventor-applicants.

See 37 CFR 1.4(d) for the manner of making signatures and certifications.

| **Signature** | /Daniel John Whittle, #54,537/ | | | Date (YYYY-MM-DD) | 2019-10-08 |
|---|---|---|---|---|---|
| First Name | Daniel | Last Name | Whittle | Registration Number | 54,537 |

Additional Signature may be generated within this form by selecting the Add button. Add

| **Application Data Sheet 37 CFR 1.76** | Attorney Docket Number | SDC001 |
|---|---|---|
| | Application Number | |
| Title of Invention | Screw-attached Pick-up Dental Coping System and Methods | |

This collection of information is required by 37 CFR 1.76. The information is required to obtain or retain a benefit by the public which is to file (and by the USPTO to process) an application. Confidentiality is governed by 35 U.S.C. 122 and 37 CFR 1.14. This collection is estimated to take 23 minutes to complete, including gathering, preparing, and submitting the completed application data sheet form to the USPTO. Time will vary depending upon the individual case. Any comments on the amount of time you require to complete this form and/or suggestions for reducing this burden, should be sent to the Chief Information Officer, U.S. Patent and Trademark Office, U.S. Department of Commerce, P.O. Box 1450, Alexandria, VA 22313-1450. DO NOT SEND FEES OR COMPLETED FORMS TO THIS ADDRESS. **SEND TO: Commissioner for Patents, P.O. Box 1450, Alexandria, VA 22313-1450.**

# Privacy Act Statement

The Privacy Act of 1974 (P.L. 93-579) requires that you be given certain information in connection with your submission of the attached form related to a patent application or patent. Accordingly, pursuant to the requirements of the Act, please be advised that: (1) the general authority for the collection of this information is 35 U.S.C. 2(b)(2); (2) furnishing of the information solicited is voluntary; and (3) the principal purpose for which the information is used by the U.S. Patent and Trademark Office is to process and/or examine your submission related to a patent application or patent. If you do not furnish the requested information, the U.S. Patent and Trademark Office may not be able to process and/or examine your submission, which may result in termination of proceedings or abandonment of the application or expiration of the patent.

The information provided by you in this form will be subject to the following routine uses:

1 The information on this form will be treated confidentially to the extent allowed under the Freedom of Information Act (5 U.S.C. 552) and the Privacy Act (5 U.S.C. 552a). Records from this system of records may be disclosed to the Department of Justice to determine whether the Freedom of Information Act requires disclosure of these records.

2. A record from this system of records may be disclosed, as a routine use, in the course of presenting evidence to a court, magistrate, or administrative tribunal, including disclosures to opposing counsel in the course of settlement negotiations.

3 A record in this system of records may be disclosed, as a routine use, to a Member of Congress submitting a request involving an individual, to whom the record pertains, when the individual has requested assistance from the Member with respect to the subject matter of the record.

4. A record in this system of records may be disclosed, as a routine use, to a contractor of the Agency having need for the information in order to perform a contract. Recipients of information shall be required to comply with the requirements of the Privacy Act of 1974, as amended, pursuant to 5 U.S.C. 552a(m).

5. A record related to an International Application filed under the Patent Cooperation Treaty in this system of records may be disclosed, as a routine use, to the International Bureau of the World Intellectual Property Organization, pursuant to the Patent CooperationTreaty.

6. A record in this system of records may be disclosed, as a routine use, to another federal agency for purposes of National Security review (35 U.S.C. 181) and for review pursuant to the Atomic Energy Act (42 U.S.C. 218(c)).

7. A record from this system of records may be disclosed, as a routine use, to the Administrator, General Services, or his/her designee, during an inspection of records conducted by GSA as part of that agency's responsibility to recommend improvements in records management practices and programs, under authority of 44 U.S.C. 2904 and 2906. Such disclosure shall be made in accordance with the GSA regulations governing inspection of records for this purpose, and any other relevant (i.e., GSA or Commerce) directive. Such disclosure shall not be used to make determinations about individuals.

8. A record from this system of records may be disclosed, as a routine use, to the public after either publication of the application pursuant to 35 U.S.C. 122(b) or issuance of a patent pursuant to 35 U.S.C. 151. Further, a record may be disclosed, subject to the limitations of 37 CFR 1.14, as a routine use, to the public if the record was filed in an application which became abandoned or in which the proceedings were terminated and which application is referenced by either a published application, an application open to public inspections or an issued patent.

9. A record from this system of records may be disclosed, as a routine use, to a Federal, State, or local law enforcement agency, if the USPTO becomes aware of a violation or potential violation of law or regulation.

PTO/AIA/01 (06-12)
Approved for use through 01/31/2014. OMB 0651-0032
U.S. Patent and Trademark Office; U.S. DEPARTMENT OF COMMERCE
Under the Paperwork Reduction Act of 1995, no persons are required to respond to a collection of information unless it displays a valid OMB control number.

# DECLARATION (37 CFR 1.63) FOR UTILITY OR DESIGN APPLICATION USING AN APPLICATION DATA SHEET (37 CFR 1.76)

| Title of Invention | SCREW-ATTACHED PICK-UP DENTAL COPING SYSTEMS AND METHODS |
|---|---|

As the below named inventor, I hereby declare that:

This declaration is directed to:

- [x] The attached application, or
- [ ] United States application or PCT international application number _____ filed on _____.

The above-identified application was made or authorized to be made by me.

I believe that I am the original inventor or an original joint inventor of a claimed invention in the application.

I hereby acknowledge that any willful false statement made in this declaration is punishable under 18 U.S.C. 1001 by fine or imprisonment of not more than five (5) years, or both.

## WARNING:

Petitioner/applicant is cautioned to avoid submitting personal information in documents filed in a patent application that may contribute to identity theft. Personal information such as social security numbers, bank account numbers, or credit card numbers (other than a check or credit card authorization form PTO-2038 submitted for payment purposes) is never required by the USPTO to support a petition or an application. If this type of personal information is included in documents submitted to the USPTO, petitioners/applicants should consider redacting such personal information from the documents before submitting them to the USPTO. Petitioner/applicant is advised that the record of a patent application is available to the public after publication of the application (unless a non-publication request in compliance with 37 CFR 1.213(a) is made in the application) or issuance of a patent. Furthermore, the record from an abandoned application may also be available to the public if the application is referenced in a published application or an issued patent (see 37 CFR 1.14). Checks and credit card authorization forms PTO-2038 submitted for payment purposes are not retained in the application file and therefore are not publicly available.

LEGAL NAME OF INVENTOR

Inventor: Brandon Dale Kofford Date (Optional): 10-07-2019

Signature: Brandon Kofford

Note: An application data sheet (PTO/SB/14 or equivalent), including naming the entire inventive entity, must accompany this form or must have been previously filed. Use an additional PTO/AIA/01 form for each additional inventor.

This collection of information is required by 35 U.S.C. 115 and 37 CFR 1.63. The information is required to obtain or retain a benefit by the public which is to file (and by the USPTO to process) an application. Confidentiality is governed by 35 U.S.C. 122 and 37 CFR 1.11 and 1.14. This collection is estimated to take 1 minute to complete, including gathering, preparing, and submitting the completed application form to the USPTO. Time will vary depending upon the individual case. Any comments on the amount of time you require to complete this form and/or suggestions for reducing this burden, should be sent to the Chief Information Officer, U.S. Patent and Trademark Office, U.S. Department of Commerce, P.O. Box 1450, Alexandria, VA 22313-1450. DO NOT SEND FEES OR COMPLETED FORMS TO THIS ADDRESS. **SEND TO: Commissioner for Patents, P.O. Box 1450, Alexandria, VA 22313-1450.**

*If you need assistance in completing the form, call 1-800-PTO-9199 and select option 2.*

# Privacy Act Statement

The **Privacy Act of 1974 (P.L. 93-579)** requires that you be given certain information in connection with your submission of the attached form related to a patent application or patent. Accordingly, pursuant to the requirements of the Act, please be advised that: (1) the general authority for the collection of this information is 35 U.S.C. 2(b)(2); (2) furnishing of the information solicited is voluntary; and (3) the principal purpose for which the information is used by the U.S. Patent and Trademark Office is to process and/or examine your submission related to a patent application or patent. If you do not furnish the requested information, the U.S. Patent and Trademark Office may not be able to process and/or examine your submission, which may result in termination of proceedings or abandonment of the application or expiration of the patent.

The information provided by you in this form will be subject to the following routine uses:

1. The information on this form will be treated confidentially to the extent allowed under the Freedom of Information Act (5 U.S.C. 552) and the Privacy Act (5 U.S.C 552a). Records from this system of records may be disclosed to the Department of Justice to determine whether disclosure of these records is required by the Freedom of Information Act.
2. A record from this system of records may be disclosed, as a routine use, in the course of presenting evidence to a court, magistrate, or administrative tribunal, including disclosures to opposing counsel in the course of settlement negotiations.
3. A record in this system of records may be disclosed, as a routine use, to a Member of Congress submitting a request involving an individual, to whom the record pertains, when the individual has requested assistance from the Member with respect to the subject matter of the record.
4. A record in this system of records may be disclosed, as a routine use, to a contractor of the Agency having need for the information in order to perform a contract. Recipients of information shall be required to comply with the requirements of the Privacy Act of 1974, as amended, pursuant to 5 U.S.C. 552a(m).
5. A record related to an International Application filed under the Patent Cooperation Treaty in this system of records may be disclosed, as a routine use, to the International Bureau of the World Intellectual Property Organization, pursuant to the Patent Cooperation Treaty.
6. A record in this system of records may be disclosed, as a routine use, to another federal agency for purposes of National Security review (35 U.S.C. 181) and for review pursuant to the Atomic Energy Act (42 U.S.C. 218(c)).
7. A record from this system of records may be disclosed, as a routine use, to the Administrator, General Services, or his/her designee, during an inspection of records conducted by GSA as part of that agency's responsibility to recommend improvements in records management practices and programs, under authority of 44 U.S.C. 2904 and 2906. Such disclosure shall be made in accordance with the GSA regulations governing inspection of records for this purpose, and any other relevant ( *i.e.*, GSA or Commerce) directive. Such disclosure shall not be used to make determinations about individuals.
8. A record from this system of records may be disclosed, as a routine use, to the public after either publication of the application pursuant to 35 U.S.C. 122(b) or issuance of a patent pursuant to 35 U.S.C. 151. Further, a record may be disclosed, subject to the limitations of 37 CFR 1.14, as a routine use, to the public if the record was filed in an application which became abandoned or in which the proceedings were terminated and which application is referenced by either a published application, an application open to public inspection or an issued patent.
9. A record from this system of records may be disclosed, as a routine use, to a Federal, State, or local law enforcement agency, if the USPTO becomes aware of a violation or potential violation of law or regulation.

Doc Code: PA..
Document Description: Power of Attorney

PTO/AIA/82A (07-13)
Approved for use through 11/30/2014. OMB 0651-0051
U.S. Patent and Trademark Office; U.S. DEPARTMENT OF COMMERCE
Under the Paperwork Reduction Act of 1995, no persons are required to respond to a collection of information unless it displays a valid OMB control number.

# TRANSMITTAL FOR POWER OF ATTORNEY TO ONE OR MORE REGISTERED PRACTITIONERS

NOTE: This form is to be submitted with the Power of Attorney by Applicant form (PTO/AIA/82B) to identify the application to which the Power of Attorney is directed, in accordance with 37 CFR 1.5, unless the application number and filing date are identified in the Power of Attorney by Applicant form. If neither form PTO/AIA/82A nor form PTO/AIA82B identifies the application to which the Power of Attorney is directed, the Power of Attorney will not be recognized in the application.

| | |
|---|---|
| Application Number | |
| Filing Date | 2019-10-08 |
| First Named Inventor | Brandon Dale Kofford |
| Title | SCREW-ATTACHED PICK-UP DENTAL COPING SYSTEMS AND METHODS |
| Art Unit | |
| Examiner Name | |
| Attorney Docket Number | SDC001 |

**SIGNATURE of Applicant or Patent Practitioner**

| | | | |
|---|---|---|---|
| Signature | /Daniel John Whittle, #54,537/ | Date (Optional) | |
| Name | Daniel John Whittle | Registration Number | 54,537 |
| Title (if Applicant is a juristic entity) | | | |
| Applicant Name (if Applicant is a juristic entity) | | | |

**NOTE:** This form must be signed in accordance with 37 CFR 1.33. See 37 CFR 1.4(d) for signature requirements and certifications. If more than one applicant, use multiple forms.

☑ *Total of 2 forms are submitted.

This collection of information is required by 37 CFR 1.131, 1.32, and 1.33. The information is required to obtain or retain a benefit by the public which is to file (and by the USPTO to process) an application. Confidentiality is governed by 35 U.S.C. 122 and 37 CFR 1.11 and 1.14. This collection is estimated to take 3 minutes to complete, including gathering, preparing, and submitting the completed application form to the USPTO. Time will vary depending upon the individual case. Any comments on the amount of time you require to complete this form and/or suggestions for reducing this burden, should be sent to the Chief Information Officer, U.S. Patent and Trademark Office, U.S. Department of Commerce, P.O. Box 1450, Alexandria, VA 22313-1450. DO NOT SEND FEES OR COMPLETED FORMS TO THIS ADDRESS. **SEND TO: Commissioner for Patents, P.O. Box 1450, Alexandria, VA 22313-1450.**

*If you need assistance in completing the form, call 1-800-PTO-9199 and select option 2.*

# SCREW-ATTACHED PICK-UP DENTAL COPING SYSTEMS AND METHODS

## ABSTRACT

A temporary alignment system and method for holding a dental coping to an implant abutment using the same threads in the abutment that are used for definitive attachment are disclosed. The disclosed temporary fasteners initially orient and hold a coping against an abutment with a force along the same axis as the semi-definitive screw. The aligned coping can be picked-up in a closed-tray impression process without unscrewing the temporary fastener. Embodiments include threaded posts that release copings from the abutment through axial forces. Some embodiments include a threaded post with separable cap that is picked-up with the coping. Methods for converting an existing prosthesis for screw attachment to implants in a single visit and digital capture of the converted prosthesis are described.

## CROSS-REFERENCE TO RELATED APPLICATIONS

This disclosure claims priority of US provisional patent application number 62/742,942, filed on October 9, 2018, and US provisional patent application number 62/774,402, filed on December 3, 2018, and US provisional patent application number 62/818,082, filed on March 13, 2019. All of the above provisional applications are incorporated herein by reference in their entirety.

## COPYRIGHT NOTICE

A portion of the disclosure of this patent application contains material that is subject to copyright protection. The copyright owner has no objection to the reproduction by anyone of the patent document or the patent disclosure as it appears in the Patent and Trademark Office patent files or records, but otherwise reserves all copyright rights whatsoever.

## BACKGROUND OF THE INVENTION

Different systems have been introduced for attaching dental prostheses to dental implants to replace one or more natural teeth. In order to simplify future modification or replacement needs, it is desirable to have reversable attachment between the implants and prostheses using mechanical systems as opposed to directly bonding these components together. These systems require features to provide both proper alignment and retention for acceptable use by the patient. Intermediate components such as copings and separable abutments having different lengths or orientations are often employed to provide proper registration between a dental prosthesis, one or more implants embedded in the patient's jawbone, and the soft-tissue and any remaining natural teeth. These intermediate elements may be mutually attached with screws or with ball-and-socket or other forms of snap-on mounts. In the case of a single-tooth crown attachment, the coping and abutment surfaces preferably include features to remove rotational symmetry in the mating of the abutment and coping surfaces.

Rotational locking features may also be included in these single mount systems. When the prosthesis contains multiple copings for attachment to multiple abutments, this rotational fixation is not generally required. For example, 30 degree tapered mating surfaces for multiple interface locations are sufficient to provide complete registration.

It is common to attach a complete upper or lower denture to four or more implants. The multi-unit abutment system interfaces with mating surfaces of the final prosthetic. In some cases, these dentures may be designed or fabricated from scratch following the pulling of undesirable teeth and mounting of implants. In other cases, no teeth are pulled, but it is desirable to convert an existing removable denture to definitive mounting to new implants. In some cases, it is preferable to convert these existing dentures shortly after the implants are placed. This chair-side processing decreases patient discomfort by providing at least temporary dentures more quickly.

Dental impressions are often used to provide information on the location of implants, soft tissue and existing teeth for designing new prostheses or mounting copings in existing dentures for implant attachment conversion. Generally the copings are mounted to implant abutments and an impression is made to provide location information for the prosthesis through the copings. Impression material is introduced and cured around the copings to define their position. In the case of transfer copings, less rigid impression material is used to form a cavity for each coping; the coping remains attached to the abutment and the cured impression is removed. Subsequently, copings are inserted into the impression. In the case of pick-up copings, the coping is directly retained in the impression material after curing. That is, the copings are picked-up when the impression is removed from the mouth. The resulting alignment of pick-up copings is generally superior to transfer copings as a result of the direct transfer of coping location information. Transfer copings introduce an indirect secondary alignment reference since the insertion of the coping into the impression may not accurately duplicate the original position, particularly in insertion depth.

3 Specification

Pick-up copings can be used with either an open tray or a closed tray protocol. For snap-on systems, a closed impression tray pick-up technique may be done. The tray can be closed because there is no need to access the copings in order to disconnect them after the impression material sets. However, it is desirable to ensure that the assembly of snap-on copings can be removed without patient discomfort. The amount of force required to remove the tray or converted prosthesis depends upon the total number of implant abutment/coping sets and their position and mutual alignment. Some snap-on systems provide features to provide different retention levels, but this complicates the installation process. Special tools have been introduced to help separate impression trays or prostheses with snap-on systems, but may still result in patient discomfort. Since snap-on systems are generally physically larger than dental screws, converting an existing denture may require large clearance cavities to be bored into the existing denture before it can be used as an impression tray in a pick-up coping process. These large holes may significantly reduce the mechanical stability of the existing denture. The mechanical precision required of snap-on system elements generally makes them more expensive than screw-attached systems.

The simplicity of screw-attached systems provides some benefits over snap-on systems beyond fabrication cost. The mounting pressure between the coping and abutment is readily controlled through the torque applied to the screw to tighten it. This axial tension control and the self-aligning characteristics of engaged screw threads provides more certainty in the engagement force and relative orientation of the components. Even if a screw breaks, techniques are known for removing the pieces without damage to surrounding components. Screws also have a benefit of independence for removal since each coping can be loosened individually. Tilting the prosthesis after screw removal to disengage one coping cannot cause reengagement of another coping.

A disadvantage with commercially available screw-attachment systems for pick-up copings is the requirement for using an open-tray impression in order to release the coping from the abutment after the impression material sets. By having an opening in the tray or existing denture, impression screws may be used. These impression screws extend through the tray beyond the impression material and can be unscrewed after the material sets. The impression screws use the same abutment threads as the semi-permanent screws used to attach the prosthesis later. As a result, the introduction of alignment uncertainty through a secondary reference may be avoided or minimized. The copings used with the impression screws are often relatively long and require modification for denture conversion. This customization may result in larger clearance holes in dentures and require additional process time by the dental practitioner. The length of the impression screws sticking through the tray can cause patient discomfort and a gag reflex. In the case of denture conversion, clearance for a set of impression screws at different angles may require additional material removal leading to a weakened denture. A schematic representation of the larger through-holes 136 required using conventional denture conversion processes for screw attachment are illustrated in FIGS. 93-94. The impression screws can also prevent the patient from applying bite pressure during the pick-up process to ensure proper registration of the modified denture and opposing teeth.

Prosthetic dentistry has rapidly moved into the realm of digital design and manufacturing. Typically, this requires that a digital model is created from a physical model or impression to allow digital design and manufacturing techniques to produce a physical prosthetic that can be delivered to a patient for restoration of dental and oral structures. When making a dental restoration with implants in this manner, an implant impression coping is often used in the mouth to reference the position of the implant geometry relative to surrounding structures such as gingiva, adjacent teeth, opposing teeth, etc. Once removed from the mouth, an implant analog is attached to the impression coping that was picked-up or transferred. With the lab implant analog attached to the impression coping in the elastomeric impression, dental stone is flowed

into the impression and allowed to harden before separation from the impression with a resultant dental cast. A scan flag is attached to the lab analog on the dental stone model and is scanned in by laser or optical scanning technology. The scan flag is used for design software to reference and replicate the accurate positioning of the virtual implant relative to the adjacent teeth, gingiva and opposing tooth, as well as the timing of the implant and other pertinent implant geometries. Once the virtual implant is accurately brought into the design software, a prosthetic can be designed by following the workflow in the design software. A completed design is post-processed, and a CAD file is used in CAM software to direct either the 3-D printing or milling of the designed prosthesis. The manufactured prosthesis is verified on the physical model in a remote prosthetic manufacturing lab prior to delivery to the dentist or is verified directly on the dental patient if the prosthesis was manufactured in the local dental clinic. It is currently the standard of care to verify the fit, form, and function on a physical model.

Recently, an impression scan flag was introduced to the market for a few major implant systems and the most common multi-unit geometry. This scan flag allows for an impression to be digitized without the creation of a stone model. A digital model is created directly from the elastomeric impression, a prosthesis is designed digitally and processed with CAM software and both a 3-D printed model and 3-D printed or milled prosthesis is finished and tested on the 3-D printed model. The disadvantage of the 3-D printed model for full arch implant prosthetics is the positioning of the implant lab analog within the 3-D printed model introduces a degree of inaccuracy. Additionally, an impression only captures the implant or multi-unit abutment relative to the tissues and requires cumbersome steps to incorporate a provisional prosthesis or wax-up into the design software relative to the scan of the impression.

A properly converted denture provides a valuable source of information of the relative location of the implant and its abutment surfaces, copings and soft tissue and any remaining teeth of the patient. It can be used as a model for digital scanning to produce a duplicate denture if needed in the future or as a starting digital model for manipulation

to improve aesthetics or other characteristics. However, if the mechanical integrity of the converted denture is compromised, the scanned information may not faithfully represent the relative geometry of these elements and result in a poor fit.

Other alignment systems have been proposed which use silicone or melting screw threads to allow closed tray transfer for definitive screw attachment, but the practicality of providing adequate alignment and seating forces with a screw diameter in the range of existing systems or overcoming the lack of disengagement independence required in melting all threads simultaneously without patient discomfort has not been documented. Details on removing any residual material in the abutment threads or in the prosthesis after the pick-up process have not been disclosed. Other hybrid systems that use a snap-on engagement for the pick-up coping during transfer and subsequent screw-attachment have also been proposed, but detailed information on the tradeoffs in precision and associated complexity or size required for equivalent performance to open-tray impression screw techniques have not been disclosed. A general need exists for systems that improve clinical efficiency, implant to prosthesis alignment accuracy, application to a wide range of coping designs and sources and patient comfort over existing systems.

The present disclosure includes system and methods that address one or more of these issues in the prior art.

## BRIEF SUMMARY OF THE INVENTION

Some embodiments of the invention include a screw-in fastener system used to temporarily retain a coping on an abutment during bonding of the coping into a blind hole located in the tissue-side of a removable dental element such as a removable complete denture. The temporary fastener system disclosed has features to allow easy removal of the dental prosthesis from the fastener post after pick-up of the coping into

the dental prosthesis is complete, without the need for special tools or access to the fastener system to unscrew it.

Some embodiments include a temporary fastener with a male-threaded bottom portion that is installed into the screw threads of an abutment, and an axially separable top portion, or cap, that retains the coping onto the abutment. The separable portion allows removal of the coping picked-up in the dental prosthesis without requiring mechanical access to the fastener. The inventive concepts disclosed facilitate easier installation and removal on multiple abutments that may be oriented at different compound angles when compared to the conventional open-tray processes and long impression screws. The temporary fastener may engage the same screw threads of the abutment that are used to definitively attach the prosthesis. In this manner, the coping is held against the abutment for the pick-up process with a force oriented identically to that of the final screw mounting. The retention of the cap on the screw post can be designed to provide a desired force holding the coping to the abutment through the applied torque on the temporary fastener. The cap can be attached to the post through a combination of known mechanical attachment means including but not limited to interference fits, adhesives, snap fits or other elastic and inelastically deforming retention elements. The cap may also be formed as an integral part of the screw post that has portions that fracture as a result of an applied axial force. In addition to applied axial forces, the cap may separate from the post as a result of retention changes resulting from chemical or thermal processes and or the application of electromagnetic energy during or subsequent to the pick-up process.

Other embodiments include a threaded post that has a temporary retention feature that engages the coping without a separable cap. These embodiments engage the abutment threads in mounting the coping, but release the coping after bonding to the prosthesis.

The disclosed systems and methods can be applied to single tooth prostheses with copings and abutments with orientational features or for multiple tooth prostheses using copings and abutments with symmetrical mating surfaces such as 30 degree tapers.

In some embodiments, the temporary fastener is driven into the abutment threads by a tool that engages the post. In other embodiments, the temporary fastener is driven into the abutment threads by a tool that engages the cap. The drive torque can be designed to be sufficient for holding the coping to the abutment accurately, but less than the torque that would result in movement of the cap relative to the post.

In some embodiments, the threaded end of the post portion of the temporary fastener has a deflecting feature that allows the post to engage or disengage the abutment threads through axial motion instead of a rotary screw motion.

One embodiment describes a system for aligning a dental implant abutment, coping and separable dental element for definitive screw-attachment comprising:

a temporary alignment fastener comprising:

a post having an axis, a first post end and second post end, wherein the first post end is threaded for screw attachment to the implant abutment;

a cap, wherein the cap is attached to the second post end;

and wherein the temporary alignment screw is configured to hold the coping against the implant abutment when the first post end is screwed into the implant abutment and wherein the cap is separable from the post through a release force directed away from the first post end.

One embodiment describes a system for aligning a separable dental element for installation to a threaded implant abutment with a definitive screw having a head and threaded shaft portion comprising:

a coping having a distal end shaped to engage with the implant abutment and a proximal end with an aperture sized to allow the shaft portion of the definitive screw to pass through;

a temporary screw having a distal end portion adapted to engage the threads of the implant abutment and a proximal end portion having temporary engagement means for attachment adjacent to the proximal end of the coping wherein the temporary screw holds the distal end of the coping in alignment against the implant abutment when the distal end portion of the temporary screw engages the implant abutment threads and wherein the temporary engagement means releases the coping without disengaging the post portion of the temporary screw upon the application of a predetermined axial force in the proximal direction.

In some embodiments, an existing removable denture is converted to a screw attached denture by milling pockets to allow copings to be bonded in a pick-up process. In this process, the denture acts in an equivalent manner to a closed impression tray. Proper registration can be confirmed by having the patient bite down on the denture during the pick-up process. After coping pick-up, clearance for the definitive screws can be drilled using the coping as a guide. The converted denture can be used with scan flags to provide a 3-dimensional digital capture. Thus a digital model can be used to make a duplicate prosthesis or as the starting point for a new custom prosthesis.

One embodiment describes an alignment system for converting an existing denture for screw attachment to threaded implant abutments designed to perform the process of:

> mounting pick-up copings to the implant abutments with temporary fasteners, adhering the copings to cavities formed in the existing denture,

pulling the denture with secured pick-up copings away from the implant abutments,
unscrewing the threaded portions of the temporary fasteners from the implant abutments,
forming definitive screw clearance holes in the denture,
mounting the denture to the implant abutments with definitive screws that engage the same implant abutment threads as the temporary fasteners, wherein the unscrewing the threaded portions of the temporary fasteners and the forming definitive screw clearance holes in the denture may occur in either order.

For the purposes of this disclosure, a separable dental element is defined to be anything that incorporates one or more dental copings that can be mounted and removed from one or more implant abutments. Different coping designs are known in the dental industry, and the systems and methods disclosed here can be adapted to work with many commercially-available types of copings including pick-up copings, temporary cylinders, inserts and impression copings. Implant abutments are known in the dental industry having compatible interfaces to these copings. Since the mechanical interface is the same, for the purposes of this disclosure, implant abutment is considered a generic term that includes abutment analogs. Description of alignment systems and process methods with copings and implant abutments that are installed in a patient's jaw should be considered to also describe equivalent inventive concepts that may be used with copings and implant abutment analogs in a dental lab. The inventive concepts disclosed herein can be used with different types of separable dental elements. The separable dental element can be any form of impression used in a dental lab to assist in creating and testing dental prostheses. A separable dental element can also be a dental prosthesis fabricated in the dental lab using a physical model made from the impression, a dental prosthesis newly fabricated, or an existing prosthesis being converted for screw attachment. A dental prosthesis is defined to include a single-tooth appliance such as a crown, or any multiple-tooth bridge or denture. These prostheses may incorporate copings to provide a separable interface to

provide orientation with an appropriate abutment attached to a patient's jaw or gingiva. The abutments for use with the inventive concepts disclosed herein include screw threads to mount the prosthesis with copings onto the abutments. While the concepts describe female threads in the abutment mating with male threads on a mounting screw, this is for convenience in disclosure. The inventive concepts could be applied with systems having male threads in the abutment engaging a screw with female threads for mounting the prosthesis. These are considered to be straightforward variations of the inventive concepts.

For the purposes of this disclosure, the abutments may be integral to the implants embedded into the patients jaw or gingiva, or they may be separate units that are attached to the implants. The inventive concepts disclosed apply to both configurations.

For the purposes of this disclosure, an existing denture should be interpreted broadly to include any prosthesis that has been created prior to the use of the innovative systems and methods disclosed. An existing denture may be a loose denture that was worn by the patient prior to the installation of implants were installed, or it may be a new denture that is in the process of first fitting in the patient's mouth.

The systems and methods disclosed herein can be used with prostheses for attachment to both the upper and lower jaw. As a result, portions of the system that are oriented downward for the lower jaw will be oriented upward for the upper jaw and vice versa. For convenience, a disclosure of an embodiment of inventive concepts that is limited to a single jaw orientation, is considered to disclose an embodiment for the opposite jaw orientation. When referring to the perspective of a clinician, proximal portions are nearer to the clinician than distal portions. While a term such as top is the opposite of the term bottom, and proximal is the opposite of distal, their actual relative orientation will be determined by the context of their use. The term tissue-side is used

interchangeably with intaglio to indicate the side of a prosthesis that is opposite the occlusal or cameo surface.

The inventive systems disclosed are beneficially applicable to screw-attached prostheses. Key benefits of screw-attachment are variable tightening torques and reversibility. The terms permanent, semi-permanent, definitive and final when referring to screw-attachment are used interchangeably in this disclosure. A conventional screw that is definitively attached can still be removed by accessing the screw and rotating it in the opposite direction that was used for attachment. For the purposes of screw-attached prostheses for this disclosure, the attachment is semi-permanent, permanent or definitive in the sense that frequent attachment and removal is not anticipated for normal use. In contrast, the temporary screw attachment is applied for a planned process duration or other anticipated interval. Removal of a semi-permanent or definitive screw is generally motivated by a problem or an opportunity for an improvement. Access to the screw to apply a tool for removal may require removal of material covering the screw for aesthetic reasons.

Other terms in the specification and claims of this application should be interpreted using generally accepted, common meanings qualified by any contextual language where they are used. The terms "a" or "an", as used herein, are defined as one or as more than one. The term "plurality", as used herein, is defined as two or as more than two. The term "another", as used herein, is defined as at least a second or more. The terms "including" and/or "having", as used herein, are defined as comprising (i.e., open language). The term "coupled", as used herein, is defined as connected, although not necessarily directly, and not necessarily mechanically. The terms “about” and “essentially” mean ±10 percent. Reference throughout this document to "one embodiment", "certain embodiments", and “an embodiment" or similar terms means that a particular feature, structure, or characteristic described in connection with the

embodiment is included in at least one embodiment of the present invention. Thus, the appearances of such phrases or in various places throughout this specification are not necessarily all referring to the same embodiment. Furthermore, the particular features, structures, or characteristics may be combined in any suitable manner in one or more embodiments without limitation. The term "or" as used herein is to be interpreted as an inclusive or meaning any one or any combination. Therefore, "A, B or C" means any of the following: "A; B; C; A and B; A and C; B and C; A, B and C". An exception to this definition will occur only when a combination of elements, functions, steps or acts are in some way inherently mutually exclusive.

The drawings featured in the figures are for the purpose of illustrating certain convenient embodiments of the present invention and are not to be considered as limitation thereto. The term “means” preceding a present participle of an operation indicates a desired function for which there is one or more embodiments, i.e., one or more methods, devices, or apparatuses for achieving the desired function and that one skilled in the art could select from these or their equivalent in view of the disclosure herein and use of the term “means” is not intended to be limiting. Other objects, features, embodiments and/or advantages of the invention will be apparent from the following specification taken in conjunction with the following drawings.

## BRIEF DESCRIPTION OF THE DRAWINGS

FIG. 1 is a top exploded isometric view of a first embodiment of a system for aligning a dental implant abutment, coping and prosthesis for definitive screw-attachment.

FIG. 2 is a side plan view of a first embodiment of a system for aligning a dental implant abutment, coping and prothesis for definitive screw-attachment.

FIG. 3 is a top plan view of a first embodiment of a system for aligning a dental implant abutment, coping and prosthesis for definitive screw-attachment.

FIG. 4 is a side cross-sectional view of the system for aligning a dental implant abutment, coping and prosthesis for definitive screw-attachment along the line indicated in FIG. 3.

FIG. 5 is a side cross-sectional view of the embodiment of FIG. 4 attached to the jaw and prosthesis prior to the pick-up process.

FIG. 6 is a side cross-sectional view of the embodiment of FIG. 5 after the pick-up process.

FIG. 7 is a side cross-sectional view of the embodiment of FIG. 6 showing a drill bit creating a pilot hole for a definitive screw.

FIG. 8 is a side cross-sectional view of the embodiment of FIG. 7 showing a stepped drill bit creating a clearance for the head and shaft of a definitive screw.

FIG. 9 is side cross-sectional view of the embodiment of FIG. 8 showing the definitive screw holding the prosthesis to the implant.

FIG. 10 is an exploded top isometric view of a second embodiment of a system for aligning a dental implant abutment, coping and prothesis for definitive screw-attachment illustrating a single abutment and a temporary screw with breakaway tool.

FIG. 11 is an exploded side isometric view of the second embodiment of FIG. 10 prior to installation to the implant abutment.

FIG. 12 is an exploded side isometric view of the embodiment of FIG. 10 with the breakaway tool pushed onto the post and the coping placed on the implant abutment.

FIG. 13 is an exploded side isometric view of the embodiment of FIG. 10 schematically showing the tool being rotated to screw the post into the implant abutment.

FIG. 14 is an exploded side isometric view of the embodiment of FIG. 10 schematically showing the tool breaking away from the cap after the coping is secured on the abutment.

FIG. 15 is an exploded side isometric view of the embodiment of FIG. 10 schematically showing the prosthesis being marked for positioning a clearance hole.

15 Specification

FIG. 16 is a side isometric view of the marked prosthesis from FIG. 15.

FIG. 17 is a side isometric view of the marked prosthesis from FIG. 16 with blind clearance hole and boring tool.

FIG. 18 is an exploded side isometric view of the prepared embodiment of FIG. 17 as adhesive is schematically applied to the coping fixed to the abutment with the temporary screw.

FIG. 19 is a side view of the prosthesis in position for curing of the adhesive applied in FIG. 18.

FIG. 20 is a bottom side isometric exploded view of the coping incorporated in FIG. 19 being picked up as the prosthesis is removed from the implant abutment.

FIG. 21 is a top side isometric view schematically showing the post of the temporary screw being unscrewed from the implant abutment.

FIG. 22 is a top side isometric view of the implant abutment prepared for attachment of a prosthesis with a definitive screw.

FIG. 23 is a bottom isometric view of the prosthesis with picked-up coping from FIG. 20 being drilled from the bottom to provide clearance for the threaded shaft of a definitive screw following coping pick-up.

FIG. 24 is a top isometric view of the prosthesis with picked-up coping from FIG. 20 with a drill applied from the top to provide clearance for the definitive screw head.

FIG. 25 is top exploded isometric view of the prepared prosthesis from FIG. 24 with the definitive screw.

FIG. 26 is a top isometric view of the prepared prosthesis from FIG. 24 after attachment to the implant abutment with the definitive screw.

FIG. 27 is a schematic description of a process for aligning dental implant abutments, copings and a prosthesis for definitive screw-attachment.

FIG. 28 is an exploded bottom isometric view of a third embodiment of a system for aligning a dental implant abutment, coping and prosthesis for definitive screw-attachment with tool oriented for assembly.

FIG. 29 is an assembled bottom isometric view of the embodiment of FIG. 28 with temporary screw and coping inserted into tool.

FIG. 30 is a side view of the system of FIG. 29 after assembly with the implant abutment.

FIG. 31 is a cross-sectional view of the assembly of FIG. 30 along C-C.

FIG. 32 is a side view of the assembly of FIG. 28 after the pick-up process showing the removal end of the tool engaging the retained temporary screw post.

FIG. 33 is a cross-sectional of the assembly of FIG. 32 along D-D.

FIG. 34 is an exploded isometric view of another embodiment of a temporary screw of a system for aligning a dental implant abutment, coping and prosthesis for definitive screw-attachment.

FIG. 35 is an isometric view of the temporary screw of FIG. 34 from the screw thread end.

FIG. 36 is an isometric view of the temporary screw of FIG. 34 from the cap end.

FIG. 37 is a bottom isometric view of a jaw with multiple abutments in preparation of marking a prosthesis as part of the process for aligning a dental implant abutment, coping and prosthesis for definitive screw-attachment.

FIG. 38 is a top isometric view of the prosthesis of FIG. 37 showing abutment location markings.

FIG. 39 is a top isometric view of the prosthesis with clearances milled to receive copings for pick-up.

FIG. 40 is a bottom isometric view showing installed copings and the assembly of a coping to an implant abutment with a temporary screw and torque driver.

FIG. 41 is a top isometric view showing adhesive being dispensed in recesses of the prosthesis.

FIG. 42 is a bottom isometric view of the abutments with attached copings in the process of being positioned into the recesses of the prothesis after adhesive is dispensed.

FIG. 43 is a top isometric view of the copings attached to the prosthesis after adhesive curing and pick-up.

FIG. 44 is a bottom isometric view showing the removal of temporary screw posts from the implant abutments after the pick-up process.

FIG. 45 is a top view of a drill in position to create a pilot hole in the prosthesis of FIG. 43.

FIG. 46 is bottom view showing the pilot holes from the process of FIG. 45 extending through the prosthesis to exit on the occlusion side.

FIG. 47 is a bottom isometric view showing a counterbore positioned on the occlusion side of the prosthesis to provide clearance for the definitive screw.

FIG. 48 is a bottom isometric view illustrating a reamer positioned to clean residue from the bore.

FIG. 49 is a bottom isometric view of the prepared prosthesis with definitive mounting screws prior to fastening to the abutments.

FIG. 50 is a top isometric view corresponding to FIG. 49.

FIG. 51 is a top isometric view of an embodiment of a component suitable for use as a scan flag for digital capture and a laboratory analog for physical model creation.

FIG. 52 is a bottom isometric view of the component from FIG. 51.

FIG. 53 is a bottom isometric view showing the component of FIG. 51 positioned for screw attachment to the converted prosthesis of FIG. 49.

FIG. 54 is a top isometric view of FIG. 53.

FIG. 55 is a top isometric view showing the assembly of FIG. 54 mounted on a stand in preparation for scanning.

FIG. 56 is a side view of FIG. 55.

FIG. 57 is an isometric view of the assembly of FIG. 54 with reinforcing bars mounted prior to pouring of dental stone.

FIG. 58 is a schematic flow chart illustrating options for creating and attaching a permanent prosthesis.

FIG. 59 is an exploded isometric view of the torque driver shown in FIG. 40.

FIG. 60 is top isometric view of the torque driver of FIG. 59 partially assembled.

FIG. 61 is a top isometric view of the post removal tool shown in FIG. 44.

FIG. 62 is a top isometric view of an embodiment of a temporary screw similar to FIG. 1 schematically illustrating axial motion of the cap away from the post threads from screwing after the coping contacts the abutment.

FIG. 63 is a top isometric view of the embodiment of FIG. 62 in which the temporary screw post end has become flush with the top of the cap.

FIG. 64 is a top isometric view of a temporary screw post embodiment having a cylindrical stem.

FIG. 65 is a top isometric view of a split temporary screw post embodiment having deflecting sections.

FIG. 66 is an isometric view of a temporary screw post embodiment having symmetric axial splines.

FIG. 67 is an isometric view of a temporary screw post embodiment having a weakened portion facilitating lateral movement during pick-up.

FIG. 68 is a bottom isometric view of a temporary screw embodiment having a spring cap.

FIG. 69 is a bottom isometric view of a one-piece temporary screw embodiment designed to fracture under axial loading.

FIG. 70 is a cross-sectional view of a temporary screw embodiment incorporating a rounded interface between cap and post facilitating pivotal movement as illustrated.

FIG. 71 is a cross-sectional view of a temporary screw embodiment incorporating a restricted interface between cap and post facilitating pivotal movement and protective film.

FIG. 72 is a cross-sectional view of a temporary screw embodiment incorporating a spring cap with preferential axial movement in the pick-up direction.

FIG. 73 is a cross-sectional view of a temporary screw embodiment incorporating a laminar cap fixed to the end of the post.

FIG. 74 is a cross-sectional view of a temporary screw embodiment incorporating a compliant interface between the cap and post.

FIG. 75 is a cross-sectional view of a temporary screw embodiment incorporating a split post that has deflecting sections with screw threads shaped to facilitate axial separation without unscrewing the post threads.

FIG. 76 is a cross-sectional view of a temporary screw embodiment incorporating an interface material between the cap and post.

FIG. 77 is a cross-sectional view of a temporary screw embodiment incorporating an O-ring interface between the cap and post.

FIG. 78 is a cross-sectional view of a temporary screw embodiment incorporating a cup-shaped interface material between the cap and post.

FIG. 79 is a bottom isometric view of a temporary screw embodiment incorporating a split collar cap.

FIG. 80 is a top isometric view of a temporary screw embodiment incorporating a planar spring that flexes when pulled perpendicular to the diameter indicated.

FIG. 81 is a top isometric view of a temporary screw embodiment incorporating a planar spring that flexes when pulled parallel perpendicular to the diameter indicated.

FIG. 82 is a cross-sectional view of an embodiment of a system for aligning a dental implant abutment, coping and prosthesis for semi-permanent screw-attachment in which the coping is held by mechanical interference to the proximal end of the threaded post.

FIG. 83 is a cross-sectional view of an embodiment of a system for aligning a dental implant abutment, coping and prosthesis for semi-permanent screw-attachment in which the coping has spring fingers holding the proximal end of the threaded post.

FIG. 84 is a cross-sectional view of an embodiment of a system for aligning a dental implant abutment, coping and prosthesis for semi-permanent screw-attachment in which the coping has collet-type spring fingers holding the proximal end of the threaded post.

FIG. 84A is a top view of the embodiment of FIG. 84.

FIG. 85 is a cross-sectional view of an embodiment of a system for aligning a dental implant abutment, coping and prosthesis for semi-permanent screw-attachment in which the proximal end of threaded post has a slotted spring section holding the coping.

FIG. 86 is a cross-sectional view of an embodiment of a system for aligning a dental implant abutment, coping and prosthesis for semi-permanent screw-attachment in which a compressed ring holds the coping to the proximal end of the threaded post.

FIG. 87 is a cross-sectional view of an embodiment of a system for aligning a dental implant abutment, coping and prosthesis for semi-permanent screw-attachment in which a compressed ring with a u-shaped cross-section holds the coping to the proximal end of the threaded post.

FIG. 88 is a cross-sectional view of an embodiment of a system for aligning a dental implant abutment, coping and prosthesis for semi-permanent screw-attachment in which a thin cap fixes the coping to the proximal end of the threaded post.

FIG. 89 is a cross-sectional view of an embodiment of a system for aligning a dental implant abutment, coping and prosthesis for semi-permanent screw-attachment in which

a filler material is placed in the bore of the coping at the proximal end of the threaded post.

FIG. 90 is a cross-sectional view of an embodiment of a system for aligning a dental implant abutment, coping and prosthesis for semi-permanent screw-attachment showing a tool engaging features of the coping to screw in the threaded portion of the post.

FIGS. 91-92 are top and bottom isometric views schematically illustrating the material removed from an existing denture necessary with inventive concepts disclosed in preparation for pick-up.

FIGS. 93-94 are top and bottom isometric views schematically illustrating the material removed from an existing denture necessary using prior art impression screw systems.

## DETAILED DESCRIPTION OF THE INVENTION

FIG. 1 shows an exploded view of one embodiment of a temporary alignment system 12 for use in a direct coping pick-up process for screw attachment of a prosthesis. Implant 8 has a distal end which may include attachment feature portion 135 illustrated as a screw thread for direct attachment to the patient's jaw and a proximal end with an abutment shaped to accommodate a coping 9. The abutment includes threaded section 18. The coping has a central bore 16 to accommodate screw fastening and may include ridges 17 or other structures or surface treatments to increase retention to the prosthesis with adhesive. The coping and abutment mating surfaces as shown in FIG. 1 are symmetrical. The inventive concepts of this disclosure may also be applied to abutment and coping systems that are keyed to restrict mating orientation. The coping may be mounted onto the abutment through rotation of a temporary adjustment screw comprising a threaded post 10 and cap 11. The cap 11 is mechanically attached to post 10 in a manner that allows relative axial motion with the application of a predetermined force. As illustrated in FIG. 1, cap 11 has a square central bore 13 that is press-fit onto

a square portion 14 of post 10. The cap 11 temporarily retains coping 9 onto abutment 8 during the pick-up process of the coping into the prosthesis with a force aligned directly along the same axis as the semi-permanent screw that will be used for definitive prosthesis mounting. The portion of the post engaging the abutment threads also prevents any pick-up material from contacting the abutment screw threads. After the coping is picked-up into the prosthesis, the cap and coping may be released from the abutment by applying an axial force. In the embodiment shown, the post threads 15 remain engaged with abutment threads 18 after the pick-up process. The post can then be removed from the abutment by unscrewing it. The prosthesis with embedded coping can be subsequently processed to accommodate semi-permanent screw attachment as will be described later.

FIGS. 2 and 3 show a side and top view of the assembled system of FIG. 1; FIG. 4 shows a cross-sectional view along the axis as indicated. As shown in FIG. 4, matching conical surfaces on the exterior of the abutment 8 and the interior of the coping 9 are engaged. The coping is pulled into alignment by an axial force from the lower surface of the cap 11 pushing against the upper surface of the coping from screwing the threads of post 10 into the implant abutment. The distal end of the abutment may be directly attached to the patient's jaw or attached to a separate implant attached to the jaw. The inventive concepts are not dependent upon the nature of the implant, so the distal end attachment feature 135 is represented schematically.

The capability for relative axial movement between the cap 11 and temporary attachment post 10 allows separation of the temporary attachment post from the cap without tools after retaining the coping onto the abutment during fitting and bonding of the coping into the prosthesis. These parts are accurately aligned during the bonding process since the temporary post engages the abutment threads to provide an axial force holding the coping to the abutment just like the screw used for final attachment.

The cap may be sized to have an amount of press-fit mechanical interference to the temporary attachment post to provide an axial retention force of approximately 20 to 900 grams, this force being sufficient to retain coping 9 during assembly while allowing relatively easy pickup removal of the coping and prosthesis from the temporary attachment post after assembly. The temporary attachment post 10 may include indicators (not shown) in the end by the cap 11 to provide intermediate visual and/or tactile feedback on the depth of threaded engagement of the post during screw attachment of the coping to the abutment.

In this embodiment, screw driving torque is provided by the square cross-section of the cap aperture and temporary attachment post. In the cross-sectional view of FIG. 4, the post 10 has been screwed in so that only a small beveled surface of the post extends above the top of the cap when the post threads bottom out in the abutment. During installation, this optional configuration provides feedback to the dental practitioner when the torque increases as the threads bottom. The square drive tool engagement can also be designed to disengage at a pre-designed minimum extension of the square post above the top of the cap. Alternatively, a tool with a specified maximum torque may be used to ensure engagement of the coping and abutment surfaces.

The screw driving torque function may be accomplished by engaging other features on the temporary attachment post such as hex or spline or asymmetric features. Alternately, the cap may be used to engage a screwdriver or other tool for torqueing. For example, in the case of a cylindrical temporary attachment post top portion, driving torque can be provided by the friction of the press-fit between the cap and temporary attachment post. For example, a medium press-fit of a 3mm diameter 1 mm thick nylon cap onto a 1.3mm diameter stainless steel cylindrical rod may produce approximately 500 grams of axial retention force and 17 gram-cm driving torque. A typical screw thread size for appliances is m1.4 x 0.3. The retention/axial force of the cap to the temporary attachment post may be determined by the degree of press-fit and frictional

properties between the cap and temporary attachment post, and/or spring features incorporated into the temporary attachment post and/or cap.

In actual trial installations, polymer caps of approximately 1.2 mm thickness press fit onto posts of approximately 1.4 diameter with cylindrical axial bores have been sufficient for installation and pick-up removal of a single prosthesis from multiple implant abutments in which the axes of the screw threads in the implant abutments are not mutually parallel.

The separable mechanical attachment means may include any combination of techniques, including frictional forces from interference, adhesives, waxes, chemical bonding, solders, elastically or inelastically deformable spring, snap or interlocking structures, thermally or electromagnetically fusible materials, fracturing structures, etc.

FIG. 5 through FIG. 9 show example cross-sectional views of some of the different stages of installation of the temporary fastener system into a denture. FIG. 5 shows a cross-sectional view of the assembly of the first embodiment during the initial phase of the coping pick-up process. As illustrated, the implant abutment 8 is attached to a schematic implant 70. The implant 70 has an interface 7 (shown schematically) that is attached to the patient's jawbone 22. The coping 9 is held against the implant abutment 8 through the temporary screw comprising the post 10 and cap 11. A blind clearance hole 5 in the prosthesis 3 is sized to accommodate the coping and temporary screw. Pick-up material 71 is positioned in the clearance hole 5 to capture the coping in proper alignment within the prosthesis. After the pick-up material has set up, the prosthesis 3, coping 9 and temporary screw cap 10 assembly is pulled off the patient's jaw as shown by the arrows in FIG. 6. The coping 9 and cap 11 are released from the abutment 8 and post 10, while the threads of the post 10 keep it engaged in the implant abutment 8. The post 10 is subsequently removed to make the abutment threads 18 available for holding the prosthesis in proper alignment with a definitive screw.

The prosthesis/coping assembly must be processed after the pick-up process for screw attachment. A pilot hole is drilled with bit 72 from the bottom side of the assembly. As shown in FIG. 7, the diameter of the bit may be selected to use the interior bores of the coping and cap to act as guides for hand processing. Alternately, a drill guide may be employed that engages a portion of the interior of the coping may be used to align the pilot hole. The pilot hole provides guidance for a tool to provide clearance for the definitive screw shaft and head. FIG. 8 shows a stepped drill that cuts both clearances in a single process. Alternatively, the shaft and head clearance may be drilled with two drills in two process steps. If desired, the cap 11 of the temporary screw can be fabricated of a material that is easier to drill than the coping material to provide feedback on the drill position. It has been found that it is possible to distinguish where the drill is positioned by feel at the interfaces between the pick-up adhesive and the top of the cap (as shown in FIG. 8) and the bottom of the cap and the top of the coping. Since pick-up material was blocked from entering the coping, drilling resistance decreases rapidly upon breaking through the bottom of the cap and entering the interior channel of the coping. Color differences in the materials can also be detected. Alternatively, a tool can be configured to fit within the bore of the coping to limit the depth of the drill.

Once clearance for the definitive screw has been made from the top of the prosthesis, the prosthesis is ready for mounting to the implant with definitive screw 75 as shown in FIG. 9. The screw clearance hole in the prosthesis may be filled with Teflon tape and color-matching composite materials for aesthetic purposes. In the illustrated embodiment, the coping bore has a shoulder to engage a flat surface on the underside of head of the screw. Alternate configurations are possible without deviating from the temporary screw system for coping pick-up disclosed.

FIG. 10 is another exploded isometric view of parts of an embodiment of the invention. In this example, cap 11 is integrated into a breakaway installation tool 18. The tool portion 19 may be used to install the temporary attachment post 10, and then section 19 broken away at mechanically weak separation feature 20, for example, when the post bottoms out in the abutment leaving the cap portion 11 in position. Alternatively, the tool can be designed to increase stress on the separation feature as the top of the post moves axially down relative to the weakened section. As illustrated, after the cap portion 11 breaks away from the tool portion 19, drive feature 21 in the tool portion may be used to remove the post 10 after the pick-up process. One or both ends of the tool may be shaped to subsequently engage and remove the temporary attachment post 10 after installation of coping 9 into the denture.

FIGS. 11-26 provide schematic isometric views of the process steps for using the elements of an exemplary embodiment introduced in FIG. 10 for a single implant system such as a crown. In FIG. 11, a schematic isometric view of a portion of the patient's jaw 22 is shown with an implant 70 (not shown) installed, and abutment 8 installed into the implant. The coping 9 is placed onto the abutment 8, the top portion of temporary attachment post 10 is assembled onto cap 11. The top portion of temporary attachment post 10 and cap 11 are configured such that there is a means to drive the temporary attachment post into the abutment, while allowing axial movement of the cap 11 relative to the temporary attachment post axis, the cap/temporary attachment post interface having sufficient retention force to keep the coping in place on the abutment during subsequent installation steps, and the temporary attachment post being removable after picking up the coping into the prosthesis. Cap 11 may be attached to a break-away installation/removal tool 18.

FIG. 12 shows the coping 9 placed on the abutment 8 and the cap/tool 18 installed onto temporary attachment post 10. The coping-abutment surfaces may comprise a conical or spherical concave feature on the coping 9 that mates with a complementary feature on the top of the abutment 8, as illustrated. Alternatively, keying features may be

employed to restrict relative rotational orientation, particularly in the case of single implants.

FIG. 13 shows the temporary attachment post being threaded into the abutment 8, through a clearance hole in the coping 9. The cap abuts the coping to secure the coping to the abutment. The cap 11 is free to move axially along the temporary attachment post with a frictional retaining force of the cap to the temporary attachment post. A known amount of retention force of the coping to abutment is provided by the design and materials used in the cap and temporary attachment post.

FIG. 14 shows the tool portion of the cap being removed after the cap has broken away; the tool may be used for removal of the temporary attachment post at a later step.

FIG. 15 shows marking of the position of the coping onto the appliance for drilling a recess for the coping in the prosthesis.

FIG. 16 shows the prosthesis with coping drilling location marking 23.

FIG. 17 shows the prosthesis after boring the cavity for the coping; the cavity for the coping may be accurately drilled slightly larger than the coping, without significant unwanted material removal from the prosthesis.

FIG. 18 shows pick-up material being applied to the coping and/or prosthesis after confirmation of freedom to provide proper occlusion during dry testing. Although not illustrated, the cavity of the prosthesis or the coping may optionally include features to provide venting of excess pick-up material if desired.

FIG. 19 shows the bonded coping being picked up into the prosthesis

FIG. 20 shows the prosthesis removed from the temporary attachment post; the temporary attachment post/cap design allows removal of the prosthesis from the temporary attachment post. The coping is now incorporated into the prosthesis.

FIG. 21 shows the temporary attachment post being removed with the tool portion of the cap.

FIG. 22 shows the abutment installed in the implant with the temporary attachment post removed.

FIG. 23 shows drilling a small guide-hole (for example 1-2 mm diameter), through the clearance hole of the coping, into and through the prosthesis. This guide hole provides a small reference hole for enlargement of the hole to accommodate the prosthesis retaining screw.

FIG. 24 shows enlarging the guide hole to a clearance hole for prosthesis retaining screw, approximately the diameter of the head of the retaining screw (e.g. 1.5-2.5mm). The clearance hole would typically be drilled down to the top surface of the coping.

FIG. 25 shows the prosthesis being installed onto the implant abutment by placing the prosthesis coping onto the abutment, and installing the prosthesis retaining screw.

FIG. 26 shows the assembled prosthesis on the implant.

FIG. 27 contains a summary of a generalized process extending the basic process described above for a prosthesis attached to multiple implant abutments.

Another embodiment of a prosthesis and implant alignment system and tool are shown in FIG. 28. In this case, the cap is in the form of a hex nut 63 that is press fit onto alignment post 62 to act as the temporary alignment screw. The drive tool 64 includes a concave hex socket 68 that fits temporary post nut 63, and coping retaining portion 69 that retains coping 61 with a slight interference fit. Thus, as shown in FIG. 29, the temporary screw comprising nut 63 with post 62 is engaged with the socket portion of the tool, and the coping 61 is retained in the tool. The coping is seated onto the abutment 60 by using the hex portion of the driver to rotate the nut and engage the threads 66 on the temporary screw post 62. FIGS. 30 and 31 show an exterior and cross-sectional view of the mounting of the coping on the abutment with the tool. The tool may also have an integrated feature for removing the post as shown in FIG. 32, such as the opposite taper-fit end feature 70 shown in cross-sectional view FIG. 33. FIG. 28 illustrates optional undercut 67 for stronger adhesive locking. Optional anti-rotation flat 65 is shown Such an anti-rotation flat may be used on mating surfaces in circumstances in which there is a preferred orientation around the axis of the screw threads.

Another embodiment of the inventive concepts in which the cap of the temporary screw is shaped to engage the driving tool is shown in FIGS. 34-36. Cap 102 is mechanically attached to alignment post 101 at end portion 101A to form temporary alignment screw 100. This mechanical attachment may result from press-fitting a polymeric cap 102 onto a metal post 101 to provide adequate resistance to rotary slip to temporarily attach the abutment to the implant while still allowing axial movement during the pick-up process. A hexalobular internal (Torx) drive feature is shown in the end of the cap 102,

although other bit socket shapes are possible. As previously discussed, other mechanical engagement means besides an interference fit are possible. The post may be made of different materials than these, or even be of unitary construction with weakened sections that fracture under a desired pick-up axial force.

In a preferred embodiment the post 101 is made from stainless-steel or titanium, and the cap of polymer such as PEEK or acetal. The short length of the post and threaded fastener in this embodiment allows separation at high degrees of angularity of the assembled parts in use. This tolerance for off-axial removal has been found to be particularly advantageous when the prosthesis is to be definitively screw mounted to multiple implant abutments. Testing has verified cap axial release forces of up to about 5 pounds and the application of torque to the cap of about 1.6 inch-ounces without slipping.

The general process for converting an existing removable denture for definitive screw attachment onto four implants with this embodiment is illustrated in FIGS. 37-50. This prosthesis may be, for example, a removable denture that was used prior to implant surgery or a duplicate of such an existing denture as described in US Provisional Patent Application 62/774,402 incorporated herein in its entirety.

FIG. 37 shows a schematic representation of a human jaw portion 106 with implant abutments 107 installed. It does not matter for this discussion if the abutments are separable from the implanted portion of the implant or not. Prosthesis 103 is shown with occlusion side 104 and intaglio side 105. Pickup marking caps 108 are installed onto abutments 107. The location of abutments 105 is marked onto the prosthesis using customary methods by mating the prosthesis with the abutments. FIG. 38 shows the abutment positions 109 marked onto prosthesis 104. FIG. 39 shows boring of blind holes 110 slightly larger than copings 112 in marked locations, with burr tool 111.

FIG. 40 shows the installation of copings 112 onto abutments 107 using separable fastener assembly 100, and torque driver 113 (described in more detail later). The torque driver 113

prevents over-tightening of temporary screw 100 and possible separation of the cap 102 from the post 101 due to rotary motion. The cap 102 and/or post 101A of the separable fastener 100 may be mechanically captured or adhered to the coping 112, or may be designed to loosely fit into the bore of the coping as illustrated with axial force from tightening the separable fastener holding the coping to the abutment 107. The prosthesis is placed over the mounted copings to ensure proper fit.

FIG. 41 shows application of acrylic or other adhesive into cavities 110 of prosthesis 103, which is subsequently fitted onto copings112.

FIG. 42 shows prosthesis 103 being mated with copings 112. After the adhesive sets, the separable fasteners allow easy removal of the prosthesis from the abutments with the copings incorporated into the prosthesis. The angular tolerance for removing the prosthesis from multiple abutments allows applying pick-up forces sequentially around the edge of the prosthesis to work the caps 102 off the posts 101. The caps 102 remain in the prosthesis with the copings 112, while the posts 101 remain in the abutments.

FIG. 43 shows the prosthesis with incorporated copings112 after the pick-up process.

FIG. 44 shows the removal of the threaded post 101 from the implant abutment with removal tool 115. This allows the implant abutment threads to be accessible for subsequent definitive screw attachment.

FIG. 45 shows the drilling of the small pilot hole 117 (e.g. using a drill bit 116 of approximately 1.4 mm diameter), from the intaglio side 105 of the prosthesis out through the occlusion side 104. It has been found that the bore of the coping 112 and the bore of the cap provide adequate guidance for this hole, although a tooling guide could readily be designed to mate with the particular coping used. The pilot hole is drilled completely through the prosthesis to the occlusion side 104 as shown in FIG. 46.

FIG. 47 shows enlarging of the pilot hole 117 to allow clearance for a prosthetic mounting screw 121. The clearance holes 119 are drilled down to the top of the coping using counterbore drill 118. This requires only a small diameter enlargement (for example, approximately 2.4 mm).

FIG. 48 shows a step of a final hand reaming with reamer 120 of the coping bore to clean out any debris or remaining material from the cap that would interfere with the definitive screw.

FIGS. 49 and 50 show the final installation of prosthesis 103 onto abutments 107 using definitive prosthetic screws 121. The screw holes may be subsequently filled to use the modified prosthesis depending upon the anticipated use as a short-term or more permanent prosthesis. This sequence of process steps essentially follows the material provided in FIG. 27.

Note that in the above procedure very little material is removed from the prosthesis during the coping pick-up installation process. The boring process in FIG. 39 need only be sufficient to provide clearance for the coping and temporary screw. Angular variation in the axes of the implant abutments does not appreciably increase the size of the cavity boring required in this closed tray process compared to the additional prosthesis material that must be removed with relatively long impression screws and sleeves in a conventional open tray conversion process for definitive screw attachment. FIGS. 91-92 provide a schematic comparison of the size of the recess borings required using the concepts disclosed compared to the prior art conversion process with larger through holes in FIGS. 93-94.

The converted prosthesis with copings and screw-access channels may also be used as an accurate digital scan model of abutment positioning for creating a new prosthesis. In this embodiment, dual purpose scan flag and lab analogs 122 shown in FIGS. 51-52 may be fastened to the provisional or duplicate prosthesis 103, for example, after the clearance hole cleaning shown in FIG. 48. Features that may be present on the scan-flag/analog include a scan-flag reference portion 123 near the top of the analog, reference scan-flag features such as flats 124, axial and radial retention feature 128, screw attachment 125 for scanning fixture

and/or reinforcement wire attachment. The abutment features 126 are specific to various systems commercially available. The figures show a tapered abutment mating surface 126 and female thread 127.

FIGS. 53-54 show scan flag/analogs 122 attached to converted prosthesis 103 with copings 112 using definitive screws 121.

FIGS. 55-56 show converted prosthesis 103 with scan flags/analogs 122 mounted to fixture 130 by attaching one or more scan flags 122 to the base with adjustable means to orient the prosthesis properly for scanning. For illustration an approximate mounting angle of 45 degrees is shown. In this example, the converted prosthesis 103 is mounted to articulated arm 131 with screw 129 that fits into the threaded hole of scan-flag/analog 122. Base 132 is mounted onto the base of the scanning machine.

The provisional or duplicate prosthesis with attached scan flags/lab analogs is scanned into the design software. This process captures the accurate position of the implant multi-unit abutment relative to the soft tissues and it also captures the tested prosthetic contours to aid in the design of the definitive prosthesis. After the prosthesis has been scanned in, a physical model may optionally be created by creating a soft tissue moulage and pouring dental stone into the provisional or duplicate prosthetic utilizing the scan flags as the laboratory analogs.

FIG. 57 schematically shows the application of solder or brazing preforms 133 to attach reinforcement bars 134 prior to pouring dental stone. Preforms 133 may be inserted into holes in the scan-flag/analogs and heated to attach bars 134. Low-temperature solders, brazing compounds, and hot-melt or other adhesives may be utilized in a preform or dispensed method to increase the rigidity of the analog assembly prior to casting.

This method ensures a fast and efficient means of transferring all pertinent and relevant information from a converted denture required for designing a definitive prosthesis from digital scanning and creating the most accurate and precise physical model that can be mounted in an

articulator with the aid of a bite registration in preparation for post-processing of the machined prosthesis, for example to verify passivity of fit, occlusion, etc.

In addition to the screw attachment of the scan flags to the modified prosthesis, scan flags may be attached to the prosthesis with incorporated copings of FIG. 43 prior to the drilling operations shown in FIGS. 45-47. In this case, another embodiment of the scan flag (not shown) with a post feature equivalent to post feature 101A of separable screw would be inserted into copings 112 of the modified prosthesis and retained by the embedded cap 102. If the separable fastener uses a snap-fit feature to retain the cap to the post, drilling may not be required through the prosthesis to mount the scan flags or lab analogs to the prosthesis or to attach the modified prosthesis to the abutments after lab use. For example, US Provisional Patent Application 62/774,402 describes the use of spring fingers and O-rings for separable fastening of the coping to the abutment for lift-off, and the use of films to prevent adhesive from entering interior portions of the separable fastener. Scan flags and lab analogs may also be engaged with transferred copings using similar mounting features as the post used in the transfer pick-up process. The referenced patent application also includes separable systems in which the post attaches directly to the coping without a cap which may be applied for mounting scan flags or lab analogs as variations of the methods described above. Since the dimensions of the coping and its engagement with the abutment is precisely controlled, having snap-in scan flags engage with a cavity between the top of the coping and the separable cap or an internal groove or other feature of the coping may be desirable.

Variations of using the modified prosthesis as a digital scan model, or using the inventive concepts disclosed to create a permanent prosthesis will be recognized as possible to dental practitioners. For example, instead of using a dual-purpose scan flag and lab analog, single purpose scan flags can be mounted into the provisional prosthesis for scanning, and subsequently replaced with lab analogs prior to casting. In addition to the attachment of scan flags to a modified prosthesis for digitization, the separable fastener may be used to transfer a coping and cap to a new impression after implant surgery. A scan flag or lab analog may be attached and held to the impression with transferred coping for digitization or casting by substituting the new impression for the modified prosthesis in any of the processes above. FIG.

58 describes a work-flow for using the temporary alignment fasteners with a permanent prosthesis fabricated from a digital model based on an impression.

FIGS. 59-60 show an embodiment of a simple torque-driver 113 that can be used for the temporary coping attachment process discussed in reference to FIG. 40. Shaft assembly 135 contains a spring friction cylinder portion 141 and drive portion 138 designed to engage the temporary screw 100. Spring 136 has an interference fit with cylinder 141, and thus when spring 136 is rotated in the “unwind” direction of the spring, a designed amount of slip torque is present between the spring and cylinder. In the “wind” direction, the spring binds on the cylinder. This provides unequal drive torque capability in the two rotation directions. Slot 139 in drive cap 137 engages spring end 140, and snaps onto the end of the shaft assembly, thus when the cap is rotated in the clockwise direction, cylinder and drive slip at a known torque. When the cap is rotated in the counterclockwise direction, the spring binds on the shaft to provide a higher screw removal torque before slipping.

FIG. 61 shows an embodiment of a temporary screw post extractor 115 which may be used to remove post 101 after the pick-up process as shown in FIG. 44. The extractor utilizes a hollow metal tubular split-cylinder end portion 142 that deflects to grip the end of the temporary screw post 101, allowing removal of the separable fastener posts or other types of fasteners. FIG. 61 illustrates a hand-operated knurled end, but other torque tool systems known in the dental industry such as 3/32” friction and latch designs may be used.

FIGS. 62-63 schematically illustrate how the position of the temporary screw post 10 of the first embodiment relative to the implant abutment can be determined. As the temporary screw is rotated clockwise, the cap 11 will be pushed axially away from the screw threads of the post by the coping. The depth of threaded engagement and the length of the temporary screw post 10 and cap can be designed to have the top of the post 10 coincide with the top of the cap 11 as shown in FIG. 63 when the temporary screw is properly positioned. At this point, a drive tool with a square socket cavity (not illustrated) would disengage from the temporary screw assembly since the post 10 would no longer extend into the tool socket cavity.

FIGS. 64-66 illustrate different embodiments of the end of the temporary screw post that engages the cap. FIG. 64 shows a modified version of the cylindrical post 101 designed for frictional engagement on cylindrical portion 85 with a cap having a circular bore similar to that shown in FIG. 34. In FIG. 65, the cylindrical post is slotted, and the resulting beam portions 86 sprung open to provide additional frictional retention of a cap through spring action with the deflecting beams. Various features such as symmetric axial splines 87 (FIG. 66), asymmetric splines or grooves, and textures may also be used to tailor driving torque and axial retention force of the cap to the temporary attachment post. Non-symmetric features may also be utilized to tailor different installation torque and extraction forces. Surface finish and coefficients of friction of the mating materials may also be used to control the driving and retention properties. Temporary attachment posts and caps may be made from metal and polymer materials such as titanium, stainless steels, nylon and PEEK and other non-corrosive biocompatible materials.

If additional off-axis accommodation is desired when extracting the temporary attachment post from the coping after pick-up, some flexibility may be incorporated into the temporary attachment post, such as the necked down portion 88 of the temporary attachment post shown in FIG. 67, which allows the temporary attachment post to flex slightly off-axis during the pick-up process. Under tension, the alignment of the temporary screw axis with this necked-down portion can be designed to align the axis of the implant abutment threads with the coping threads but allow some bending when the tension is released. Note that this alignment flexibility will generally not be required during the final screw attachment process. The final attachment process is more accommodating of axial misalignment of multiple abutments than the coping pick-up process. During pick-up, the prosthesis with copings incorporated must be removed from all abutments simultaneously. For final attachment, each definitive screw is attached individually after the copings of the prosthesis are positioned on the implant abutments.

FIG. 68 shows an embodiment of a temporary screw cap 94 that includes spring features 95 that engage the outer diameter 96 of the temporary post. If desired the portion of the temporary screw cap with the spring features may be made of a different material than the remainder of the cap.

37 Specification

Although the temporary screw of FIG. 69 has a similar appearance to that shown in FIG. 68, it has distinct functionality. FIG. 69 shows an embodiment of a temporary alignment screw 58 having threaded portion 62, breakaway flange 60 and hex drive portion 61. The flange 60 pushes down on the top of the coping as the temporary alignment screw threads 62 are rotated into the implant abutment. The flange portion may be molded onto a temporary attachment post with threaded portion 62 and drive portion 61 by insert molding if different materials are desired. Preferable, all portions of the alignment screw are molded integrally of a single material. The cap and post do not slide axially relative to one another. Instead, small break-away tabs 59 in the flange portion are designed to yield under axial force during the prosthesis and coping assembly removal after the bonding step. The breakaway portions are designed to fracture at an axial force exceeding the force applied to align the coping to the implant abutment for pick-up.

FIG. 67 employed a temporary alignment screw post with a waist that can bend during prosthesis removal in the pick-up process. It is also possible to provide additional off-axis accommodation during coping pick-up with temporary screws that do not bend. For example, in FIG. 70, a temporary alignment screw post 25 includes a rounded portion 27 that bears against the central straight bore of cap 26. FIG.71 shows a tapered profile 29 on cap 30 which engages a straight cylindrical portion of post 28. It is preferable to prevent the incursion of adhesive in the gaps between the post and cap that allow the post to pivot. FIG. 71 includes a thin protective film 56 for this purpose. This film should be chosen to deform easily when the post is pivoted.

FIG. 72 shows a thin retaining ring 32 that engages temporary attachment post 31. The retaining ring 32 also provides a one-way insertion direction of temporary attachment post 31. This preferential insertion direction also corresponds to the relative motion of the post and retaining ring for release in the pick-up process.

FIG. 73 shows another embodiment of a temporary alignment screw that does not have relative axial sliding between the post and cap. In this embodiment a thin retainer 35 that may be

comprised of a metallic or polymer sheet is attached to the top portion of temporary attachment post 33 and optional cap 34. The sheet 35 may be attached to temporary attachment post 33 using adhesives, plastic or metal welding, etc. After the adhesive has cured holding the coping to the implant abutment, the mechanical connection between the post and cap is overcome by axial force in the pick-up process. The mechanical connection can be designed to fail by adhesive failure or by fracture of the joint or the sheet 35.

FIG. 74 shows another embodiment of a temporary alignment screw without relative sliding between the cap portion and the post portion. In this embodiment, a compliant or frangible portion of the post 37 is used to attach a cap 38 to the post. Under tension, the cap portion 38 holds the coping in position against the abutment for pick-up into a prosthesis. Compliant portion 37 may be for example an elastomeric material to provide some angular motion during prosthesis removal after the pick-up material sets. The compliant portion 37 itself or one of its interfaces with the cap or post may provide a separable interface with controlled axial breakaway force. Other methods of separating a compliant portion may include exposure of compliant portion 37 made from a material easily affected by heat, any wavelength of electromagnetic energy, or a chemical reaction that may be applied externally or as part of the pick-up process.

The inventive concepts disclosed are not meant to be restricted to a temporary attachment post with standard screw threads that both engage and disengage the threads in the implant abutment through rotations. For example, alternate separable temporary attachment posts embodiments are possible providing features that allow the post to removably hold the coping to the abutment by other means than a separable cap. For example, as shown in FIG. 75 an alignment fastener 39 may contain a separable threaded or serrated portion 40 that engages the screw threads in the abutment for pick-up, but that will release with axial force after. FIG. 75 shows a temporary attachment post 39 having a slot 41 and asymmetric threads or serrations 40 that allow the temporary attachment post to be inserted through rotation for alignment for coping pick-up but may be subsequently extracted with a separation force in the axial direction. Although the threads could be designed to provide engagement with the implant abutment threads through axial motion in the opposite direction to the arrow shown in FIG. 75, rotation to a design torque on engagement is generally preferred. If the post 39 is designed to

be pulled out of the abutment during the coping pick-up process, it will subsequently need to be removed from flange 42 and the prosthesis assembly. Since there is no processing impact on patient comfort, higher mechanical forces or a broader range of energy or chemical processing may be employed to remove the post from the prosthesis after coping pick-up.

Further permutations of the separable alignment screw features disclosed above are possible. FIG. 76 shows an embodiment where axial flexibility and/or controlled retention between cap 44 and temporary attachment post 43 is provided by an interface material 45 such as adhesives, silicones, and elastomeric materials contained in the space between the bore of the cap 44 and the post 43. FIG. 77 shows cap 47 retained with an O-ring 48 held in grooves in the cap 47 and temporary attachment post 46. FIG. 78 shows a cup-shaped interface material located within the bore of the cap 44 and extending over a portion of the end of the post 43. FIG. 79 shows a split-collar feature 51 on cap 50 which presses onto the temporary attachment post 49. FIGS. 80 and 81 show alternate designs of flexure beam features in caps gripping a post. In FIG. 80, the pressure on the post 49 is reduced by pulling the cap 52 perpendicular to a diagonal of the cap as indicated by the arrows. In FIG. 81, the pressure on the post 49 is reduced by pulling in opposite directions with moment arms as shown to open the spring.

It is understood that the concept of the temporary attachment of the coping with the abutment with an axially separable temporary post is not dependent upon having a separate cap 11 or nut 63 on the post. If desired the cap or nut can be eliminated and the coping may be directly fixed and axially separable from the temporary attachment post. That is, the coping can be designed to have an equivalent mechanical interface to the post as the caps in the embodiments above. The mechanical interface between the coping and post may be tailored to provide equivalent rotational engagement and relative axial movement above a designed minimum axial force.

Example embodiments of the coping and post being the separable components include the following:

FIG. 82 shows temporary attachment post 71, engaging an interference fit of coping 72 at a position above the threaded portion. Metal, metal-reinforced, ceramic, and polymer copings,

posts and fasteners may be included in this and other embodiments. Any of the parts may have surface treatments to control friction or adhesion.

FIG. 83 shows temporary attachment post 71 engaging integral spring-finger features 78 of coping 73.

FIG. 84 shows a temporary attachment post 71 engaging collet-type spring fingers 77 of coping 74, these collet-type features may be formed using slots in the coping 74 as shown in FIG. 84A.

FIG. 85 shows a slotted spring feature 79 formed in the temporary attachment post 76. The spring-features engage a smaller bore portion 90 of the coping 75. Such features may be of varied shapes including slots, eyelets, swaged portions, tubular swaged parts, etc. A film 56 (not shown) may be used to prevent the ingress of pick-up material into any voids at the top of the post/coping assembly similar to that shown in FIG. 71.

FIG. 86 shows temporary attachment post 71 and coping 75 engaged using an O-ring or washer 80. Such washers may be elastomers, polymers, metals, etc. and may be forms in varied shapes, such as the u-shaped retainer 81 of FIG. 87.

FIG. 88 shows temporary attachment post 71 retained to coping 75 using a sheet cap 82. Sheet cap 82 may be a tape, or other polymers or metals joined using adhesives, thermal and ultrasonic bonding, welding, and brazing, etc. This is similar to the embodiment shown in FIG. 73, except the sheet cap 82 does not have thicker cap element 34.

FIG. 89 shows temporary attachment post 71 retained using a filler material 83 in the counterbore of coping 75. Fillers may include a variety of polymer adhesives or fillers, such as silicones, acrylics, epoxies, and/or soft metallic materials. Since the coping 75 in this embodiment is fixed to the post 71, the mating surfaces of the coping 75 and implant abutment must allow relative rotational motion until the predetermined torque is achieved.

Installation of these embodiments may also be accomplished with simple polymer or metal tools 84, for example, as shown in FIG. 90 that engage the flats or other features of the coping 75, and/or of features on top of the threaded post 71.

Although the descriptions above use rotational engagement of the bottom of the post with internal threads of the abutment as a preferred approach, this is not meant to be limiting. Alternate approaches for engaging a temporary attachment post with abutment threads through axial insertion without rotation are considered to be part of this disclosure. For example, the split post bottom structure shown in FIG. 75 which allows axial extraction can also be used for axial insertion. Similarly, an interference fit between the bottom of the post with the threads may also be designed to provide sufficient engagement to provide adequate alignment and fixing of the coping for the pick-up bonding process described earlier. For non-rotary extraction of the post, it is not necessary to have the extraction force of the post-abutment thread interface greater than the force required for relative movement of the coping or cap with the upper end of the post. That is, if the temporary attachment post remains fixed to the coping during the pick-up step, the post can be removed from the dental appliance after removal from the patient's mouth.

Although axially symmetric interfaces between coping and abutment have been described for most embodiments, the inventive concepts may also be applied to asymmetric abutments and copings as long as the coping doesn't need to rotate on the implant abutment as noted, for example, with the embodiment of FIG. 89 .

Various embodiments have been described to illustrate the disclosed inventive concepts, not to limit the invention. Combining inventive elements of one or more of the embodiments with known materials, components and techniques in dental science to create further embodiments using the inventive concepts is considered to be part of this disclosure.

42 Specification

Any of the embodiments may contain a film or deposited material on top of the cap and temporary attachment post to prevent adhesion to the temporary attachment post of materials used for pick-up, as shown in the film 56 of FIG. 71.

Temporary attachment posts may be rotationally driven into the abutment threads using either the cap, coping or the temporary attachment post itself. Temporary attachment posts and caps may have varied drive features such as male or female knurls, hex, spines, spanner notches/holes. These design alternatives are driven by functional requirements of a particular implementation.

Other means of attaching/joining a secondary separable portion include insert-molding, use of adhesives, waxes, solders or other metallic materials, heat-staking, and ultrasonic bonding.

Break-away portions may also be formed by two-shot molding, dispensing or otherwise placing a secondary mechanically, thermally, or electromagnetically fusible material on a portion of the fastener to provide the break-away function.

Thin-film or thick-film metallic and polymer coatings may be applied to portions of the fastener to tailor friction and insertion and extraction forces, enhance adhesion of pick-up materials, and other properties such as corrosion-resistance.