US009362766B2

(12) **United States Patent**
Workman et al.

(10) **Patent No.: US 9,362,766 B2**
(45) **Date of Patent: *Jun. 7, 2016**

(54) **RECONFIGURABLE ENERGY STORAGE AND POWER SUPPLY DEVICE**

(71) Applicant: **Goal Zero LLC**, Bluffdale, UT (US)

(72) Inventors: **Robert E. Workman**, Morgan, UT (US); **Norman L. Krantz**, Draper, UT (US); **Erik R. Workman**, Salt Lake City, UT (US); **Joseph R. Atkin**, Highland, UT (US); **Walker Ford**, Bluffdale, UT (US)

(73) Assignee: **GOAL ZERO LLC**, Bluffdale, UT (US)

(*) Notice: Subject to any disclaimer, the term of this patent is extended or adjusted under 35 U.S.C. 154(b) by 0 days.

This patent is subject to a terminal disclaimer.

(21) Appl. No.: **14/806,456**

(22) Filed: **Jul. 22, 2015**

(65) **Prior Publication Data**

US 2016/0028260 A1 Jan. 28, 2016

Related U.S. Application Data

(63) Continuation of application No. 13/719,097, filed on Dec. 18, 2012.

(60) Provisional application No. 61/584,005, filed on Jan. 6, 2012, provisional application No. 61/707,711, filed on Sep. 28, 2012.

(51) **Int. Cl.**

H02J 7/00	(2006.01)
H01R 31/06	(2006.01)
H01R 24/38	(2011.01)

(52) **U.S. Cl.**

CPC ***H02J 7/0042*** (2013.01); ***H01R 31/06*** (2013.01); ***H01R 31/065*** (2013.01); ***H02J 7/0052*** (2013.01); *H01R 24/38* (2013.01); *H02J 7/0045* (2013.01); *H02J 2007/0062* (2013.01)

(58) **Field of Classification Search**

CPC H02J 7/0042
USPC 439/170, 21; 320/120
See application file for complete search history.

(56) **References Cited**

U.S. PATENT DOCUMENTS

D45,257	S	2/1914	Hasburg
D60,285	S	1/1922	Appleton

(Continued)

FOREIGN PATENT DOCUMENTS

WO	WO-2011/025933	9/2011
WO	WO-2011/106431 A2	9/2011

OTHER PUBLICATIONS

U.S. Appl. No. 14/326,258, filed Jul. 8, 2014, Goal Zero LLC.

(Continued)

Primary Examiner — Yalkew Fantu
(74) *Attorney, Agent, or Firm* — Foley & Lardner LLP

(57) **ABSTRACT**

A charging device includes a body having a rechargeable energy storage device and a housing, an interface pivotally coupled to the housing, the interface including a first conductor and a second conductor and configured to transmit power between the rechargeable energy storage device and a device connected to the interface, a first rigid post, a first pin, a first compressible element positioned to press the first pin against the first rigid post, a second rigid post, a second pin, and a second compressible element positioned to press the second pin against the second rigid post. The interface is configured to pivot about an axis defined by the first pin and the second pin.

21 Claims, 27 Drawing Sheets

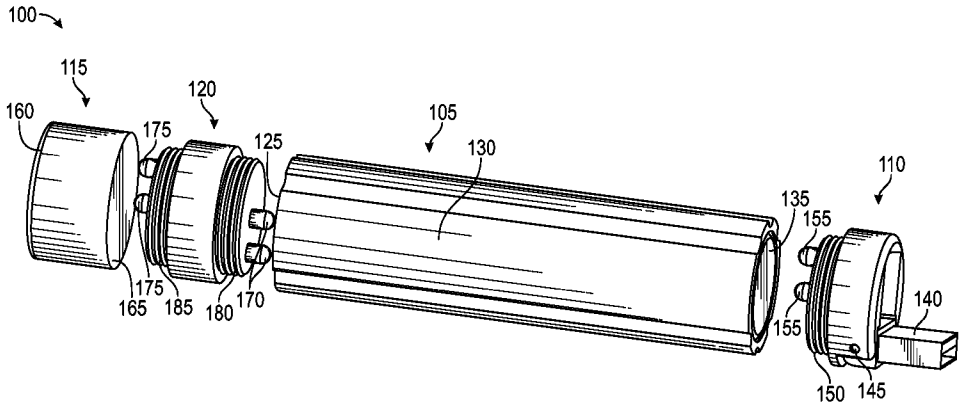

(56) **References Cited**

U.S. PATENT DOCUMENTS

3,026,957	A	3/1962	Gladstone	
D192,757	S	5/1962	Foss	
D201,320	S	6/1965	Hirohama	
3,438,529	A	4/1969	Lohrer	
D221,081	S	7/1971	Kahn	
4,497,881	A	2/1985	Bertolino	
D364,375	S	11/1995	Sakashita et al.	
6,501,197	B1	12/2002	Cornog et al.	
D554,621	S	11/2007	Yao et al.	
D572,586	S	7/2008	Medema	
D599,286	S	9/2009	Horito et al.	
D600,000	S	9/2009	Horito et al.	
7,633,759	B2 *	12/2009	Tracy	H01R 11/05 361/727
D625,251	S	10/2010	Workman et al.	
D629,746	S	12/2010	Workman et al.	
D642,057	S	7/2011	Reed et al.	
D650,771	S	12/2011	Chen	
8,080,972	B2	12/2011	Smith	
D651,564	S	1/2012	Workman et al.	
8,089,244	B2 *	1/2012	Zhang	H01R 24/68 320/107
8,139,353	B2	3/2012	Slaby et al.	
8,182,274	B1 *	5/2012	Cheng	H01R 13/652 439/131
D664,499	S	7/2012	Workman et al.	
D670,244	S	11/2012	Workman et al.	
D693,765	S	11/2013	Workman et al.	
D697,028	S	1/2014	Workman et al.	
9,024,570	B2	5/2015	Workman et al.	
2005/0032403	A1	2/2005	Ishihara	
2009/0098750	A1	4/2009	Randall	
2009/0167239	A1 *	7/2009	Yano	H01M 8/04552 320/101
2011/0116254	A1	5/2011	Workman et al.	
2011/0162690	A1	7/2011	Workman et al.	
2011/0190659	A1	8/2011	Long et al.	
2011/0290307	A1	12/2011	Workman et al.	
2012/0223673	A1 *	9/2012	Chen	H02J 7/0054 320/108
2012/0281392	A1	11/2012	Workman et al.	
2013/0181661	A1	7/2013	Workman et al.	

OTHER PUBLICATIONS

U.S. Appl. No. 29/496,019, filed Jul. 8, 2014, Goal Zero LLC.
U.S. Appl. No. 29/513,754, filed Jan. 5, 2015, Goal Zero LLC.
U.S. Appl. No. 61/261,656, filed Nov. 16, 2009, Workman et al.
U.S. Appl. No. 61/483,515, filed May 6, 2011, Workman et al.
U.S. Appl. No. 62/022,631, filed Jul. 9, 2014, Workman et al.
U.S. Appl. No. 12/945,583, filed Nov. 12, 2010, Workman et al.
U.S. Appl. No. 13/579,266, filed Aug. 15, 2012, Workman et al.
U.S. Appl. No. 29/387,865, filed Mar. 18, 2011, Workman et al.
U.S. Appl. No. 29/410,374, filed Jan. 6, 2012, Workman et al.
U.S. Appl. No. 29/410,376, filed Jan. 6, 2012, Workman et al.
U.S. Appl. No. 29/410,386, filed Jan. 6, 2012, Workman et al.

* cited by examiner

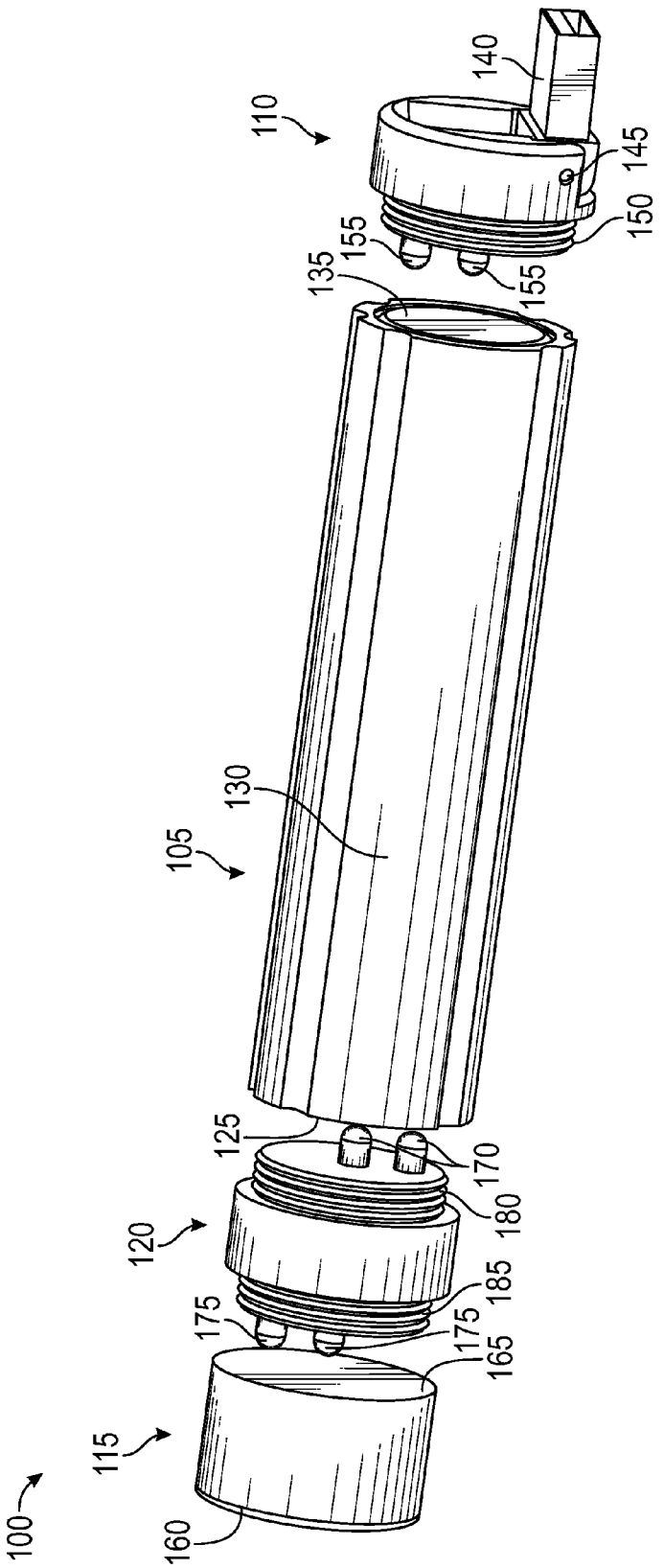
110
140
145
150
155
155
135
130
105
125
170
180
120
185
175
175
165
115
100
160

FIG. 1

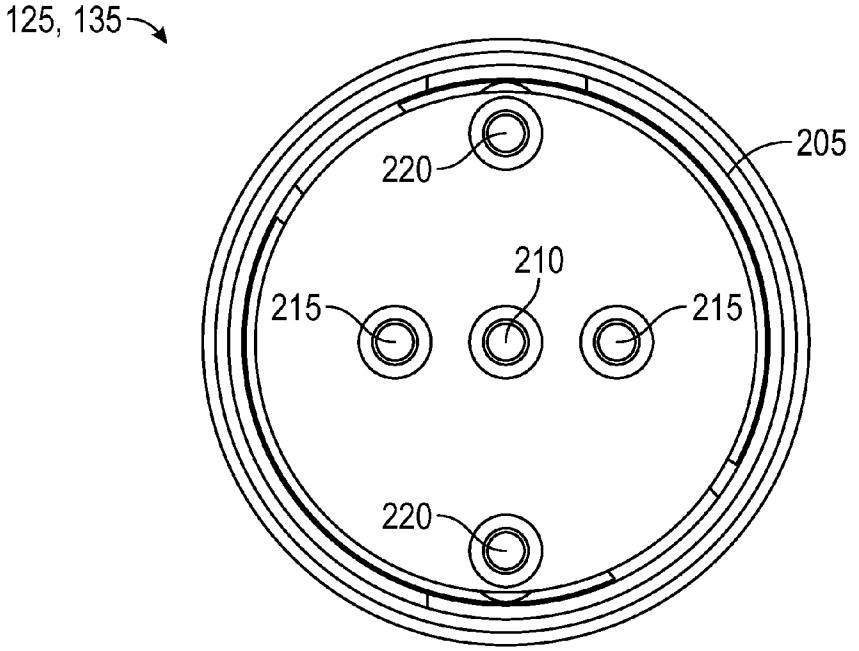

FIG. 2A

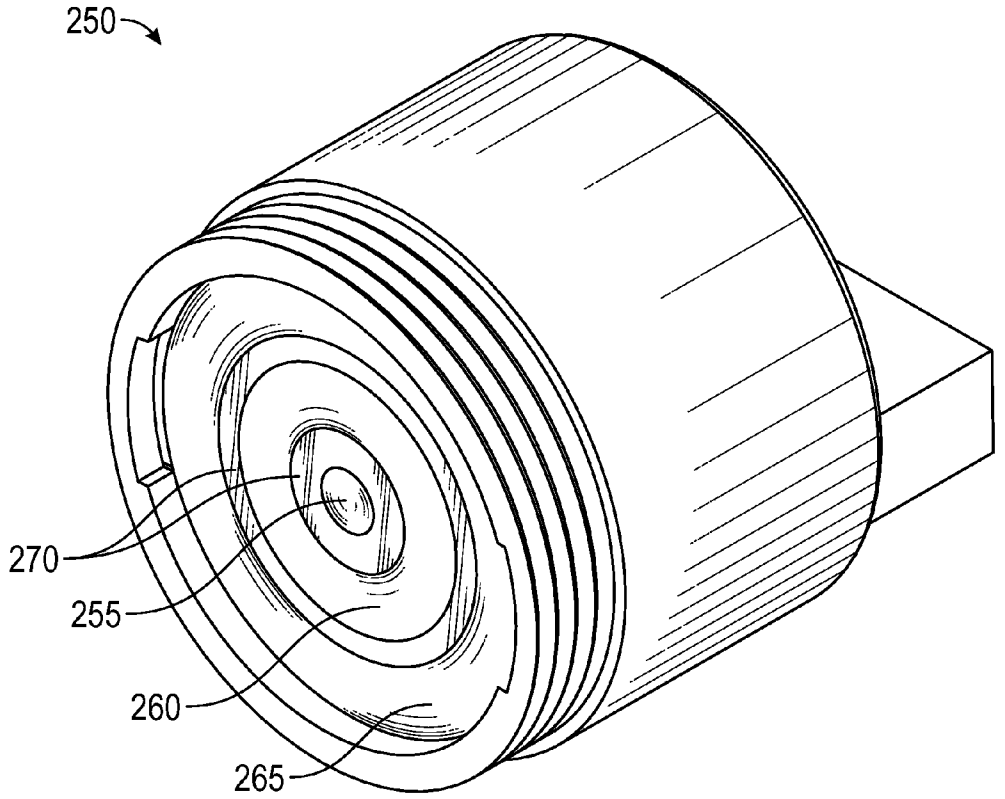

FIG. 2B

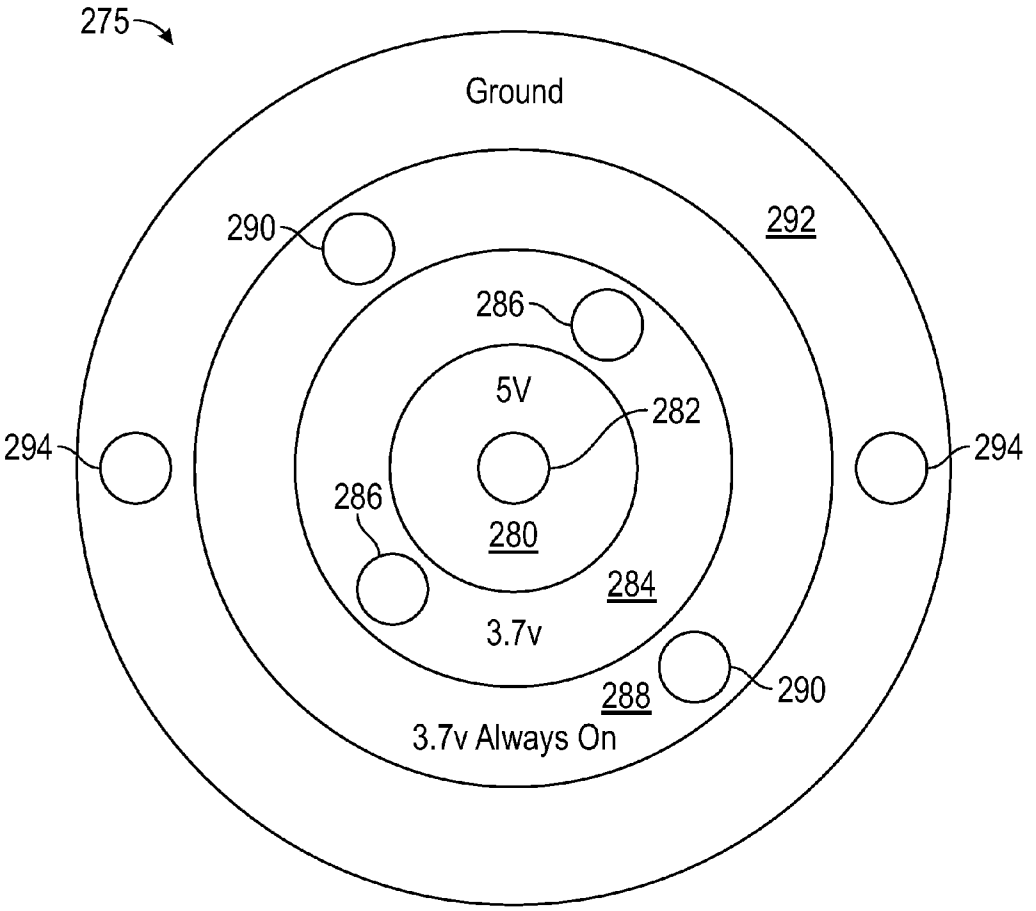
275
Ground
290
292
286
5V
282
294
294
286
280
284
3.7v
288
290
3.7v Always On

FIG. 2C

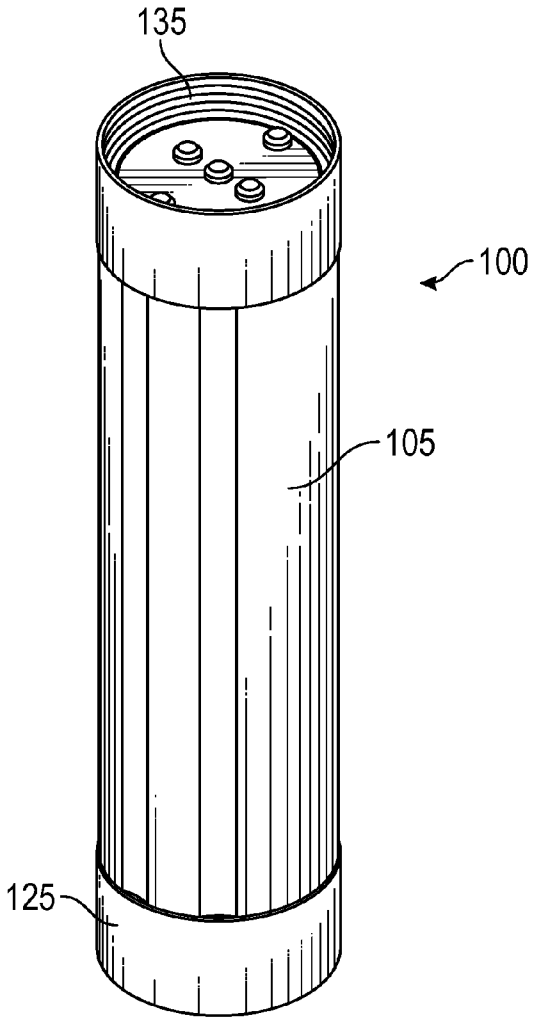

FIG. 3A

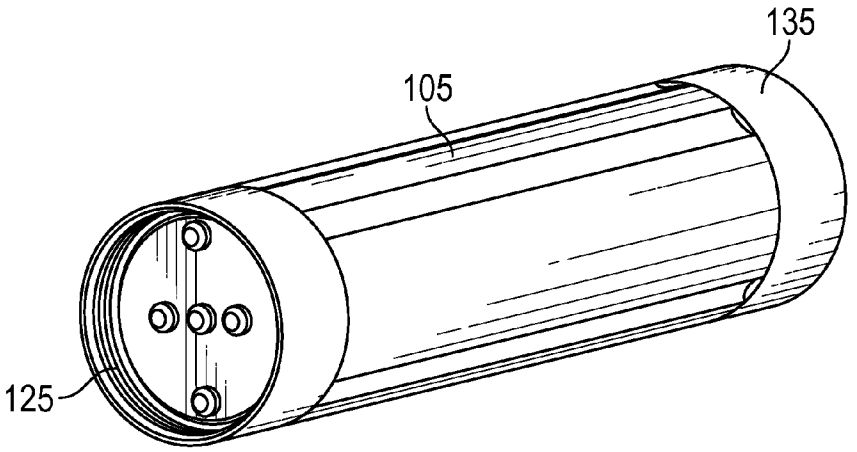

FIG. 3B

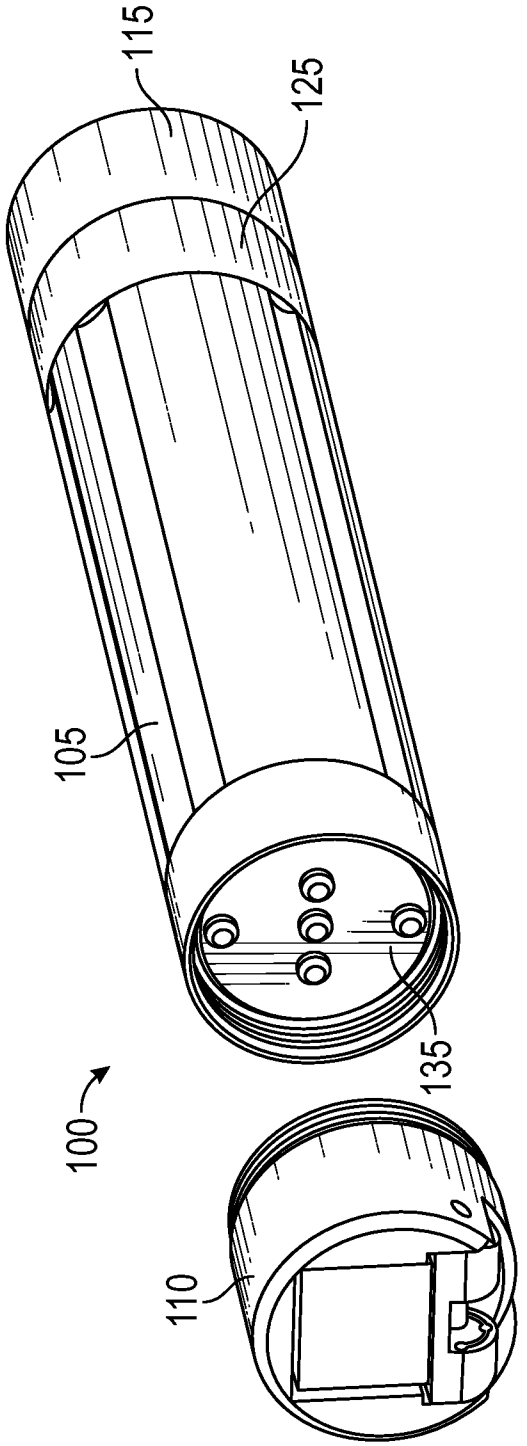

FIG. 4

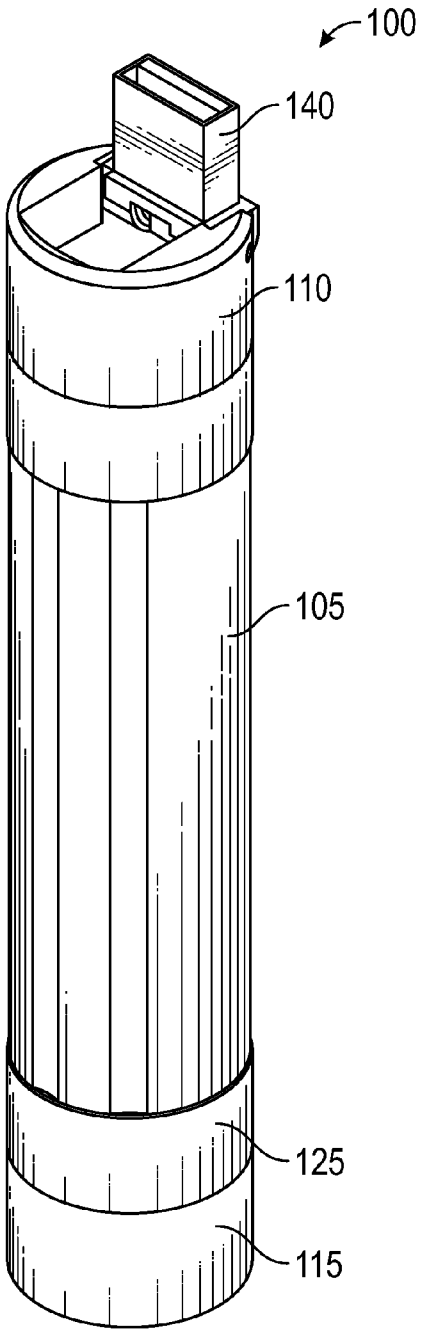

FIG. 5A

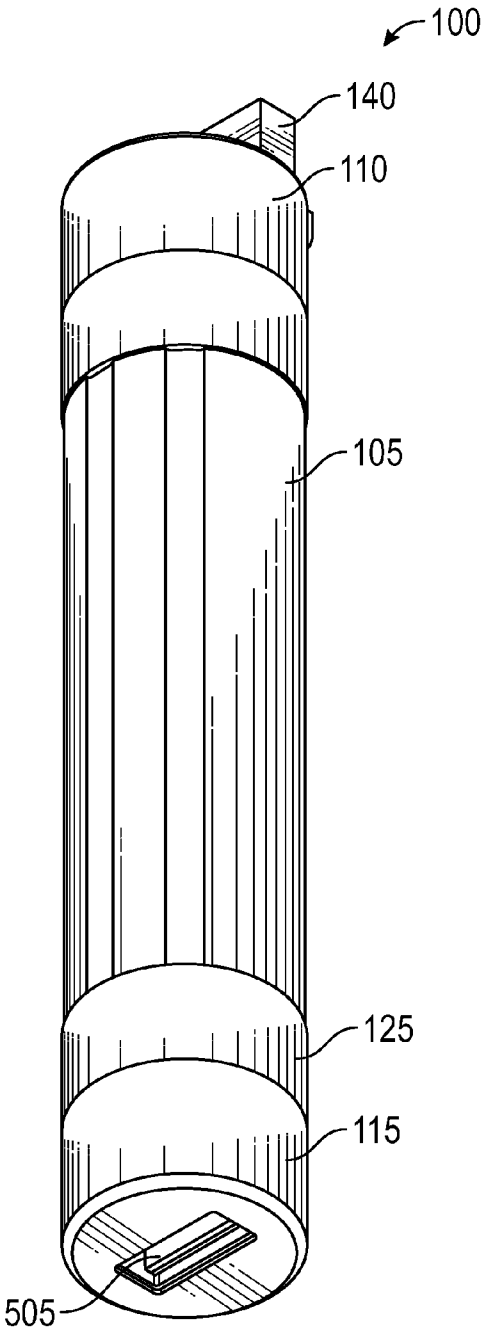

FIG. 5B

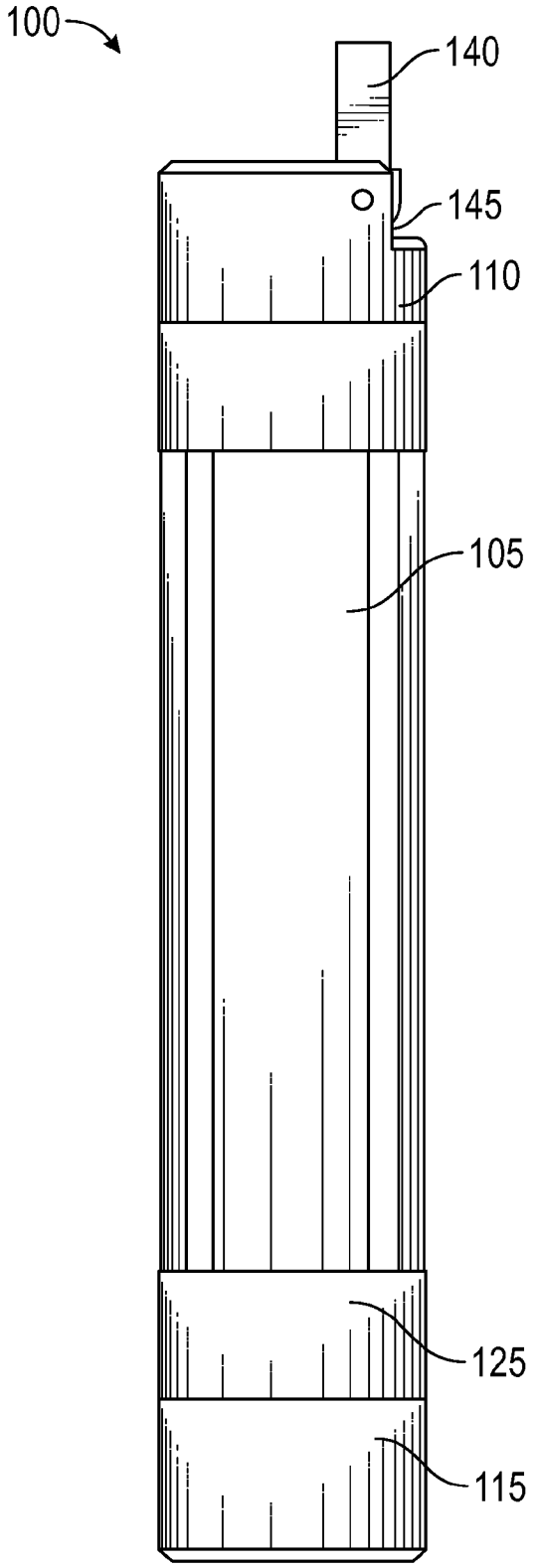

FIG. 5C

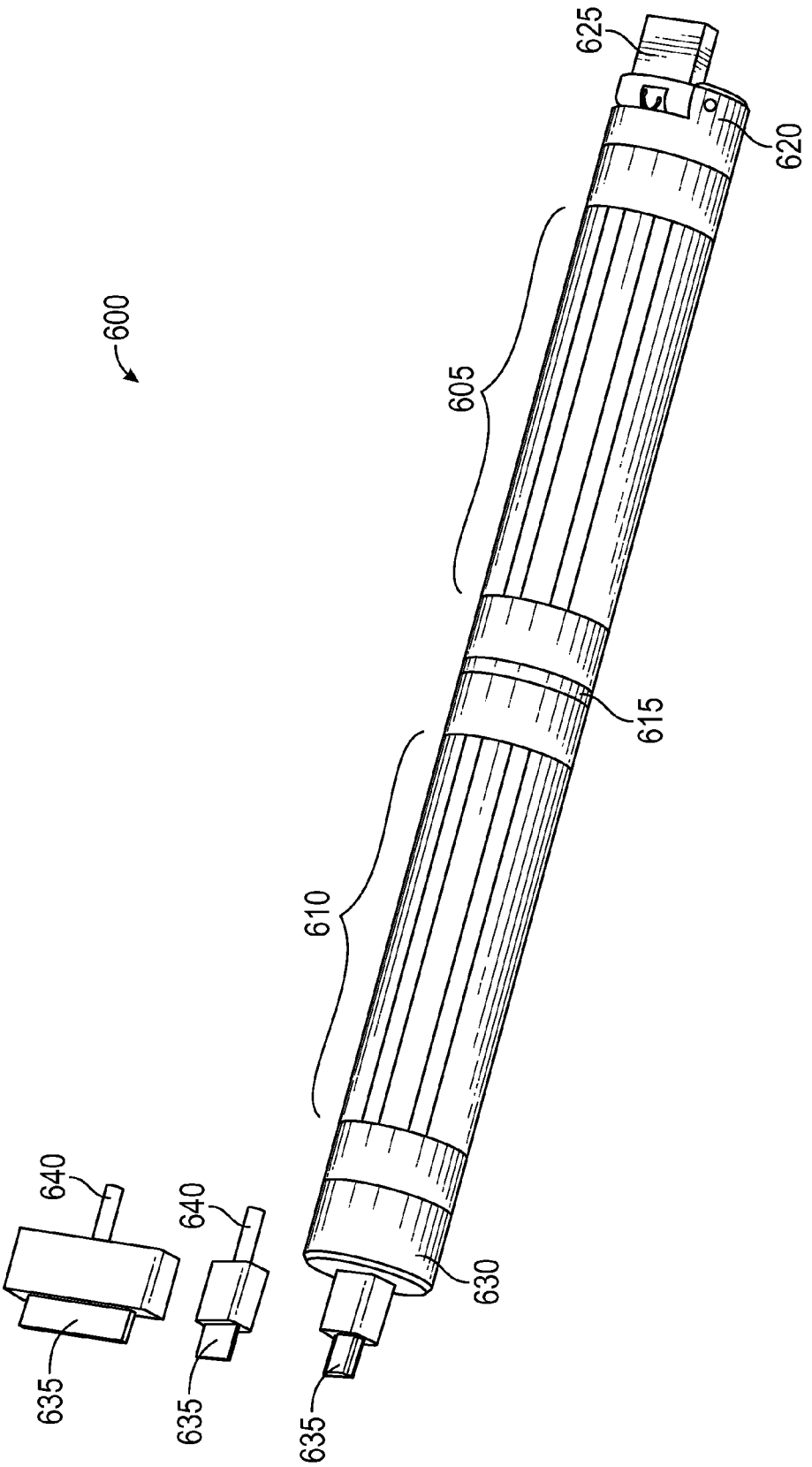

FIG. 6A

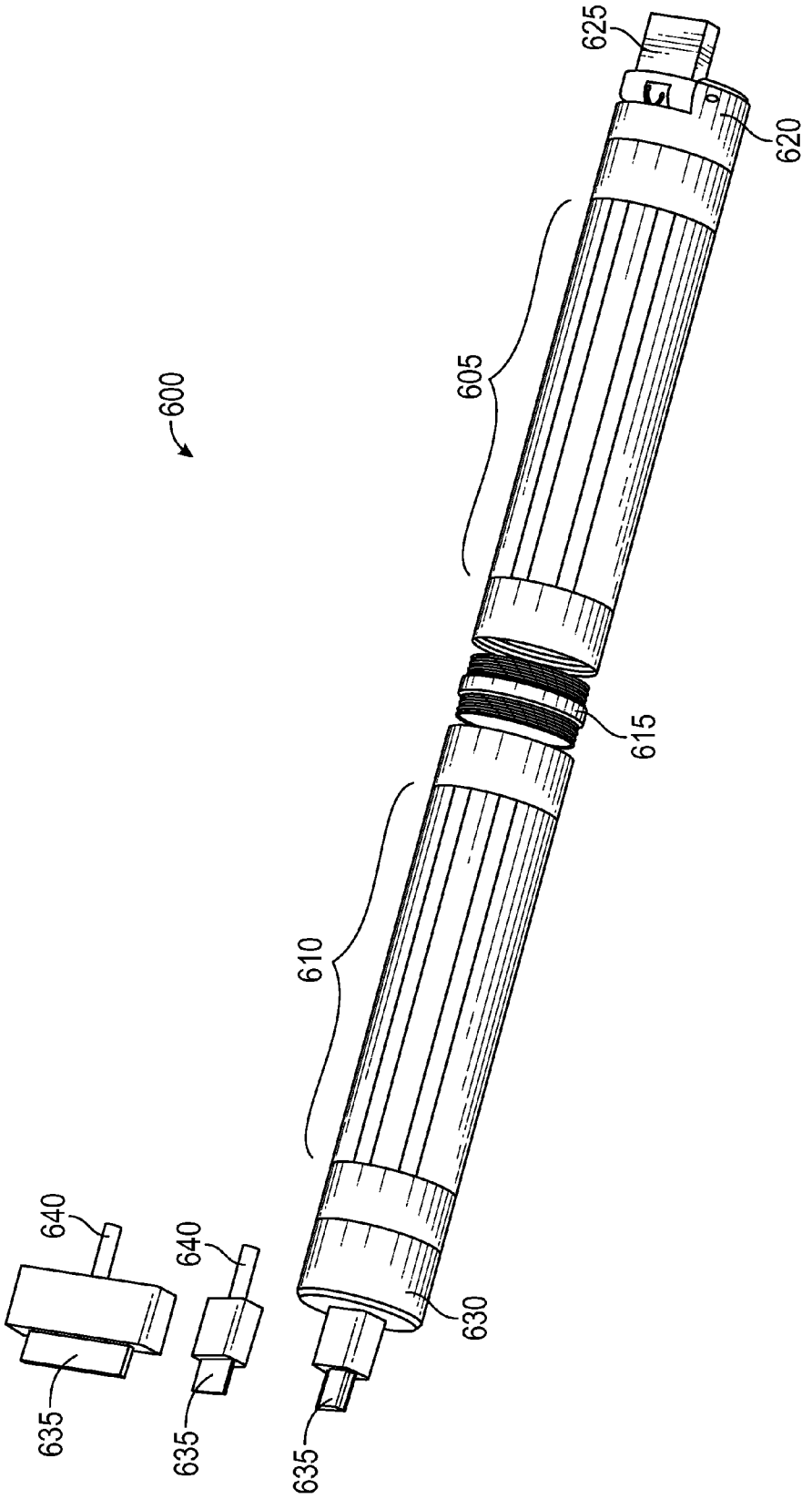

FIG. 6B

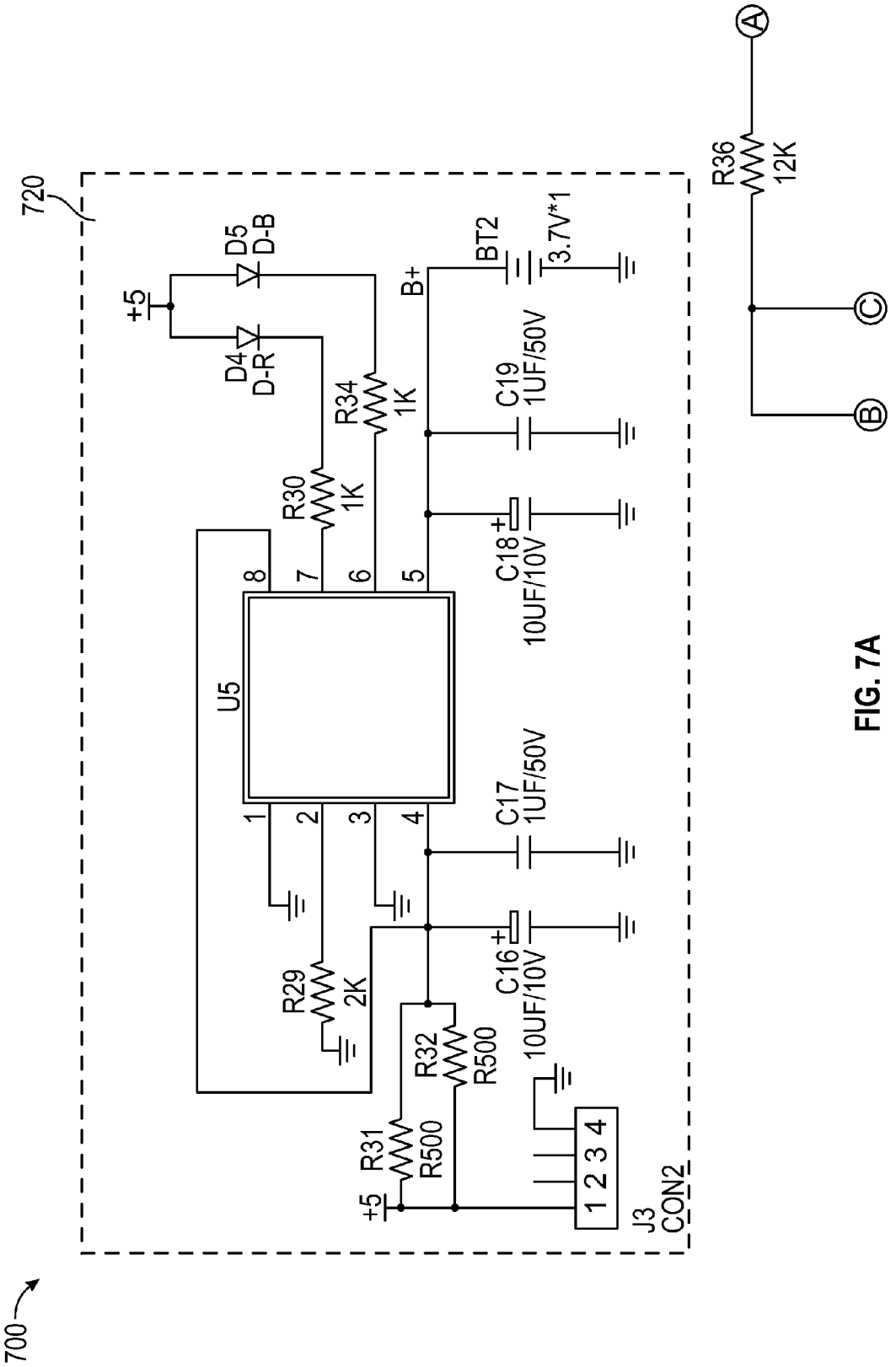
720
700
+5
D5
D-B
D4
D-R
R34
1K
R30
1K
U5
8
7
6
5
1
2
3
4
R29
2K
R31
R500
R32
R500
+5
B+
BT2
3.7V*1
C19
1UF/50V
C18
10UF/10V
C17
1UF/50V
C16
10UF/10V
1 2 3 4
J3
CON2
R36
12K
A
B
C

FIG. 7A

FIG. 7B

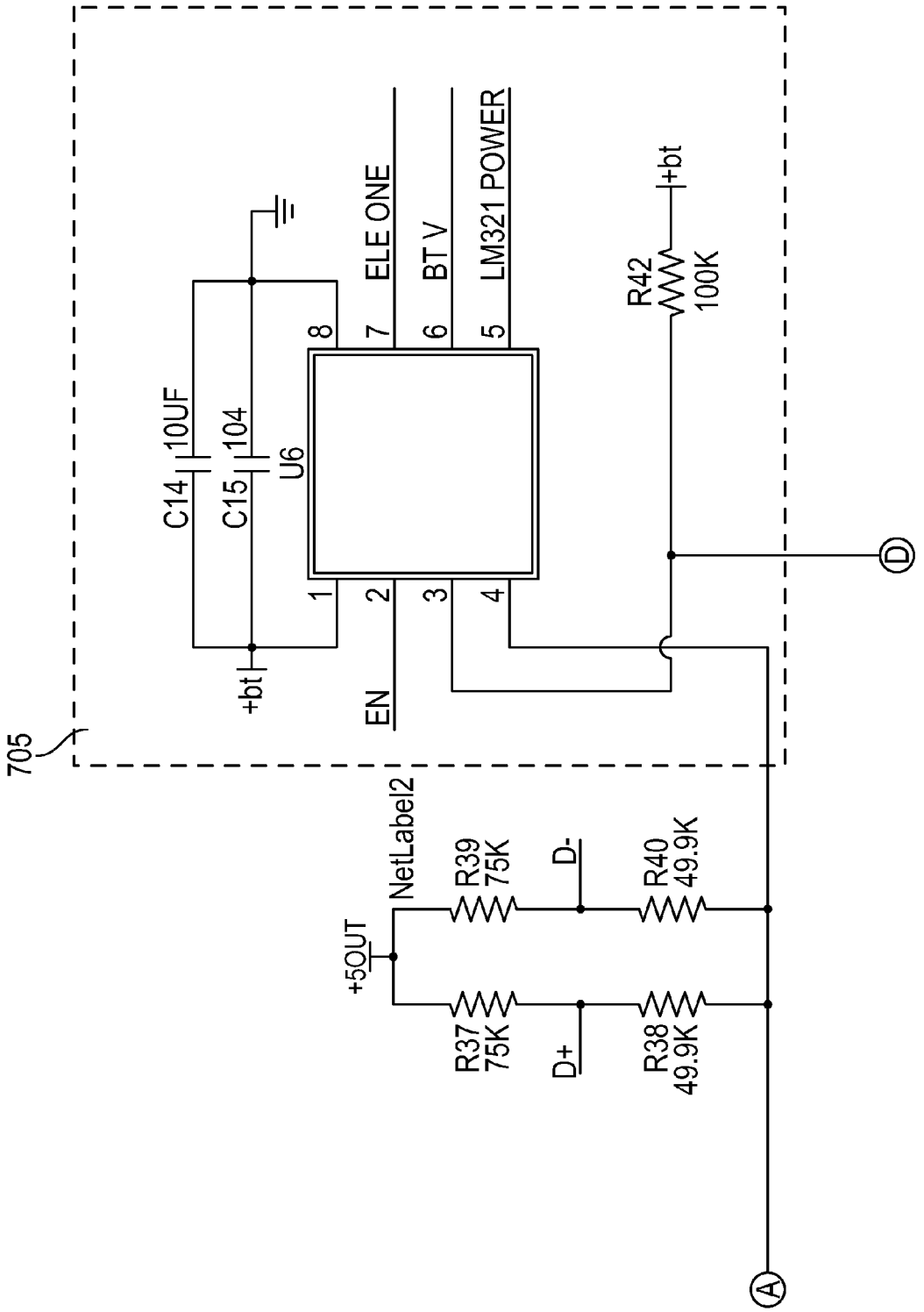
705
C14
10UF
C15
104
U6
+bt
EN
ELE ONE
BT V
LM321 POWER
1
2
3
4
5
6
7
8
R42
100K
+bt
D
A
+5OUT
NetLabel2
R37
75K
R39
75K
D+
D-
R38
49.9K
R40
49.9K

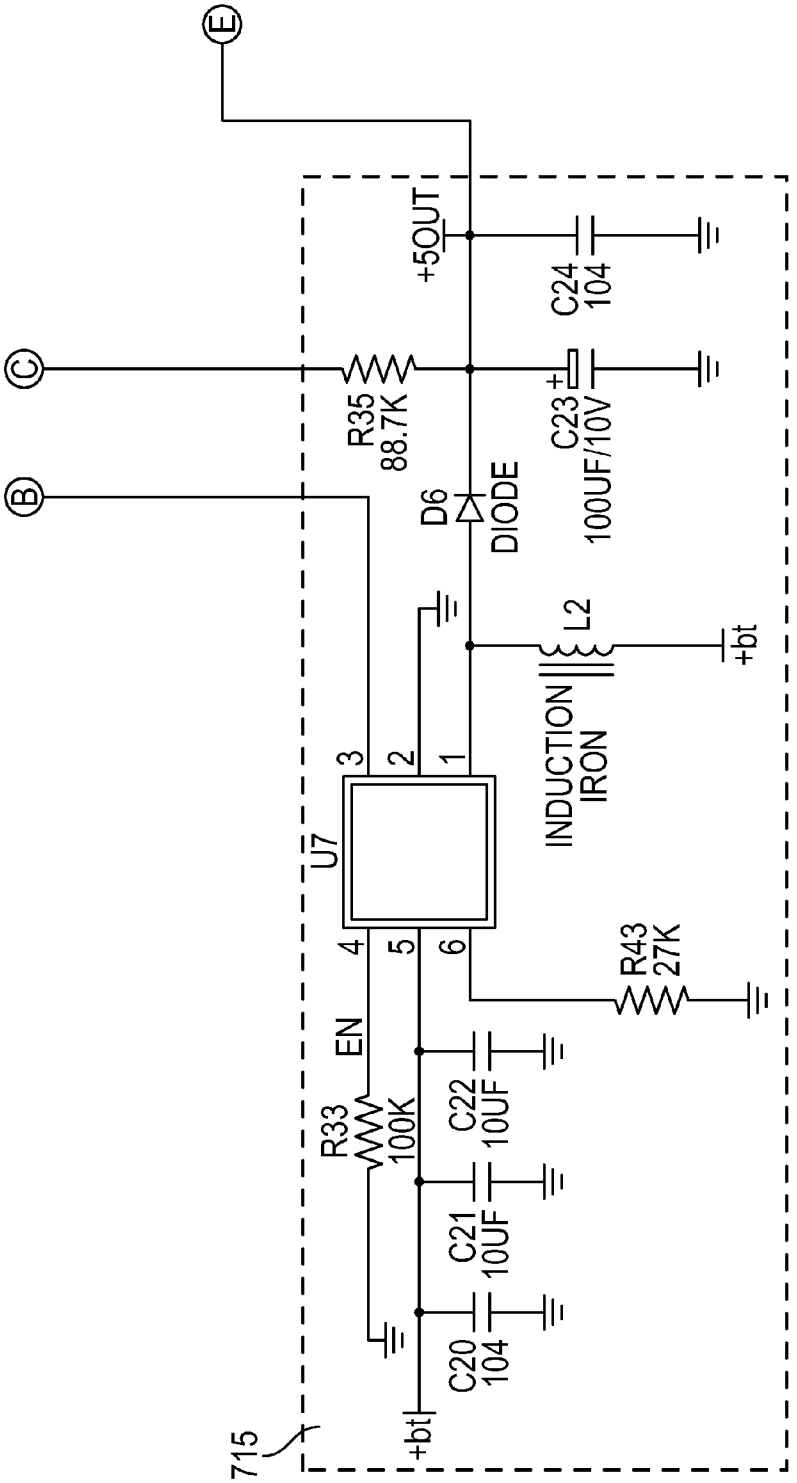
E
+5OUT
C24
104
C
R35
88.7K
C23
100UF/10V
B
D6
DIODE
L2
+bt
INDUCTION
IRON
3
2
1
U7
4
5
6
R43
27K
EN
R33
100K
C22
10UF
C21
10UF
C20
104
+bt
715

FIG. 7C

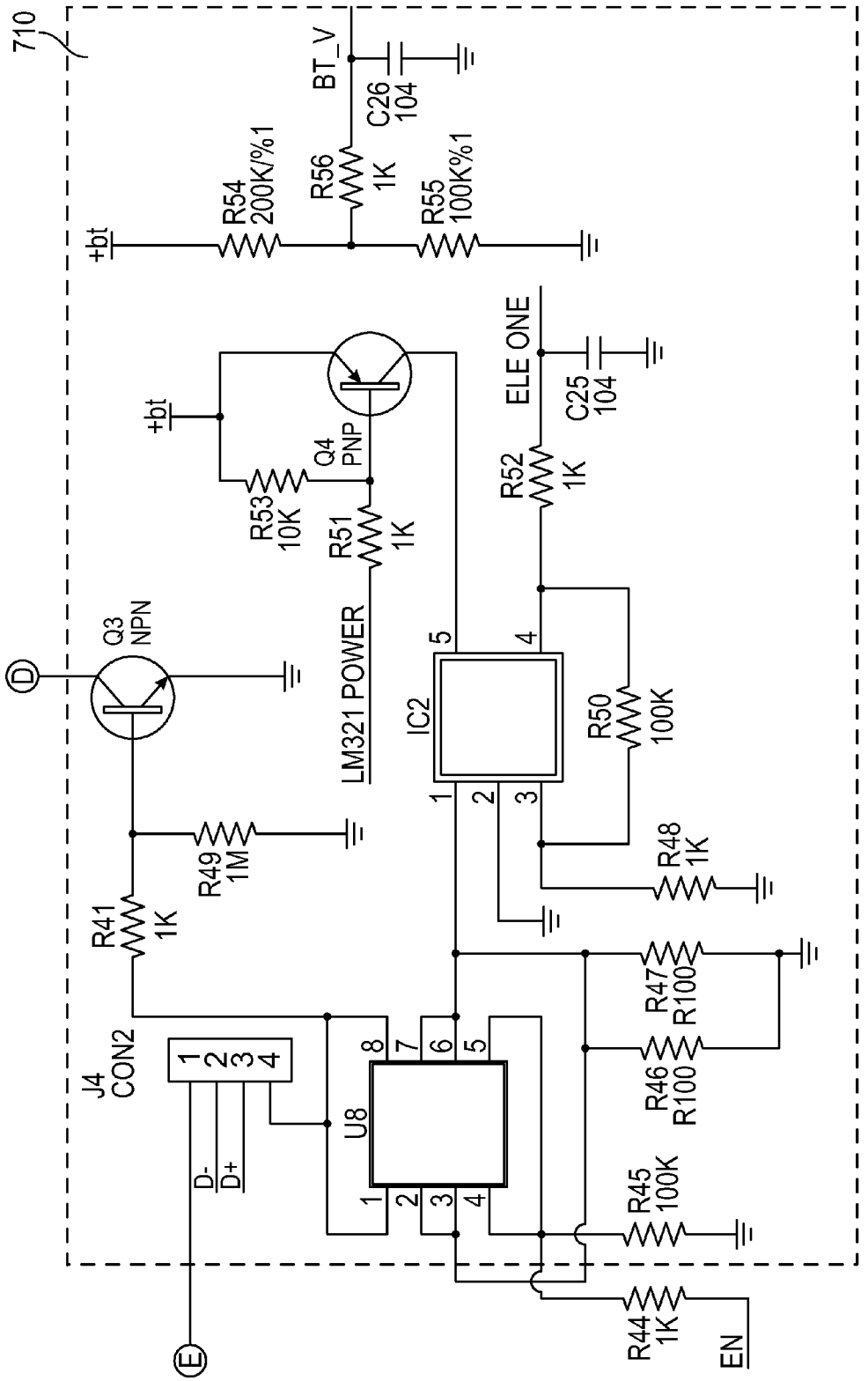
710
+bt
R54
200K/%1
R56
1K
BT_V
C26
104
R55
100K%1
+bt
R53
10K
Q4
PNP
R51
1K
ELE ONE
C25
104
R52
1K
D
Q3
NPN
LM321 POWER
IC2
R50
100K
R49
1M
R48
1K
R41
1K
R47
R100
R46
R100
J4
CON2
1
2
3
4
D-
D+
U8
R45
100K
E
R44
1K
EN

FIG. 7D

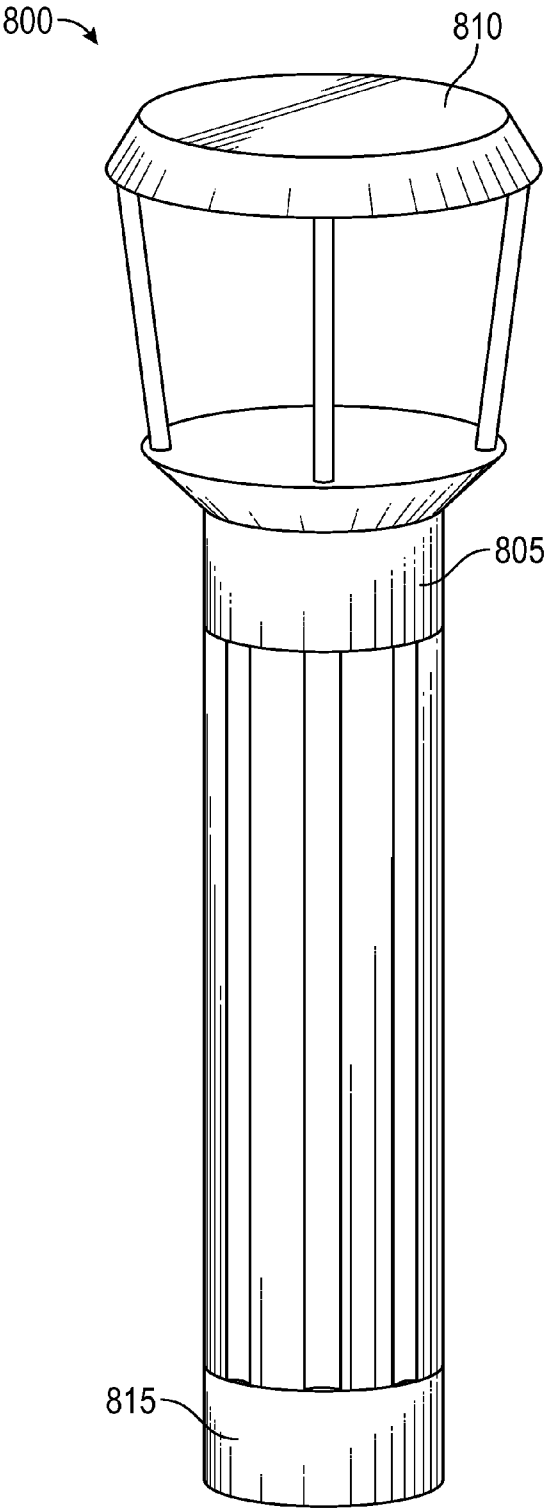

FIG. 8

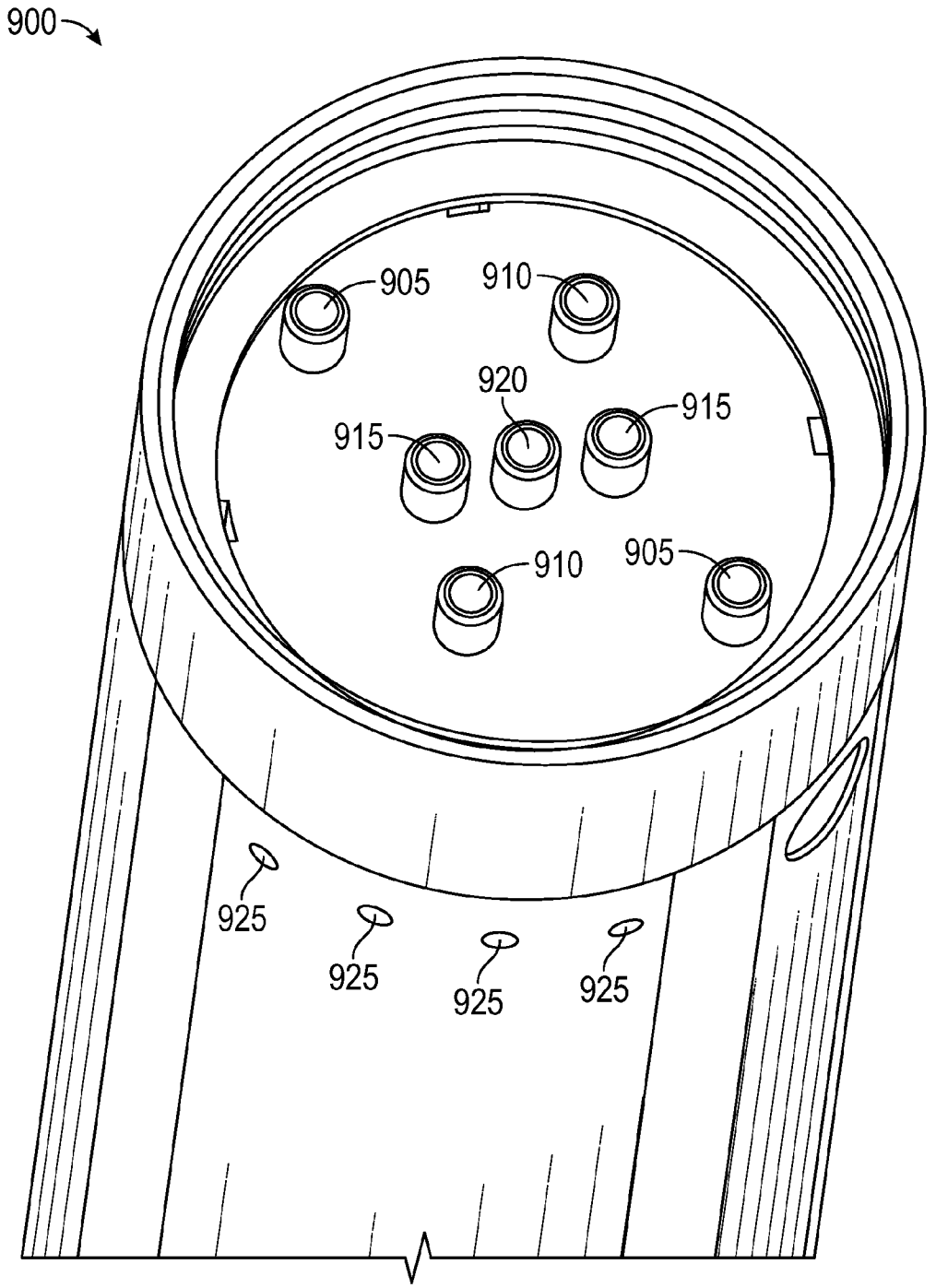

FIG. 9

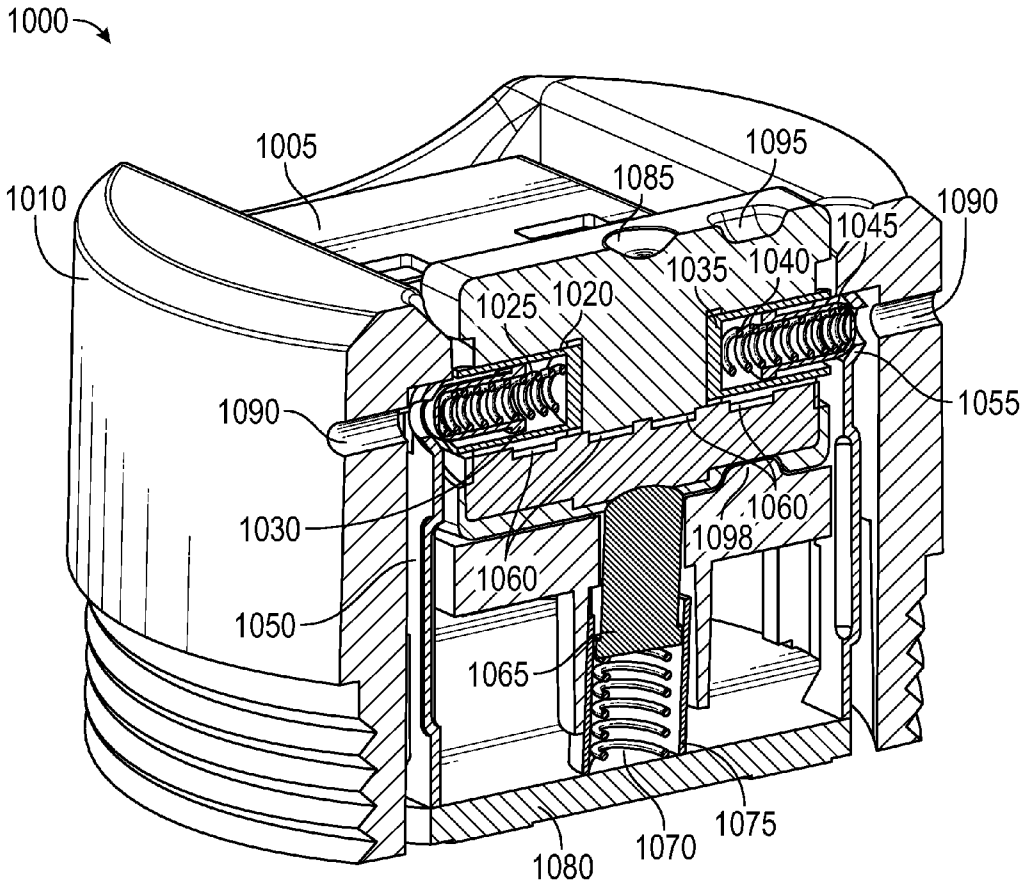
1000
1005
1010
1085
1095
1090
1045
1035
1040
1025
1020
1090
1055
1030
1060
1098
1060
1050
1065
1075
1070
1080

FIG. 10

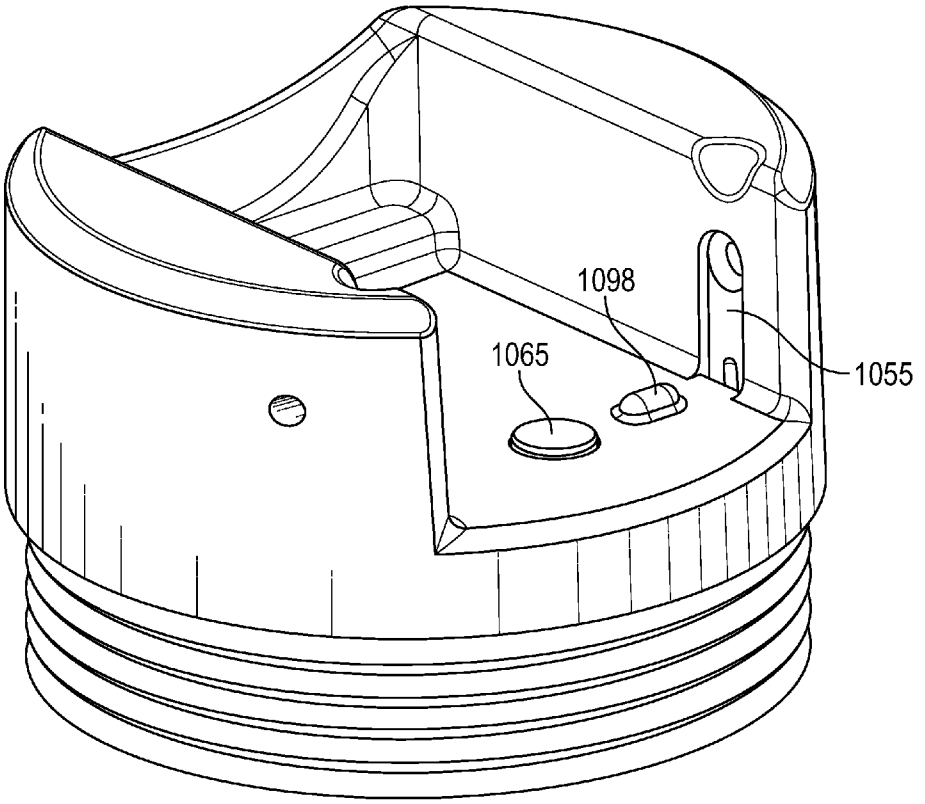

FIG. 11

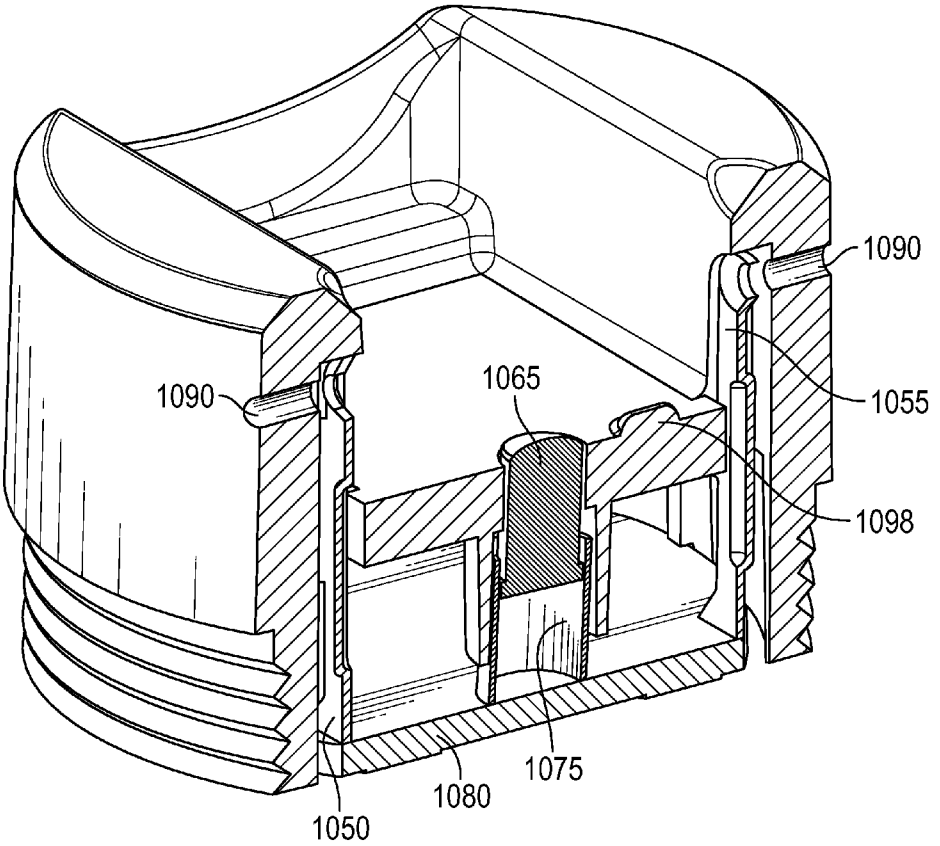

FIG. 12

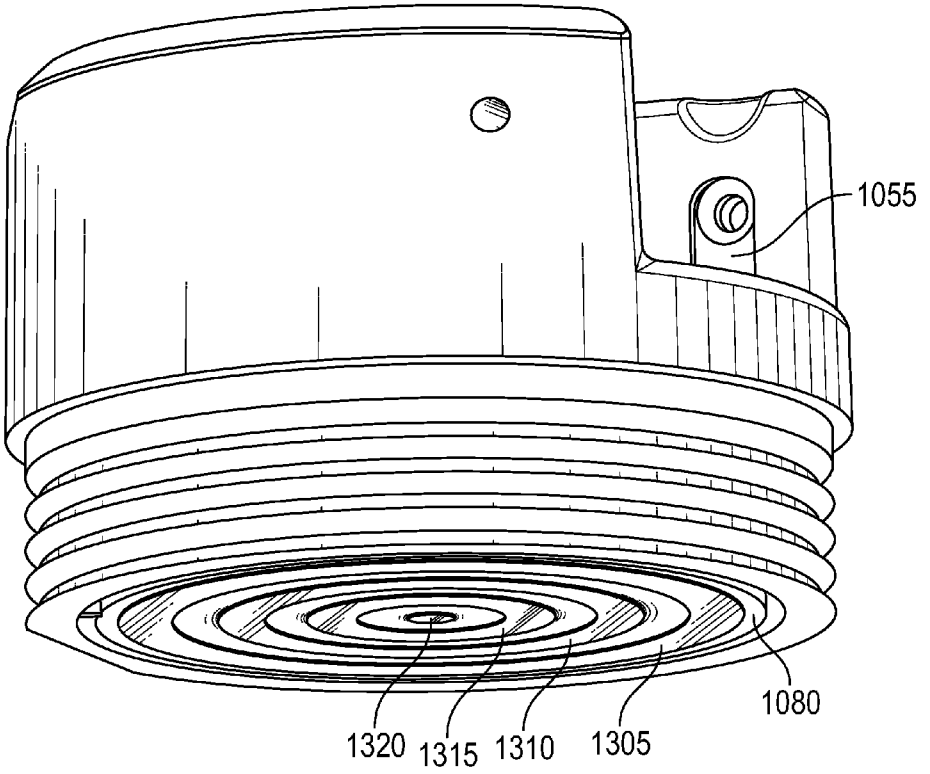

FIG. 13

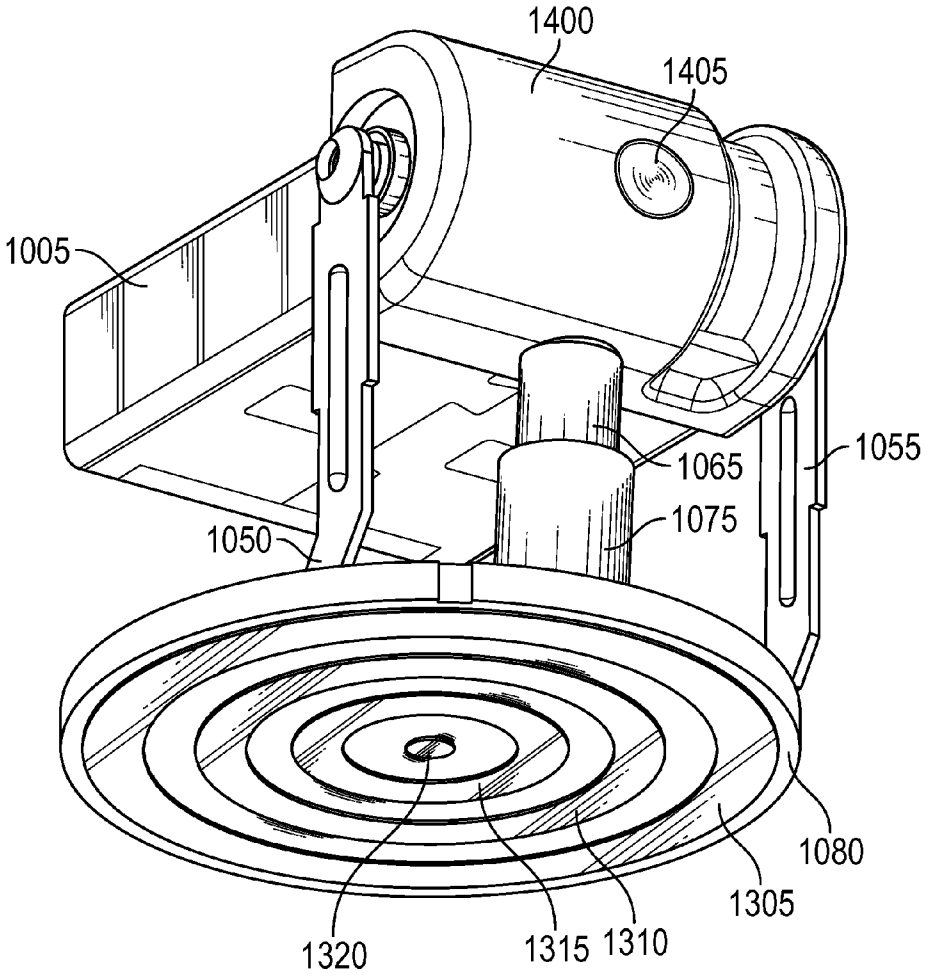

FIG. 14

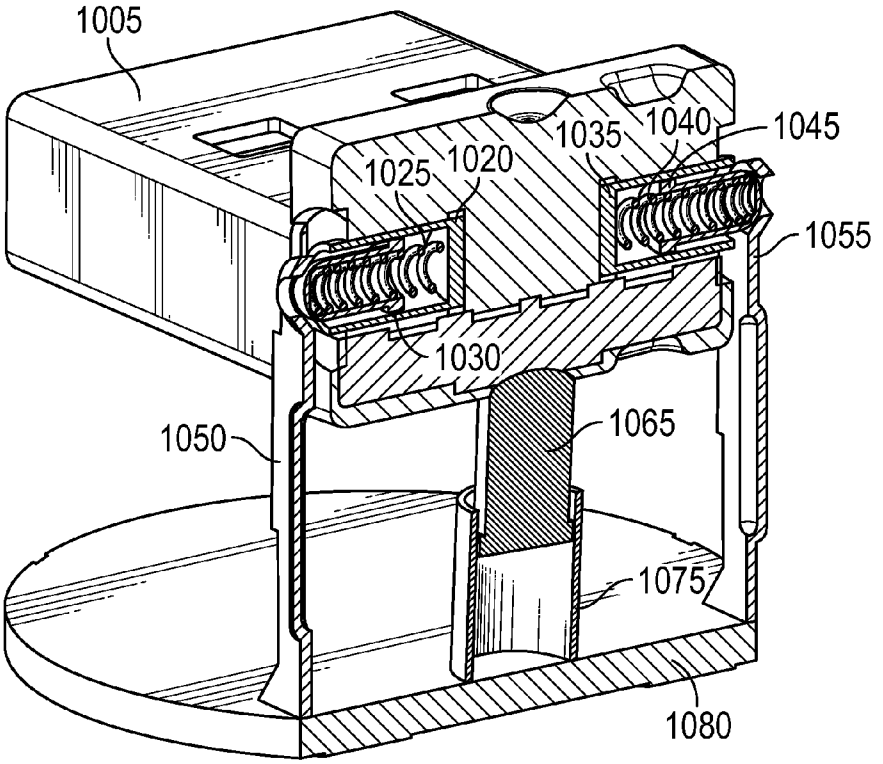

FIG. 15A

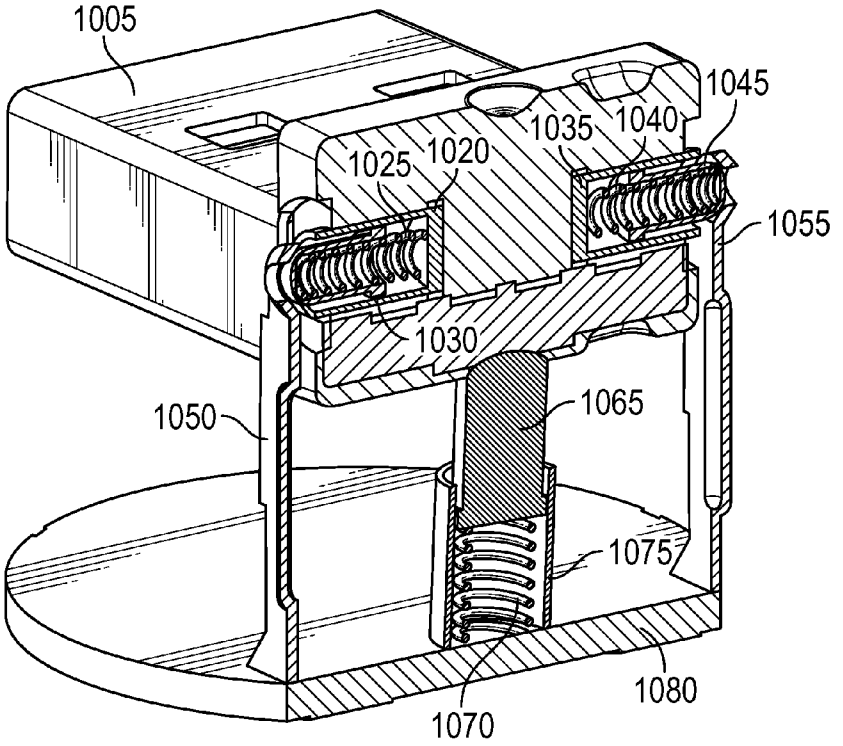
1005
1045
1035
1040
1025
1020
1055
1030
1065
1050
1075
1080
1070

FIG. 15B

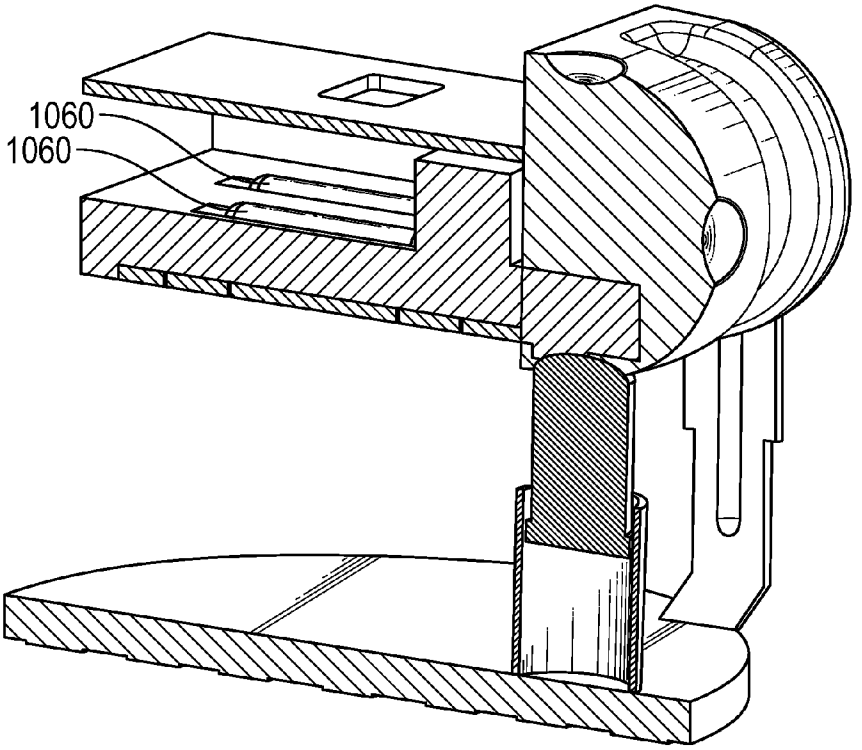

FIG. 16

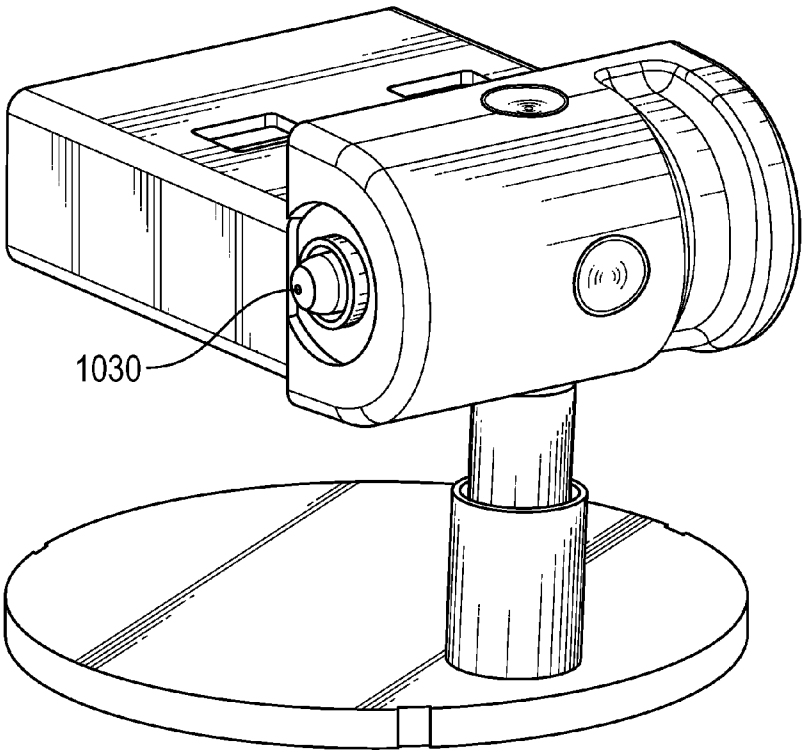

FIG. 17

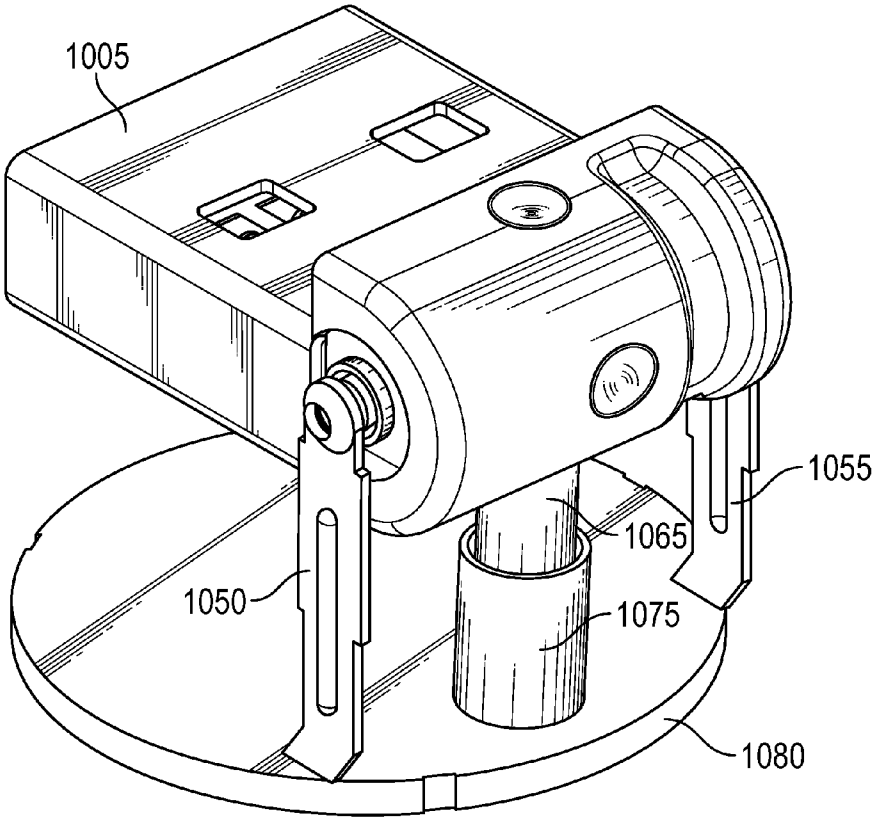

FIG. 18

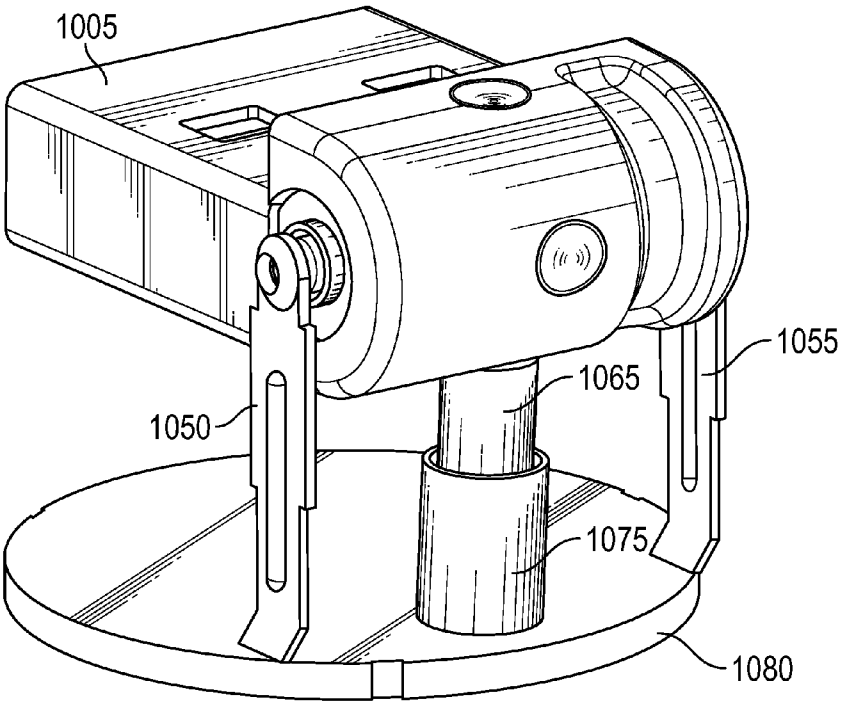

FIG. 19

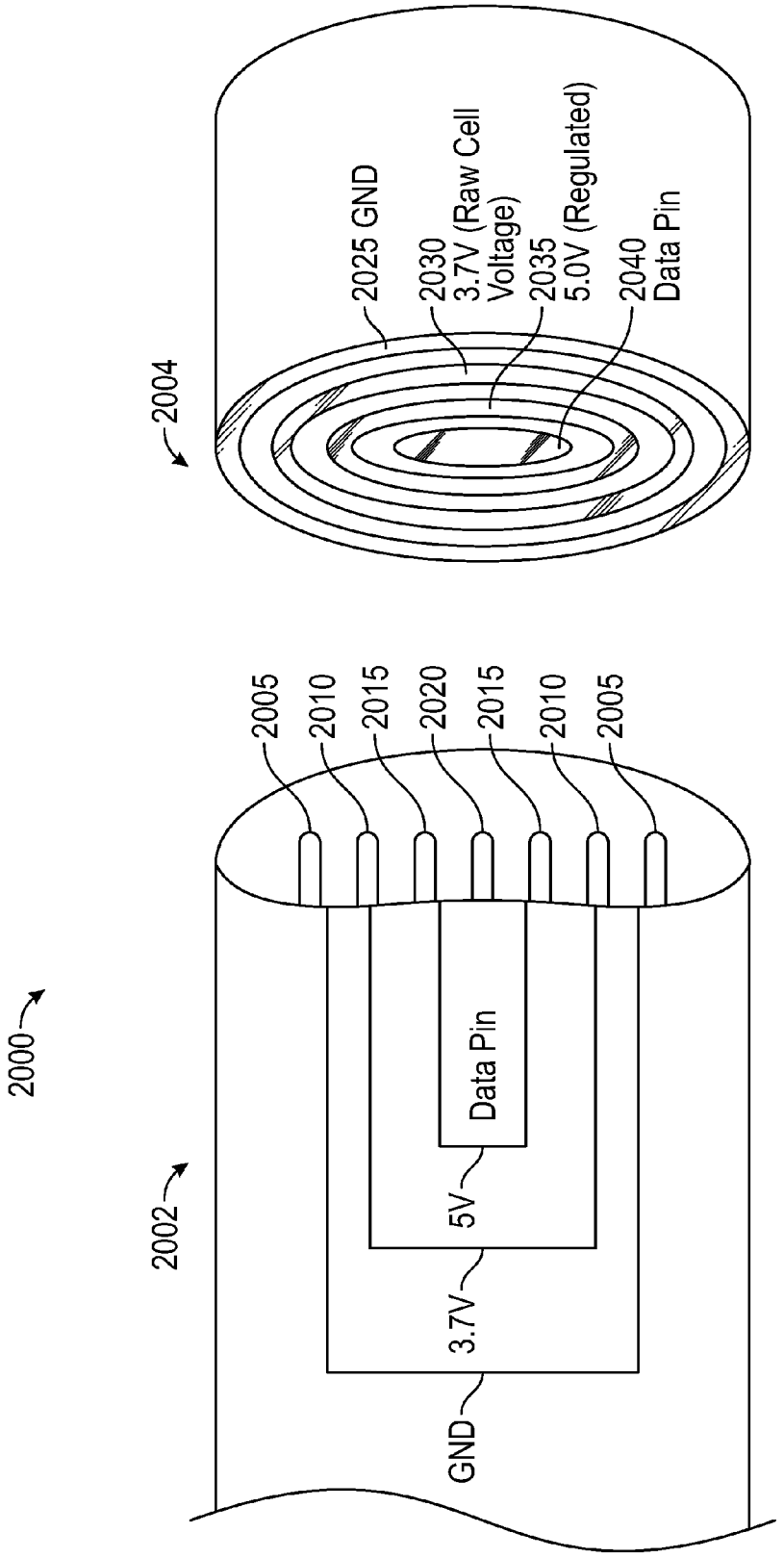
2004
2025 GND
2030
3.7V (Raw Cell Voltage)
2035
5.0V (Regulated)
2040
Data Pin
2000
2002
2005
2010
2015
2020
2015
2010
2005
Data Pin
5V
3.7V
GND

FIG. 20A

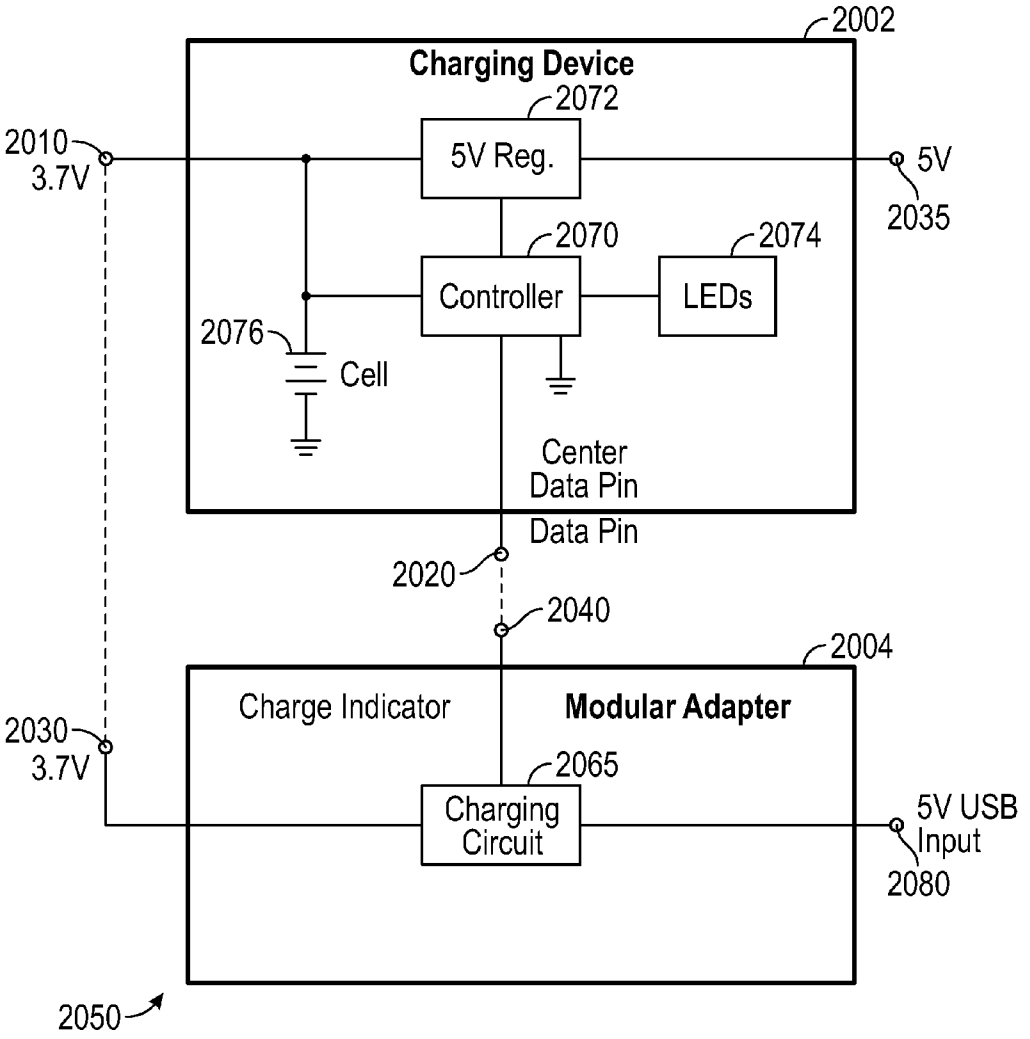
2002
Charging Device
2072
5V Reg.
2010
3.7V
5V
2035
2070
2074
Controller
LEDs
2076
Cell
Center
Data Pin
Data Pin
2020
2040
2004
Charge Indicator
Modular Adapter
2030
3.7V
2065
Charging
Circuit
5V USB
Input
2080
2050

FIG. 20B

RECONFIGURABLE ENERGY STORAGE AND POWER SUPPLY DEVICE

CROSS-REFERENCE TO RELATED APPLICATIONS

The present application is a continuation of U.S. application Ser. No. 13/719,097, filed Dec. 18, 2012, which claims the benefit of U.S. Provisional Application No. 61/584,005, filed Jan. 6, 2012, and U.S. Provisional Application No. 61/707,711, filed Sep. 28, 2012, all of which are incorporated herein by reference in their entireties.

BACKGROUND

The present disclosure relates generally to the field of charging devices and methods. According to some embodiments, the present disclosure relates to a device (e.g., a portable device) for charging rechargeable energy storage devices (e.g., batteries) and/or for charging other devices. According to further embodiments, the present disclosure relates to a modular, portable, rechargeable energy storage and power supply device that provides a reconfigurable platform, which can be customized for use in a wide variety of applications by interchangeably connecting various adapters and/or accessories to recharge batteries in other devices and/or to serve as a primary source of power in a wide variety of connectible accessories.

Electrical devices often use batteries as an electrical power source for operating the devices when away from a power outlet. Batteries are used, for example, in flashlights, remote controls, computing devices (e.g., handheld computers) and accessories (e.g., keyboards, mice, etc.), mobile entertainment devices (e.g., game systems and components, audio/video players, etc.), and various other types of electrical devices. The use of batteries to power an electrical device for a length of time without the need to plug the device into a wall socket or other energy source may enhance the mobility of the device.

Electrical devices may be designed to utilize built-in batteries and/or removable batteries. Rechargeable batteries used in electrical devices that utilize built-in or fixed batteries are often recharged from within the device by connecting a power source to the device itself. The power source may be a fixed or stationary power source, such as an electrical outlet, or a portable or mobile power source, such as a rechargeable battery charger.

SUMMARY

One embodiment of the disclosure relates to a charging device that includes a body having a rechargeable energy storage device and a housing, an interface pivotally coupled to the housing, the interface including a first conductor and a second conductor and configured to transmit power between the rechargeable energy storage device and a device connected to the interface, a first rigid post, a first pin, a first compressible element positioned to press the first pin against the first rigid post, a second rigid post, a second pin, and a second compressible element positioned to press the second pin against the second rigid post. The first rigid post is coupled to a first contact associated with the rechargeable energy storage device, and the first pin is configured to couple the first rigid post to the first conductor of the interface such that the first pin and the first rigid post provide a conductive path from the first conductor of the interface to the first contact. The second rigid post is coupled to a second contact associated with the rechargeable energy storage device, and the second pin is configured to couple the second rigid post to the second conductor of the interface such that the second pin and the second rigid post provide a conductive path from the second conductor of the interface to the second contact. The interface is configured to pivot about an axis defined by the first pin and the second pin.

Another embodiment of the disclosure relates to a charging device that includes a body and a modular adapter. The body includes a rechargeable energy storage device and a housing, the housing having at least a first coupling portion. The modular adapter has a second coupling portion configured to be mated to the first coupling portion of the housing. The modular adapter includes an interface having a first conductor and a second conductor and configured to transmit power between the rechargeable energy storage device and a device connected to the interface, and adapter base, a first rigid post coupled to a first contact of the adapter base, a first pin, a first compressible element positioned to press the first pin against the first rigid post, a second rigid post coupled to a second contact of the adapter base, a second pin, and a second compressible element positioned to press the second pin against the second rigid post. The adapter base includes a plurality of contacts configured to be electrically coupled with contacts of the body, the first pin is configured to couple the first rigid post to the first conductor of the interface such that the first pin and the first rigid post provide a conductive path from the first conductor of the interface to the first contact of the adapter base, the second pin is configured to couple the second rigid post to the second conductor of the interface such that the second pin and the second rigid post provide a conductive path from the second conductor of the interface to the second contact of the adapter base, and the interface is configured to pivot about an axis defined by the first pin and the second pin. When the modular adapter is mated to the housing, the body and the modular adapter form a single substantially rigid structure.

Another embodiment of the disclosure relates to a modular adapter for a charging device that includes an interface, an adapter base, a first rigid post coupled to a first contact of the adapter base, a first pin, a first compressible element positioned to press the first pin against the first rigid post, a second rigid post coupled to a second contact of the adapter base, a second pin, and a second compressible element positioned to press the second pin against the second rigid post. The interface includes a first conductor and a second conductor and is configured to transmit power between the charging device and a device connected to the interface. The adapter base includes a plurality of contacts configured to be electrically coupled with contacts of the charging device, the first pin is configured to couple the first rigid post to the first conductor of the interface such that the first pin and the first rigid post provide a conductive path from the first conductor of the interface to the first contact of the adapter base, the second pin is configured to couple the second rigid post to the second conductor of the interface such that the second pin and the second rigid post provide a conductive path from the second conductor of the interface to the second contact of the adapter base, and the interface is configured to pivot about an axis defined by the first pin and the second pin.

BRIEF DESCRIPTION OF THE DRAWINGS

FIG. **1** is an illustrative view of a charging device according to an exemplary embodiment.

FIG. **2**A is an illustrative view of an end of the charging device shown in FIG. **1** according to an exemplary embodiment.

FIG. **2**B is an illustrative view of an end of an adapter for use with a charging device according to an exemplary embodiment.

FIG. **2**C is an illustrative view of a contact arrangement for a charging device according to an exemplary embodiment.

FIGS. **3**A and **3**B are various illustrative views of the body for the charging device shown in FIGS. **1** and **2**A without modular adapters attached according to exemplary embodiments.

FIG. **4** is an illustrative view of the charging device shown in FIGS. **1**, **2**A, **3**A, and **3**B and including modular adapters according to an exemplary embodiment.

FIGS. **5**A through **5**C are various illustrative views of the charging device shown in FIGS. **1**, **2**A and **3**A-**4** with attached modular adapters according to an exemplary embodiment.

FIGS. **6**A and **6**B are illustrative views of a charging system having two charging devices coupled to one another according to an exemplary embodiment.

FIGS. **7**A-**7**D show a circuit diagram of a circuit of a charging device according to an exemplary embodiment.

FIG. **8** is an illustrative view of a charging device including a lantern adapter according to an exemplary embodiment.

FIG. **9** is an illustrative view of an end of a charging device according to an exemplary embodiment.

FIG. **10** is a cutaway perspective view of a modular adapter for use with a charging device such as the charging device shown in FIG. **9** according to an exemplary embodiment.

FIG. **11** is a cutaway perspective view of a body of the modular adapter shown in FIG. **10** according to an exemplary embodiment.

FIG. **12** is a cutaway perspective view of the modular adapter body shown in FIG. **11**B according to an exemplary embodiment.

FIG. **13** is a perspective view illustrating an underside of the modular adapter body shown in FIG. **11**, including a base, according to an exemplary embodiment.

FIG. **14** is a perspective view of the electrical components of the modular adapter shown in FIG. **10**, including the base, posts, and interface, according to an exemplary embodiment.

FIGS. **15**A through **15**B are cutaway perspective views of the components of the modular adapter shown in FIG. **14** according to an exemplary embodiment.

FIG. **16** is a bisecting cutaway perspective view of the components of the modular adapter shown in FIG. **14** according to an exemplary embodiment.

FIG. **17** is a perspective view of the interface and base without the posts that electrically connect the interface to the base according to an exemplary embodiment.

FIGS. **18** and **19** are additional perspective views of the components of the modular adapter shown in FIG. **14** according to an exemplary embodiment.

FIG. **20**A is an illustration of the input/output interfaces of a charging device and modular adapter according to an exemplary embodiment.

FIG. **20**B is a block diagram of an electrical circuit formed by the charging device and modular adapter of FIG. **20**A according to an exemplary embodiment.

DETAILED DESCRIPTION

Referring generally to the figures, a modular, portable, rechargeable energy storage and power supply device is shown that provides a reconfigurable platform, which can be customized for use in a wide variety of applications by interchangeably connecting various adapters and/or accessories, according to various exemplary embodiments. The modular, portable, rechargeable energy storage and power supply device provides an electrical output at multiple voltage levels to support a wide variety of adapters and accessories that operate at different voltages, through the use of a concentric pin configuration that provides a "smart" device that recognizes the required voltage level of the adapter or accessory through mating contacts (e.g. rings, etc.) that engage the appropriate concentrically-positioned contacts. The applications include recharging applications for recharging other devices by connecting to the energy storage and power supply device an adapter having the appropriate hardware to engage the device to be recharged. The hardware on the adapter may be selectively deployable between a stowed position and an engagement position (e.g. by folding into a compartment in the adapter or the like). The adapters for use with the energy storage and power supply device may also be configured as couplers to connect multiple energy storage and power supply devices to one another, e.g. in a series or parallel configuration to provide increased voltage or capacity. The applications also include coupling or a wide variety of accessories intended to be powered directly and primarily by the energy storage and power supply device. The accessories may be connected directly to the energy storage and power supply device, or indirectly through one or more adapters, and may include (among others) lighting devices (e.g. LED lights, flashlights, lanterns, etc.), medical devices, GPS devices, camping and/or expeditioning equipment, tools, wireless communication devices and other portable accessories that may be interchangeably coupled to the energy storage and power supply device. The adapters and accessories may also be combined in a variety of 'hybrid' configurations, such as adapters having multiple parallel output connections for receiving multiple accessories and/or further adapters (e.g. in the manner of a splitter or the like). Although only a few embodiments are shown and described herein, the disclosure includes an energy storage and power supply device having a core portion with a rechargeable battery contained therein, and mechanical connecting structure and a smart electrical contact configuration on each end that provides a platform configured to interchangeably receive a wide array of adapters and accessories for customizing the device for use in a wide variety of applications.

Referring further to the figures, devices and methods for charging rechargeable energy storage devices, such as one or more batteries (e.g., lithium ion, NiMH, etc.), and/or for charging electrical and/or electronic devices are shown and described according to various exemplary embodiments. The charging device may be connected to an external energy source, such as an electrical outlet (e.g., a 110 volt outlet connected to the device through a transformer that transforms the electrical signal to a lower voltage) or a computer (e.g., through a Universal Serial Bus, or USB, connector or other type of connector) that provides the power to charge a battery of the charging device. In some embodiments, the charging device may be configured to receive electrical power for charging the batteries from a solar panel (e.g., a mobile solar panel).

In some embodiments, the charging device may be configured to provide power to various devices using different modular adapters or ports. For example, the charging device may be configured to allow different modular adapters to be coupled and decoupled from a base of the charging device to allow connection of various devices using various different types of connections, such as USB, mini or micro-USB, and/or various types of proprietary connections for the various

devices. In some embodiments, various types of devices other than connectors may additionally or alternatively be coupled to the base of the charging device, such as a flashlight or lantern.

In some embodiments, the modular adapters of the charging device may be rigid or semi-rigid structures. Such modular adapters may be coupled to the base so that the entire charging device, including the base and the modular adapters, may combine to be a rigid or semi-rigid structure. Such embodiments may help make the charging device more mobile-friendly, as a user may pre-plan the modular adapters that he or she plans to use, attach those modular adapters to the base, and pack only the charging device (e.g., as compared to a charging device that uses external wire-based adapters to connect devices, where the wires must be packed along with the base unit). In some embodiments, the charging device may include external adapters (e.g., wire-based adapters) to connect to some devices. In some embodiments, the modular adapters may be cap-like devices that secure to one or more ends of a base of the charging device (e.g., via threads on the base and the modular adapters). In some embodiments, multiple charging devices may be chained together to increase the total charging capacity.

In some embodiments, the base of the charging device may connect to the modular adapters using an array of contacts. Different contacts may be configured to receive or provide power at various different voltages (e.g., 3.7V, 5V, etc.). In some embodiments, the charging device may have a cylindrical shape and the contacts may be arranged at ends of the charging device on different concentric circles in a "bulls-eye" pattern. In one exemplary embodiment, one contact of an exemplary base unit may be located in the center of the end and configured to receive/provide power at a first voltage level, two contacts may be located on a first concentric circle and configured to receive/provide power at a second voltage level, and two contacts may be located on a second concentric circle and configured to receive/provide a ground reference. Providing multiple contacts associated with the same voltage level may enable the charging device to increase the maximum current flow into or out of the charging device at that voltage level. Providing input and/or output contacts at different voltage levels allows the charging device to receive input power from and/or provide output power to a variety of input/output devices that may be configured to operate using different voltage levels (e.g., a first device may be configured to receive power at 3.7V, a second device may be configured to receive power at 5V, etc.).

Referring now to FIG. **1**, an illustrative view of a charging device **100** is shown according to an exemplary embodiment. Charging device **100** is configured to provide power to charge and/or operate various electrical and/or electronic devices, such as mobile computing devices, cellular phones, gaming devices, computers, etc. Charging device **100** includes a rechargeable battery (e.g., lithium ion, NiMH, etc.) or other energy storage device that may be charged using an input power source such as a electrical socket or a computer (e.g., via Universal Serial Bus, or USB). In some exemplary embodiments, the battery may be a "smart" battery configured to automatically turn on or off and/or automatically charge and/or discharge based on various battery characteristics (e.g., charge level, idle time, etc.). In one exemplary embodiment, the battery may be a 3.7V, 2.2 Ah lithium battery with a storage capacity of 8.14 Wh. The accumulated charge within the rechargeable battery may be used to provide power to the various devices connected to one or more outputs of charging device **100**.

Charging device **100** includes a base **105** that includes the rechargeable battery. Base **105** may also include other circuitry, such as voltage regulation circuitry configured to convert input and/or output power from one voltage to another. For example, base **105** may include a lithium ion battery configured to charge and discharge at 3.7V (in various embodiments, this voltage may differ). In some embodiments, input power for charging the battery may be received at different voltages, such as 5V (e.g., from a USB port), 6.5V (e.g., from an solar input device), etc. Base **105** may include a voltage regulation circuit configured to convert the voltage of the input power signal from the original input voltage to 3.7V. In some embodiments, output power may be provided to devices at a different voltage than 3.7V, and a voltage regulation circuit of base **105** may be configured to convert the output power from 3.7V to the desired output voltage. As described in greater detail below, in some embodiments, base **105** may be configured to provide output power and/or receive input power at multiple different voltages (e.g., 3.7V and 5V), such that various input and/or output devices can provide or receive power at different voltage levels. In some embodiments, base **105** may include an elongated, substantially cylindrical housing **130**, and input/output contacts may be provided at ends **125**, **135** of base **105**.

Charging device **100** may be configured to receive input power from various devices and/or provide output power to various devices using different modular adapters. In the illustrated exemplary embodiment, charging device **100** includes a first modular adapter **110** configured to provide a male USB interface **140** for use in interfacing with various USB power input/output (I/O) devices. Adapter **110** is configured to be mechanically coupled to base **105** by twisting a threaded portion **150** of adapter **110** onto a corresponding threaded portion of base **105** at end **135** until adapter **110** is in solid contact with end **135**. As adapter **110** and base **105** are properly mechanically mated, contacts **155** of adapter **110** (e.g., male contacts, electrodes, ports, etc.) are moved into contact with corresponding contacts of base **105** proximate to end **135**, electrically coupling adapter **110** to base **105**. In the illustrated exemplary embodiment, male USB interface **140** of adapter **110** is configured to flip up for use and flip down for travel or storage using a hinge **145**, which may help avoid damaging the male USB connector when not in use.

Charging device **100** may include a second modular adapter **115** configured to provide a female USB interface **160** for use in interfacing with USB power I/O devices. In some embodiments, adapter **115** may include a male threaded portion similar to adapter **110** and connect to base **105** in substantially the same manner. In the illustrated exemplary embodiment, adapter **115** includes a female threaded portion and female electrical contacts proximate to inner end **165** of adapter **115** (not visible in FIG. **1**), and base **105** includes a female threaded portion and female contacts proximate to end **125** of base **105**. A male-male coupler **120** may be used to mechanically and electrically couple adapter **115** to base **105**. Coupler **120** includes a male threaded portion **185** configured to mechanically connect coupler **120** to adapter **115** and male contacts **175** configured to electrically connect coupler **120** to adapter **115**. Coupler **120** includes a male threaded portion **180** configured to mechanically connect coupler **120** to end **125** of base **105** and male contacts **170** configured to electrically connect coupler **120** to base **105**.

Charging device **100** may be configured to receive input power and/or provide output power from or to various devices using modular adapters such as adapters **110** and/or **115**. In some embodiments, adapter **110** having male USB interface **140** may be used to receive input power to charge the energy

storage device of charging device **100** (e.g., via a transformer plugged into a 110V wall socket or 12V auto socket, a USB port of a computing device, etc.), and adapter **115** having female USB interface **160** may be configured to provide output power to devices connected to interface **160** (e.g., devices configured to connect to female USB ports). In some embodiments, charging device **100** may be configured such that the polarity may be reversed (e.g., permanently, temporarily, selectively, etc.) for one or both of interfaces **110** and/or **115**, such that adapter **110** may be configured to provide output power and/or adapter **115** is configured to receive input power. In some implementations, adapters **110**, **115** and/or base **105** may include circuitry configured to detect whether a power source or a load is connected to adapters **110** and/or **115** and to receive input power and/or provide output power accordingly. In various embodiments, one adapter may be configured to receive input power and the other adapter may be configured to provide output power, both adapters may be configured to receive input power, both adapters may be configured to provide output power, etc. In various embodiments, charging device **100** may include more than two adapter interfaces. In some embodiments, charging device **100** may include a single adapter interface and may provide a method (e.g., a selector switch, circuitry configured to sense polarity, etc.) to configure the adapter interface as an input or output interface based on the connected modular adapter and/or connected power source or load.

In various embodiments, charging device **100** may be used with a variety of different modular adapters configured to connect charging device **100** to different devices. For example, modular adapters may be provided for providing male and/or female connectors of various types, such as USB, mini-USB, micro-USB, firewire, proprietary connectors associated with different devices, etc. In various embodiments, various different types of modular adapters providing various different interfaces may be used with charging device **100**. In some embodiments, modular adapters may include devices or accessories themselves rather than or in addition to providing interfaces for connecting charging device **100** to other devices. For example, the modular adapters may include flashlights or lanterns that can be connected to base **105** to provide a light source. In various exemplary embodiments, the modular adapters may include lights, flashlights, lanterns, strobes, emergency indicators or alarms, fans, magnets, hooks, tripods, stands, rings, toothbrushes, phone charging tips, electronics charging tips, straps, heaters, hand warmers, monitors (e.g., health monitors), tools, shavers, chaining adapters to connect multiple charging devices in parallel and/or series, speakers, and/or any other types of adapters and/or accessories.

In some embodiments, one or more of the modular adapters may include input/output interfaces that are rigid or semi-rigid structures within the modular adapters, such that, when the modular adapters are coupled to base **105**, charging device **100**, including one or more interfaces needed to connect to devices, is a single rigid or semi-rigid structure. In one embodiment, base **105** has a cylindrical housing and the modular adapters are cylindrical cap-shaped structures configured to be mated to base **105**. In other embodiments, base **105** and/or the modular adapters may include different shapes and/or structures. In various embodiments, base **105**, modular adapters **110**, **115**, coupler **120**, and/or other components of charging device **100** may include metal (aluminum), plastic, and/or other types of materials.

In the illustrated exemplary embodiment, adapters **110**, **115** are mechanically coupled to base **105** using male and female threaded portions configured to mate to one another. In other exemplary embodiments, different methods of mating modular adapters to a base may be used, such as guide-pins, latches (e.g., quarter-turn mating latches), magnets, or any other method of mechanically mating the modular adapters to the base.

Referring now to FIG. **2**A, an illustrative view of an end (e.g., end **125** and/or **135**) of base **105** of charging device **100** is shown according to an exemplary embodiment. In the illustrated exemplary embodiment, each end of base **105** includes several output contacts or terminals to which modular adapters can be connected to receive or provide power at various voltages. A first contact **210** may be configured to receive or provide power at a first voltage. For example, first contact **210** may be configured to receive or provide power at approximately 5V (e.g., for connection to USB modular adapters). A second set of contacts **215** may be configured to receive or provide power at a second voltage. For example, contacts **215** may receive or provide power at 3.7V (e.g., for use with a lantern adapter). A third set of contacts **220** may be configured to receive or provide a ground reference. In some embodiments, one or more contacts may be associated with a native, unregulated voltage of the energy storage device of charging adapter **100**. In some embodiments, one or more contacts may be associated with a voltage that is higher or lower than the native voltage of the energy storage device, and charging device **100** may include one or more regulation circuits configured to upconvert or downconvert the voltage to or from the native voltage of the energy storage device. Ends **125**, **135** of base **105** include threaded portion **205** configured to mechanically mate base **105** to the modular adapters. In some implementations, threaded portion **205** may also electrically couple base **105** to the modular adapters (e.g., as a grounding interface between threaded portion **205** and threads of the modular adapters).

In the illustrated exemplary embodiment, ends **125**, **135** include sets of paired contacts **215** and **220**. In some embodiments, one or more modular adapters connected to base **105** may include contacts configured to electrically couple the modular adapters to both contacts in a set (e.g., both contacts **215**). Connecting a modular adapter to both contacts may allow for a higher current to be provided through the modular adapter, which may enable faster charging of connected devices. In one exemplary embodiment, a current throughput of up to approximately 1 A or 1.5 A may be achieved through contact **210**, and a current throughput of up to approximately 4 A may be achieved through contacts **215**. In some embodiments, one or more modular adapters may connect to only one of the contacts **215**. Various types of modular connectors may be provided having contacts configured to electrically couple the modular adapters to different contacts of base **105**. For example, a USB adapter may include contacts that couple to first contact **210** (e.g., 5V) and third contacts **220** (e.g., ground) and a lantern adapter may include contacts that couple to second contacts **215** (e.g., 3.7V) and third contacts **220** (e.g., ground).

In the illustrated exemplary embodiment, paired contacts are arranged in a "bulls-eye" pattern on concentric circles. First contact **210** is provided in the center of ends **125**, **135** and is not paired with another contact. Two paired second contacts **215** are located on the same concentric circle (i.e., approximately the same distance from the center contact **210**) and are located opposite one another. Two paired third contacts **220** are located on the same larger concentric circle (e.g., a greater distance away from center contact **210** than contacts **215**) and are located opposite one another. In various alternative embodiments, multiple output contacts may be provided that may not be organized in this "bulls-eye" pattern.

FIG. **2**B provides an illustrative view of an end of an adapter **250** according to an exemplary embodiment. The illustrated end may be configured to electrically couple adapter **250** to a charging device. In the illustrated embodiment, adapter **250** includes several conductive zones (e.g., female contacts) that are configured to mate with corresponding prongs (e.g., male contacts) of a charging device. One of more of the zones may be concentric rings located around a center point of a cross-section of the adapter end. In one embodiment, adapter **250** may be configured to mate with end **125**, **135** of body **105** as illustrated in FIG. **2**A. Adapter **250** may include a first contact **255** located in the center of the end of adapter **250** and configured to mate with a center prong of the body of the charging device (e.g., contact **210**). First contact **255** may be configured to transmit power at a first voltage (e.g., 5V). A second contact **260** may include a ring-shaped region surrounding first contact **255** and may be configured to mate with corresponding prongs of the body (e.g., contacts **215**). Second contact **260** may be configured to transmit power at a second voltage (e.g., 3.7V). A third contact **265** may include a ring-shaped region surrounding both first contact **255** and second contact **260** and may be configured to mate with corresponding prongs of the body (e.g., contacts **220**). Third contact **265** may be configured to provide a grounding interface between adapter **250** and the body of the charging device. In various exemplary embodiments, adapter **250** and/or the body may be configured to include any number of different pairs of corresponding contacts (e.g., two, three, four, five, etc.), each of which may be configured to transmit power at the same or different voltage and/or current levels than other contacts. Buffer regions **270** may include non-conductive, or insulative, material configured to electrically isolate contacts **255**, **260**, and **265** from one another.

FIG. **2**C provides an illustrative view of a contact arrangement **275** or interface between a body of a charging device and an adapter according to an exemplary embodiment. Male contacts (e.g., prongs) and/or female contacts (e.g., rings, recesses, etc.) may be provided as part of the body, the adapter, or both. In some exemplary embodiments, the adapter includes a female interface including several concentric circular or ring-shaped regions, and the body includes a male interface having several corresponding prongs or male contacts. One or more sets of two or more prongs may be included on the male interface, and the prongs in each set may be positioned equidistant from a center of the interface (e.g., in a "bulls-eye" configuration). In some embodiments, the sets of prongs may be positioned in a manner to increase the distance between contacts on the interface. For example, in the illustrated exemplary embodiment, male contacts corresponding to a region are offset by approximately sixty degrees in the circumferential direction from corresponding contacts in adjacent regions.

In the illustrated exemplary embodiment of FIG. **2**C, a first female contact **280** of the adapter is configured to mate with a first male contact **282** of the charging device body. The charging device may be configured to provide and/or receive power at a first voltage (e.g., approximately 5V) through the connection between contacts **280** and **282**. A second female contact **284** of the adapter is configured to mate with two second male contacts **286** of the body, and the charging device may be configured to provide and/or receive power at a second voltage (e.g., approximately 3.7V) through the connection between contacts **284** and **286**. A third female contact **288** of the adapter is configured to mate with two third male contacts **290** of the body. A fourth female contact **292** of the adapter is configured to mate with two fourth male contacts **294** of the body to provide a grounding interface.

In some embodiments, the third contacts and/or any other contacts may be used to provide an "always on" input interface for receiving input power to charge a battery of the charging device. For example, in some embodiments, an on/off switch may be configured to disable the flow of power into and out of the battery to avoid draining the battery (e.g., through a 5V regulator and/or other circuitry) when not in use. An input connection (e.g., a 3.7V input) may be provided that remains connected to a charging circuit of the charging device and able to charge the battery even if a main power switch is in the "off" position and disabling flow through the other contacts. In some embodiments, various adapters may be configured to use or not use this "always on" interface (e.g., some adapters may not include pins configured to contact third female interface **288**). In some embodiments, special adapters (e.g., a motion sensor adapter) may be provided to use this interface as an output interface to receive power from the battery and function even if the on/off switch is in an "off" position.

FIGS. **3**A and **3**B show various illustrative views of body **105** of charging device **100** without modular adapters attached according to exemplary embodiments. FIGS. **3**A and **3**B illustrate in further detail what the threaded portions and contacts proximate to ends **125** and **135** of body **105** may look like according to exemplary embodiments.

FIG. **4** provides an illustrative view of charging device **100** with adapter **115** attached to body **105** and adapter **110** illustrated but detached from body **105** according to an exemplary embodiment. FIG. **4** illustrates the male threaded portion of adapter **110** that is designed to mate with a corresponding female threaded portion of body **105** proximate to end **135**.

FIGS. **5**A through **5**C provide illustrative views of charging device **100** as it may appear after adapter **110** is securely mated with body **105** according to an exemplary embodiment. FIG. **5**A provides a view of the end of adapter **110** with male USB interface **140** in an upright position and ready for connection to a female USB port (e.g., for charging an energy storage device of charging device **100**). FIG. **5**B provides a view of the end of adapter **115** showing a female USB interface **505** (e.g., for providing power to connected devices). FIG. **5**C provides a side view of charging device **100** illustrating a hinge **145** of adapter **110** used in moving male USB interface **140** between a closed or flipped-down and open or flipped-up configuration. In various exemplary embodiments, other types of interfaces may additionally or alternatively be provided using hinged and/or extendable methods.

Referring now to FIGS. **6**A and **6**B, illustrative views of a charging system **600** including two separate charging devices **605**, **610** coupled to one another are shown according to exemplary embodiments. Referring specifically to FIG. **6**A, charging system **600** includes a first charging device **605** and a second charging device **610**. In some embodiments, one or both of charging devices **605** and **610** may be substantially similar to charging device **100** and/or include similar features to those described with respect to charging device **100**. Each of charging devices **605** and **610** includes an energy storage device such as a rechargeable battery. Each of charging devices **605** and **610** includes ends configured to be mated to modular adapters for receiving input power and/or providing output power. In the illustrated exemplary embodiment, charging device **605** is coupled to a modular adapter **620** having a male USB interface **625**. Charging device **610** is coupled to a modular adapter **630** having a female interface **630** that is in turn configured to be mechanically and/or electrically coupled to a plurality of device adapters **635** for

connecting to various devices. In various embodiments, female interface **630** and/or device adapters **635** may include USB, mini-USB, micro-USB, firewire, various proprietary interfaces, or any other type of interface.

Charging devices **605** and **610** are coupled to one another (e.g., mechanically and electrically) by a coupling adapter **615**. Coupling adapter **615** may be configured to mechanically mate charging devices **605** and **610** so that the combined charging system **600** forms a substantially rigid structure. Coupling adapter **615** may be configured to electrically connect charging devices **605** and **610** such that the stored capacity of the energy storage devices of charging devices **605** and **610** is combined (e.g., in a series or parallel configuration). Chaining or coupling the energy storage devices of charging devices **605** and **610** may provide a greater stored energy capacity for use in charging connected devices (e.g., up to double the energy capacity of a single charging device). In various embodiments, charging devices **605** and **610** may be substantially the same types of devices (e.g., having the same energy storage capacities) or may be different devices (e.g., having different energy storage capacities).

FIG. **6**B illustrates charging system **600** in an uncoupled configuration in which more detail of exemplary coupling adapter **615** is visible. Coupling adapter **615** includes male threaded portions on each side of coupling adapter **615** for mechanically coupling adapter **615** to corresponding female threaded portions of charging devices **605** and **610**. Coupling adapter **615** may include electrical contacts (e.g., male electrical contacts) configured to be electrically mated with corresponding electrical contacts (e.g., female electrical contacts) of charging devices **605** and **610**, such that energy storage devices of charging devices **605** and **610** are electrically coupled to one another (e.g., in a series configuration). In various alternative embodiments, different types of mechanical and/or electrical mating structures may be utilized.

Referring now to FIGS. **7**A-**7**D, a circuit diagram of a circuit **700** of a charging device (e.g., charging devices **100**, **605**, and/or **610**) is shown according to an exemplary embodiment. Microcontroller circuit **705** includes a microcontroller configured to control the flow of electrical current into and/or out of the battery. Power measurement circuit **710** includes various components used to receive and/or measure various properties (e.g., voltage, current, etc.) of the electrical power signals flowing into and out of the charging device. Power output circuit **715** is configured to receive power at a voltage associated with the battery (e.g., approximately 3.7V) and convert the voltage to a voltage appropriate for an output interface, such as USB (e.g., approximately 5V). Power input circuit **720** is configured to receive power from an external device (e.g., via USB) at a first voltage (e.g., approximately 5V) and convert the voltage to a second voltage (e.g., approximately 3.7V) suitable for charging the battery. While FIGS. **7**A-**7**D illustrate various specific part numbers and/or properties (e.g., resistance, capacitance, voltage, current, etc.) of various components in circuit **700**, it should be understood that in various exemplary embodiments other parts and/or properties may be utilized in the circuit of the charging device.

According to various exemplary embodiments, various different types of modular adapters may be coupled to the charging devices and/or systems disclosed herein. FIG. **8** illustrates a charging device **800** having a lantern adapter **810** according to an exemplary embodiment. Lantern adapter **810** may be configured to illuminate to provide light for use at night or in a dark space (e.g., similar in function to a flashlight or lantern). In some embodiments, lantern adapter **810** may be configured to be electrically connected to multiple electrical contacts of charging device **800** to increase a maximum current output to lantern adapter **810** and a corresponding maximum illumination of lantern adapter **810**. In various exemplary embodiments, various different types of devices may be adapted for inclusion within or attachment to modular adapters of the charging devices. One exemplary adapter may be configured to serialize outputs from multiple contacts of the charging device to provide double the output voltage for certain applications (e.g., serialize two 3.7V outputs to provide a 7.4V output). One exemplary adapter may be configured to provide a variable voltage (e.g., 3.7V to 7.4V) that may be changed by a user, for example, using a dial. Various other types of adapters may be provided for use with the charging devices according to various exemplary embodiments.

According to various exemplary embodiments, a modular, portable, rechargeable energy storage and power supply device is shown that provides a reconfigurable platform, which can be customized for use in a wide variety of applications by interchangeably connecting various adapters and/or accessories. The modular, portable, rechargeable energy storage and power supply device provides a smart electrical contact system having concentric pins and rings operating at different voltage levels to support a wide variety of adapters and accessories that operate at different voltages. The applications include recharging applications for recharging other devices by connecting an adapter having the appropriate hardware to engage the device to be recharged. The hardware on the adapter may be selectively deployable between a stowed position and an engagement position (e.g. by folding into a compartment in the adapter or the like). The adapters for use with the energy storage and power supply device may also be configured as couplers to connect multiple energy storage and power supply devices to one another, e.g. in a series or parallel configuration to provide increased voltage or capacity. The applications also include coupling of a wide variety of accessories intended to be powered directly and primarily by the energy storage and power supply device. The accessories may be connected directly to the energy storage and power supply device, or indirectly through one or more adapters, and may include (among others) lighting devices (e.g. LED lights, flashlights, lanterns, etc.), medical devices, GPS devices, camping and/or expeditioning equipment, tools, wireless communication devices and other portable accessories that may be interchangeably coupled to the energy storage and power supply device. The adapters and accessories may also be combined in a variety of 'hybrid' configurations, such as adapters having multiple parallel output connections for receiving multiple accessories and/or further adapters (e.g. in the manner of a splitter or the like).

Referring now to FIG. **9**, an illustrative view of an end of a charging device **900** is shown according to an exemplary embodiment. Charging device **900** may operate in a similar fashion and/or include similar features to charging devices **100**, **605**, and/or **610** described above with respect to FIGS. **1**-**7**.

Charging device **900** includes several contacts through which device **900** may transmit signals (e.g., power and/or data signals) between device **900** and modular adapters configured to mate with device **900**. In the illustrated exemplary embodiment, first contacts **905** may be configured to transmit ground or negative reference voltage signals, second contacts **910** may be configured to transmit a first positive voltage signal (e.g., +5V), and third contacts **915** may be configured to transmit a second positive voltage signal (e.g., +3.7V). A fourth contact **920** may be configured to transmit data signals

between device **900** and connected modular adapters. For example, in some embodiments, a charging circuit may be partially or completely housed in a modular charging adapter, and information regarding the charge level of a battery of device **900** may be transmitted to device **900** from the modular adapter. Such information may be displayed to a user using a visual indicator. In the illustrated embodiment, light emitting diodes (LEDs) **925** are used to indicate a charge level of the battery. For example, if the battery is charged to 60% of a maximum state of charge, two of LEDs **925** may be lit solid and a third may be blinking, indicating that the battery is charged to at least 50% and is in the process of being charged. It should be appreciated that the pin configuration and signals transmitted on certain pins may be different in different embodiments, and all such embodiments are contemplated by the present disclosure.

Referring now to FIG. **10**, cutaway perspective views of a modular adapter **1000** for use with charging device **900** are shown according to an exemplary embodiment. Adapter **1000** may be used to transmit power between charging device **900** and a device attached to adapter **1000**. Adapter **1000** or a similar adapter could additionally or alternatively be utilized with charging devices such as devices **100**, **605**, and/or **610**. Adapter **1000** includes an interface **1005** for connecting with other devices (e.g., devices for supplying and/or receiving power), a body **1010**, and a base **1080**. In the illustrated embodiment, adapter **1000** includes an interface **1005** that includes a male USB port. In other embodiments, interface **1005** may include any other type of standard interface (e.g., mini-USB, micro-USB, Firewire, etc.) and/or proprietary interface (e.g., Apple 30-pin connector, Lightning connector, Thunderbolt connector, etc.). Adapter **1000** is configured such that interface **1005** can be flipped up during use (e.g., charging) and flipped down for storage to protect interface **1005** from being damaged.

Adapter **1000** is configured to transmit power between at least two of a plurality of conductors **1060** of interface **1005** and contacts of charging device **900**. For example, in the illustrated embodiment, the USB interface includes a +5V power pin, a ground power pin, a positive data pin, and a negative data pin. Adapter **1000** includes a conductive sheath **1020** or envelope into which a conductive pin **1030** is placed. Sheath **1020** may be a cylindrical tube, an enclosure with a rectangular cross-section, or may have any other shape. Conductive sheath **1020** is electrically connected to the ground power pin of the USB connector of interface **1005** and to conductive pin **1030**. Conductive pin **1030** is pressed against a conductive post **1050** (e.g., a rigid post). In the illustrated embodiment, a spring **1025** is used to press pin **1030** into consistent contact with post **1050**. This may help with both the mechanical stability of the connection between pin **1030** and post **1050** as well as the consistency of the electrical connection between pin **1030** and post **1050**. In some embodiments, spring **1025** may be made of a conductive material (e.g., copper) and may increase the electrical conductivity between sheath **1020** and pin **1030**. Post **1050** is connected to negative or ground contact on a base **1080** of adapter **1000** that is configured to connect with first contacts **905** (e.g., ground contacts) of charging device **900** when adapter **1000** is mated with device **900**. Together, sheath **1020**, spring **1025**, pin **1030**, post **1050**, and base **1080** provide a conductive path between the ground pin of interface **1005** and first contacts **905** (e.g., ground contacts) of charging device **900**. A conductive sheath **1035**, spring **1040** (e.g., a conductive spring), conductive pin **1045**, conductive post **1055**, and base **1080** similarly provide a conductive path between a positive power pin (e.g., +5V pin) of interface **1005**, which is electrically connected to sheath **1035**, and second contacts **910** of device **900**, which are configured to be connected to a positive power contact of base **1080** to which post **1055** is connected. In some embodiments, springs **1025** and/or **1040** may be removed or replaced with another conductive or nonconductive element designed to press pins **1030** and **1045** into consistent contact with posts **1050** and **1055**, such as a compressible material (e.g., rubber), a curved washer, etc.

Pins **1030** and **1045** and posts **1050** and **1055** also provide a mechanical structure that enables interface **1005** to pivot about an axis defined by pins **1030** and **1045**. Interface **1005** can be swiveled and placed into a use position (e.g., a vertical position) when interface **1005** is going to be connected to a device and into a storage position (e.g., a horizontal position) when interface **1005** is not in use. A swivel track **1095** and protrusion **1098** may help ensure that interface **1005** swivels only about the axis and does not shift during pivoting. A base portion of interface **1005** may include one or more recesses **1085** into which a stop member **1065** may be pressed. Stop member **1065** extends out of a stop member sheath **1075** mounted to base **1080** and is pressed against interface **1005** by a spring **1070** or other compressible element. When interface **1005** is rotated to a position at which stop member **1065** extends into a recess **1085**, stop member **1065** may provide resistance that tends to cause interface **1005** to remain in that position until sufficient force is applied to interface **1005** to cause stop member **1065** to withdraw from recess **1085** and allow interface **1005** to rotate.

In some embodiments, body **1010** may include slots **1090** through which an object (e.g., a pin or paperclip) may be extended to push pins **1030** and **1045** back into sheaths **1020** and **1035**. This may allow a user to disengage and/or remove interface **1005** from adapter **1000**. In some embodiments, slots **1090** may be used to remove interface **1005** to make repairs to or replace interface **1005** or other components of adapter **1000**. In some embodiments, a plurality of different types of interfaces may be configured to be used with adapter **1000** (e.g., a USB interface, a mini-USB interface, a micro-USB interface, a Firewire interface, proprietary interfaces, etc.), and slots **1090** may be used to swap the current interface with a different interface.

FIGS. **11** through **19** provide various additional views (e.g., perspective and/or cutaway views) of components of adapter **1000** shown and described with respect to FIG. **10**. Referring specifically to FIG. **13**, contacts on base **1080** configured to connect with corresponding contacts of device **900** when adapter **1000** is mated to device **900** are shown. First contact **1305** may be a ground contact electrically connected to post **1050** (e.g., the negative or ground post) and configured to be connected to first contacts **905** (e.g,. ground contacts) of charging device **900** to provide a conductive path between a ground pin of interface **1005** and first contacts **905** of device **900**. Second contact **1310** may be a positive power contact electrically connected to post **1055** (e.g., the positive power post) and configured to be connected to second contacts **910** (e.g,. +5V contacts) of charging device **900** to provide a conductive path between a positive power pin of interface **1005** and second contacts **910** of device **900**. In some embodiments, a third contact **1315** and/or fourth contact **1320** may be configured to transmit power at a different voltage (e.g., +3.7V), data from a circuit embedded in adapter **1000**, and/or data from data pins of interface **1005**. FIG. **14** illustrates a base housing **1400** of interface **1005** having a rear recess **1405** into which stop member **1065** may extend to hold interface **1005** in an use or vertical configuration. FIG. **17** provides a view of interface **1005** and base **1080** without posts **1050** and

1055 in which an outer end of pin 1030 can be seen according to one exemplary embodiment.

Referring now to FIG. 20A, an illustration of input/output interfaces of a charging device 2002 and a modular adapter 2004 are shown according to an exemplary embodiment. Charging device 2002 and modular adapter 2004 may include similar features and/or characteristics to the charging devices and modular adapters described above. Charging device 2002 includes an input-output interface with ground pins 2005, 3.7V pins 2010, 5V pins 2015, and a data pin 2020. The input-output interface of device 2002 is configured to electrically mate with a corresponding input/output interface of modular adapter 2004, which includes a ground contact 2025, 3.7V contact 2030, 5V contact 2035, and data contact 2040. In the illustrated embodiment, 5V may be the native input/output voltage of devices connected to an interface of adapter 2004 and 3.7V may be a raw cell voltage of a battery cell of device 2002. In other embodiments, the native input/output voltage associated with the interface of adapter 2002 and/or the raw cell voltage of the battery cell of device 2002 may include different values.

In some embodiments, charging device 2002 and modular adapter 2004 may be configured such that 5V input power received by an external interface of adapter 2004 is regulated or converted to the raw cell voltage of 3.7V inside adapter 2004 before being transmitted to device 2002. Referring to FIG. 20B, a block diagram of an electrical circuit 2050 formed by charging device 2002 and modular adapter 2004 is shown according to an exemplary embodiment. Adapter 2004 includes a charging circuit 2065 that is configured to convert input signals at one voltage into output signals having a different voltage. For example, in the illustrated embodiment, charging circuit 2065 is configured to receive input power for charging a battery cell 2076 of device 2002 from an external device through a USB interface at a voltage of 5V. Charging circuit 2065 is configured to convert the power signal to the raw voltage of cell 2076, 3.7V, and output the converted power signal over 3.7V contact 2030. The converted power signal is received at 3.7V pins 2010 of charging device 2002 and used to charge cell 2076. A charging indicator signal (e.g., a digital signal) may be transmitted from charging circuit 2065 through data contact 2040 to data pin 2020 and then to a controller 2070. The charging indicator signal may indicate to controller 2070 when input power is being received and the battery is being charged. Controller 2070 may use this data (e.g., along with a current charge level of cell 2076) to illuminate LEDs 2074 or other visual indicators to notify a user of the current charge status and/or charge level of cell 2076. Data pin 2020 and data contact 2040 may serve as a one-wire data bus between controller 2070 and charging circuit 2065 of adapter 2004. In some embodiments, the bus may support multiple addressed slave devices with controller 2070 serving as the master device. In some embodiments, power may be output from cell 2076 at 3.7V, upconverted to 5V by charging circuit 2065 of adapter 2004, and output through the USB interface to power an external device. A 5V regulator circuit 2072 may be used to upconvert voltage from 3.7V to 5V to output power to attached external devices from cell 2076.

The disclosure is described above with reference to drawings. These drawings illustrate certain details of specific embodiments that implement the systems and methods and programs of the present disclosure. However, describing the disclosure with drawings should not be construed as imposing on the disclosure any limitations that may be present in the drawings. The present disclosure contemplates methods, systems and/or program products on any machine-readable media for accomplishing its operations. The embodiments of the present disclosure may be implemented using an existing computer processor, or by a special purpose computer processor incorporated for this or another purpose or by a hard-wired system. Any type of processor may be used (e.g., FPGA, ASIC, ASIP, CPLD, SDS, etc.). No claim element herein is to be construed under the provisions of 35 U.S.C. §112, sixth paragraph, unless the element is expressly recited using the phrase "means for." Furthermore, no element, component or method step in the present disclosure is intended to be dedicated to the public, regardless of whether the element, component or method step is explicitly recited in the claims.

As noted above, embodiments within the scope of the present disclosure may include program products including machine-readable media for carrying or having machine-executable instructions or data structures stored thereon. Such machine-readable media can be any available media which can be accessed by a general purpose or special purpose computer or other machine with a processor. By way of example, such machine-readable media can comprise RAM, ROM, EPROM, EEPROM, CD ROM or other optical disk storage, magnetic disk storage or other magnetic storage devices, or any other medium (e.g., non-transitory medium) which can be used to carry or store desired program code in the form of machine-executable instructions or data structures and which can be accessed by a general purpose or special purpose computer or other machine with a processor. Combinations of the above are also included within the scope of machine-readable media. Machine-executable instructions comprise, for example, instructions and data which cause a general purpose computer, special purpose computer, or special purpose processing machine to perform a certain function or group of functions.

Embodiments of the disclosure may be described in the general context of method steps which may be implemented in one embodiment by a program product including machine-executable instructions, such as program code, for example, in the form of program modules executed by machines in networked environments. Generally, program modules include routines, programs, objects, components, data structures, etc., that perform particular tasks or implement particular abstract data types. Machine-executable instructions, associated data structures, and program modules represent examples of program code for executing steps of the methods disclosed herein. The particular sequence of such executable instructions or associated data structures represent examples of corresponding acts for implementing the functions described in such steps.

An exemplary system for implementing the overall system or portions of the disclosure might include a general purpose computing device in the form of a computer, including a processing unit, a system memory, and a system bus that couples various system components including the system memory to the processing unit. The system memory may include read only memory (ROM) and random access memory (RAM). The computer may also include a magnetic hard disk drive for reading from and writing to a magnetic hard disk, a magnetic disk drive for reading from or writing to a removable magnetic disk, and an optical disk drive for reading from or writing to a removable optical disk such as a CD ROM or other optical media. The drives and their associated machine-readable media provide nonvolatile storage of machine-executable instructions, data structures, program modules, and other data for the computer.

It should be noted that although the flowcharts provided herein show a specific order of method steps, it is understood that the order of these steps may differ from what is depicted.

Also, two or more steps may be performed concurrently or with partial concurrence. Such variation will depend on the software and hardware systems chosen and on designer choice. It is understood that all such variations are within the scope of the disclosure. Likewise, software and web implementations of the present disclosure could be accomplished with standard programming techniques with rule based logic and other logic to accomplish the various database searching steps, correlation steps, comparison steps and decision steps. It should also be noted that the word "component" as used herein and in the claims is intended to encompass implementations using one or more lines of software code, and/or hardware implementations, and/or equipment for receiving manual inputs.

The foregoing description of embodiments of the disclosure have been presented for purposes of illustration and description. It is not intended to be exhaustive or to limit the disclosure to the precise form disclosed, and modifications and variations are possible in light of the above teachings or may be acquired from practice of the disclosure. The embodiments were chosen and described in order to explain the principals of the disclosure and its practical application to enable one skilled in the art to utilize the disclosure in various embodiments and with various modifications as are suited to the particular use contemplated.

What is claimed is:

1. A charging device comprising:

a body comprising a rechargeable energy storage device and a housing;

an interface pivotally coupled to the housing, the interface comprising a first conductor and a second conductor and configured to transmit power between the rechargeable energy storage device and a device connected to the interface;

a first rigid post coupled to a first contact associated with the rechargeable energy storage device;

a first pin configured to couple the first rigid post to the first conductor of the interface such that the first pin and the first rigid post provide a conductive path from the first conductor of the interface to the first contact;

a first compressible element positioned to press the first pin against the first rigid post;

a second rigid post coupled to a second contact associated with the rechargeable energy storage device;

a second pin configured to couple the second rigid post to the second conductor of the interface such that the second pin and the second rigid post provide a conductive path from the second conductor of the interface to the second contact;

a second compressible element positioned to press the second pin against the second rigid post,

wherein the interface is configured to pivot about an axis defined by the first pin and the second pin.

2. The charging device of claim **1**, wherein the first compressible element comprises a first spring, and wherein the second compressible element comprises a second spring.

3. The charging device of claim **1**, wherein the interface is configured to pivot relative to the housing between a use position and a storage position, and wherein the charging device further comprises a stop member configured to press against a portion of the interface and provide resistance to releasably secure the interface in at least one of the use position and the storage position.

4. The charging device of claim **3**, wherein the interface comprises one or more recesses that the stop member is configured to engage and thereby releasably secure the interface in at least one of the use position and the storage position.

5. The charging device of claim **4**, further comprising a stop member sheath coupled to the housing and a third compressible element positioned to press the stop member against the interface, wherein the stop member extends from the stop member sheath.

6. The charging device of claim **3**, wherein the interface defines a track, and wherein the charging device further comprises a protrusion configured to engage the track and prevent the interface from shifting as it pivots between the use position and the storage position.

7. The charging device of claim **1**, further comprising a first conductive sheath that receives at least a portion of the first pin and a second conductive sheath that receives at least a portion of the second pin, wherein the first conductive sheath is electrically coupled with the first conductor of the interface, and wherein the second conductive sheath is electrically coupled with the second conductor of the interface.

8. A charging device comprising:

a body comprising a rechargeable energy storage device and a housing, wherein the housing comprises at least a first coupling portion; and

a modular adapter having a second coupling portion configured to be mated to the first coupling portion of the housing, the modular adapter comprising:

an interface comprising a first conductor and a second conductor and configured to transmit power between the rechargeable energy storage device and a device connected to the interface;

an adapter base comprising a plurality of contacts configured to be electrically coupled with contacts of the body;

a first rigid post coupled to a first contact of the adapter base;

a first pin configured to couple the first rigid post to the first conductor of the interface such that the first pin and the first rigid post provide a conductive path from the first conductor of the interface to the first contact of the adapter base;

a first compressible element positioned to press the first pin against the first rigid post;

a second rigid post coupled to a second contact of the adapter base;

a second pin configured to couple the second rigid post to the second conductor of the interface such that the second pin and the second rigid post provide a conductive path from the second conductor of the interface to the second contact of the adapter base; and

a second compressible element positioned to press the second pin against the second rigid post,

wherein the interface is configured to pivot about an axis defined by the first pin and the second pin,

wherein, when the modular adapter is mated to the housing, the body and the modular adapter form a single substantially rigid structure.

9. The charging device of claim **8**, wherein the first compressible element comprises a first spring, and wherein the second compressible element comprises a second spring.

10. The charging device of claim **8**, wherein the interface is configured to pivot relative to the adapter base between a use position and a storage position, and wherein the modular adapter further comprises a stop member configured to press against a portion of the interface and provide resistance to releasably secure the interface in at least one of the use position and the storage position.

11. The charging device of claim **10**, wherein the interface comprises one or more recesses that the stop member is

configured to engage and thereby releasably secure the interface in at least one of the use position and the storage position.

12. The charging device of claim **11**, wherein the modular adapter further comprises a stop member sheath coupled to the adapter base and a third compressible element positioned to press the stop member against the interface, wherein the stop member extends from the stop member sheath.

13. The charging device of claim **10**, wherein the interface defines a track, wherein the modular adapter further comprises a protrusion configured to engage the track and prevent the interface from shifting as it pivots between the use position and the storage position.

14. The charging device of claim **8**, further comprising a first conductive sheath that receives at least a portion of the first pin and a second conductive sheath that receives at least a portion of the second pin, wherein the first conductive sheath is electrically coupled with the first conductor of the interface, and wherein the second conductive sheath is electrically coupled with the second conductor of the interface.

15. A modular adapter for a charging device comprising:

an interface comprising a first conductor and a second conductor and configured to transmit power between the charging device and a device connected to the interface;

an adapter base comprising a plurality of contacts configured to be electrically coupled with contacts of the charging device;

a first rigid post coupled to a first contact of the adapter base;

a first pin configured to couple the first rigid post to the first conductor of the interface such that the first pin and the first rigid post provide a conductive path from the first conductor of the interface to the first contact of the adapter base;

a first compressible element positioned to press the first pin against the first rigid post;

a second rigid post coupled to a second contact of the adapter base;

a second pin configured to couple the second rigid post to the second conductor of the interface such that the second pin and the second rigid post provide a conductive path from the second conductor of the interface to the second contact of the adapter base; and

a second compressible element positioned to press the second pin against the second rigid post,

wherein the interface is configured to pivot about an axis defined by the first pin and the second pin.

16. The modular adapter of claim **15**, wherein the first compressible element comprises a first spring, and wherein the second compressible element comprises a second spring.

17. The modular adapter of claim **15**, wherein the interface is configured to pivot relative to the adapter base between a use position and a storage position, and wherein the modular adapter further comprises a stop member configured to press against a portion of the interface and provide resistance to releasably secure the interface in at least one of the use position and the storage position.

18. The modular adapter of claim **17**, wherein the interface comprises one or more recesses that the stop member is configured to engage and thereby releasably secure the interface in at least one of the use position and the storage position.

19. The modular adapter of claim **18**, further comprising a stop member sheath coupled to the adapter base and a third compressible element positioned to press the stop member against the interface, wherein the stop member extends from the stop member sheath.

20. The modular adapter of claim **17**, wherein the interface defines a track, wherein the modular adapter further comprises a protrusion configured to engage the track and prevent the interface from shifting as it pivots between the use position and the storage position.

21. The modular adapter of claim **15**, further comprising a first conductive sheath that receives at least a portion of the first pin and a second conductive sheath that receives at least a portion of the second pin, wherein the first conductive sheath is electrically coupled with the first conductor of the interface, and wherein the second conductive sheath is electrically coupled with the second conductor of the interface.

* * * * *