US007726994B1

(12) **United States Patent**
Willey

(10) **Patent No.: US 7,726,994 B1**
(45) **Date of Patent: Jun. 1, 2010**

(54) **ELECTRICAL CONNECTOR FOR A HELMET-MOUNTED NIGHT VISION SYSTEM**

(75) Inventor: **Charles D. Willey**, Roanoke, VA (US)

(73) Assignee: **ITT Manfacturing Enterprises, Inc.**, Wilmington, DE (US)

(*) Notice: Subject to any disclaimer, the term of this patent is extended or adjusted under 35 U.S.C. 154(b) by 0 days.

(21) Appl. No.: **12/363,055**

(22) Filed: **Jan. 30, 2009**

(51) **Int. Cl.**
H01R 27/00 (2006.01)

(52) **U.S. Cl.** **439/218**

(58) **Field of Classification Search** 439/217–222
See application file for complete search history.

(56) **References Cited**

U.S. PATENT DOCUMENTS

1,603,121	A	10/1926	Krone	
1,797,184	A	3/1931	Alden	
2,264,687	A	12/1941	Kovatch et al.	
2,751,569	A	6/1956	Anderson et al.	
3,633,151	A	1/1972	Sensabaugh	
3,980,368	A *	9/1976	Fremont	439/94
4,329,735	A	5/1982	Kawazoe	
4,440,464	A	4/1984	Spinner	
4,445,743	A	5/1984	Bakker	
4,666,276	A	5/1987	Chan	
5,017,818	A *	5/1991	Dohogne	310/71
5,087,207	A *	2/1992	Byrne	439/215
5,683,831	A *	11/1997	Baril et al.	429/96
6,607,401	B1 *	8/2003	Weaver et al.	439/607.09
6,662,370	B1	12/2003	Buchanan, Jr.	
6,938,276	B1	9/2005	Prendergast	
7,049,027	B2	5/2006	Buchanan, Jr. et al.	
7,094,089	B2 *	8/2006	Andre et al.	439/218
7,164,262	B2	1/2007	Zacay	
7,211,778	B1	5/2007	Smith et al.	
7,311,526	B2 *	12/2007	Rohrbach et al.	439/39
7,387,539	B2 *	6/2008	Trenne	439/660
7,591,657	B2 *	9/2009	Teicher	439/173
2007/0066111	A1 *	3/2007	Liang	439/217
2008/0227319	A1 *	9/2008	Lu	439/217

* cited by examiner

Primary Examiner—Gary F. Paumen
(74) *Attorney, Agent, or Firm*—RatnerPrestia

(57) **ABSTRACT**

An electrical connector for a helmet-mounted night vision system including a receptacle assembly and a mating plug assembly. The receptacle assembly is configured to be mechanically coupled either directly or indirectly to a helmet and electrically coupled to a night vision device that is mounted to the helmet. The plug assembly is configured to be mechanically and electrically coupled to a battery pack. The plug assembly and the receptacle assembly are configured to be releasably mated together in at least two different orientations for releasably mounting the battery pack to the helmet and supplying power from the battery pack to a night vision device that is mounted to the helmet.

17 Claims, 11 Drawing Sheets

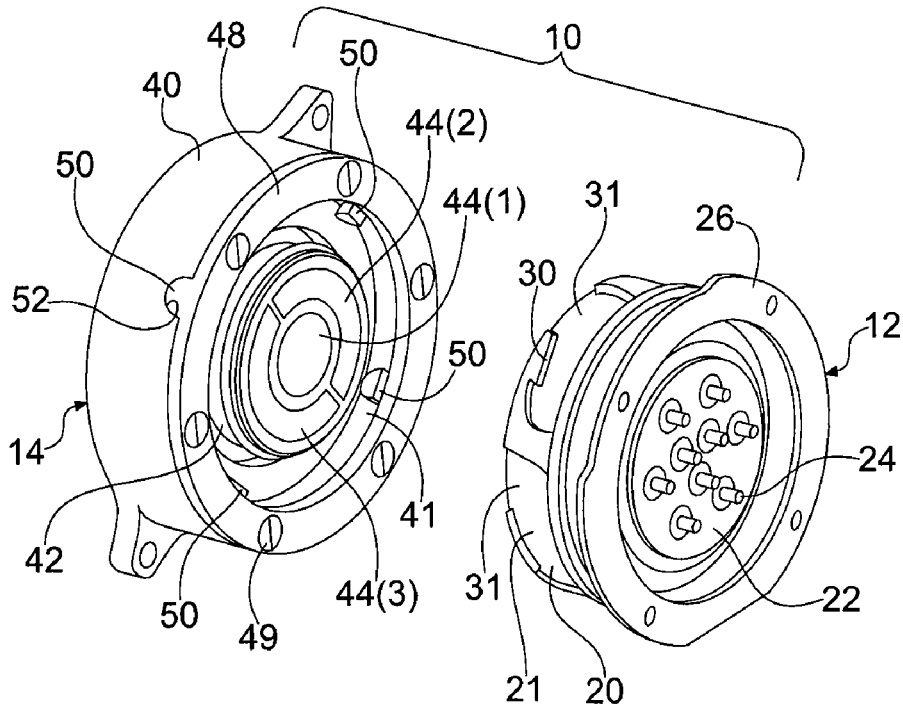

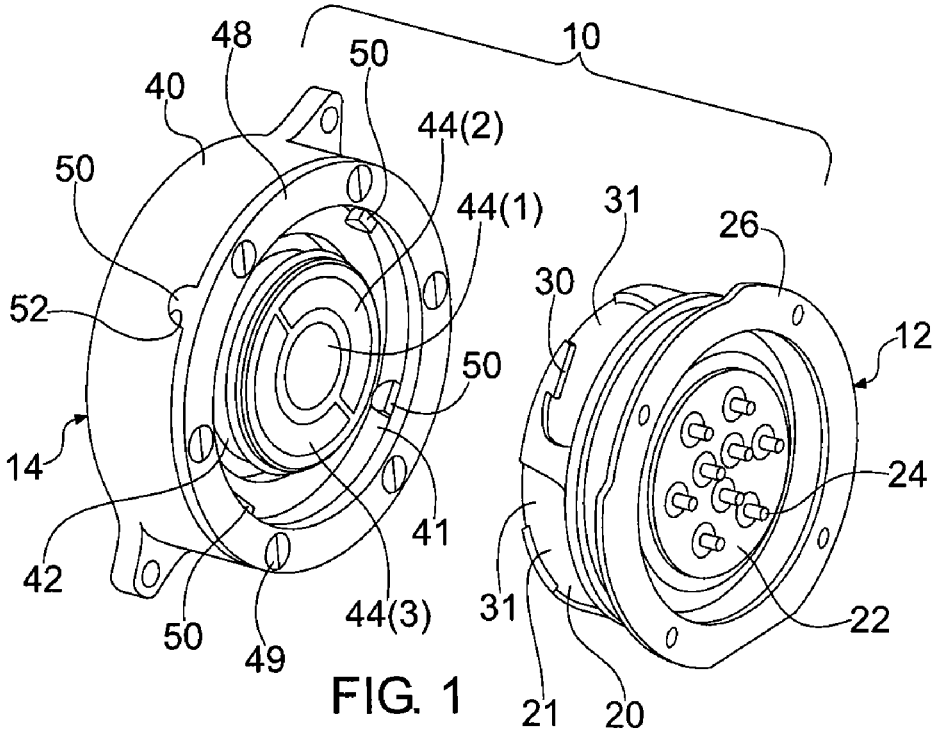
10
48
50
40
44(2)
50
44(1)
31
26
30
52
12
50
14
24
41
42
44(3)
31
22
50
49
21
20

FIG. 1

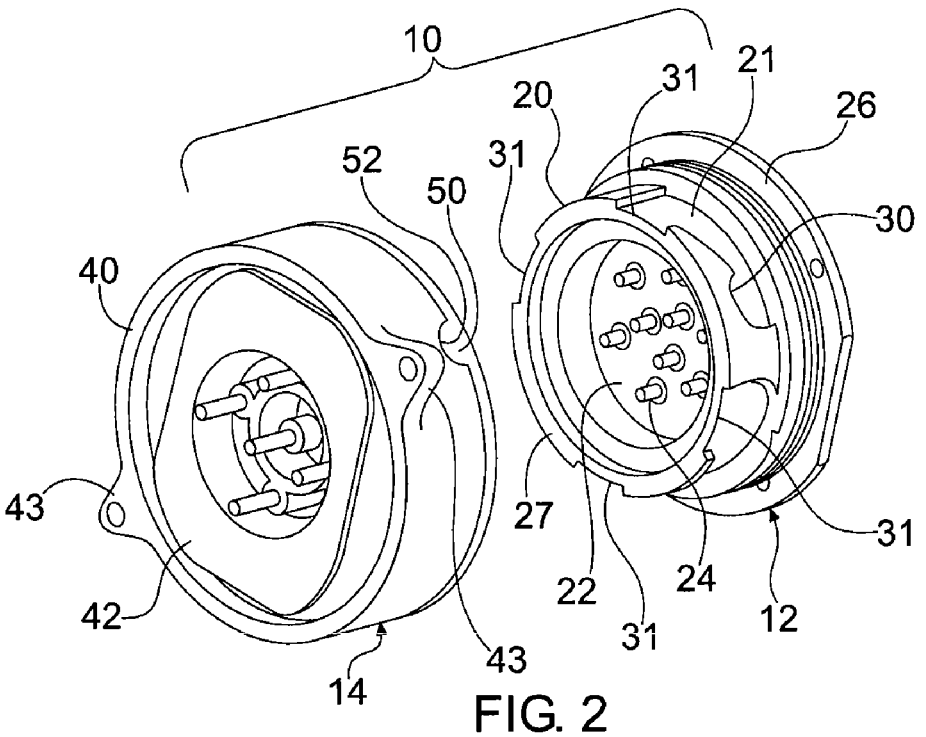
10
21
31
20
26
52
31
50
30
40
43
27
31
22
24
42
31
12
43
14

FIG. 2

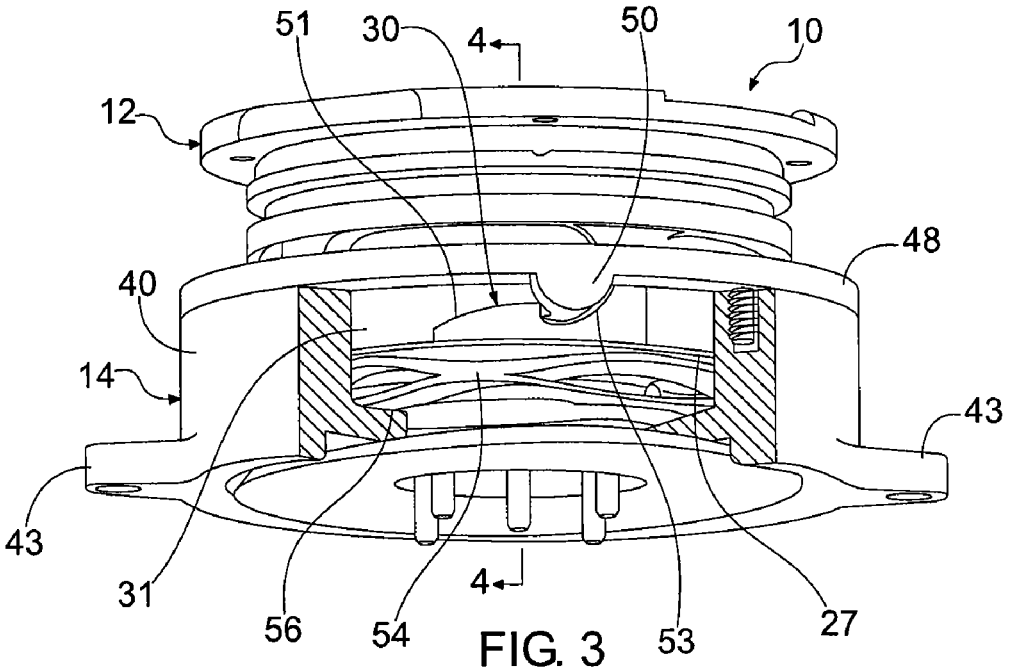
51
30
4
50
10
12
48
40
14
43
43
31
56
54
4
53
27

FIG. 3

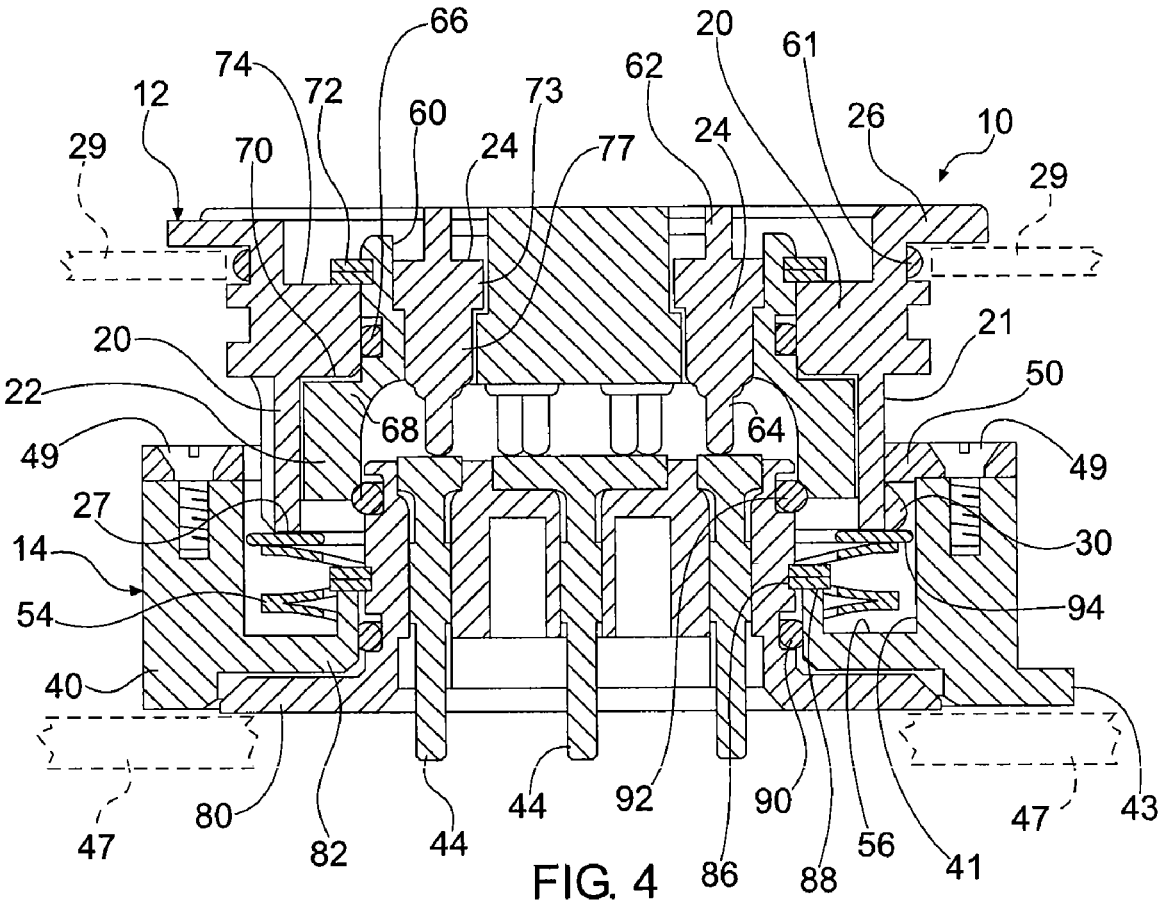
66
20
61
74
72
62
12
60
73
26
10
29
70
24
77
24
29
20
21
22
50
68
64
49
49
27
30
14
54
94
40
47
80
82
44
44
92
90
86
88
56
41
47
43

FIG. 4

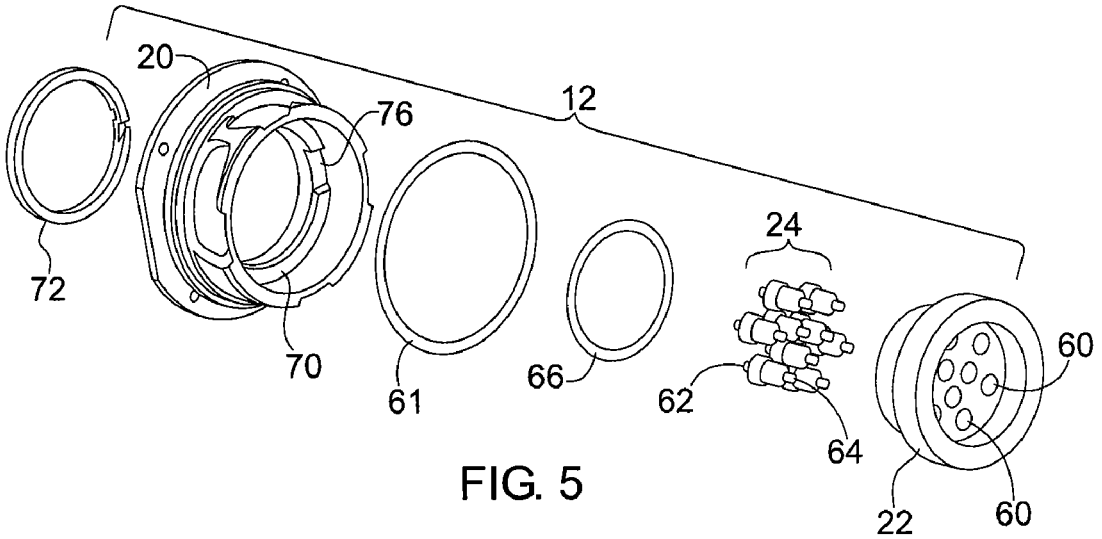
20
76
12
24
72
70
61
66
62
64
60
22
60

FIG. 5

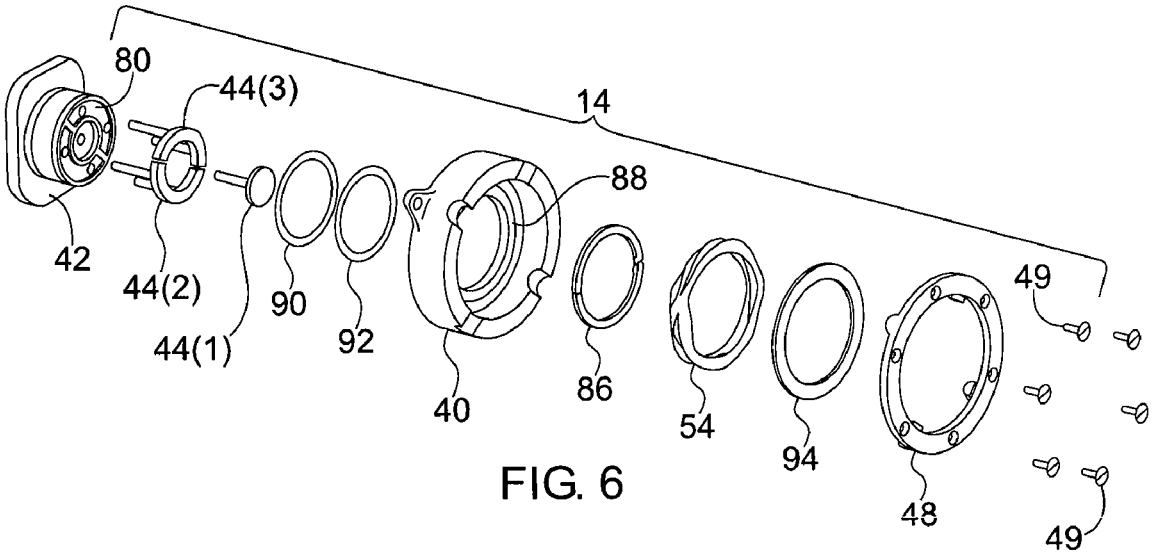
80
44(3)
14
88
42
44(2)
44(1)
90
92
40
86
54
94
48
49
49

FIG. 6

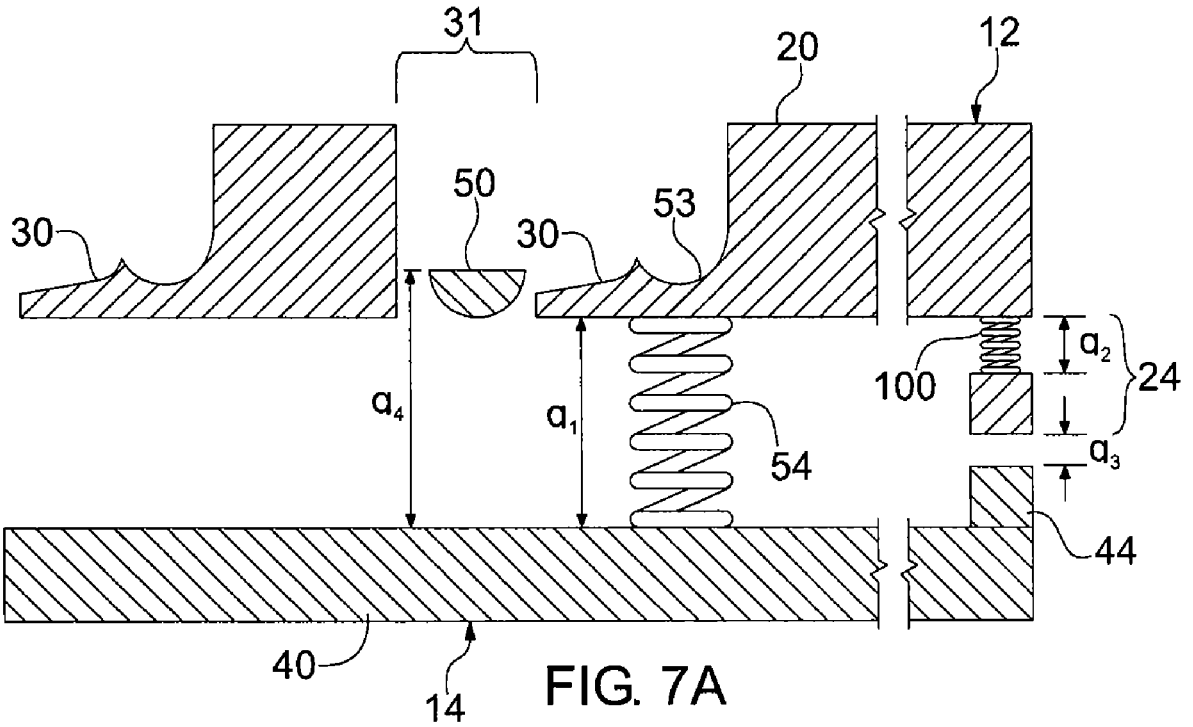
31
20
12
50
53
30
30
a_2
24
100
a_4
a_1
54
a_3
44
40
14

FIG. 7A

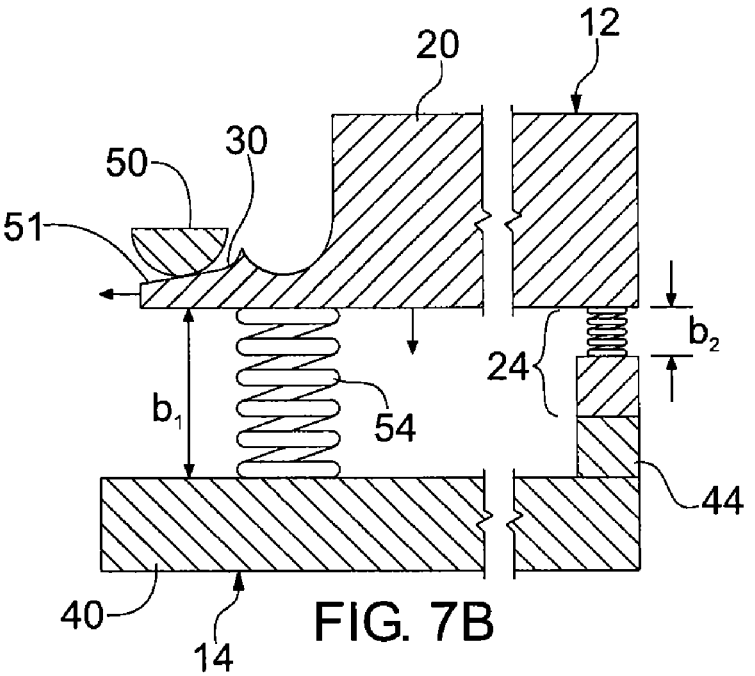
12
20
30
50
51
b_2
24
b_1
54
44
40
14

FIG. 7B

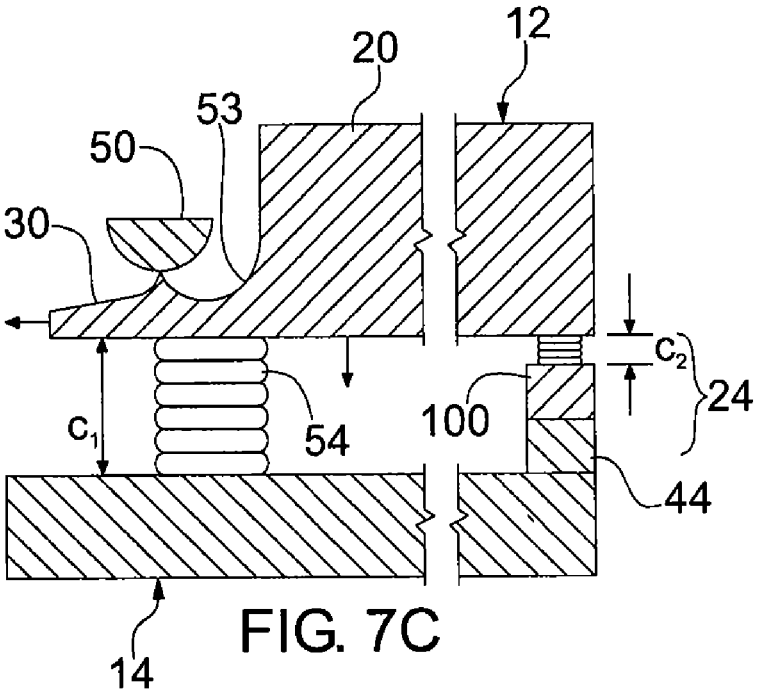
12
20
53
50
30
c_2
24
100
c_1
54
44
14

FIG. 7C

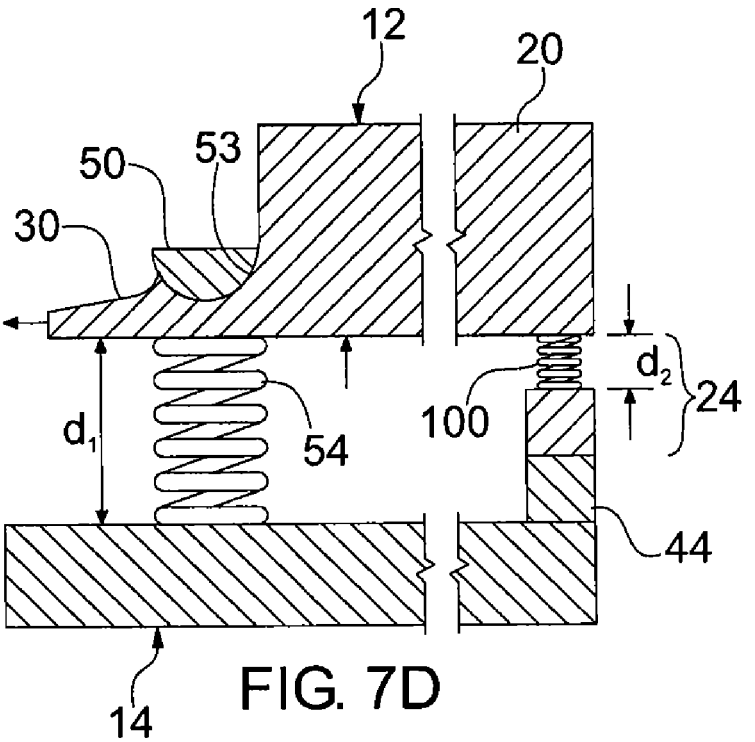
12
20
53
50
30
d_2
24
100
d_1
54
44
14

FIG. 7D

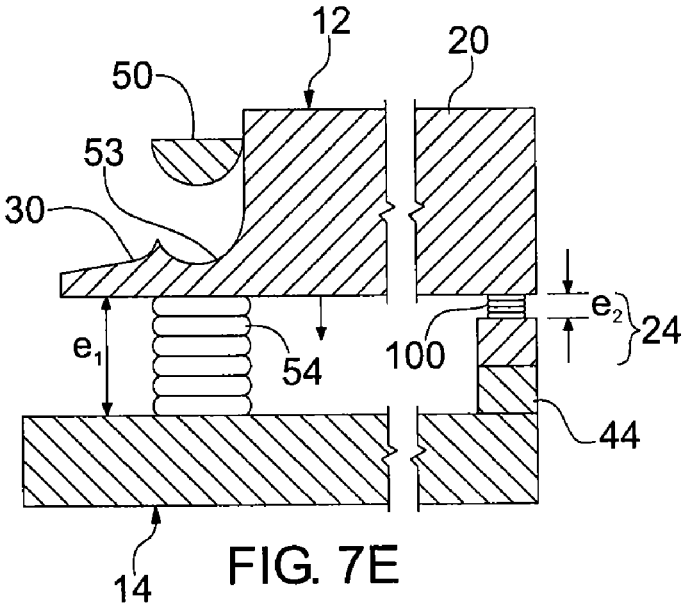
12
20
50
53
30
e_2
24
e_1
54
100
44
14

FIG. 7E

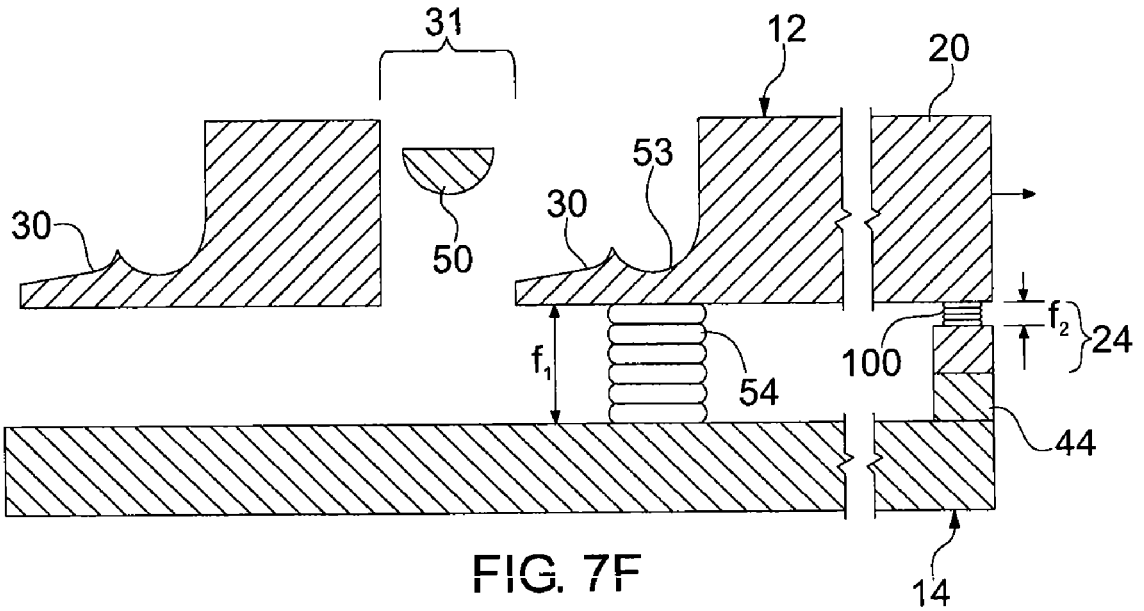
31
12
20
53
30
30
50
f_2
24
f_1
54
100
44
14

FIG. 7F

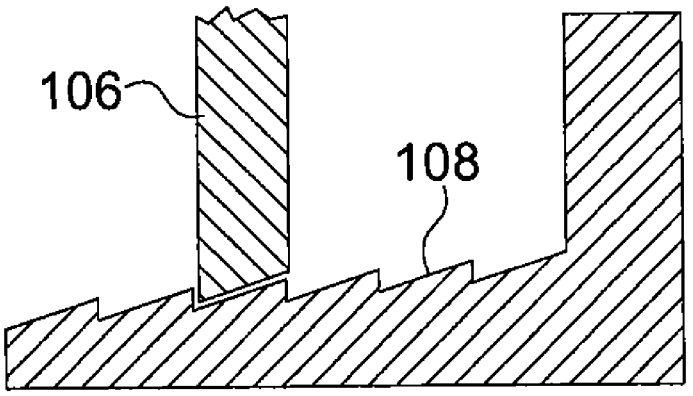

FIG. 8A

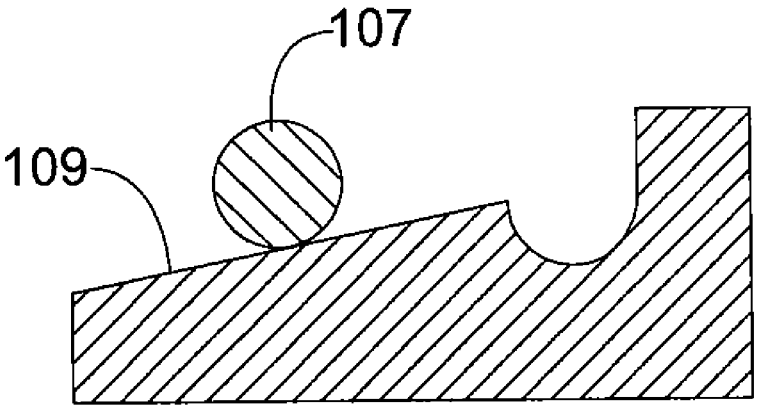

FIG. 8B

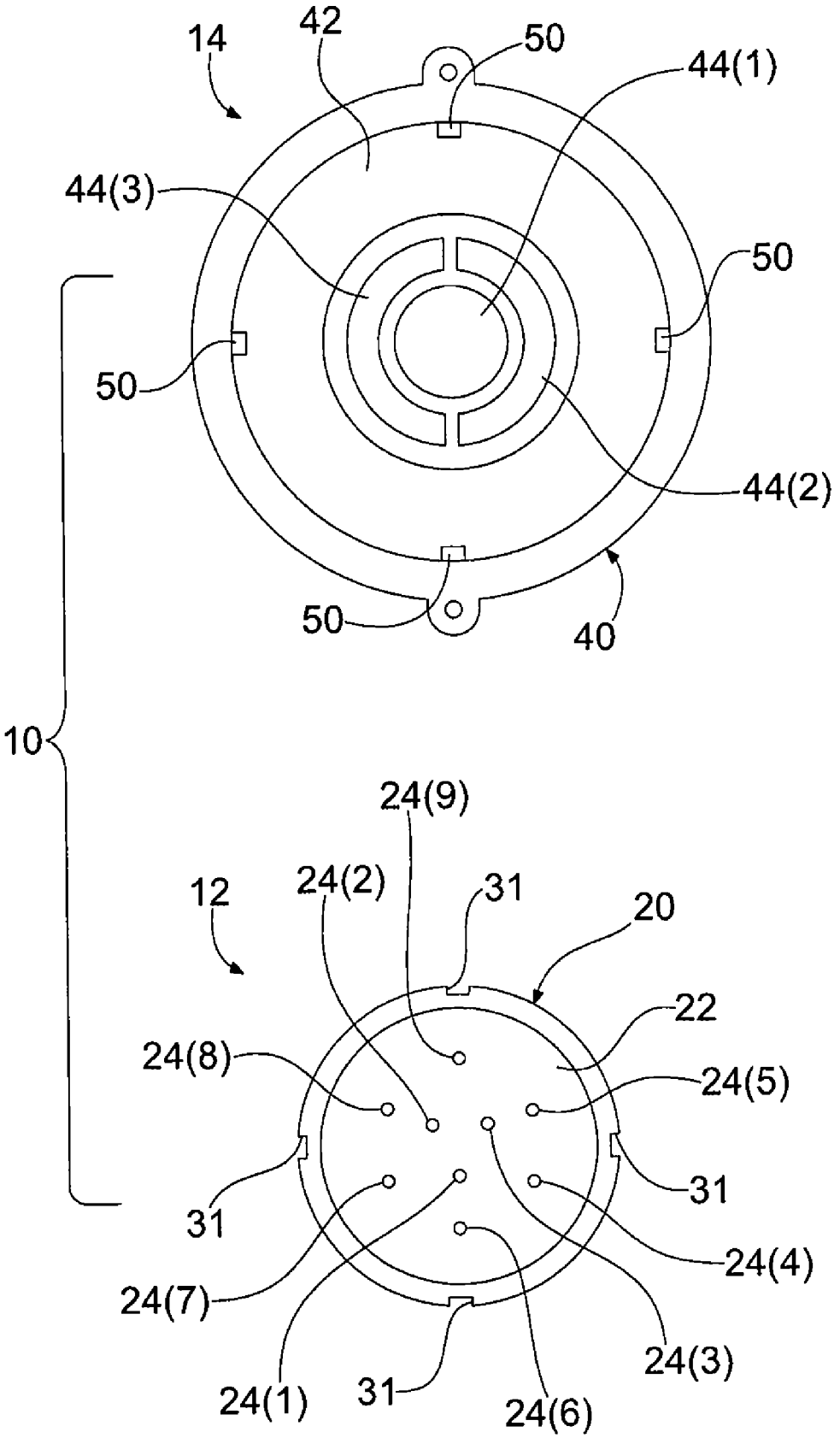
14
42
50
44(1)
44(3)
50
50
44(2)
50
40
10
24(9)
12
24(2)
31
20
22
24(8)
24(5)
31
31
24(4)
24(7)
24(3)
24(1)
31
24(6)

FIG. 9A

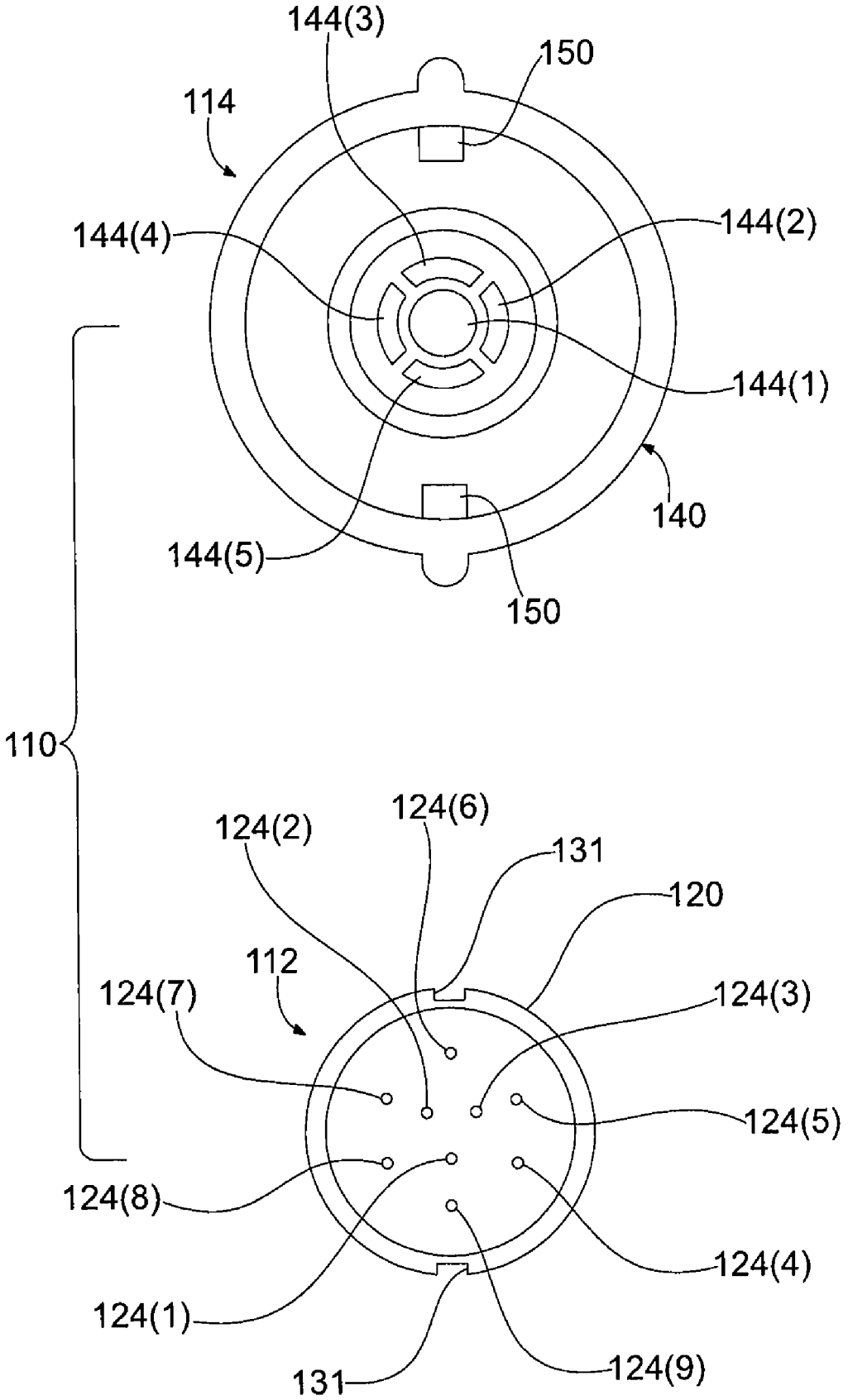
144(3)
150
114
144(4)
144(2)
144(1)
140
144(5)
150
110
124(2)
124(6)
131
120
112
124(7)
124(3)
124(5)
124(8)
124(4)
124(1)
131
124(9)

FIG. 9B

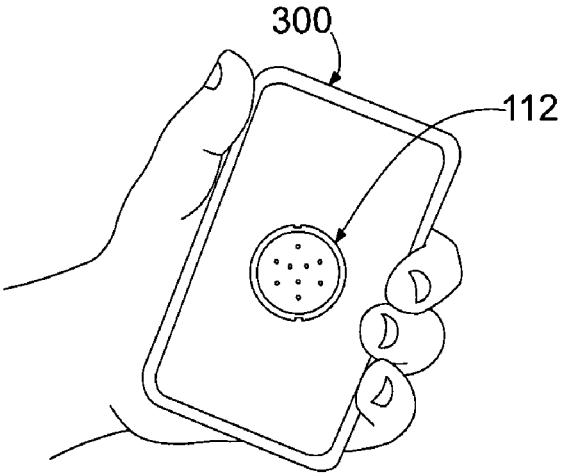

FIG. 10

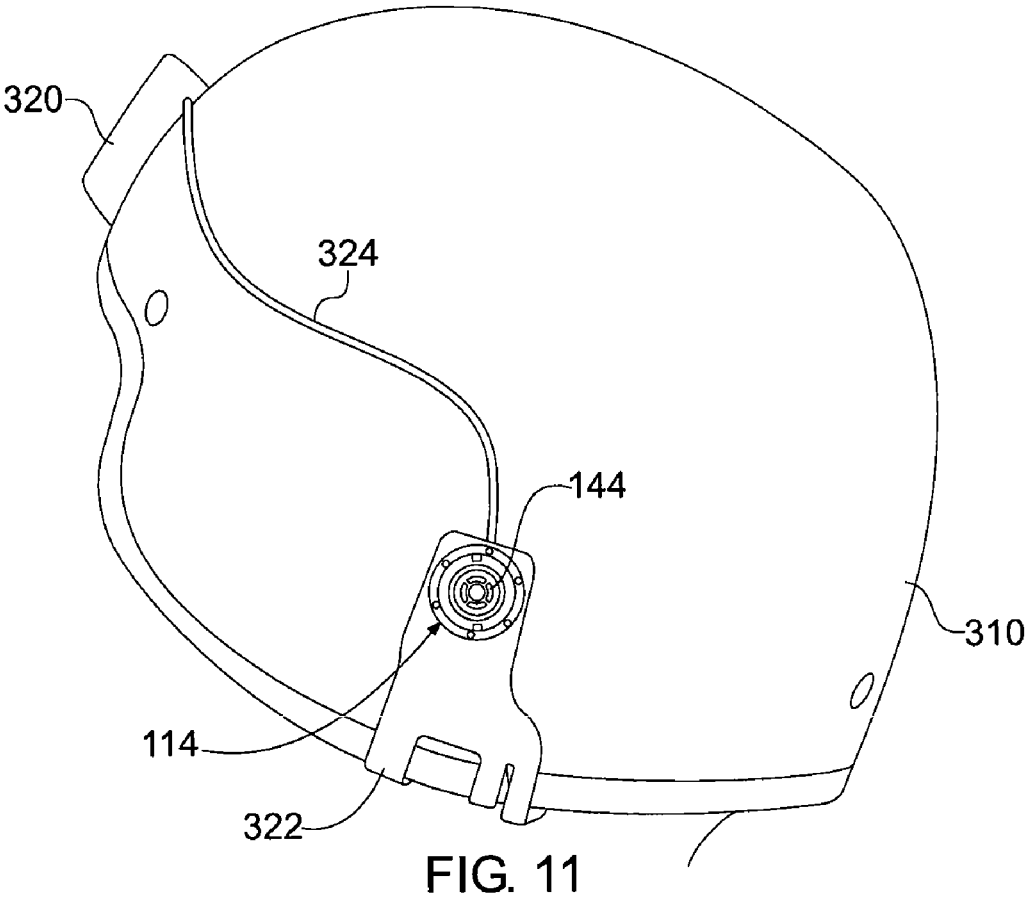

FIG. 11

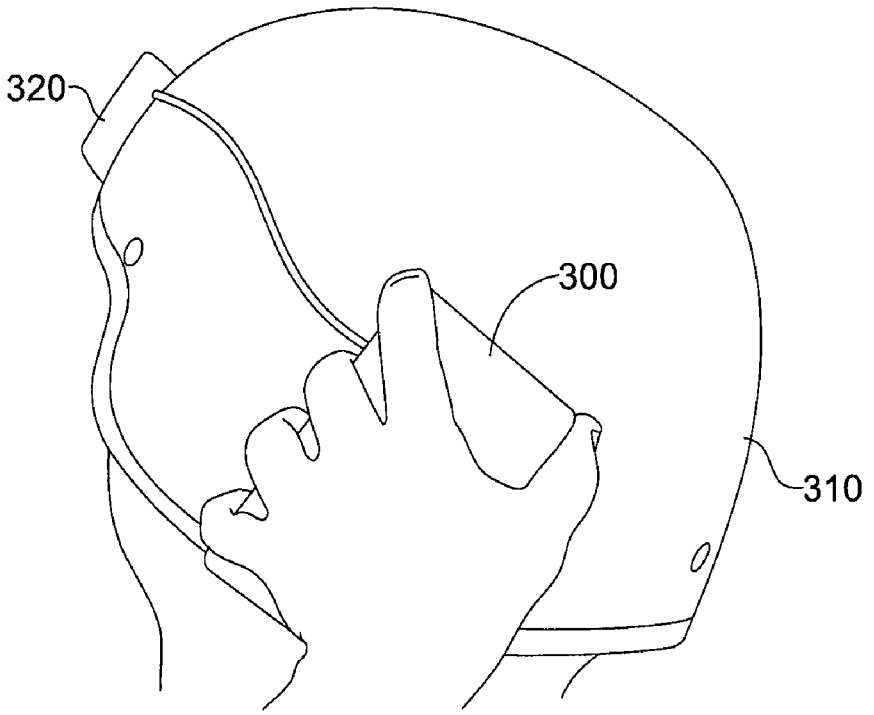

FIG. 12

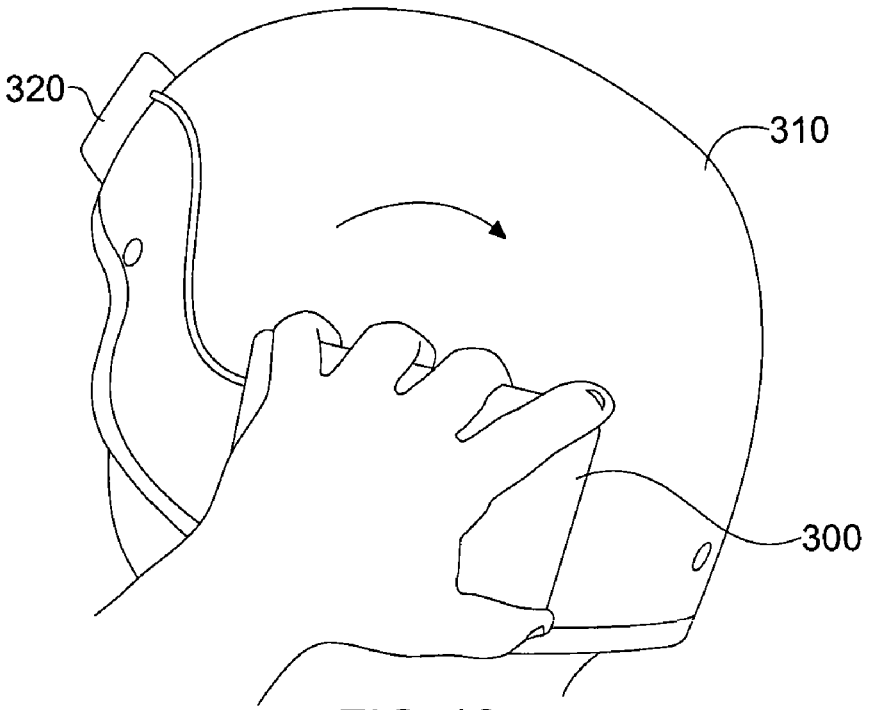

FIG. 13

ELECTRICAL CONNECTOR FOR A HELMET-MOUNTED NIGHT VISION SYSTEM

TECHNICAL FIELD

This invention generally relates to a connector for electronic devices. More particularly, it relates to a connector that is suitable for a helmet-mounted night vision system.

BACKGROUND OF THE INVENTION

Hot-shoe connectors are commonly used to provide a mechanical means of attachment as well as an electrical connection between two devices. By way of example, many conventional cameras incorporate hot shoe connectors for mounting flash units thereto. A hot-shoe receptacle is located on the top side of a camera, and a hot-shoe plug is disposed on the bottom end of the flash unit for attaching the flash unit to the hot-shoe receptacle of the camera. In assembly, the hot-shoe plug on the flash unit is slidably inserted into the hot-shoe receptacle on the camera. The plug and receptacle may be secured together by a clamping screw that is provided on the flash, or other means. In the center of the hot-shoe receptacle on the camera is a metallic contact that interfaces with a metallic contact on the hot shoe plug of the flash unit. The camera delivers power to the flash unit via the interface between the metallic contacts. The physical dimensions of a standard hot-shoe connector for cameras are defined by the International Organization for Standardization ISO 518:2006.

Hot shoe style connectors have been incorporated into other electronic devices. For example, many helmet-mounted night vision devices incorporate hot shoe connectors. Helmet-mounted night vision devices are disclosed, for example, in U.S. Pat. Nos. 7,211,778, 7,049,027, 6,938,276, 6,662,370, and 5,683,831, 4,666,276, 4,329,735, for example, which are incorporated by reference herein in their entirety. In a helmet-mounted night vision device, a battery pack (or other power source) is connected to the helmet-mounted night vision system, via a shielded cable, to provide power to the night vision system. Such an arrangement is disclosed in U.S. Pat. No. 5,683,831.

In a helmet-mounted night vision device incorporating a hot shoe connector, a hot shoe receptacle of the removable battery pack is mounted to a hot-shoe plug provided on the rear or side of the helmet. Such an arrangement is disclosed in U.S. Pat. No. 5,683,831. Users often mount the battery pack to the helmet when the helmet is already fastened to the head. To connect the hot shoe receptacle to the hot shoe plug, the user brings the battery pack to the rear or the side of the helmet with one hand. The user then orients the hot shoe receptacle with respect to the hot shoe plug. By virtue of the design of the hot shoe plug and the hot shoe receptacle, the plug and the receptacle align together along a single orientation. Thus, the user must manipulate the battery pack and/or the helmet until the proper orientation is achieved. Once the plug and the receptacle are properly oriented, the user inserts the plug into the receptacle. A spring loaded lever or a pin that is provided on the battery pack snaps into a recess defined on the hot shoe plug thereby locking the battery pack to the helmet. To release the battery pack from the helmet, the user translates the spring loaded lever to release the plug from the receptacle. With the same hand or another hand, the user then removes the battery pack from the helmet.

The foregoing steps for mounting the battery pack onto the helmet may be perceived as difficult and inconvenient for some users, especially for those with limited dexterity. More particularly, manipulating the hot shoe connector is sometimes made difficult by the possibility that the user is blindly reaching to the side or rear of his or her head and manipulating the battery pack and/or the helmet until the proper orientation is achieved. These factors hinder the installation of battery packs onto the helmet, which can be problematic in a battle scenario.

In view of the foregoing, there is a continuing need to further develop and refine connectors for mechanically and electrically connecting two devices together, in the interests of performance, convenience, manufacturability and modularity.

SUMMARY OF THE INVENTION

A connector including a plug assembly and a receptacle assembly is disclosed. The plug assembly and the receptacle assembly mate together to form the connector. The connector may be used with any electronic device, such as imaging devices, night vision devices, cameras, for example.

According to one aspect of the invention, an electrical connector for a helmet-mounted night vision system including a receptacle assembly and a mating plug assembly is provided. The receptacle assembly is configured to be mechanically coupled either directly or indirectly to a helmet and electrically coupled to a night vision device that is mounted to the helmet. The plug assembly is configured to be mechanically and electrically coupled to a battery pack. The plug assembly and the receptacle assembly are configured to be releasably mated together in at least two different orientations for releasably mounting the battery pack to the helmet and supplying power from the battery pack to a night vision device that is mounted to the helmet.

According to another aspect of the invention, a helmet-mounted night vision assembly is provided. The helmet-mounted night vision assembly generally includes a helmet including provisions for mounting a night vision device thereto, and a battery pack that is configured to contain at least one battery. A receptacle assembly is mounted to the helmet and a plug assembly is mounted to the battery pack. The plug assembly and the receptacle assembly are configured to be releasably mated together in at least two different orientations for releasably mounting the battery pack to the helmet and supplying power from the battery of the battery pack to a night vision device that is mounted to the helmet.

In the above description, the terms 'plug' and 'receptacle' may be used interchangeably. Those terms are used to denote that separate assemblies are employed together form a connection.

These and other aspects of the present invention will become clear from the detailed discussion below when taken into consideration with the drawings. It is to be understood that the following discussion is intended merely to illustrate the preferred embodiment of the present invention. However, the present invention is not limited to the illustrated embodiments, but is limited solely by the claims appended to this specification.

BRIEF DESCRIPTION OF THE FIGURES

The invention is best understood from the following detailed description when read in connection with the accompanying drawing. It is emphasized that, according to common practice, the various features of the drawing are not to scale. Included in the drawing are the following figures:

FIG. **1** depicts a perspective view of a connector including a plug assembly and a receptacle assembly, wherein the plug assembly is shown separated from the receptacle assembly, according to one exemplary embodiment of the invention.

FIG. **2** depicts another perspective view of the connector of FIG. **1**.

FIG. **3** depicts a perspective view of the connector of FIG. **1** shown in a mated configuration, wherein a portion of the receptacle assembly is cut-away to reveal engagement between the plug assembly and the receptacle assembly.

FIG. **4** depicts a cross-sectional side view of the mated connector of FIG. **3** taken along the lines **4-4**.

FIG. **5** depicts an exploded view of the plug assembly of FIG. **1**.

FIG. **6** depicts an exploded view of the receptacle assembly of FIG. **1**.

FIGS. **7**A-**7**D schematically depict the process of engaging the plug assembly with the receptacle assembly.

FIGS. **7**E and **7**F schematically depict the process of disengaging the plug assembly from the receptacle assembly.

FIG. **8**A depicts a schematic view of a protrusion mated with a cam surface, according to another exemplary embodiment of the invention.

FIG. **8**B depicts a schematic view of a protrusion mated with a cam surface, according to yet another exemplary embodiment of the invention.

FIG. **9**A depicts a schematic top plan view of a simplified version of the plug assembly and the receptacle assembly.

FIG. **9**B depicts a schematic top plan view of a simplified version of a plug assembly and a receptacle assembly, according to another exemplary embodiment of the invention.

FIG. **10** depicts the plug assembly of FIG. **9**B mounted to a battery pack of a night vision system, wherein the battery pack is shown grasped by an end-user's hand.

FIG. **11** depicts the receptacle assembly of FIG. **9**B mounted to a helmet.

FIG. **12** depicts an initial step of installing the plug assembly of the battery pack of FIG. **10** onto the receptacle assembly of the helmet of FIG. **11**.

FIG. **13** depicts the step of rotating the battery pack with respect to the helmet to connect the plug and the receptacle and lock the battery pack to the helmet.

DETAILED DESCRIPTION OF THE INVENTION

This invention will now be described with reference to several embodiments selected for illustration in the drawings. It will be appreciated that the scope and spirit of the invention are not limited to the illustrated embodiments.

As used herein, the term 'connector' refers to a device that provides an electrical connection between two elements, a mechanical connection between two elements, or both. The term 'connector' may also refer to a single component, such as a plug or a receptacle, for example, that is employed to mate with another component to establish a connection therebetween.

FIGS. **1** and **2** depict perspective views of a connector **10**, according to one exemplary embodiment of the invention. The connector **10** may be referred to herein as a rotary hot shoe connector or a roto-shoe connector. The connector **10** generally includes a plug assembly **12** and a receptacle assembly **14**. The plug assembly **12** is shown separated from the receptacle assembly **14** in FIGS. **1** and **2**. The plug assembly **12** and the receptacle assembly **14** are configured to mate together to form the connector **10** (as shown in FIGS. **3** and **4**). The connector **10** is generally configured to mechanically and/or electrically join two devices together. By way of example, the connector **10** may join a battery pack to an electronic device, a cable to an electronic device, a cable to a battery pack, and so forth. One particular application of the connector **10** is illustrated in FIGS. **10-13**.

The plug assembly **12** generally includes a substantially cylindrical body **20** defining a revolved surface **21**, an insulator **22** retained within the body **20** and a series of electrical contacts **24** (**9** shown) mounted within respective apertures defined in the insulator **22**. A flange **26** radially extends from the body **20**. A series of holes **28** are provided on the flange **26**. Although not shown, a fastener may be inserted through each hole **28** for mounting the plug assembly **12** to a panel (such as panel **29** shown in FIG. **4**). It should be understood that the panel **29** does not form part of the plug assembly **12**.

Four cam surfaces **30** extend from the revolved surface **21** of the body **20**. Each cam surface **30** extends circumferentially about the revolved surface **21** from a lower annular surface **27** of the body **20**. According to the exemplary embodiment shown, each cam surface **30** extends outwardly from the revolved surface **21**, i.e., away from the central axis of the body **20**. Alternatively, the cam surfaces **30** may be recessed within the revolved surface **21**.

The cam surfaces **30** are spaced about the circumference of the body **20**. According to one aspect of the invention, the cam surfaces **30** are evenly spaced about the circumference of the body **20**. According to this exemplary embodiment, the plug assembly **12** includes four cam surfaces **30**. Those skilled in the art will understand from the description provided herein that the plug assembly **12** should include at least one cam surface **30** and may include any number of cam surfaces **30**.

A passageway **31**, provided in the form of a slot or an opening, is defined between adjacent cam surfaces **30**. As described in greater detail with reference to the receptacle assembly **14**, a series of protrusions **50** provided on the receptacle assembly **14** pass through respective passageways **31** to join the assemblies **12** and **14** together. Additionally, upon disengaging the plug assembly **12** from the receptacle assembly **14**, the protrusions **50** provided on the receptacle assembly **14** are removed through the passageways **31**.

According to this exemplary embodiment, the plug assembly **12** includes four passageways **31** (see FIG. **2**). Providing multiple passageways **31** enables an end-user to join the assemblies **12** and **14** at multiple orientations. More specifically, upon mating the assemblies **12** and **14**, any protrusion **50** of the receptacle assembly **14** can enter through any passageway **31** of the plug assembly **12**. Providing multiple locations for joining the plug assembly **12** with the receptacle assembly **14**, or vice versa, simplifies the end-user's task of assembling those components together. As will be described in greater detail with reference to FIG. **6**, the electrical contacts **24** and **44** of the assemblies **12** and **14** are arranged such that the assemblies **12** and **14** may be joined at any one of the multiple engagement points.

The receptacle assembly **14** generally includes a substantially cylindrical body **40** defining a revolved surface **41**, an insulator **42** retained within the body **40**, and three electrical contacts **44**(**1**)-**44**(**3**) mounted within respective apertures defined in the insulator **42**. The electrical contacts **44**(**1**)-**44** (**3**) (referred to collectively as electrical contacts **44**) are best illustrated in FIG. **6**. Two bosses **43** extend from the lower end of the body **40**. Each boss **43** includes a hole, and, although not shown, a fastener may be inserted through a respective hole of a boss **43** for mounting to a panel (see panel **47** shown in FIG. **4**).

A ring **48** is mounted to the top end of the body **40**. Alternatively, the ring **48** may be integral with the body **40**. Four semi-circular protrusions **50** extend from the interior annular

surface of the ring **48** toward the central axis of the body **40**. Each protrusion **50** is configured to bear against a cam surface **30** of the plug assembly **12**, as described in greater detail with respect to FIGS. **7**A-**7**F. Each protrusion **50** extends from the lower surface of the ring **48** and is at least partially positioned within a recess **52** defined on the top surface of the body **40**.

The protrusions **50** may be semi-circular, as shown, circular, polygonal (as shown in FIG. **8**A), square, rectangular or any other shape. As will be described in greater detail with reference to FIG. **8**A, the protrusions **50** are sized and shaped to complement the shape of the cam surfaces **30** of the plug assembly **12**. The protrusions **50** may be integrally formed with the ring **48**, or, alternatively, the protrusions **50** may be provided in the form of pins or fasteners that are mounted to the ring **48** or the body **40**.

The protrusions **50** are spaced apart about the circumference of the body **40**. Moreover, according to one aspect of the invention, the protrusions **50** are evenly spaced apart about the circumference of the body **40**. The radial distance separating adjacent protrusions **50** may be substantially equal to the radial distance separating adjacent cam surfaces **30** of the plug assembly **12** (as shown in FIGS. **1** and **2**).

According to this exemplary embodiment, the receptacle assembly **14** includes four protrusions **50**. Those skilled in the art will understand from the description herein that the receptacle assembly **14** should include at least one protrusion **50** and may include any number protrusions **50**. The number of protrusions **50** may be equal to the number of cam surfaces **30** or may vary.

FIG. **3** depicts a perspective view of the connector **10** of FIG. **1** shown in a mated configuration, wherein a portion of the body **40** of the receptacle assembly **14** is cut-away to reveal engagement between the plug assembly **12** and the receptacle assembly **14**. As shown in FIG. **3**, the cam surface **30** of the plug assembly **12** is defined by a curvilinear surface **51** that leads into a semi-circular recess **53**. One of the protrusions **50** of the receptacle assembly **14** is retained within a recess **53** of a cam surface **30** of the plug assembly **12**. Although not shown, all of the protrusions **50** may be retained in a respective recess **53** simultaneously.

FIG. **4** depicts a cross-sectional side view of the mated connector **10** of FIG. **3** taken along the lines **4**-**4**. As best shown in FIG. **4**, the revolved surfaces **21** and **41** of the assemblies **12** and **14** are positioned to face each other. A spring **54** is positioned between the lower annular surface **27** of the plug assembly **12** and a lower interior surface **56** of the body **40** to bias the cam surface **30** against the protrusion **50**, as shown. The spring **54** maintains a load interface between the protrusion **50** and the cam surface **30**, such that the rotational and axial positions of the assemblies **12** and **14** are generally fixed and "play" between the assemblies **12** and **14** is substantially reduced or eliminated entirely.

FIGS. **5** and **6** depict exploded views of the assemblies **12** and **14**, respectively. Referring now to FIGS. **4**-**6**, the plug assembly **12** generally comprises a body **20**, an insulator **22** that is mounted to the body **20** and a series of electrical contacts **24** mounted to the insulator **22**. The panel **29** of a first electronic device (not shown) is mounted to the flange **26** of the plug assembly **12**. An o-ring **61** is positioned in an annular recess formed in the body **20** at an interface between the body **20** and the panel **29**.

The insulator **22** is fixedly mounted to the body **20**. More particularly, a shoulder portion **68** of the insulator **22** bears against a shoulder portion **70** of the body **20**. A retaining ring **72** is positioned within a recess defined in the insulator **20** and is positioned to bear on the surface **74** of the body **20**. The retaining ring **72** and the shoulder **68** of the insulator **22** lock the insulator **22** in a fixed vertical position. Although not explicitly shown, a protrusion extends from the insulator **22** to engage a slot **76** (see FIG. **5**) formed in the body **20** to retain the insulator **22** in a fixed rotational position with respect to the body **20**. An o-ring **66** is positioned within a groove formed in the insulator **22** at the interface between the insulator **22** and the body **20**. The o-ring **66** limits the ingress of contaminants (such as water) at the interface between the body **20** and the insulator **22**.

The electrical contacts **24** are press fit, or otherwise mounted, through holes **60** defined in the insulator **22**. Each hole **60** includes a large diameter portion for accommodating a large diameter portion **73** of the electrical contact **24** and a smaller diameter portion for accommodating a relatively smaller diameter portion **77** of the electrical contact **24**. As described in greater detail with respect to FIGS. **7**A-**7**F, the electrical contacts **24** are resiliently deformable under an applied load and return to their original shape in the absence of an applied load. A resilient member (not shown) is positioned within the large diameter portion **73** of each electrical contact **24**. Suitable electrical contacts (both resilient and non-resilient) are manufactured and distributed by the Mill-Max Corporation of Oyster Bay, N.Y., USA. According to another exemplary embodiment not illustrated herein, the electrical contacts **44** are resiliently deformable.

As best shown in FIG. **4**, in a mated configuration of the connector **10**, the electrical contacts **24** of the plug assembly **12** are positioned in direct, physical contact with the electrical contacts **44** of the receptacle assembly **14** for distributing power and signal(s) between the assemblies **12** and **14** of the connector **10**. Specifically, the end **64** of each contact **24** bears on a conductive surface of electrical contact **44** of the receptacle assembly **14**. The opposing end **62** of each contact **24** may be mounted to a printed circuit board, a cable, a wire, or a flex circuit, for example, that is connected to a first electronic device (not shown). The first electronic device may be a battery pack, for example (as shown in FIG. **10**).

Referring still to FIGS. **4**-**6**, the receptacle assembly **14** generally includes a body **40**, an insulator **42** mounted within the body **40**, and five electrical contacts **44** mounted within the insulator **42**. The body **40** includes two bosses **43** (one shown), each including a hole defined therethrough. Although not shown, a fastener may be inserted through the hole of the boss **43** to mount the body **40** to the panel **47** of a second electronic device. The second electronic device may be, for example, a night vision device or a cable extending from a night vision device.

The ring **48** is fixedly mounted to the top end of the body **40**. A series of flush-mounted fasteners **49** are provided for mounting the ring **48** to the top end of the body **40**. Although not shown, the ring **48** may be integrated with body **40** to reduce the number of components of the receptacle assembly **14**.

The insulator **42** is fixedly mounted to the body **40**. More particularly, a shoulder portion **80** of the insulator **42** bears against a shoulder portion **82** of the body **40**. A retaining ring **86** is positioned within a recess defined in the insulator **42** and is positioned to bear on the surface **88** of the body **20**. The retaining ring **86** and the shoulder **80** of the insulator **42** lock the insulator **42** in a fixed vertical position. Although not explicitly shown, a protrusion extends from the underside of the insulator **42** to engage a slot formed in the body **40** to retain the insulator **42** in a fixed rotational position with respect to the body **40**.

An o-ring **90** is positioned within a groove formed in the insulator **42** at the interface between the insulator **42** and the body **40**. The o-ring **90** limits the ingress of contaminants

(such as water) at the interface between the body **40** and the insulator **42**. Another o-ring **92** is positioned within a groove formed in the insulator **42** at the interface between the insulator **42** and the insulator **22** of the plug assembly **12**. The o-ring **92** limits the ingress of contaminants (such as water) at the interface between the assemblies **12** and **14**. The o-ring **92** provides a simple, easily controlled, and robust means of keeping fluid and debris out of the electrical interface.

A spring **54** is positioned on the lower interior surface **56** of the receptacle assembly **14**. A thrust bearing **94**, in the form of a metallic ring, is positioned against the spring **54**. The thrust bearing **94** is sandwiched between the spring **54** and the insulator **22** of the plug assembly **12**. The spring **54** and the thrust bearing **56** are captivated within the receptacle assembly **14** between the lower interior surface **56** and the protrusions **50**. As mentioned previously, the spring **54** biases the cam surface **30** of the plug assembly **12** against the protrusion **50** of the receptacle assembly **14**, as shown.

The ring **48**, the body **20** of the plug assembly **12** and the body **40** of the receptacle assembly **14** may be formed from a metallic material, a polymer, or any other desirable material. Those components may be formed by a molding or a machining operation, for example. The insulators **22** and **42** of the assemblies may be formed from a dielectric material by a molding or a machining operation, for example.

FIGS. **7**A-**7**D schematically depict the process of engaging the assemblies **12** and **14**, and FIGS. **7**E and **7**F schematically depict the process of disengaging the assemblies **12** and **14**. It should be understood that all of the components of connector **10** are shown schematically in FIGS. **7**A-**7**F. In the schematic depiction, the plug assembly **12** includes the body **20**, which defines the cam surface **30**, and the electrical contact **24**, as denoted by the similar cross-section hatching. The electrical contact **24** includes an integral resilient member **100**, referred to hereinafter as spring **100**.

In the schematic depiction, the receptacle assembly **14** includes the body **40**, a protrusion **50** fixedly mounted with respect to the body **40** and one electrical contact **44**, as denoted by the similar cross-section hatching. It should be understood that position of the protrusion **50** with respect to the body **40** of the receptacle assembly **14** is fixed. Accordingly, the vertical gap a_4 between the body **40** of the receptacle assembly **14** and the protrusion **50** remains constant throughout the schematic depictions of FIGS. **7**A-**7**F.

To facilitate explanation of FIGS. **7**A-**7**F, rotational and translational motion of the plug assembly **12** with respect to the receptacle assembly **14** is described. It should be understood, however, that motion of the receptacle assembly **14** with respect to the plug assembly **12** would produce substantially the same result. Moreover, the receptacle assembly **14** and the plug assembly **12** may be moved with respect to each other simultaneously.

Referring now the individual figures, FIG. **7**A depicts a starting position of the assemblies **12** and **14**. In FIG. **7**A the assemblies **12** and **14** are shown joined together, but not mechanically or electrically connected. The protrusion **50** of the receptacle assembly **14** is positioned in a passageway **31** between adjacent the cam surface **30** of the plug assembly **12**. The spring **54** is maintained in a relaxed stated having a free-state length a_1. The spring **100** of the electrical contact **24** is also maintained in a relaxed state having a free-state length a_2. The electrical contacts **24** and **44** of the assemblies **12** and **14**, respectively, are separated by a gap a_3, thus, no electrical connectivity can exist between the assemblies **12** and **14**.

FIG. **7**B depicts a schematic view of the assemblies **12** and **14** engaged with each other. The protrusion **50** of the receptacle assembly **14** is positioned on the curvilinear surface **51** of the cam surface **30** of the plug assembly **12**. To move the plug assembly **12** from the disengaged position in FIG. **7**A to the engaged position in FIG. **7**B, an end-user translates the plug assembly **12** downward (see vertical arrow) against the force of the springs **54** and **100** and rotates the plug assembly **12** in a clockwise direction (see horizontal arrow). In the arrangement shown in FIG. **7**B, the spring **54** has a compressed length b_1, which is less than the free-state length a_1 of the spring **54** shown in FIG. **7**A. The spring **100** of the contact **24** has a compressed length b_2, which is less than the free-state length a_2 of the spring **100** shown in FIG. **7**A. The electrical contact **24** bears on the electrical contact **44**, establishing electrical connectivity between the assemblies **12** and **14**.

FIG. **7**C depicts a schematic view of the protrusion **50** of the receptacle assembly **14** further advanced along the cam surface **30** of the plug assembly **12**. To move the plug assembly **12** from the position in FIG. **7**B to the position in FIG. **7**C, an end-user rotates the plug assembly **12** in the clockwise direction (see horizontal arrow). As the plug assembly **12** rotates in the clockwise direction and the cam surface **30** translates along the protrusion **50** (or vice versa), the protrusion **50** urges the body **20** of the plug assembly **12** in the downward direction against the force of the springs **54** and **100**. The spring **54** has a compressed length c_1, which is less than the compressed length b_1 of FIG. **7**B. The spring **100** of the contact **24** has a compressed length c_2, which is less than the compressed length b_2 of FIG. **7**B.

FIG. **7**D depicts a schematic view of the protrusion **50** of the receptacle assembly **14** further advanced along the cam surface **30** of the plug assembly **12**. In FIG. **7**D the assemblies **12** and **14** are in a locked configuration, whereby both an electrical and mechanical connection are established between the assemblies **12** and **14**. To move the plug assembly **12** from the position in FIG. **7**C to the engaged position in FIG. **7**D, an end-user rotates the plug assembly **12** further in the clockwise direction (see horizontal arrow). As the plug assembly **12** rotates in the clockwise direction and the cam surface **30** translates along the protrusion **50**, the springs **54** and **100** urge the body **20** of the plug assembly **12** upwards (see arrow) to seat the protrusion **50** within the recess **53** of the cam surface **30** of the plug assembly **12**. The walls of the recess **53** limit rotation of both the plug assembly **12** and the receptacle assembly **14**. In FIG. **7**D, the spring **54** has a compressed length d_1, which is greater than the compressed length c_1 of FIG. **7**C. The spring **100** of the contact **24** has a compressed length d_2, which is less than the compressed length c_2 of the spring **100** shown in FIG. **7**C.

FIG. **7**E depicts a schematic view of the plug assembly **12** mechanically disengaged from the receptacle assembly **14**. More particularly, in FIG. **7**E, the cam surface **30** of the plug assembly **12** is physically separated from the protrusion **50** of the receptacle assembly **14**. To move the plug assembly **12** from the position in FIG. **7**D to the position in FIG. **7**E, an end-user translates the body **20** of the plug assembly **12** downward (see vertical arrow) against the force of the springs **54** and **100** until the cam surface **30** of the plug assembly **12** is physically separated from the protrusion **50** of the receptacle assembly **14**.

In FIG. **7**E, the spring **54** has a compressed length e_1, which is less than its relaxed length d_1 in FIG. **7**D. The spring **100** of the contact **24** has a compressed length e_2, which is less than the relaxed length d_2 of the spring **100** shown in FIG. **7**D. While the plug assembly **12** and the receptacle assembly **14** are mechanically disengaged in FIG. **7**E, those assemblies are still in electrical contact by virtue of the physical contact between the electrical contacts **24** and **44**.

FIG. **7**F depicts a schematic view of the plug assembly **12** rotated with respect to the receptacle assembly **14**. To move the plug assembly **12** from the position in FIG. **7**E to the position in FIG. **7**F, an end-user rotates the body **20** of the plug assembly **12** in the counterclockwise direction (see horizontal arrow) while the body **20** is still retained in the downward position against the force of the springs **54** and **100**. The plug assembly **12** is rotated to a position where the protrusion **50** is aligned with the passageway **31** of the plug assembly **12**.

In FIG. **7**F, the spring **54** has a compressed length f_1, which is substantially the same as compressed length e_1 in FIG. **7**E. Additionally, the spring **100** of the contact **24** has a compressed length f_2, which is substantially the same as compressed length e_1 in FIG. **7**E. The assemblies **12** and **14** are still in electrical contact by virtue of the physical contact between the electrical contacts **24** and **44**.

Upon releasing the body **20** of the plug assembly **12** from its position in FIG. **7**F, the plug assembly **12** and the receptacle assembly **14** return to their starting positions depicted in FIG. **7**A, whereby the assemblies **12** and **14** are both mechanically and electrically disengaged. More specifically, the protrusion **50** returns to its initial position within the passageway **31** of the plug assembly **12**. The spring **54** returns to its relaxed stated having a free-state length a_1 and the spring **100** of the electrical contact **24** also returns to its relaxed state having a free-state length a_2. The electrical contacts **24** and **44** of the assemblies **12** and **14**, respectively, return to their initial position separated by a gap a_3.

In the exemplary embodiment of the connector **10** illustrated in FIGS. **1** through **7**F the cam surfaces **30** are defined on the plug assembly **12** and the protrusions **50** are defined on the receptacle assembly **14**. Those skilled in the art will understand that the cam surface **30** may be defined on the receptacle assembly **14** and the protrusions **50** may be defined on the plug assembly **12**, to achieve substantially the same results described herein. Additionally, the resilient electrical contacts may be provided on the receptacle assembly **14** to achieve substantially the same results described herein.

FIG. **8**A depicts a schematic view of a protrusion **106** engaged with a cam surface **108**, according to another exemplary embodiment of the invention. According to this exemplary embodiment, the cam surface **108** is provided in the form of a stepped surface and the protrusion **106** has a polygonal cross-section. As the stepped cam surface **108** moves horizontally to the left or the protrusion **106** moves horizontally to the right, the protrusion **106** slides along the stepped cam surface **108**. Engagement between the protrusion **106** and the stepped cam surface **108**, however, limits horizontal movement of the stepped cam surface **108** to the right and horizontal movement of the protrusion **106** to the left. The protrusion **106** may take any form so long as it includes a pointed surface for engaging the steps of the cam surface **108**. To disengage the protrusion **106** from the cam surface **108**, the cam surface **108** must be translated in the downward direction, similar to the disengagement step shown in FIG. **7**E.

FIG. **8**B depicts a schematic view of a protrusion **107** having a circular cross-section positioned on a cam surface **109**, according to another exemplary embodiment of the invention. The cam surface **109** is similar to the cam surface **30** shown in FIGS. **1**-**7**F, with the exception that the cam surface **109** of FIG. **8**B includes a portion having a constant slope instead of a curvilinear shape. The cam surface may also be toothed or jagged, for example. Those skilled in the art will understand from the description herein that other geometries of the cam surfaces and the protrusions may also be useful to achieve substantially the same result as described in FIGS. **7**A-**7**F.

FIG. **9**A depicts a schematic top plan view of a simplified version of the plug assembly **12** and the receptacle assembly **14** of the connector **10**. As described previously, the receptacle assembly **14** includes four protrusions **50** and the plug assembly **12** includes four passageways **31**, whereby each passageway **31** leads into a cam surface **30**. To join the assemblies **12** and **14** together, a protrusion **50** of the receptacle assembly **14** is inserted through a respective passageway **31** of the plug assembly **12** (or vice versa). According to one aspect of the invention, any one of the protrusions **50** may be inserted through any one of the passageways **31** to engage the assemblies **12** and **14**. Because the plug assembly **12** includes four passageways **31**, the plug assembly **12** may be joined with the receptacle assembly **14** (or vice versa) in four different radial orientations. Each orientation is separated by approximately 90 degrees. Either assembly **12** or assembly **14** is turned less than ¼ of a revolution with respect to the other to mate and seal the assemblies **12** and **14** together. Those skilled in the art will understand that the number of passageways **31** may vary to increase or reduce the number of orientations.

The receptacle assembly **14** includes two rows of concentrically located electrical contacts **44**. The interior row includes the contact **44**(**1**) and the exterior row includes the contacts **44**(**2**) and **44**(**3**). The contact **44**(**1**) is positioned along the central axis of the receptacle assembly **14**. The contacts **44**(**2**) and **44**(**3**) are concentrically positioned about the contact **44**(**1**). While the receptacle assembly **14** includes two rows of electrical contacts, those skilled in the art will understand from the description herein that the receptacle assembly **14** may include any number of concentrically located electrical contacts **44**.

The plug assembly **12** includes nine contacts **24**(**1**) through **24**(**9**) that are all positioned relative to the central axis of the plug assembly **12**. The contacts **24**(**1**), **24**(**2**) and **24**(**3**) are positioned proximal to the central axis of the plug assembly **12**, whereas the contacts **24**(**4**) through **24**(**9**) are positioned distal to the central axis. The contacts **24**(**4**) through **24**(**9**) are positioned substantially equidistant to the central axis. Those skilled in the art will understand from the description herein that the plug assembly **12** may have any number of electrical contacts.

Regardless of the relative radial orientations of the assemblies **12** and **14**, the contacts **24**(**1**), **24**(**2**) and **24**(**3**) of the plug assembly are always positioned to engage the contact **44**(**1**) of the receptacle assembly **14** to transfer power, ground or signals therebetween. Depending upon the relative radial orientations of the assemblies **12** and **14**, however, the contacts **24**(**4**) through **24**(**9**) may be positioned to engage either contact **44**(**2**) or contact **44**(**3**) to transfer power, ground or signals therebetween.

FIG. **9**B depicts a schematic top plan view of a simplified version of a plug assembly **112** and a receptacle assembly **114** of a connector **110**, according to another exemplary embodiment of the invention. The assemblies **112** and **114** are substantially similar to assemblies **12** and **14**, with three exceptions: (a) the receptacle assembly **114** includes five electrical contacts **144**, (b) two passageways **131** are formed on the body **120** of the plug assembly **112**, and (c) two protrusions **150** extend from the body **140** of the receptacle assembly **114**. The arrangement of the electrical contacts **124**(**1**) through **124**(**9**) does not differ from that of the plug assembly **12**.

The plug assembly **112** includes two passageways **131** that are radially separated by approximately 180 degrees.

Although not shown, the plug assembly **112** includes two cam surfaces, wherein each cam surface extends from a passageway **131**. The plug assembly **112** may be joined with the receptacle assembly **114** (or vice versa) in two different radial orientations, each separated by approximately 180 degrees. In use, either assembly **112** or assembly **114** is turned less than ½ of a revolution with respect to the other to mate and seal the assemblies **112** and **114** together.

Regardless of the relative radial orientations of the assemblies **112** and **114**, the contacts **124(1)**, **124(2)** and **124(3)** of the plug assembly **112** are always positioned to engage the contact **144(1)** of the receptacle assembly **114**. In a first orientation of the assemblies **112** and **114**, the contacts **124(4)** and **124(5)** of the plug assembly **112** are positioned to engage the contact **144(4)** of the receptacle assembly **114**, the contact **124(6)** of the plug assembly **112** is positioned to engage the contact **144(3)** of the receptacle assembly **114**, the contacts **124(7)** and **124(8)** of the plug assembly **112** are positioned to engage the contact **144(2)** of the receptacle assembly **114**, and the contact **124(9)** of the plug assembly **112** is positioned to engage the contact **144(5)** of the receptacle assembly **114**. In a second orientation of the assemblies **112** and **114**, the contacts **124(4)** and **124(5)** of the plug assembly **112** are positioned to engage the contact **144(2)** of the receptacle assembly **114**, the contact **124(6)** of the plug assembly **112** is positioned to engage the contact **144(5)** of the receptacle assembly **114**, the contacts **124(7)** and **124(8)** of the plug assembly **112** are positioned to engage the contact **144(4)** of the receptacle assembly **114**, and the contact **124(9)** of the plug assembly **112** is positioned to engage the contact **144(3)** of the receptacle assembly **114**. It should be understood that the first orientation is radially separated from the second orientation by approximately 180 degrees.

According to one exemplary use of the invention, power is transmitted through the contacts **124(1)**, **124(2)** and **124(3)**; signals are transmitted to the contacts **124(6)** and **124(9)**; and contacts **124(4)**, **124(5)**, **124(7)** and **124(8)** of the plug assembly **112** are connected to a ground potential. Regardless of the relative radial orientation of the assemblies **112** and **114**, power is transmitted to the contact **144(1)** of the receptacle assembly **114**. In both radial orientations of the assemblies **112** and **114**, the contacts **144(2)** and **144(4)** are connected to a ground potential. In both radial orientations of the assemblies **112** and **114**, the contacts **144(3)** and **144(5)** receive the signals. Thus, neither radial orientation is functionally different from the other. The connector **110** depicted in FIG. **9**B may be particularly useful in a helmet-mounted night-vision system, as described in greater detail with reference to FIGS. **10-13**.

FIG. **10** depicts the plug assembly **112** of FIG. **9**B mounted to a battery pack **300**. The battery pack **300** forms part of a helmet-mounted night-vision system. The battery pack **300** includes an interior region that houses one or more batteries (not shown). The batteries are electrically connected to the plug assembly **112**. Further details of the battery pack **300** are disclosed in U.S. patent application Ser. No. 12/277,750, which is incorporated by reference herein in its entirety.

FIG. **11** depicts the receptacle assembly **114** of FIG. **9**B mounted to a helmet **310** incorporating a night vision device **320**. Although not shown, the helmet **310** includes provisions for mounting the night vision device **320** thereto. Helmet-mounted night vision devices are disclosed, for example, in U.S. Pat. Nos. 7,211,778, 7,049,027, 6,938,276, 6,662,370, and 5,683,831, 4,666,276, 4,329,735, for example, which are incorporated by reference herein in their entirety. The receptacle assembly **114** is fixedly mounted to a plate **322** that is mounted to the helmet **310**. The plate **322** is mounted to the rear or side of the helmet **310**. The electrical contacts **144** of the receptacle assembly **114** are electrically connected to a shielded cable **324**. The shielded cable **324** is also connected to the night vision device **320** for transmitting power from the batteries of the battery pack **300** to the night vision device **320**.

FIG. **12** depicts an initial step of installing the plug assembly **112** of the battery pack **300** onto the receptacle assembly **114** of the helmet **310**. FIG. **13** depicts the step of rotating the battery pack **300** with respect to the helmet **310** to connect the plug assembly **112** with the receptacle assembly **114** and lock the battery pack **300** to the helmet **310**.

According to one method of assembling the battery pack **300** onto the helmet **310**, the user first grasps the rectangular battery pack **300** along its narrow portion (see FIG. **10**) and brings the plug assembly **112** of the battery pack **300** in close proximity to the receptacle assembly **114** of the helmet **310**. The user then rotates the entire battery pack **300** until the passageways **131** of the plug assembly **112** are aligned with protrusions **150** of the receptacle assembly **114** (corresponding to the position FIG. **7**A). The plug assembly **112** of the battery pack **300** has two possible orientations for engagement with receptacle assembly **114** of the helmet **310** that are spaced apart by 180 degrees. Upon alignment between the passageways **131** and the protrusions **150**, the user pushes the battery pack **300** further toward against the force of the spring **54** of the receptacle assembly **114** (see FIG. **4**). As shown in FIG. **13**, the user then rotates the battery pack **300** (see arrow) with respect to the helmet **310** until the protrusions **150** are seated within their respective recesses **53** (corresponding to the motion depicted in FIGS. **7**B-**7**D). A connection is thus formed between the battery pack **300** and the night vision device **320** in FIG. **13**.

As mentioned previously, neither radial orientation of the assemblies **112** and **114** is functionally different from the other. Accordingly, the user may attach the battery pack **300** in an intuitive motion without looking or otherwise identifying a specific "up or down" position of the battery pack **300**. The connector **110** is generally intuitive, familiar, and ergonomic for the end-user. The connector **110** facilitates removal or installation of the battery pack **300** quickly and easily because the battery pack **300** is naturally oriented as an effect of the normal reach of the user's hand.

Referring now to FIGS. **9**B and **13**, the electrical contacts **144(3)**, **144(5)**, **124(6)** and **124(9)** distribute signals between the battery pack **300** and the night vision device **320**. Signals are transmitted from the night vision device **320** to the battery pack **300** to either activate or deactivate the battery pack **300** depending upon the whether the night vision device **320** is in active use by an end-user.

More particularly, in operation, once the user moves the night vision device **320** to a deployed position (i.e., within his or her line of sight), the night vision device **320** transmits a signal to the battery pack **300** (via electrical contacts **144(3)**, **144(5)**, **124(6)** and **124(9)**) to activate the battery pack **300**. Once the user moves the night vision device **320** to a stowed position (i.e., out of his or her line of sight), the night vision device **320** transmits a signal to the battery pack **300** (via electrical contacts **144(3)**, **144(5)**, **124(6)** and **124(9)**) to deactivate the battery pack **300**. The signals that are transmitted between those electrical contacts are indistinguishable, thus, regardless of whether the contacts **144(3)** and **144(5)** of the receptacle assembly **114** are mated with the contacts **124(6)** and **124(9)** of the plug assembly **112**, respectively, or vice versa, the proper signals reach the battery pack **300**.

By way of non-limiting example the connectors described herein, or modified versions thereof, may be used in the

following applications: combat ground troops, ground support personnel, fixed wing aviation, rotary aircraft aviation, aviation ground support personnel, vehicle transport (utility), vehicle transport (armor), security, military, law enforcement (police or SWAT), boating (navigation), commercial fisherman (navigation), commercial maintenance, virtual reality entertainment, virtual reality training or medical equipment.

Although the invention is illustrated and described herein with reference to specific embodiments, the invention is not intended to be limited to the details shown. Rather, various modifications may be made in the details within the scope and range of equivalents of the claims and without departing from the spirit of the invention. For example, the connector described herein may be utilized with a night vision goggle, however, it will be understood that the invention can be used with other electronic devices or sighting devices, such as a monocular or binoculars, cameras, helmet mounted display screen, head-up display or any other helmet mounted optical, electro-optical, and/or viewing devices.

What is claimed:

1. An electrical connector for a helmet-mounted optical system comprising:

either a receptacle assembly or a plug assembly that is configured to be mechanically coupled either directly or indirectly to a helmet and electrically coupled to optical device that is mounted to the helmet; and

the other of the plug assembly and the receptacle assembly is configured to be mechanically and electrically coupled to a battery pack,

wherein each assembly includes a body having a rounded surface and at least one electrical contact positioned within the body,

wherein a protrusion extends from the rounded surface of either the plug assembly or the receptacle assembly and at least two slots are defined along the rounded surface of the other of the plug assembly and the receptacle assembly and each slot is sized to receive the protrusion,

wherein the plug assembly and the receptacle assembly are configured to be releasably mated together in at least two different orientations by inserting the protrusion into one of the slots and rotating either the plug assembly or the receptacle assembly to releasably mount the battery pack to the helmet and establish an electrical connection between the at least one electrical contact of the plug assembly and the at least one electrical contact of the receptacle assembly.

2. The electrical connector of claim **1**, wherein the at least two orientations are radially separated from each other.

3. The electrical connector of claim **2**, wherein the at least two orientations are radially separated from each other by at least ninety degrees.

4. The electrical connector of claim **1**, wherein the receptacle connector and the plug connector are configured to be releasably mated together in at least three different orientations.

5. The electrical connector of claim **1** wherein the slot includes a cam surface defined along the rounded surface of the other of the plug assembly and the receptacle assembly.

6. The electrical connector of claim **5**, wherein upon engagement between the plug assembly and the receptacle assembly, the protrusion is positioned within one of the slots, the rounded surfaces of the assemblies are positioned to face each other, and, upon rotation of the assemblies with respect to one another, the protrusion is positioned along the cam surface causing the at least one electrical contact of the plug assembly to bear against the at least one electrical contact of the receptacle assembly thereby establishing an electrical connection between the plug assembly and the receptacle assembly.

7. The electrical connector of claim **6**, wherein the cam surface defines a recess that is sized to receive the protrusion, and upon further rotation of the assemblies with respect to one another the protrusion seats within the recess of the cam surface.

8. The electrical connector of claim **6** further comprising a spring positioned between the plug and the receptacle to bias the protrusion in a direction toward the recess of the cam surface or bias the recess of the cam surface in a direction toward the protrusion.

9. The electrical connector of claim **6** further comprising a plurality of protrusions spaced apart along the circumference of the rounded surface of either the plug assembly or the receptacle assembly.

10. The electrical connector of claim **1**, wherein the protrusion extends radially inwardly toward a longitudinal axis of either the plug assembly or the receptacle assembly.

11. A helmet-mounted night vision assembly comprising:

a helmet including provisions for mounting a night vision device thereto;

a receptacle assembly mounted to the helmet;

a battery pack configured to contain at least one battery, said battery pack including a plug assembly mounted to a surface of the battery pack;

the plug assembly and the receptacle assembly each including a body having a revolved surface and at least one electrical contact positioned within the body; and

a protrusion extending from the revolved surface of either the plug assembly or the receptacle assembly and a cam surface defined along the revolved surface of the other of the plug assembly and the receptacle assembly,

wherein the plug assembly and the receptacle assembly are configured to be releasably mated together in at least two different orientations for releasably mounting the battery pack to the helmet and supplying power from the battery of the battery pack to a night vision device that is mounted to the helmet.

12. The helmet-mounted night vision assembly of claim **11**, wherein the receptacle assembly is not mounted to the front of the helmet.

13. The helmet-mounted night vision assembly of claim **11** further comprising a night vision device mounted to the helmet.

14. The helmet-mounted night vision assembly of claim **11**, wherein the at least two orientations are radially separated from each other.

15. The helmet-mounted night vision assembly of claim **14**, wherein the at least two orientations are radially separated from each other by at least ninety degrees.

16. The helmet-mounted night vision assembly of claim **11**, wherein upon engagement between the plug assembly and the receptacle assembly the revolved surfaces of the assemblies are positioned to face each other and upon rotation of the assemblies with respect to one another the protrusion is positioned to move along the cam surface causing the at least one electrical contact of the plug assembly to bear against the at least one electrical contact of the receptacle assembly thereby establishing an electrical connection between the plug assembly and the receptacle assembly.

17. An electrical connector for a helmet-mounted night vision system comprising:

a receptacle assembly that is configured to be mechanically coupled either directly or indirectly to a helmet and electrically coupled to a night vision device that is mounted to the helmet;

a plug assembly that is configured to be mechanically and electrically coupled to a battery pack, wherein the plug assembly and the receptacle assembly are configured to be releasably mated together in at least two different orientations for releasably mounting the battery pack to the helmet and supplying power from the battery pack to a night vision device that is mounted to the helmet, wherein each assembly includes a body having a revolved surface and at least one electrical contact positioned within the body; and

a protrusion extending from the revolved surface of either the plug assembly or the receptacle assembly and a cam surface defined along the revolved surface of the other of the plug assembly and the receptacle assembly.

* * * * *